Mountlake Terrace City Council
Work Session Agenda
Thursday, May 28, 2026, 7:00 PM
City Hall and via Telephone or Teleconference

AGENDA

1. Call to Order
2. Attendance Roll Call
3. General Public Comment
4. Presentation on POLCO Community Satisfaction Survey
5. Presentation on Community Branding Update
6. Presentation on 1st Quarter Financial Update
7. Review Bid Award for Westside Water Main Phase II
8. Review Perteet Agreement Supplement 7 for Main St Phase 2 and 3 Construction Management
9. Review Ordinance Adopting McLeod Telecommunications Franchise Agreement
10. Review Bid Award for Pedestrian Plaza (Transit Connection Corridor) Project
11. Review Consor Construction Management Agreement for Pedestrian Plaza (Transit Connection Corridor) Project
12. City Manager's Report
13. Review June 4, 2026 Meeting Agenda
14. Council Comments
15. Adjournment

To listen to the meeting via telephone, call 1-253-215-8782. To watch the meeting online: 1) Go to https://zoom.us/join; 2) Enter meeting ID 810 1113 9518 and click "join." No passcode needed.

To provide public comment or testimony remotely (via Zoom or telephone), please refer to the Public Comment and Public Hearing Testimony Protocol on the city website

https://www.cityofmlt.com/129/Agendas-and-Minutes.

To submit written public comment or hearing testimony, mail to/drop off at City Hall (23204 58th Avenue W., Mountlake Terrace, WA 98043) or email remarks to Jennifer Joki, jjoki@mltwa.gov, no later than 4 p.m. on the public hearing date.

No person shall make personal attacks or threatening remarks while addressing the Council which disrupts, disturbs, or otherwise impedes the orderly conduct of the meeting. All hate speech will be construed as threatening remarks.

Polco

THE NCS™

THE NATIONAL COMMUNITY SURVEY™

Mountlake Terrace, WA

The National Community Survey™

2026 Results

Polco

Civic Communication & Analytics Platform

Polco unites people, data, and government to help communities thrive through informed decisions.

NRC
POWERED BY POLCO

Advanced Survey Science and Performance Analytics

Polco's internal think tank, backed by 30 years of benchmark survey expertise, delivering trusted insights.

BalancingAct
FROM POLCO

Trusted Budget Tools

Provides budget insights through interactive simulations and transparent insights.

THE NCS™ THE NATIONAL COMMUNITY SURVEY™

THE NES™ THE NATIONAL EMPLOYEE SURVEY™

THE NBS™ THE NATIONAL BUSINESS SURVEY™

CASOA® COMMUNITY ASSESSMENT SURVEY FOR OLDER ADULTS®

THE NLES THE NATIONAL LAW ENFORCEMENT SURVEY

polco.us

Facets of Community Livability

THE NCS™

THE NATIONAL COMMUNITY SURVEY™

The National Community Survey™ in Mountlake Terrace

Address-based
Random sample survey

Survey open **February 5th, 2026** to **March 31st, 2026**

Invitations mailed to **3,500** households

448 responses received
4.6% Margin of error

Results weighted to reflect Mountlake Terrace

Community-wide open participation survey received **32** total responses.

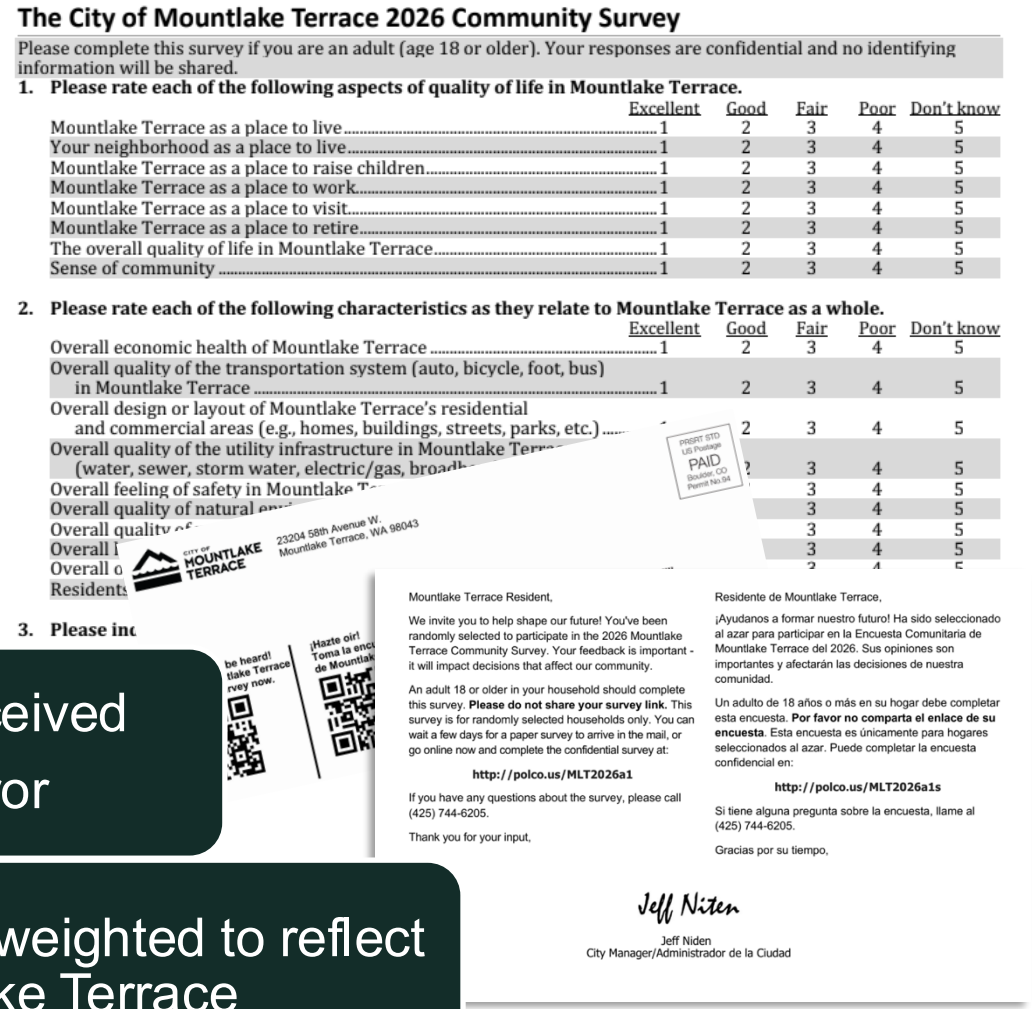

The City of Mountlake Terrace 2026 Community Survey

Please complete this survey if you are an adult (age 18 or older). Your responses are confidential and no identifying information will be shared.

1. **Please rate each of the following aspects of quality of life in Mountlake Terrace.**

	Excellent	Good	Fair	Poor	Don't know
Mountlake Terrace as a place to live	1	2	3	4	5
Your neighborhood as a place to live	1	2	3	4	5
Mountlake Terrace as a place to raise children	1	2	3	4	5
Mountlake Terrace as a place to work	1	2	3	4	5
Mountlake Terrace as a place to visit	1	2	3	4	5
Mountlake Terrace as a place to retire	1	2	3	4	5
The overall quality of life in Mountlake Terrace	1	2	3	4	5
Sense of community	1	2	3	4	5

2. **Please rate each of the following characteristics as they relate to Mountlake Terrace as a whole.**

	Excellent	Good	Fair	Poor	Don't know
Overall economic health of Mountlake Terrace	1	2	3	4	5
Overall quality of the transportation system (auto, bicycle, foot, bus) in Mountlake Terrace	1	2	3	4	5
Overall design or layout of Mountlake Terrace's residential and commercial areas (e.g., homes, buildings, streets, parks, etc.)		2	3	4	5
Overall quality of the utility infrastructure in Mountlake Terr (water, sewer, storm water, electric/gas, broadb			3	4	5
Overall feeling of safety in Mountlake T			3	4	5
Overall quality of natural env			3	4	5
Overall quality of			3	4	5
Overall I			3	4	5
Overall c					
Residents					

3. **Please inc**

PRSRT STD US Postage PAID Boulder, CO Permit No 94

CITY OF MOUNTLAKE TERRACE 23204 58th Avenue W. Mountlake Terrace, WA 98043

be heard! lake Terrace rvey now.

¡Hazte oír! Toma la enc de Mountlak

Mountlake Terrace Resident,

We invite you to help shape our future! You've been randomly selected to participate in the 2026 Mountlake Terrace Community Survey. Your feedback is important - it will impact decisions that affect our community.

An adult 18 or older in your household should complete this survey. **Please do not share your survey link.** This survey is for randomly selected households only. You can wait a few days for a paper survey to arrive in the mail, or go online now and complete the confidential survey at:

http://polco.us/MLT2026a1

If you have any questions about the survey, please call (425) 744-6205.

Thank you for your input,

Residente de Mountlake Terrace,

¡Ayudanos a formar nuestro futuro! Ha sido seleccionado al azar para participar en la Encuesta Comunitaria de Mountlake Terrace del 2026. Sus opiniones son importantes y afectarán las decisiones de nuestra comunidad.

Un adulto de 18 años o más en su hogar debe completar esta encuesta. **Por favor no comparta el enlace de su encuesta**. Esta encuesta es únicamente para hogares seleccionados al azar. Puede completar la encuesta confidencial en:

http://polco.us/MLT2026a1s

Si tiene alguna pregunta sobre la encuesta, llame al (425) 744-6205.

Gracias por su tiempo,

Jeff Niten

Jeff Niden
City Manager/Administrador de la Ciudad

Polco's Benchmarking Database

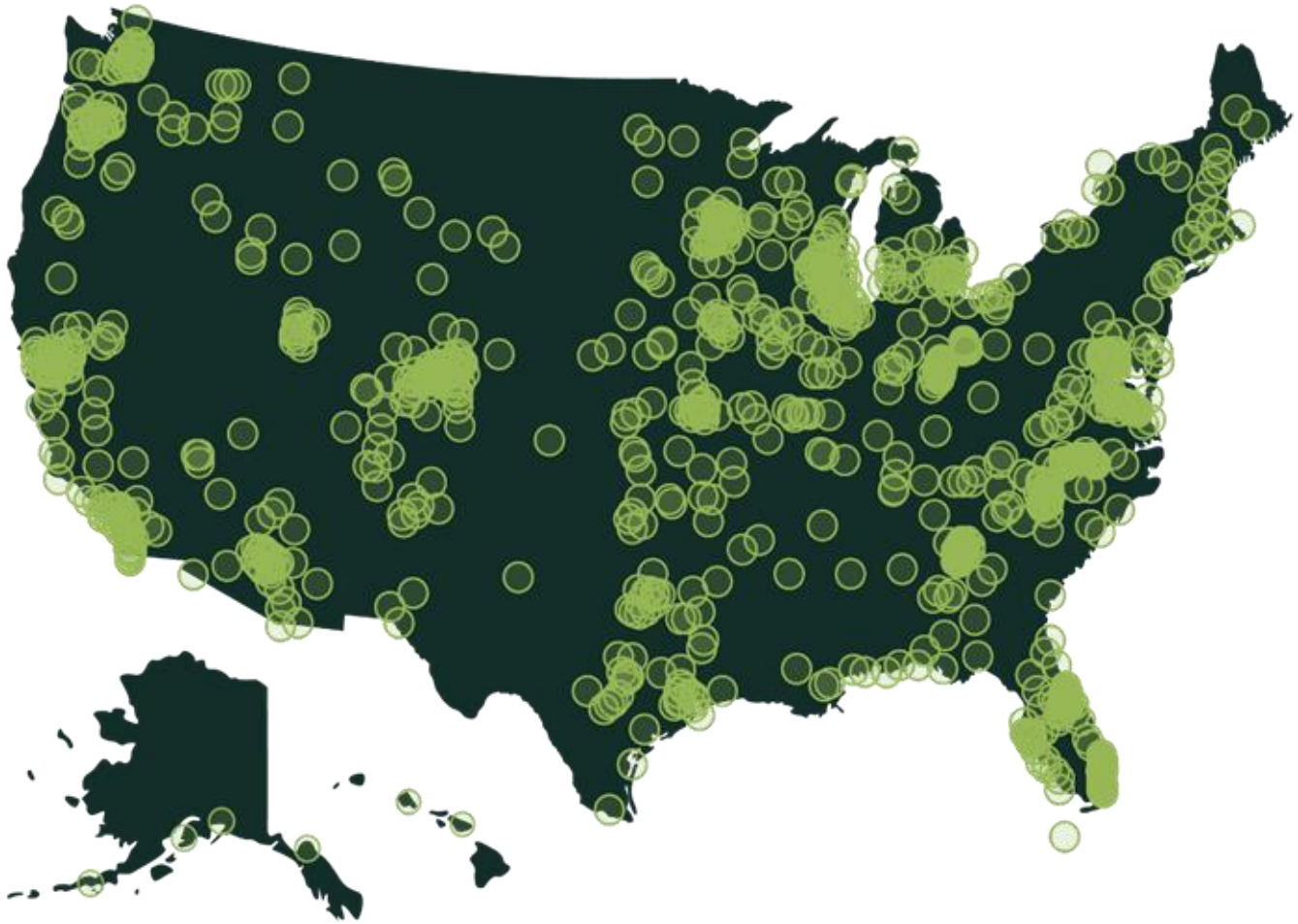

About **400** comparison communities across the nation.

Representing the opinions of more than **50 million** residents.

Overview of Survey Results

Facets of Community Livability: **Quality**

National Benchmark

- **Higher**
- **Similar**
- **Lower**

2026 vs 2024:

Increasing

Custom Benchmark

Higher than

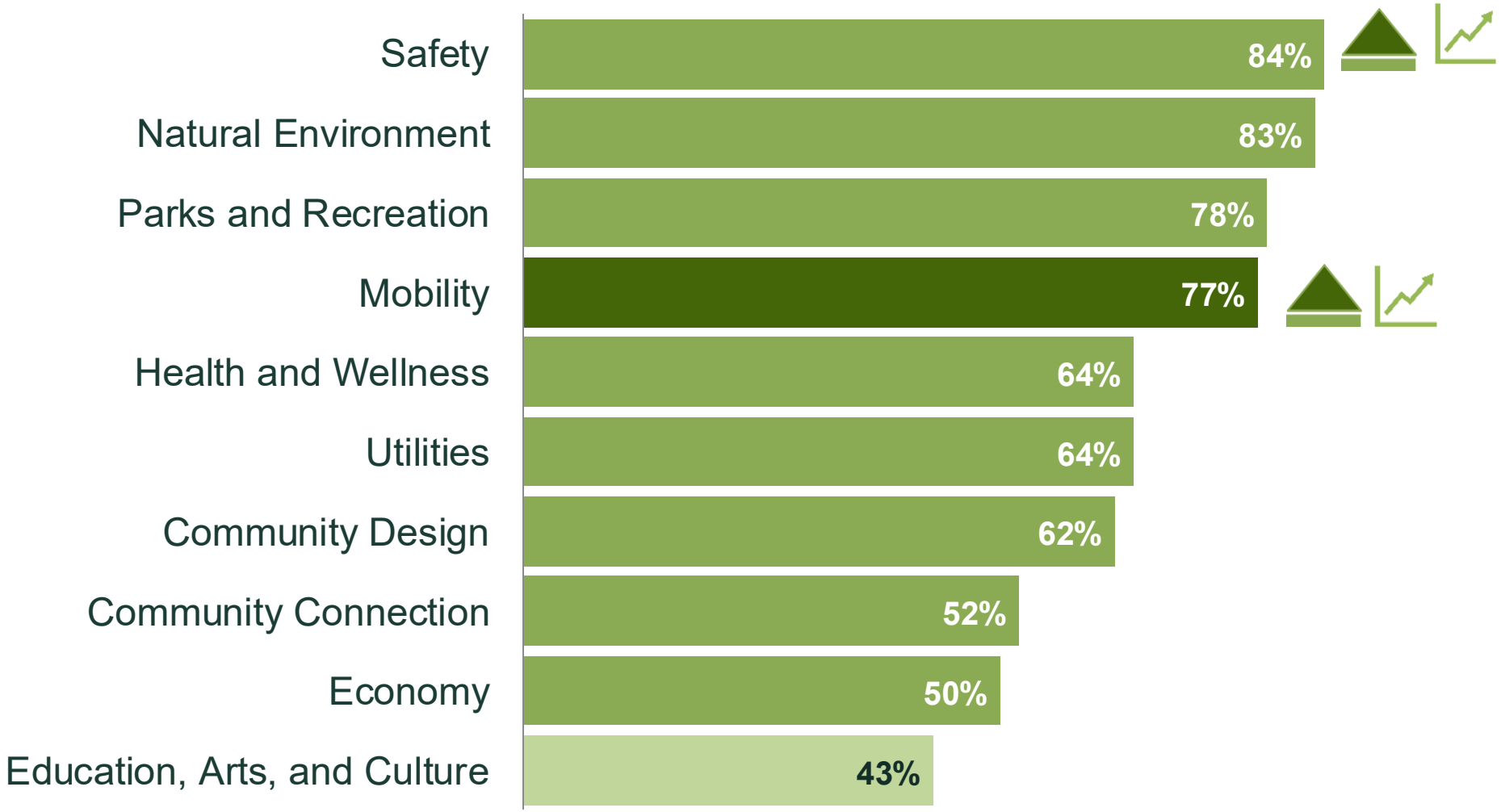

Facets of Community Livability: **Importance**

National Benchmark

Similar

Lower

2026 vs 2024:

Decreasing

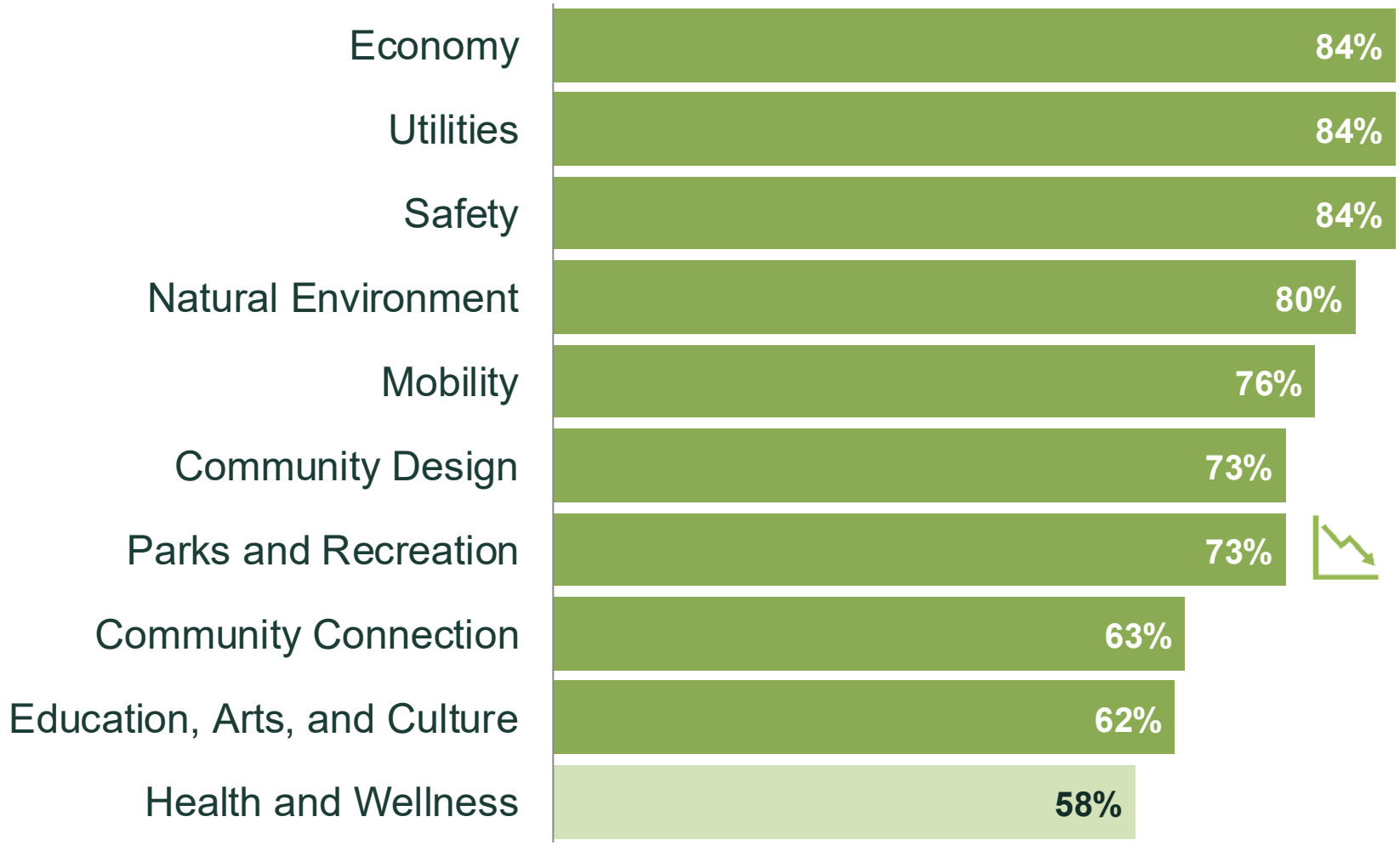

Percent essential or very important

Balancing Quality and Importance

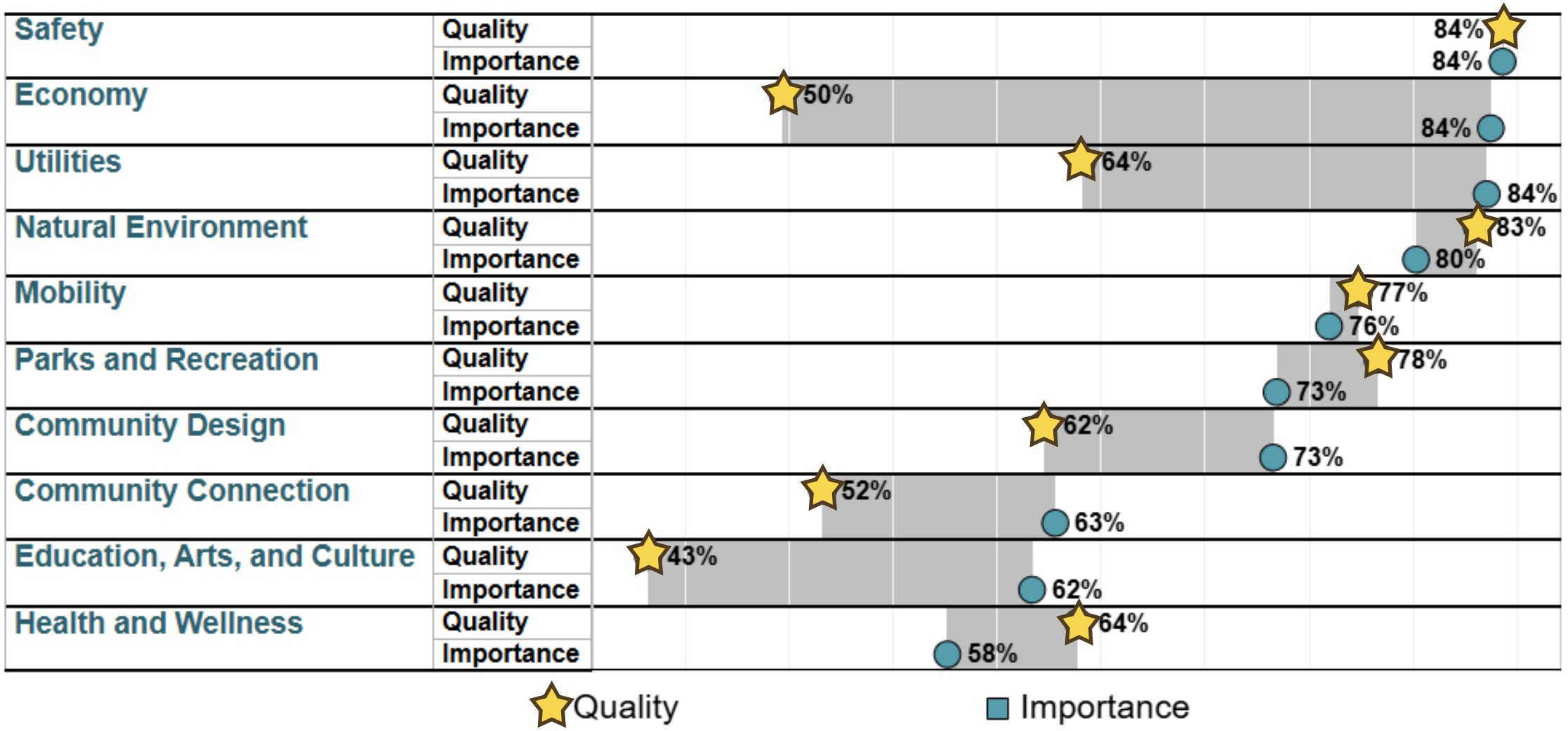

Comparisons to National Benchmarks

7 received **higher** ratings

107 received **similar** ratings

9 received **lower** ratings

Comparisons to Custom Benchmarks

18 received **higher** ratings

102 received **similar** ratings

3 received **lower** ratings

Comparisons to Previous Survey (2024)

23 received **higher** ratings

96 received **similar** ratings

4 received **lower** ratings

Key Findings

Residents rate Mountlake Terrace highly as a place to live.

1

Overall Community Quality

National Benchmark

Similar

Residents gave **excellent** or **good** ratings to:

9 in 10 Mountlake Terrace as a place to live.

8 in 10 Mountlake Terrace as a place to raise children.

8 in 10 The overall quality of life

8 in 10 plan to remain in Mountlake Terrace for the next five years

88% would recommend living in Mountlake Terrace to someone who asked

Residents express growing confidence in City governance.

2

Governance in Mountlake Terrace

Please rate the following categories of Mountlake Terrace government performance.

National Benchmark

Similar

2026 vs 2024:

Increasing

Custom Benchmark

Higher than

3

Residents feel safe in the community.

Safety in Mountlake Terrace

National Benchmark

Similar

2026 vs 2024:

Increasing

Please rate how safe or unsafe you feel:

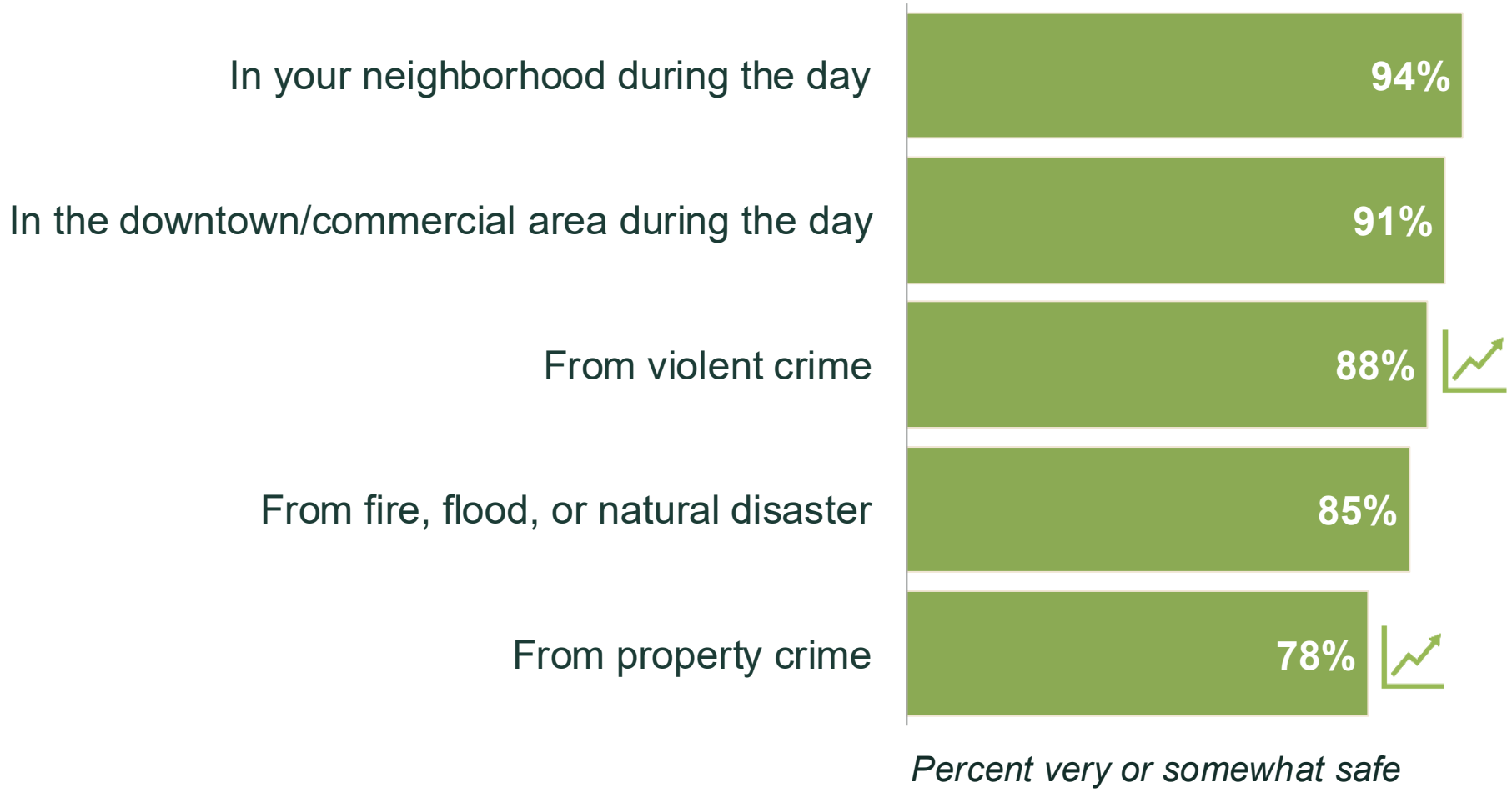

Safety Services in Mountlake Terrace

National Benchmark

Similar

2026 vs 2024:

Increasing

Please rate the quality of the following services in Mountlake Terrace.

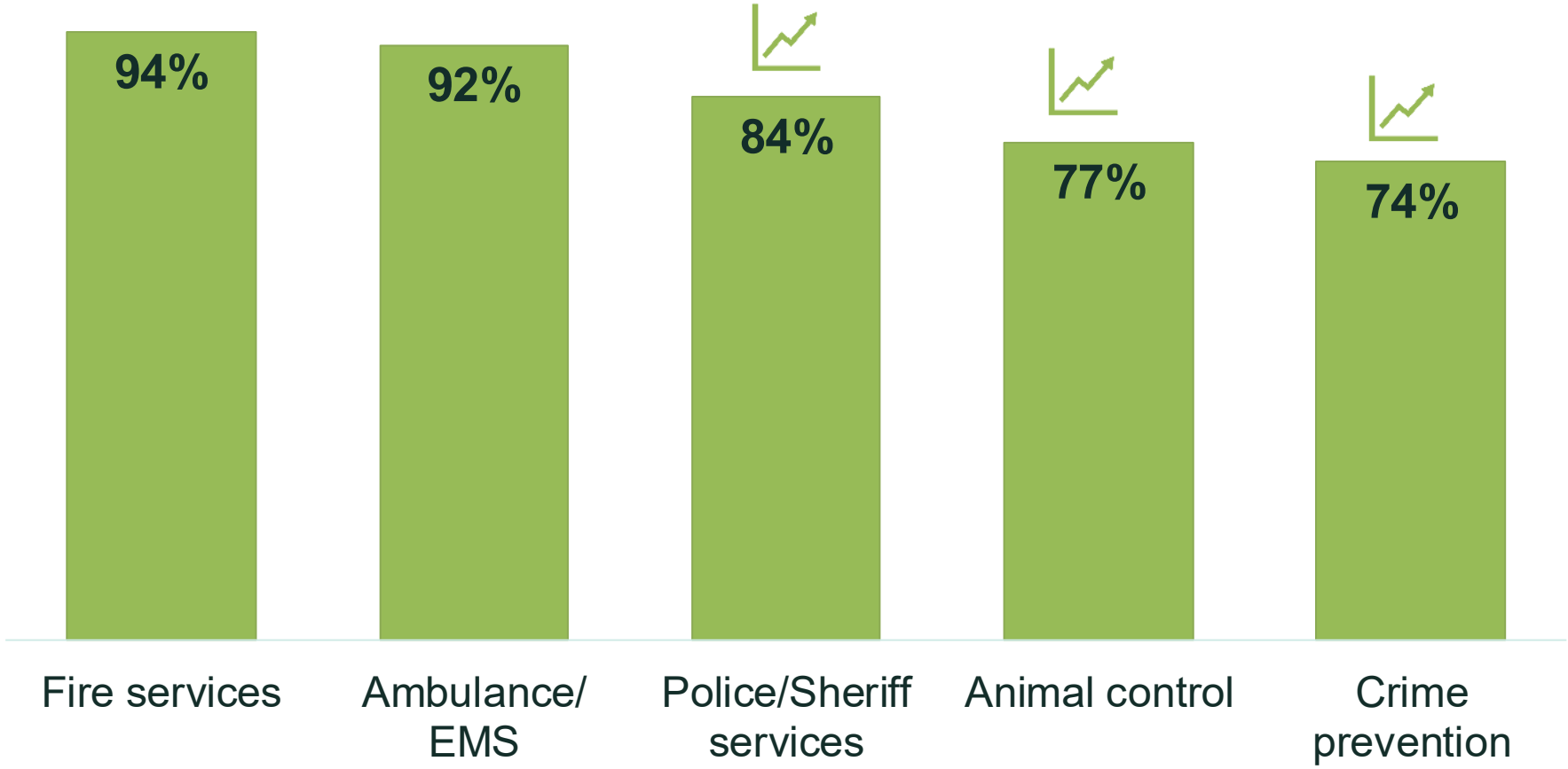

Percent excellent or good

4

The local economy and commercial environment received lower ratings.

The Economy in Mountlake Terrace

Please rate each of the following in the Mountlake Terrace community:

National Benchmark

- **Similar**
- **Lower**

Custom Benchmark

Lower than

Affordability in Mountlake Terrace

Please rate each of the following in the Mountlake Terrace community:

National Benchmark

Similar

2026 vs 2024:

Increasing

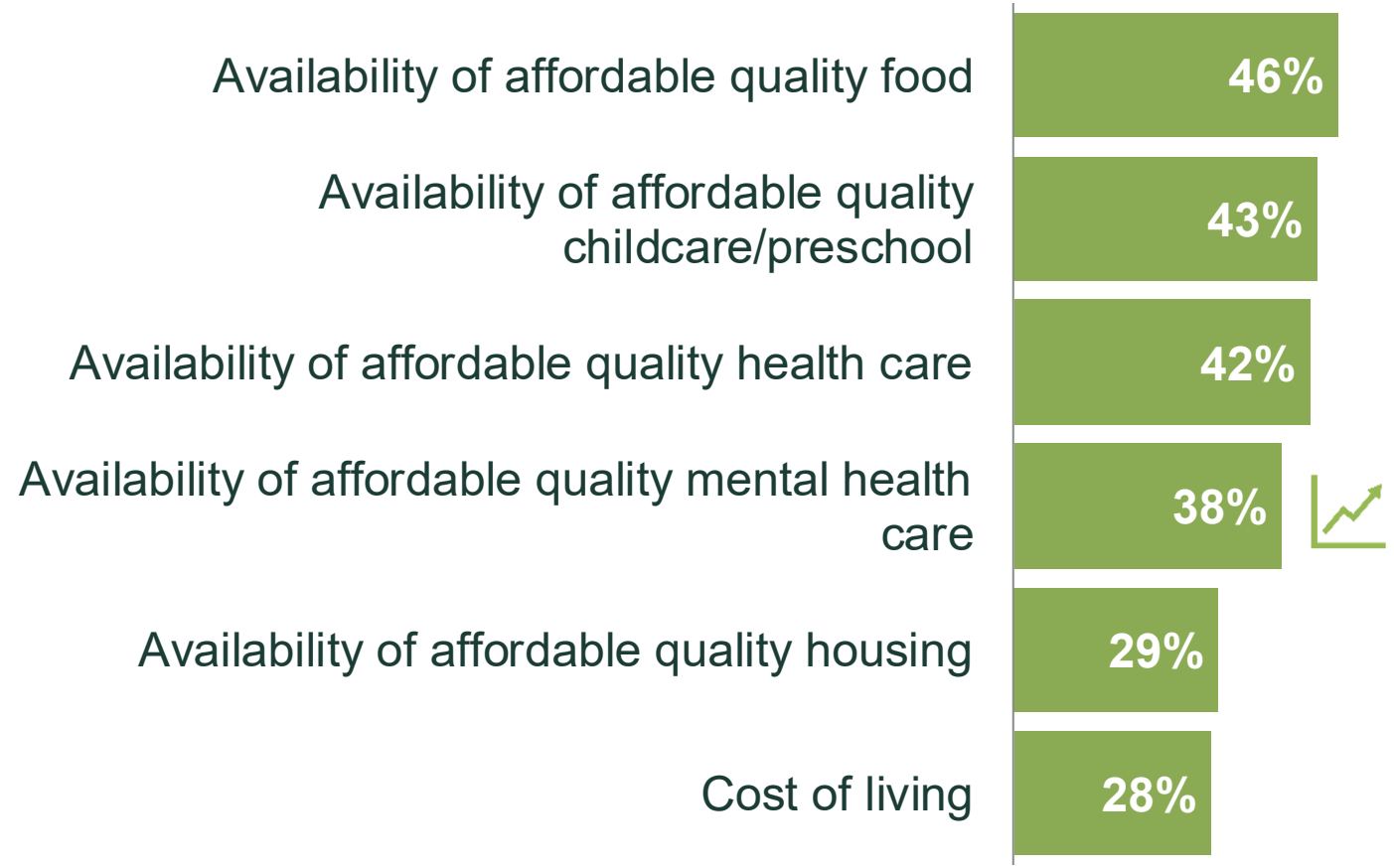

Percent excellent or good

Residents' experience with housing and community design are on par with peers

5

Community Design in Mountlake Terrace

National Benchmark

Similar

2026 vs 2024:

Increasing

Please rate each of the following in the Mountlake Terrace community:

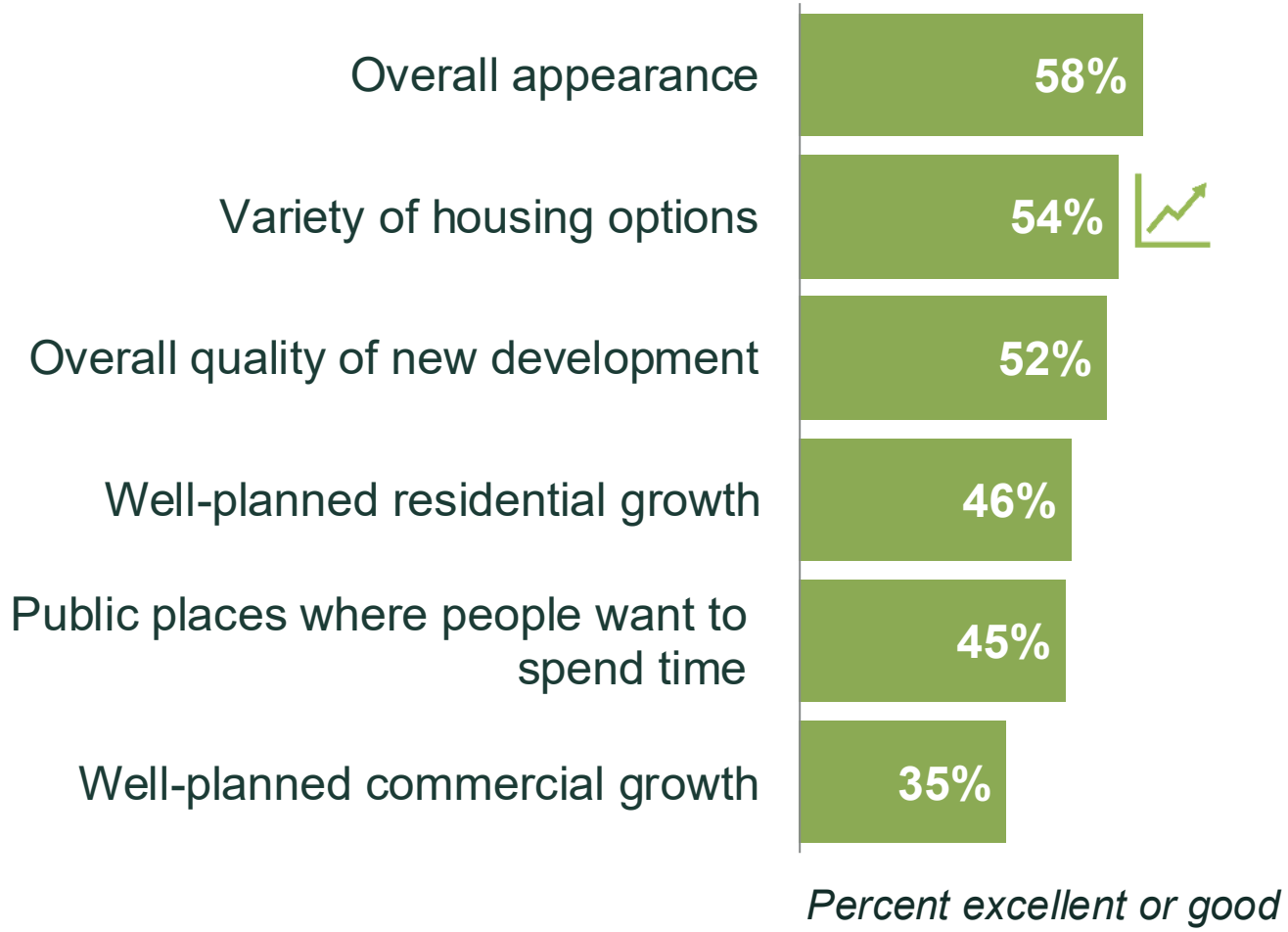

6

Mobility is a clear strength.

Mobility in Mountlake Terrace

Please rate each of the following in the Mountlake Terrace community:

National Benchmark

- **Higher**
- **Similar**

2026 vs 2024:

Increasing

Custom Benchmark

Higher than

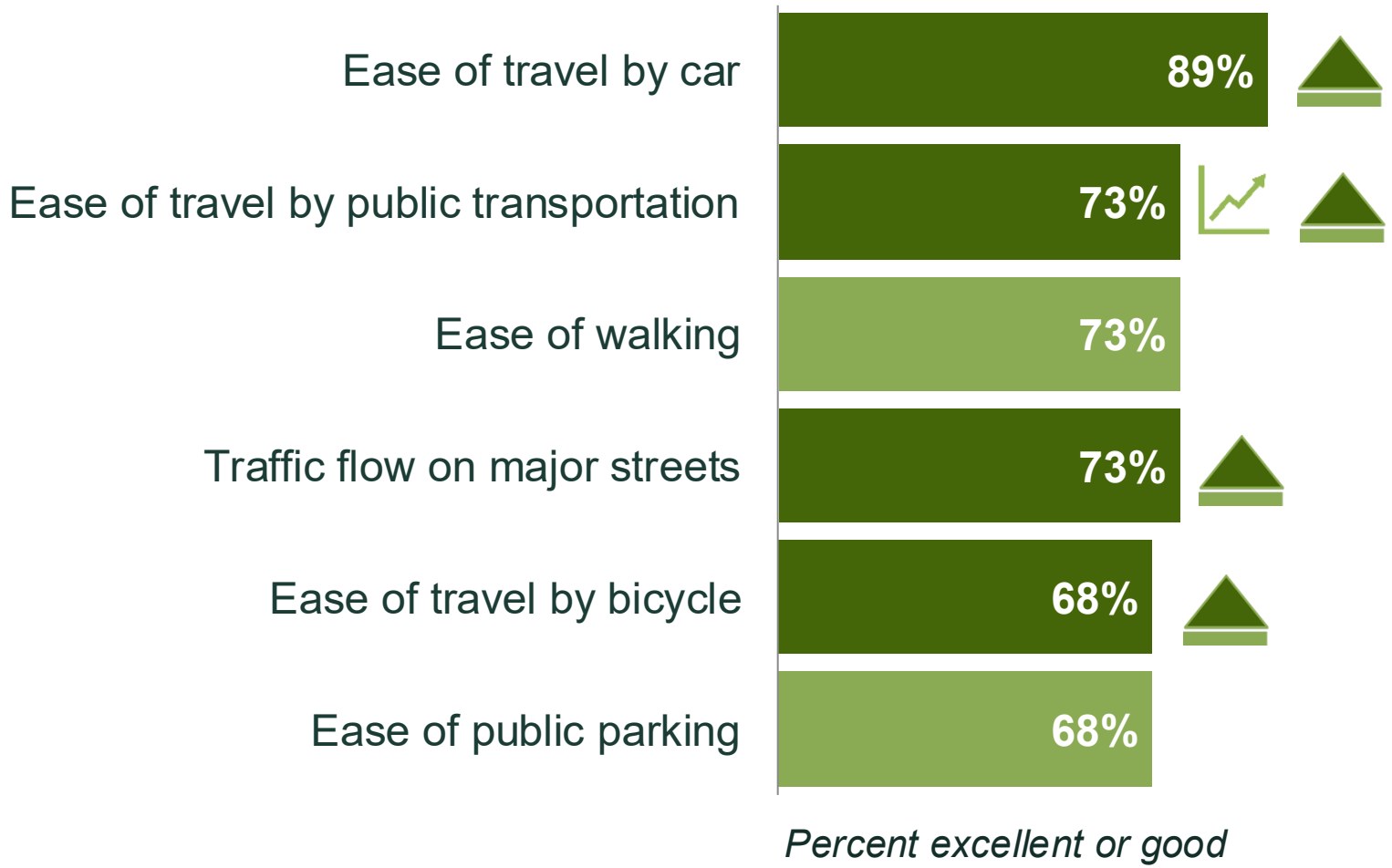

Mobility Services in Mountlake Terrace

Please rate each of the following in the Mountlake Terrace community:

National Benchmark

- **Higher**
- **Similar**

2026 vs 2024:

Increasing

Custom Benchmark

Higher than

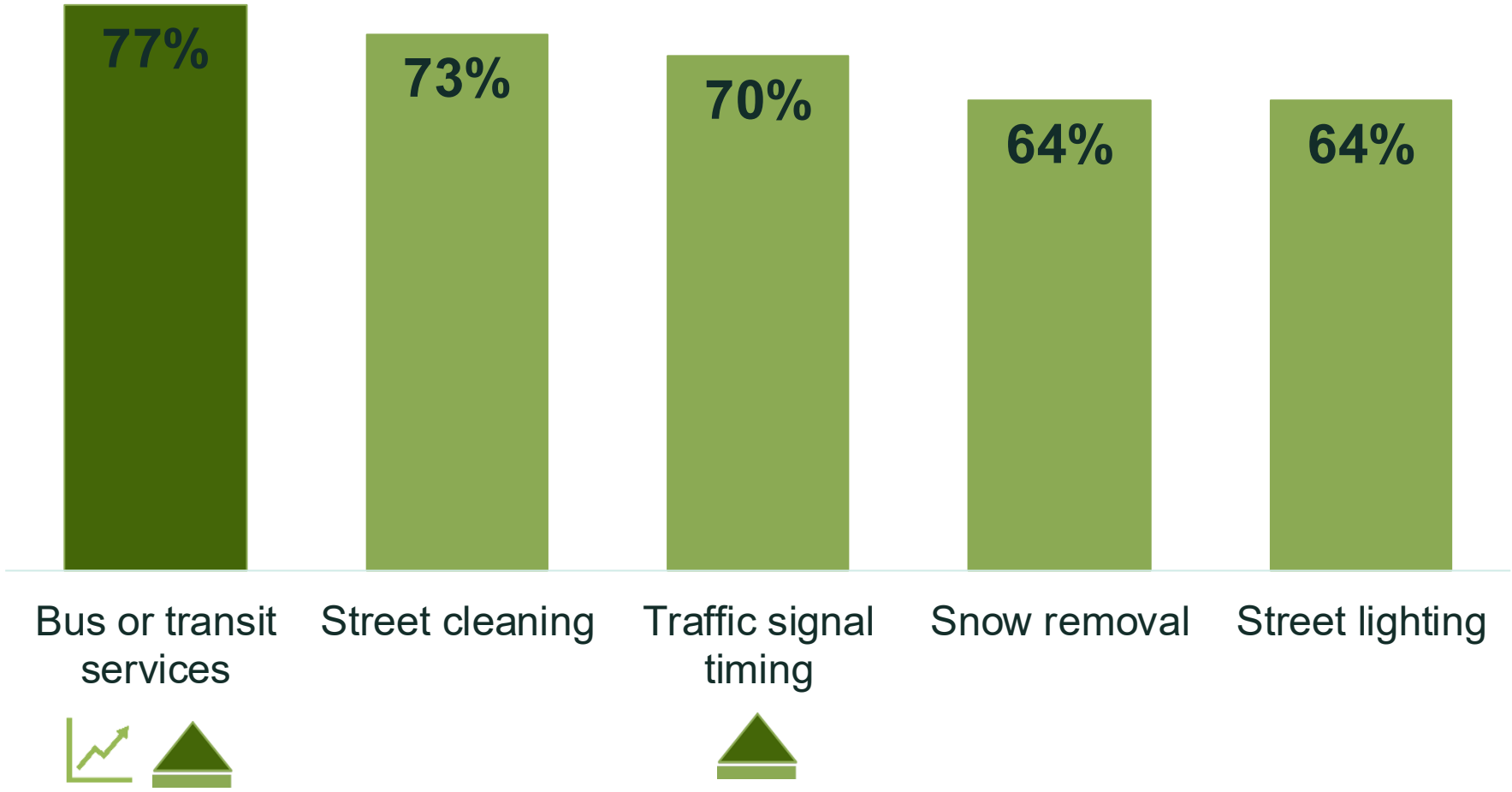

Arts, culture, and community activity ratings may point to growth opportunities.

7

Education, Arts, and Culture in Mountlake Terrace

National Benchmark

- **Similar**
- **Lower**

2026 vs 2024:

Increasing/Decreasing

Please rate each of the following in the Mountlake Terrace community:

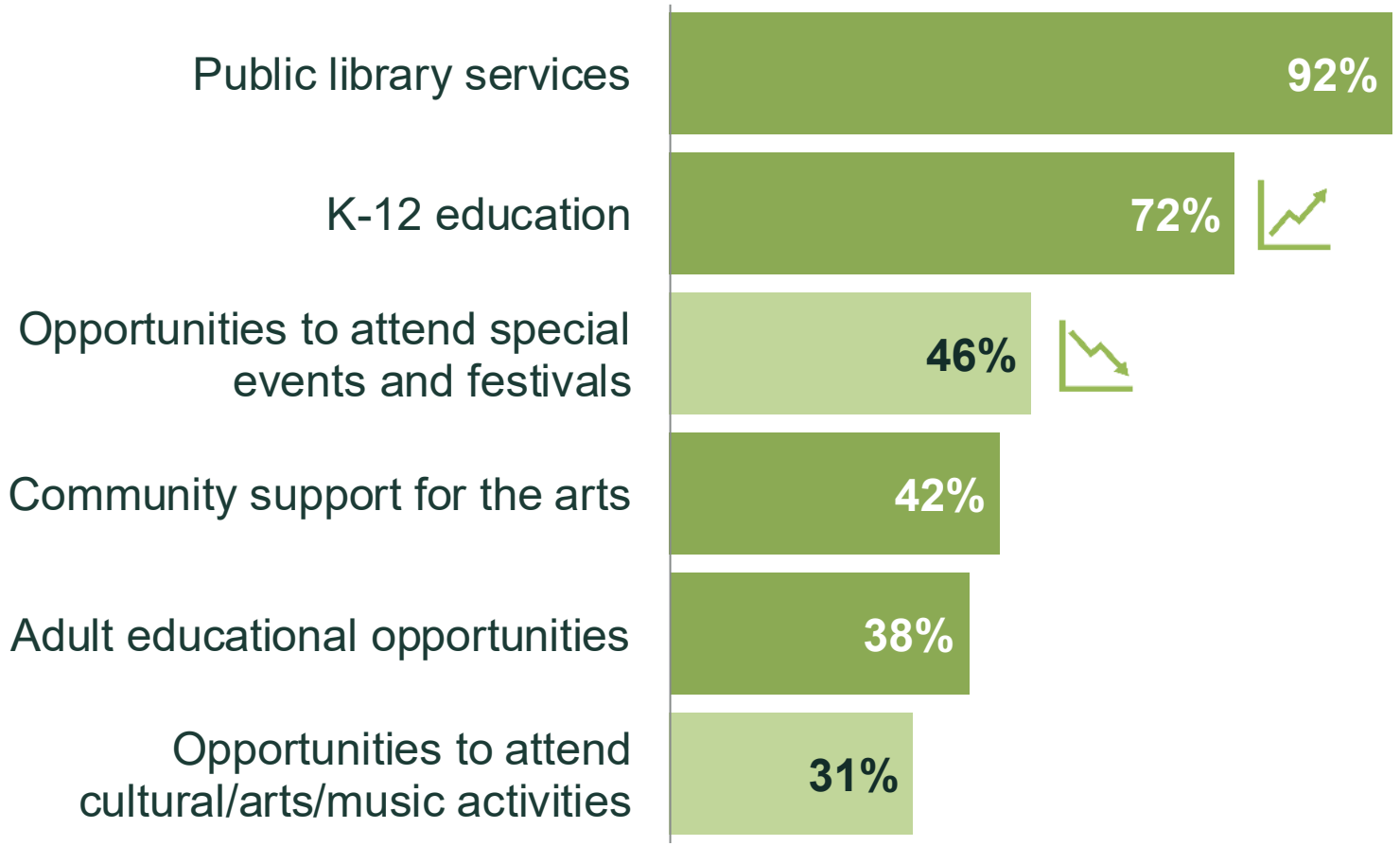

Percent excellent or good

Additional Special Topics

13. What can the City of Mountlake Terrace do to further increase public safety for residents and visitors? Select all that apply or none of the above.

- ❑ Hold public safety trainings and seminars for the public
- ❑ More opportunities to meet/speak with the Mountlake Terrace Police Department (i.e. Coffee with a Cop)
- ❑ More community outreach with the police department and community
- ❑ Increased transparency/regular communication from the Mountlake Terrace Police Department
- ❑ Other (Please Specify):_____
- ❑ None of the above

14. What type of businesses would you most like to see in Mountlake Terrace? Select up to 5.

- ❑ Locally-owned restaurants (specify cuisine preferences in other)
- ❑ Specialty food stores (bakeries, butchers, ethnic markets)
- ❑ Coffee shops/cafes
- ❑ Breweries/taprooms
- ❑ Professional services (medical, dental, financial)
- ❑ Creative businesses (galleries, studios, makers spaces)
- ❑ Entertainment venues (music, theater, cinema)
- ❑ Boutique retail shops
- ❑ Grocery stores
- ❑ Hotel/motel
- ❑ Tech/startup companies
- ❑ Light industrial/manufacturing
- ❑ Fitness/wellness centers
- ❑ Other (Please Specify):_____

15. With the light rail now open, what actions are most important for Mountlake Terrace? Select up to 3.

- ❑ Attract more local-serving businesses
- ❑ Develop a vibrant town center
- ❑ Maintain affordable housing options
- ❑ Add more affordable housing
- ❑ Preserve small-town feel
- ❑ Become a regional destination
- ❑ Improve walkability/bikeability
- ❑ Enhance parks and public spaces
- ❑ Support business growth and jobs
- ❑ Increase family-friendly activities
- ❑ Add more places to stay
- ❑ Other (Please Specify):_____

16. What concerns you most about Mountlake Terrace's growth? Select up to 3 or no concerns.

- ❑ Loss of affordability
- ❑ Traffic and parking
- ❑ Loss of community character
- ❑ Overdevelopment
- ❑ Not enough development/growth
- ❑ Gentrification/displacement
- ❑ Lack of infrastructure
- ❑ Environmental impact
- ❑ Other (Please Specify):_____
- ❑ No concerns

17. Before today, were you aware that the City has been taking steps over the past year to address its long-term financial challenges?

- ❍ Yes
- ❍ No
- ❍ Not sure

18. How important is it to you that the City prioritizes fiscal responsibility while maintaining services as the community grows?

❍ Extremely important ❍ Very important ❍ Somewhat important ❍ Not at all important

Government

Please rate the following categories of Mountlake Terrace government performance.

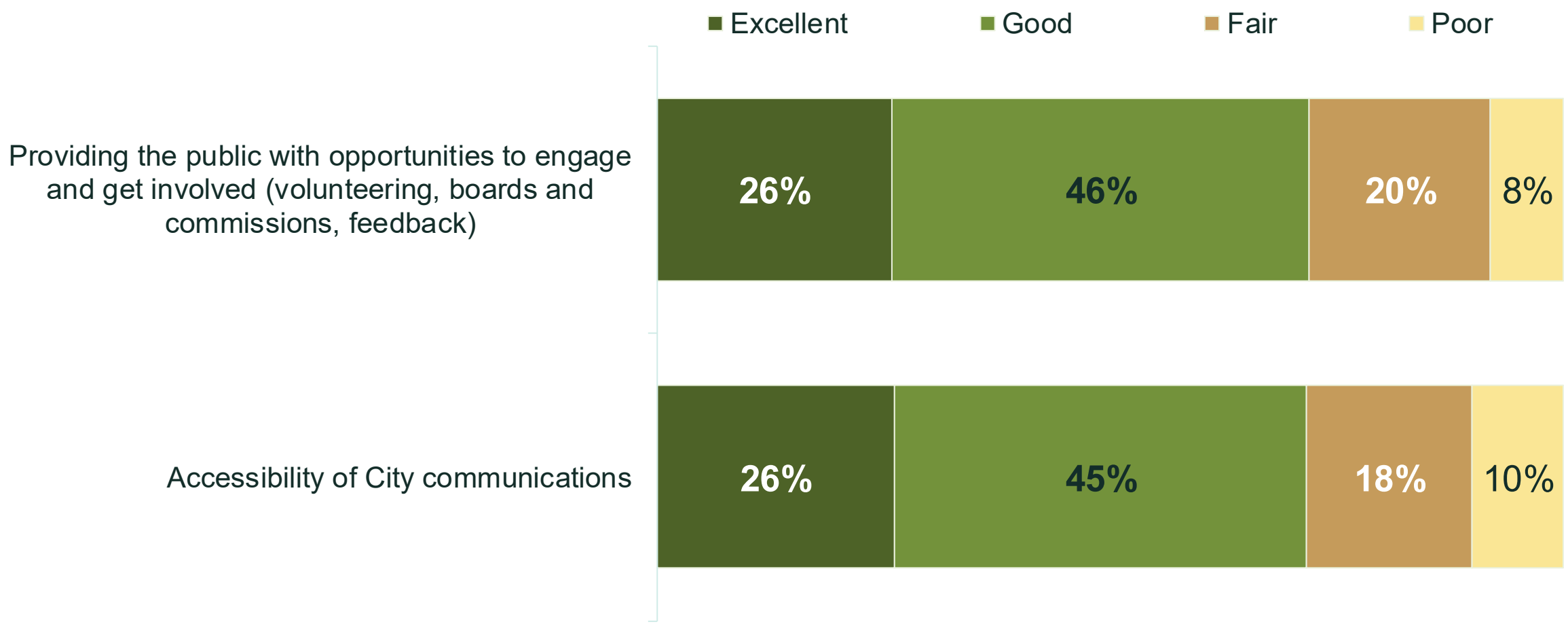

Public Safety Solutions

What can the City of Mountlake Terrace do to further increase public safety for residents and visitors? Select all that apply or none of the above.

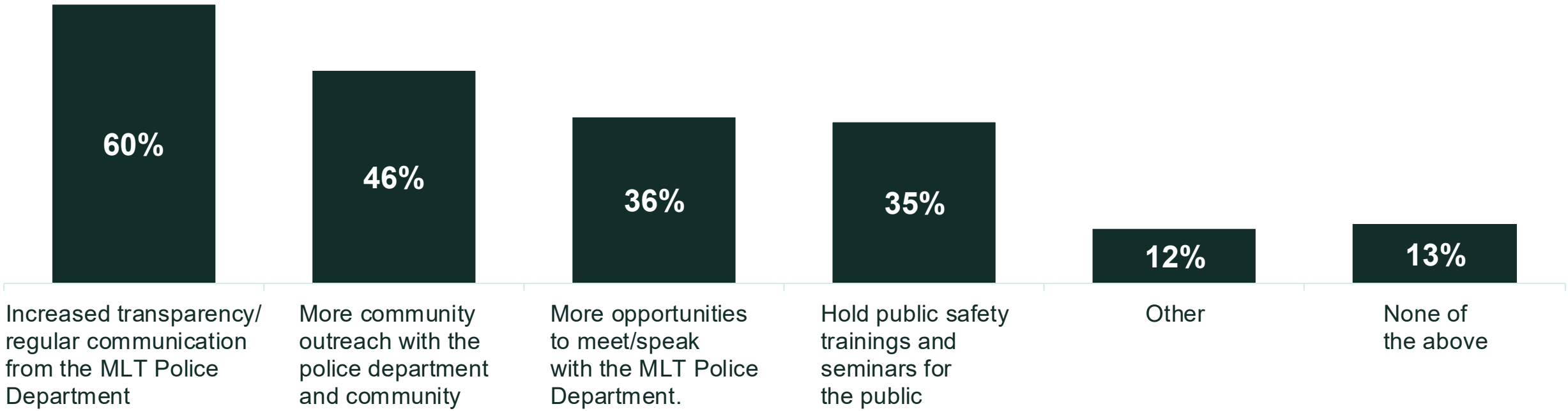

Types of Businesses

What type of businesses would you most like to see in Mountlake Terrace? Select up to 5.

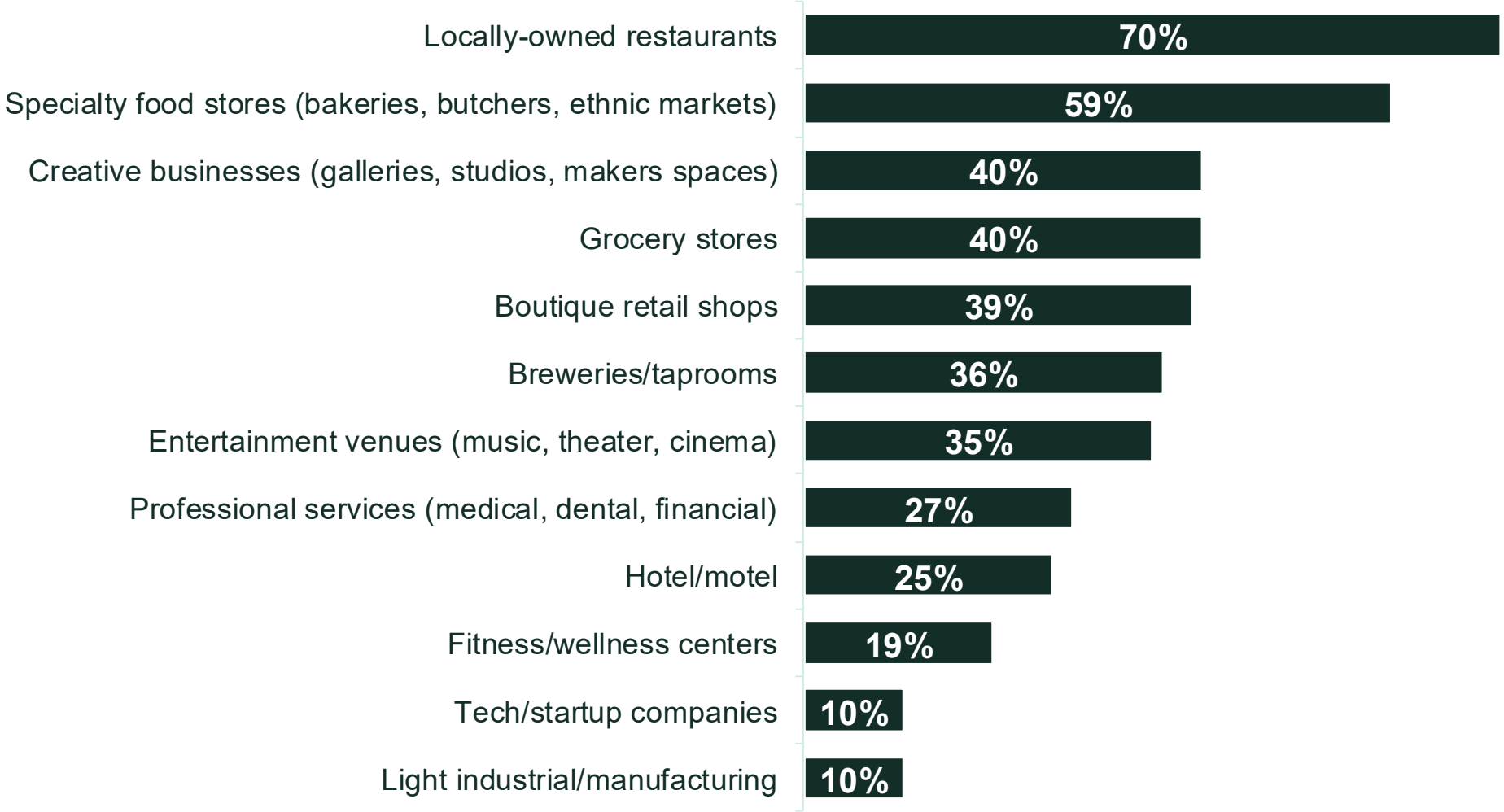

Future Actions

With the light rail now open, what actions are most important for Mountlake Terrace? Select up to 3.

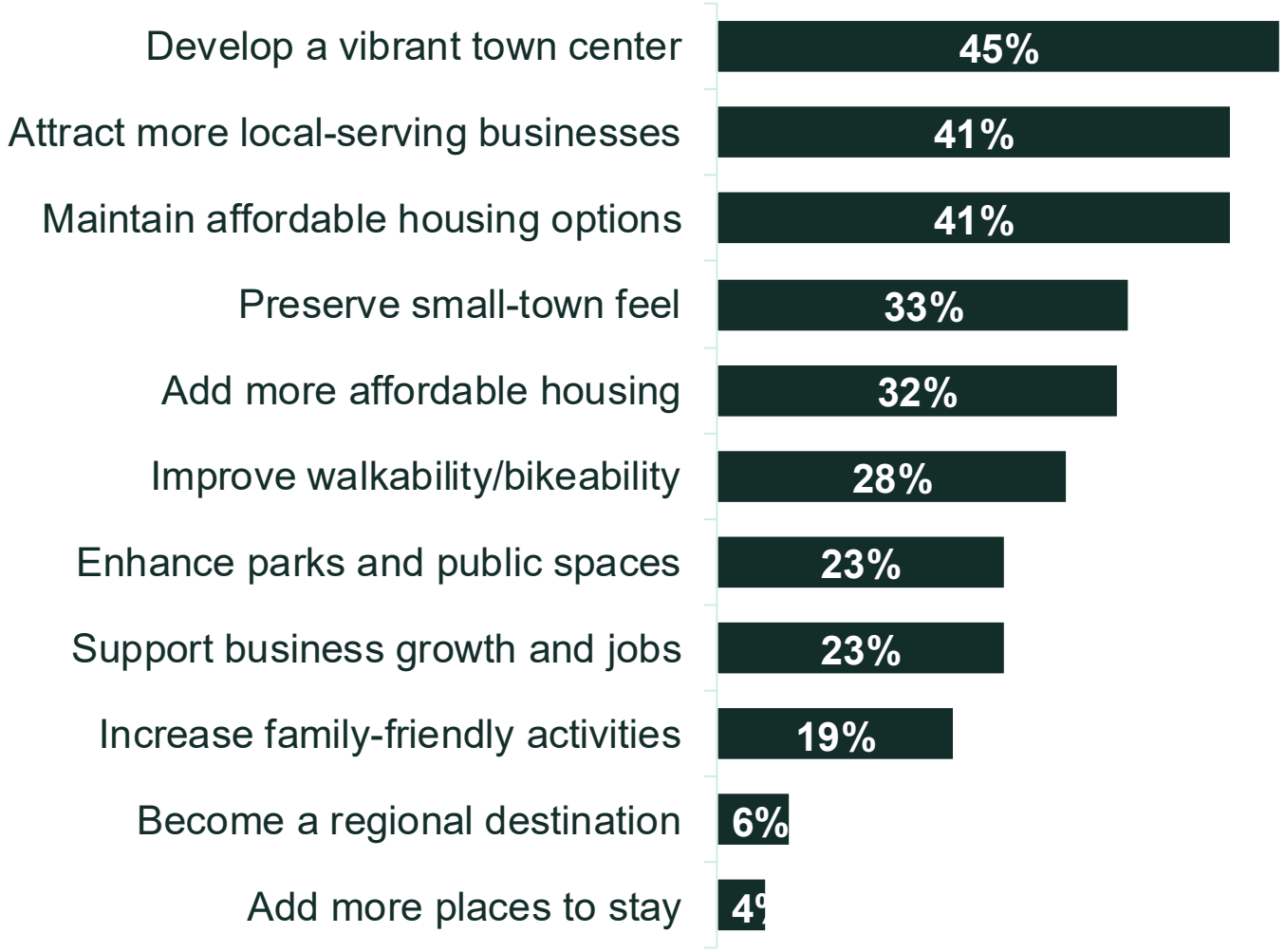

Resident Concerns

What concerns you most about Mountlake Terrace's growth? Select up to 3 or no concerns.

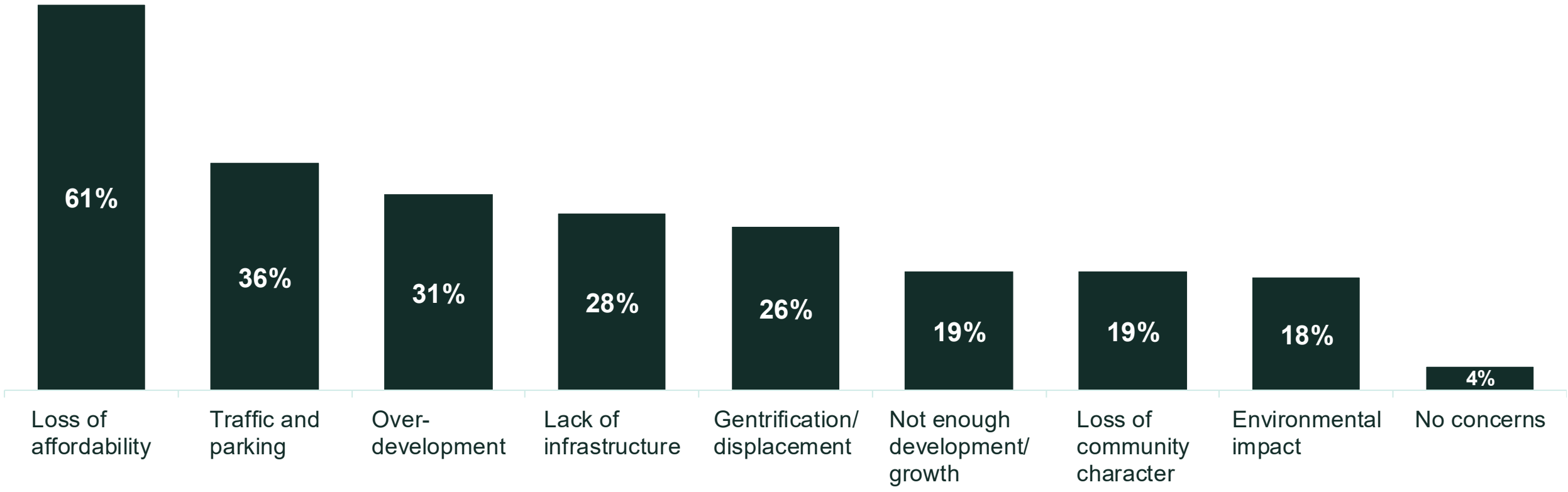

Financial Plans

Before today, were you aware that the City has been taking steps over the past year to address its long-term financial challenges?

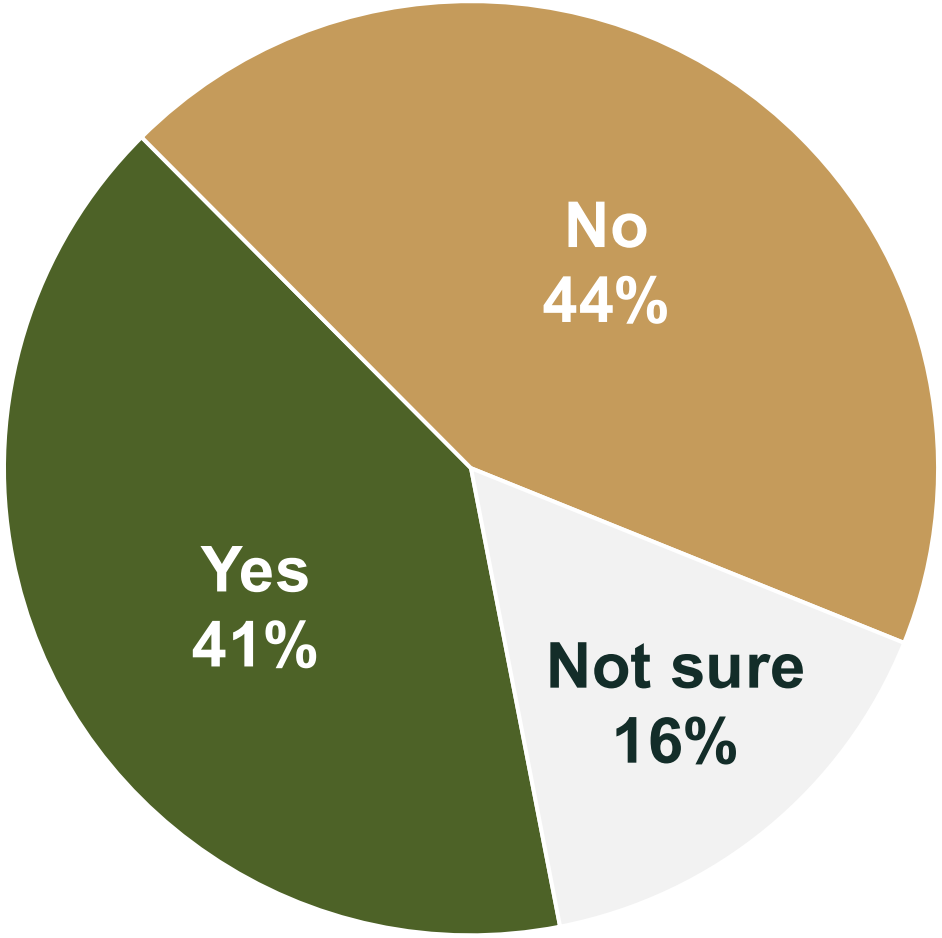

Fiscal Responsibility

How important is it to you that the City prioritizes fiscal responsibility while maintaining services as the community grows?

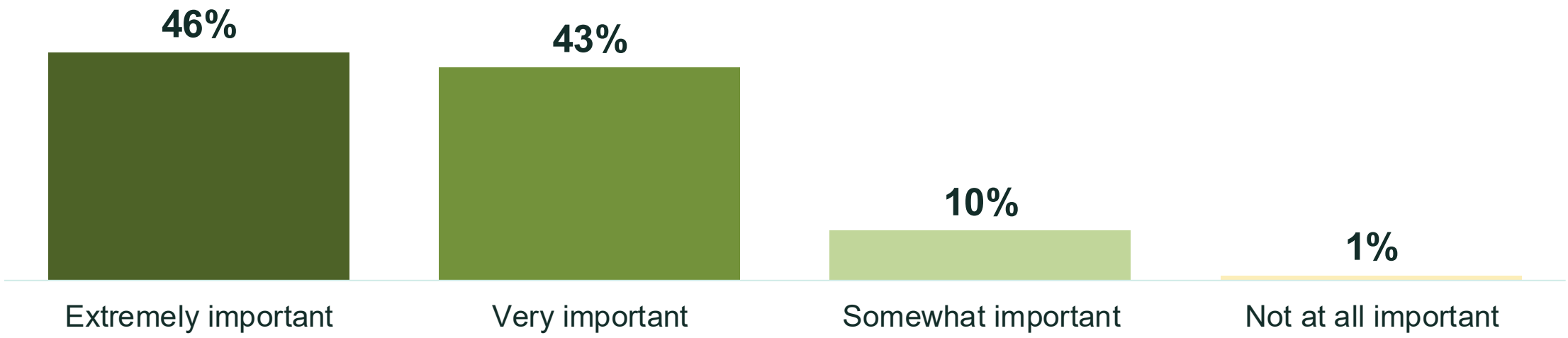

Summary of Findings

1. Residents rate Mountlake Terrace highly as a place to live.
2. Residents express growing confidence in City governance.
3. Residents feel safe in the community.
4. The local economy and commercial environment receive lower ratings.
5. Residents report mixed experiences with housing and community design.
6. Mobility is a clear strength.
7. Arts, culture, and community activity ratings may point to growth opportunities.

Next Steps: Continue to **Engage** Residents and **Track** Outcomes

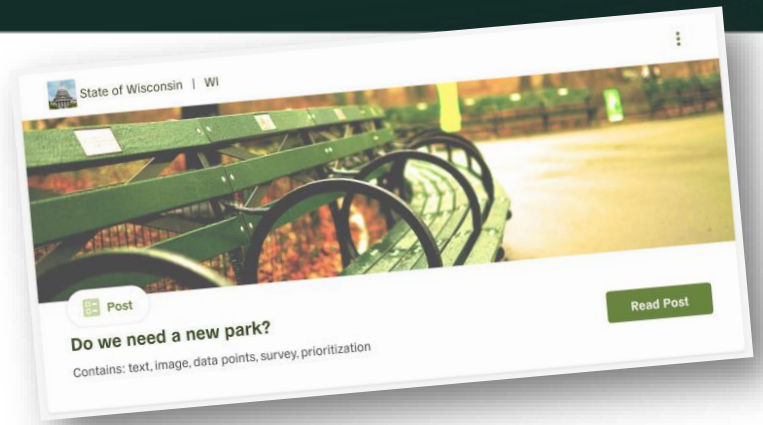

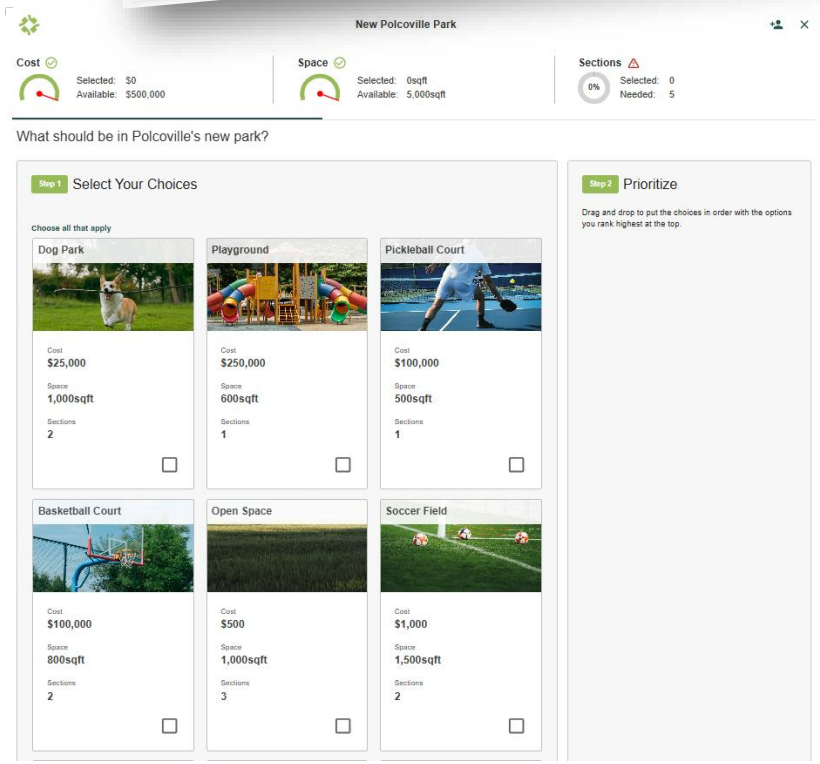

City of Mountlake Terrace currently has 346 subscribers on Polco

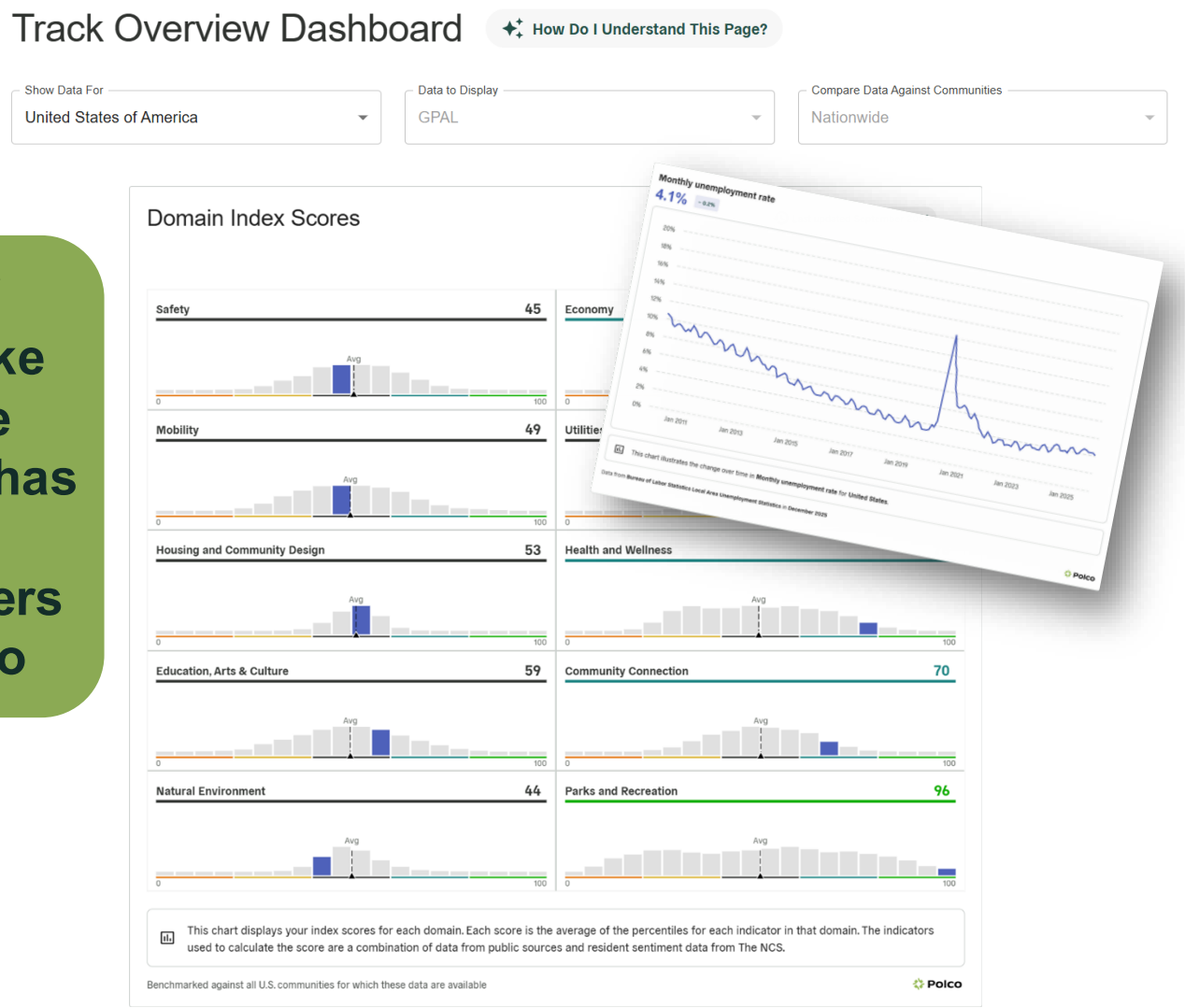

Questions?

Thank you!

Sonya Wytinck
Executive Vice President of
Data and Insights
Polco/National Research Center
sonya@polco.us

Mountlake Terrace

Branding & Placemaking | Council Update

5.28.2026

Contents

01 Project Overview

02 Brand System

03 Wayfinding & Streetscape

04 Placemaking Concepts

05 Looking Forward

01

Project Overview

Branding & Placemaking as Economic Strategy

Branding and placemaking are how a city tells investors it's open for business, how residents feel proud enough to recommend their town to a friend, and how a quiet stretch of sidewalk becomes a place worth lingering on long enough to buy a coffee.

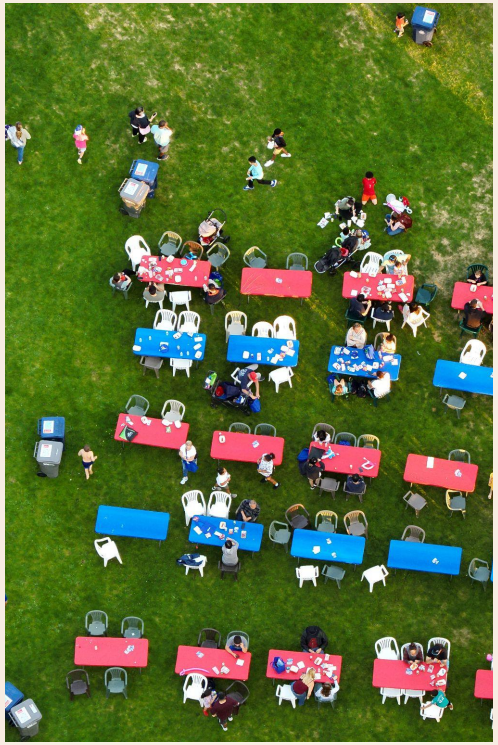

THIS WORK ACTIVATES:

- Foot traffic and dwell time
- Business attraction and retention
- Local spending and tax revenue
- Community pride that compounds

Scope & Timeline

PHASE 1

OCT - DEC

Brand Audit

Community Survey

Site Visit

Stakeholder Discussions

Positioning + Audience Analysis

Strategic Direction

PHASE 2

JAN - APRIL

Brand Platform & Marketing Direction

Resident Open House + Council Presentation

Brand Development

Wayfinding & Placemaking Strategy

PHASE 3

MAY- JULY

Council Presentation

Marketing Strategy

Brand Templates

Brand Guidelines

Staff Training

WE ARE HERE

Deliverables from This Process

- **Market positioning** and **target audience** strategy
- **Brand platform** with messaging framework and storytelling guidelines
- **Enhanced visual identity system** (typography, color palette, graphic elements)
- **Neighborhood brand strategy** for sub-areas
- **Wayfinding system design** (gateway signs, directionals, district identifiers)
- **Placemaking design guidelines** (street furniture, lighting, public art considerations)
- **Marketing strategy** with business attraction and visitor promotion roadmap
- **Branded collateral templates** (presentations, flyers, maps)
- Comprehensive **brand guidelines**

02

Brand System

2.1

Brand Messaging

Brand Story

Everyday Extraordinary

Step off the light rail and feel it almost immediately. Your shoulders drop. Your breathing slows. Your pace changes — and you realize that's exactly the point. Four square miles of parks, shoreline, and community built around one simple idea: your time is yours. Use it well.

The barista knows your name. The butcher has something worth cooking. The trails open to a view that stops you in your tracks. This is a place of everyday extraordinary — where joy finds a home, because the people who live, work, and play here decided that's what makes a life well-lived.

And that is what Mountlake Terrace is building, a different kind of growth. Every day people founding businesses rooted in community, building careers that don't cost them their evenings, and growing neighborhoods where development makes life richer.

The people here have discovered that a life well-lived and a community on the rise are one and the same.

Four square miles where every one counts. A crossroads with space to grow. A real place, for real people, ready for what comes next.

Brand Personality

Mountlake Terrace is four square miles of everyday people building extraordinary things—a place where you're connected to everywhere, rooted right here.

This has always been a place to build something. Now it's your turn.

Our character is:

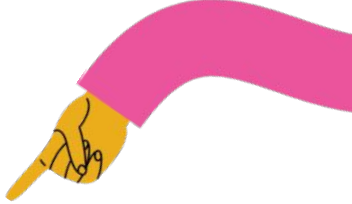

NEIGHBORLY

SMALL BUT MIGHTY

UNPRETENTIOUS

INTIMATE

AUTHENTIC

VIBRANT

Personality Traits

grounded optimist

Made up of a tight-knit community who know their neighbors, MLT believes that good things are still possible and acts on that belief. This has been earned through generations of people who built what they needed rather than waiting for it to arrive. This energetic community looks forward without forgetting what made it worth staying.

intentionally paced

Mountlake Terrace is growing—on purpose and on our terms. We'd rather walk than race, connect rather than compete, and savor rather than rush. The next chapter of our story is one of intentional, vibrant growth that allows us to grow into a true destination.

open-arms

MLT has always been a landing pad for anyone looking to build something. That spirit of welcome extends to the present: new neighbors, new businesses, and new ideas are met with genuine openness. We're building spaces for businesses ready to grow with us, and established companies looking for a home base and an unbeatable quality of life.

TONE

Warm, genuine, confident without being boastful. Speaks like a neighbor, not a brochure. Playful and personal in a way that celebrates the joy of MLT living.

ENERGY

Steady and assured. Lively and vibrant. Not sleepy—*intentional*. Not quiet—*connected*.

LANGUAGE

Accessible and plain-spoken. Avoids jargon, corporate-speak, or trying too hard. Uses "we" to reinforce community.

Taglines

CITY TAGLINE

Connected to Everywhere. Rooted Right Here.

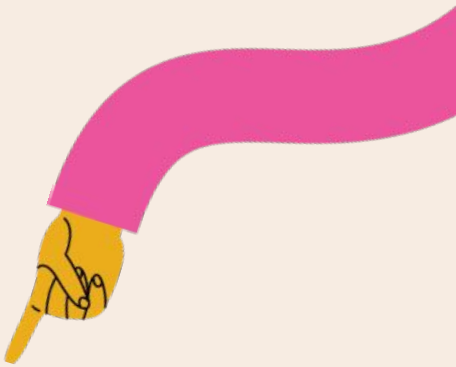

ECONOMIC DEVELOPMENT TAGLINE

Become Part of Our Story

Audience Specific Messaging

AUDIENCE: **CURRENT RESIDENTS**

Connected to Everywhere. Rooted Right Here.

GOAL: Celebrate their role as community builders, invite continued investment

You're part of the Mountlake Terrace legacy. The families who came for starter homes and built a city instead. The neighbors who didn't wait for someone else to fix the problem. The regulars who turned local shops into neighborhood institutions. Mountlake Terrace was made by everyday people for everyday people—and that includes you. Every block party you host, every local business you support, every neighbor you welcome adds to something bigger. Mountlake Terrace's next chapters exist in all of the amazing things you will create.

AUDIENCE: **BUSINESSES**

Big enough to build something. Small enough to matter.

GOAL: Attract entrepreneurs who want to build something rooted in community

You have a vision—a family recipe, a craft you've perfected, a gap in the market only you can fill. You just need a place that's ready for it. Mountlake Terrace is four square miles of customers who become regulars, regulars who become neighbors, and neighbors who become your biggest champions. With light rail connecting you to the region and a vibrant Town Center taking shape, there's room here for everyone.

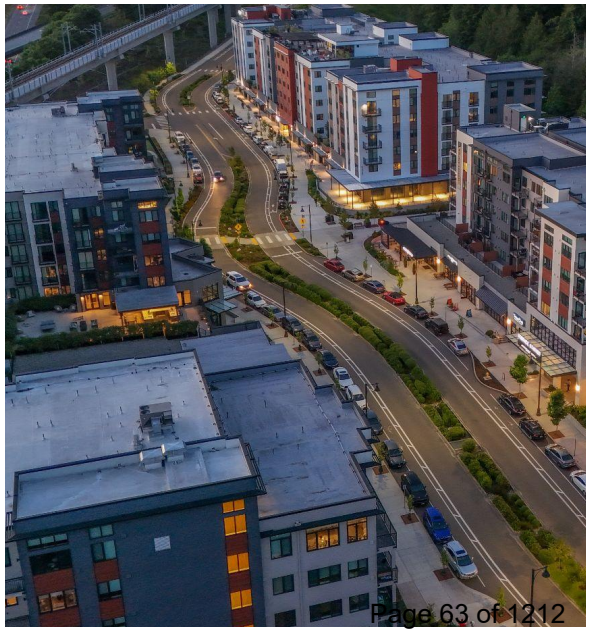

AUDIENCE: **VISITORS**

Small Town.
Big Things Happening.

GOAL: Showcase what everyday people have created here—businesses, culture, community. A place to work, dream, and play

The best things in Mountlake Terrace start small and become extraordinary. The butcher shop that's been working for generations. The bakery where the recipe came from someone's grandmother. The summer concerts where half the crowd knows each other by name. This is a place where everyday people build extraordinary things—and you can see it in every block, every shop, every conversation. Discover what everyday extraordinary looks like.

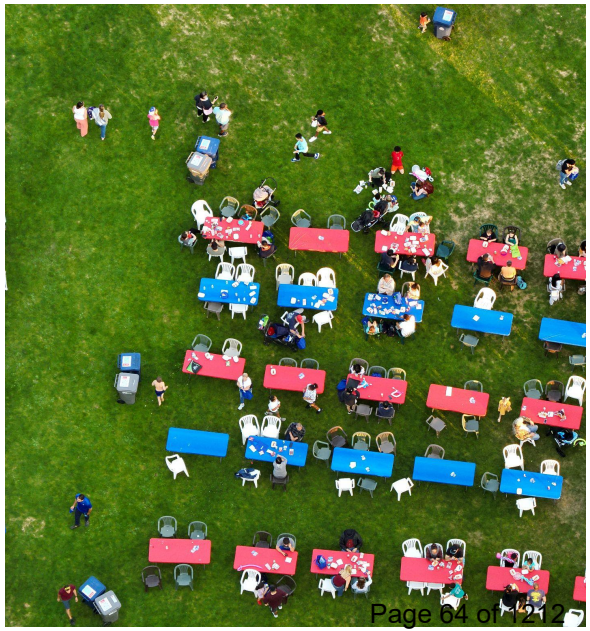

AUDIENCE: **DEVELOPERS**

Room for Vision. Space to Dream.

GOAL: Attract development that adds to the community rather than extracting from it

Mountlake Terrace is where the region connects — and where smart growth follows. With light rail now open and a vibrant Town Center taking shape, we're ready for development that fits: housing for residents seeking a life outside of Seattle, spaces for businesses rooted in community, and design that centers spaces for gathering. We're not looking for the fastest build or the biggest footprint. We're looking for partners who understand that four square miles means every project matters. Ready to build something that belongs?

2.2

Brand Aesthetic

City Logo: Refinements

BEFORE

AFTER

Badges & Marks

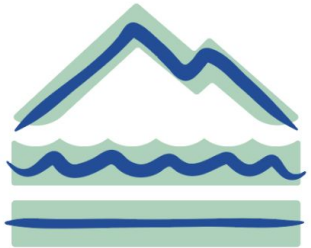

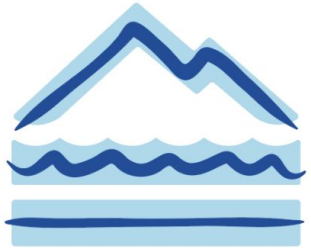

Typography & Colors

HEADLINE

BROTHER 1816

BODY

Domile

ACCENT FONT

Mountlake terrace

LIGHT RAIL IS OPEN

CORE COLORS

TINTS

SHADES

Collateral Updates

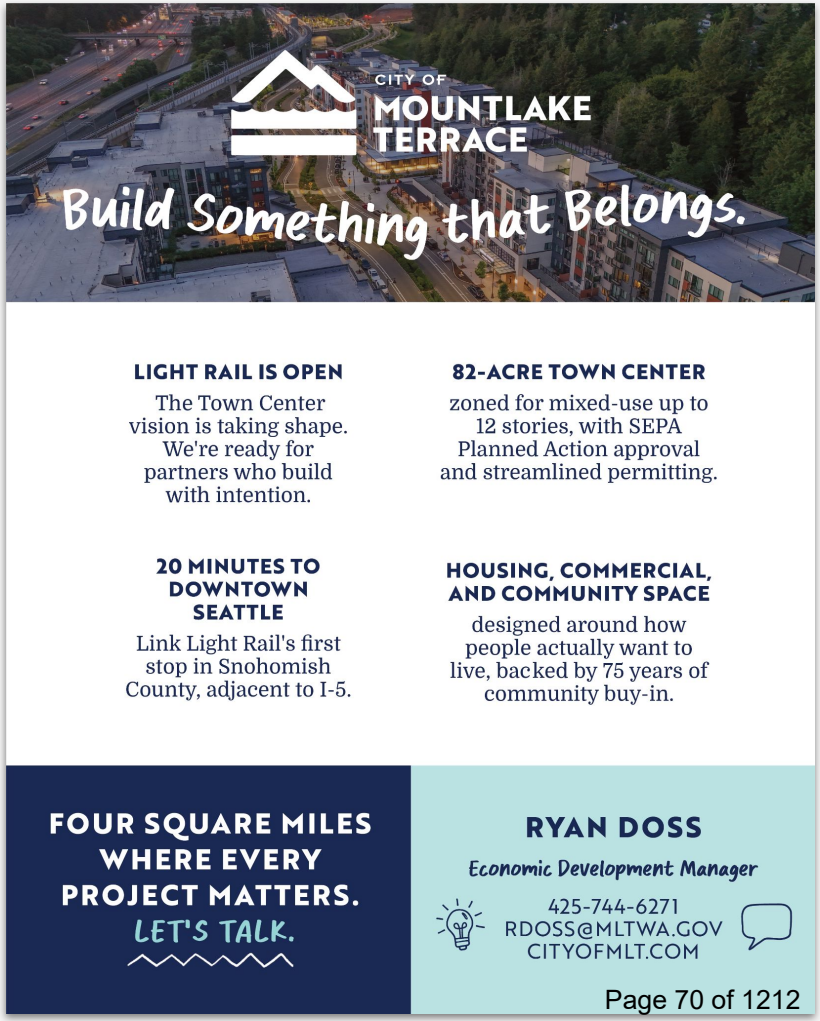

neighborhood sub areas

Goal: develop a distinct economic character for each of MLT's neighborhoods. Create a visual architecture and messaging to support future land use and zoning work, with better awareness and buy-in from neighborhoods

OUR DELIVERABLES:

- System of simple brand marks for each of the six sub areas that live within the city brand
- Key messaging about the personality of each district to guide future development and recruitment

USE CASES:

- Light pole banners (to build awareness, implemented slowly)
- Developer recruitment
- Marketing support for smaller commercial nodes
- Illustrated City map

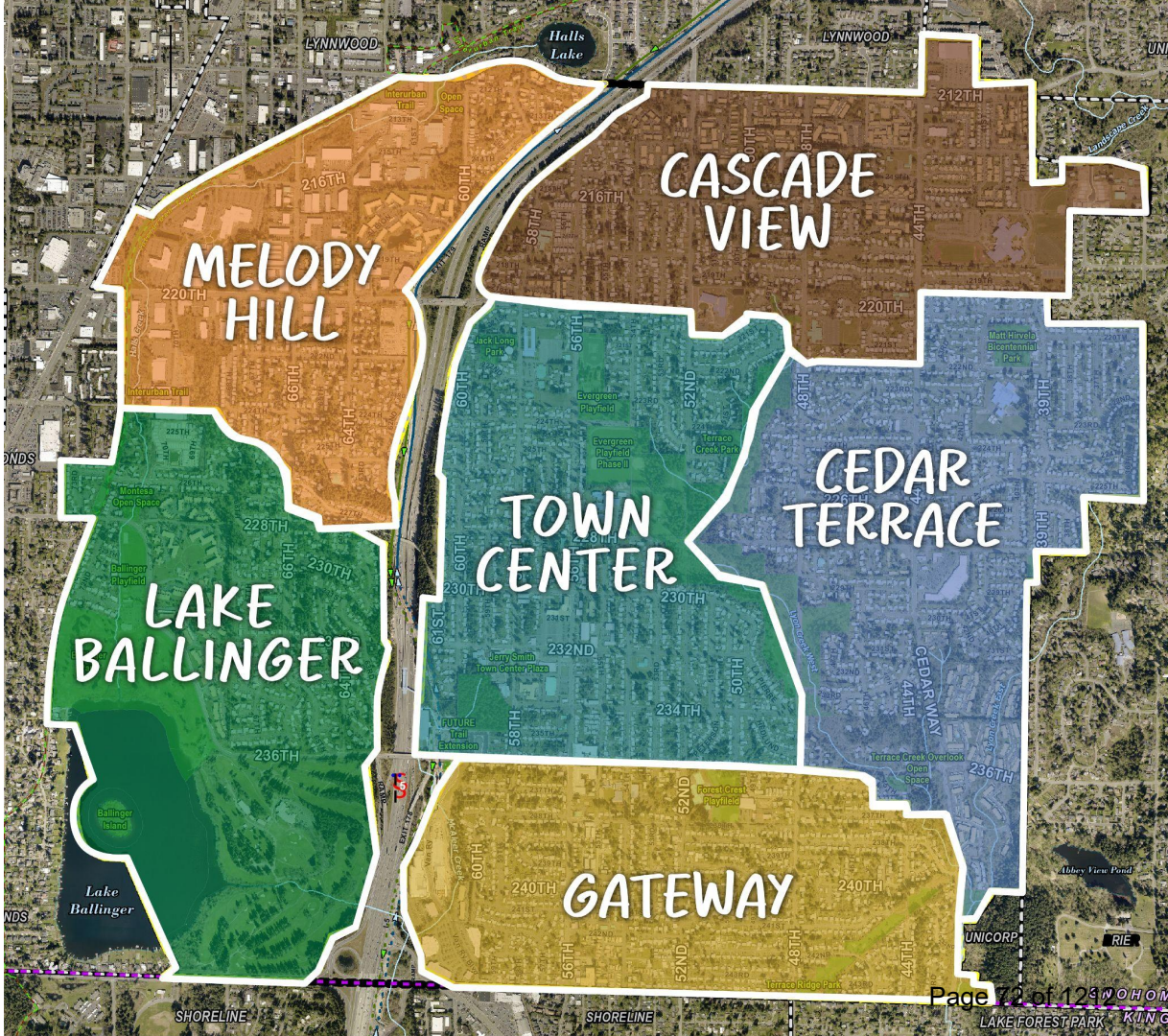

Sub Area Marks

TOWN CENTER

The heart of the city with transformation underway

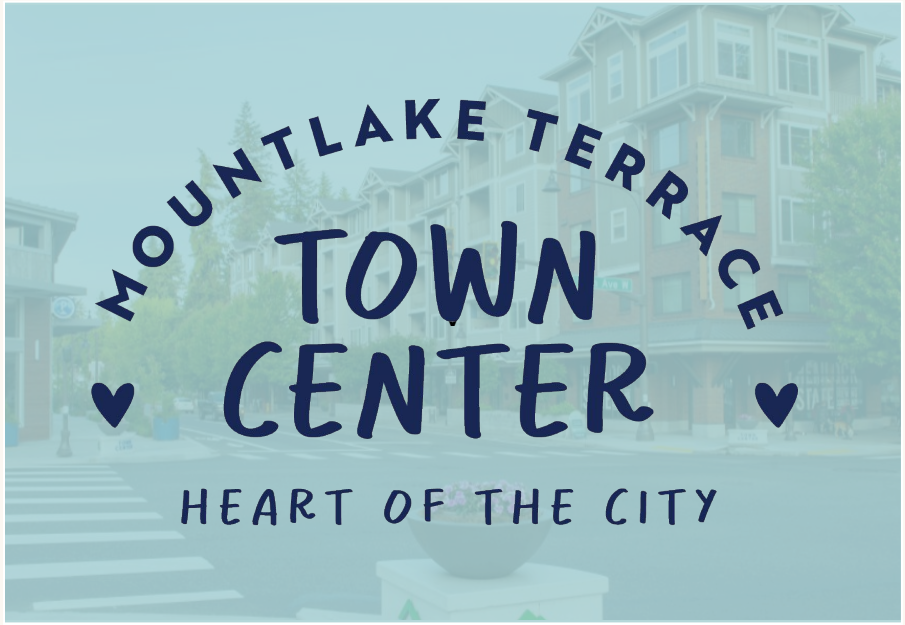

PERSONALITY: Becoming · Community-rooted · Walkable · Arts-forward

ASPIRATIONAL STORY

Mountlake Terrace is a town where people, parks, and play are at the center of everything. Town Center will reflect that. People want to run into their neighbors, support local businesses, and gather seasonal attractions and everyday encounters.

This is an opportunity to build place: lean into community-focused events, build spots to sit and stay awhile, and embrace art and expression.

MELODY HILL

MLT's employment engine with an evolving identity

PERSONALITY: Industrious · Workshop · Unpretentious · Forward-looking · Grounded

ASPIRATIONAL STORY

The Pacific Northwest is known for its trailblazers of innovation. Melody Hill is Mountlake Terrace's innovation district with room for even more dreaming. Currently home to a diverse range of businesses and industries, Melody is a neighborhood that will expand to offer full-service work and play to its residents and commuters. The investment and development of hotels, coffee shops, fast casual restaurants, event and meeting spaces, will become amenities for new businesses hoping to plant roots here.

LAKE BALLINGER

MLT's natural heart and a gem that deserves to be found

PERSONALITY: Restorative · Remarkable · Grounded · Unhurried · Connected

ASPIRATIONAL STORY

If there was ever a place to give yourself a time-out, Lake Ballinger is it. MLT's natural heart sits tucked at the edge of the city, beloved by the community. The lake has filled this land with richness and life since long before the city existed, carrying an indigenous history and a story of remarkable restoration. Today, Ballinger Park is actively transforming — a place to play, kayak, fish, swim, and explore — holding both the stillness of a lakeside morning and the energy of a full community event in the same breath.

GATEWAY

MLT's southern arrival and the gateway to Snohomish County

PERSONALITY: Transitional · Energetic · Layered · Optimistic · Everyday

ASPIRATIONAL STORY

This is where the highway ends and MLT begins—where commuters exhale, where new residents land, where the city's growth is most visible. With continued investment, Gateway is becoming a complete neighborhood: activated mixed-use on the east side of the highway, local character and green space on the west, and enough critical mass on both ends to function as a destination rather than a through-zone.

CEDAR TERRACE

Established and quietly self-sufficient

PERSONALITY: Rooted · Unhurried · Neighbor-facing · Steady · Quietly proud

ASPIRATIONAL STORY

Cedar Terrace is what a rooted community looks like. In a world moving fast, there's value in a neighborhood that has always known its purpose: good streets, good neighbors, everyday life done well. Cedar Plaza will be that neighborhood anchor – reimagined. The bones are there, and so is the habit of gathering. With the right investment, it will become the destination for an even more walkable, more neighborly community.

CASCADE VIEW

A neighborhood still finding its name

PERSONALITY: Underestimated · Active · Emerging · Honest

ASPIRATIONAL STORY

Cascade View hosts a mixed residential fabric, commercial nodes, and a neighborhood identity built around athletic life, youth activity, and active community. It is honest about what's here and what it could grow into. Like its high school neighbor, this is where we dream and grow MLT pride.

03

Wayfinding & Streetscape

Goals

A wayfinding system for MLT should do three things:

Mark arrival.

Let people know when they've entered MLT, especially as they step off the light rail or cross a city boundary.

Anchor the brand.

Tie key destinations like Lake Ballinger and the Rec Pavilion back to the MLT identity, so the community reads as one connected place.

Move people to what matters.

Guide residents and visitors to the destinations, parks, and businesses that make MLT worth exploring.

Priority Locations

GATEWAY SIGNS

DIRECTIONAL SIGNS

DISTRICT BANNERS

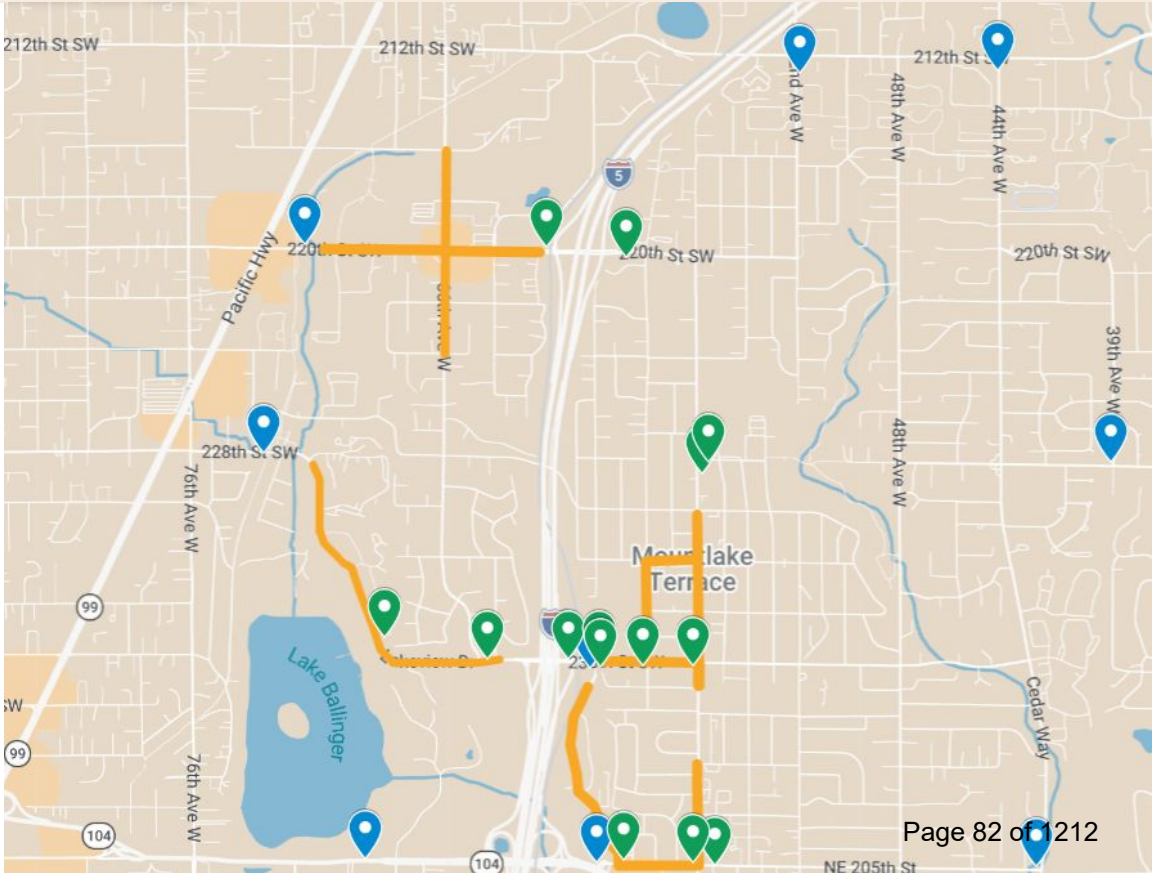

Signage Concepts

Anatomy of a Sign Family

A complete wayfinding system for MLT will include the following pieces, each working together to form a consistent visual language across the city:

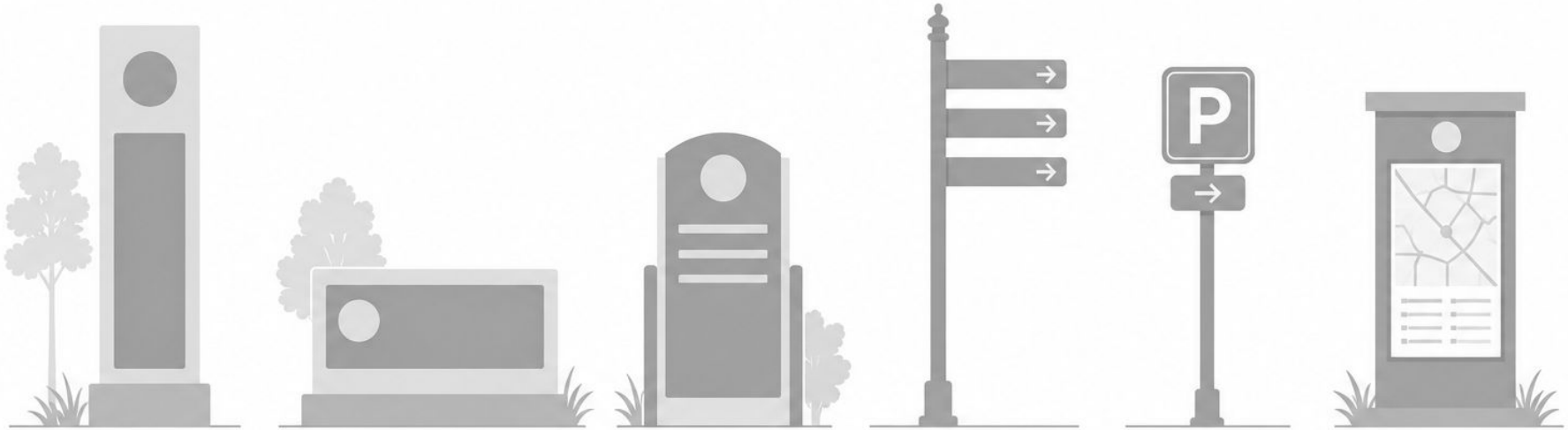

Vertical monument signs for tight or vertical sites

Horizontal monument signs for prominent gateway moments

Identifier signs marking parks, civic buildings, and key destinations

Directional signs guiding people between destinations

Parking signs for public lots and on-street parking zones

Map signs at key arrival points

Anatomy of a Sign Family

WHAT THESE CONCEPTS ARE

These two directions show the look, feel, and material language of the full system to help you choose a direction.

WHAT COMES NEXT

Once a direction is selected, we'll develop concept-level designs for each piece in the family so you can see how the system reads as a whole.

WHAT THIS ISN'T

These are not construction-ready documents. A fabrication partner will need to develop final engineering, structural details, mounting specs, and material certifications. The City will also need to confirm exact placement, quantities, ADA compliance at each site, and any easement or right-of-way considerations.

Direction A

BUDGET CONSIDERATION:
Lower fabrication cost. Potential refinishing required every 5 - 7 years.

VERTICAL GATEWAY SIGN

IDENTIFIER SIGN

WAYFINDING SIGN

Direction B

BUDGET CONSIDERATION:
Higher upfront investment. Designed to last 30+ years with minimal maintenance.

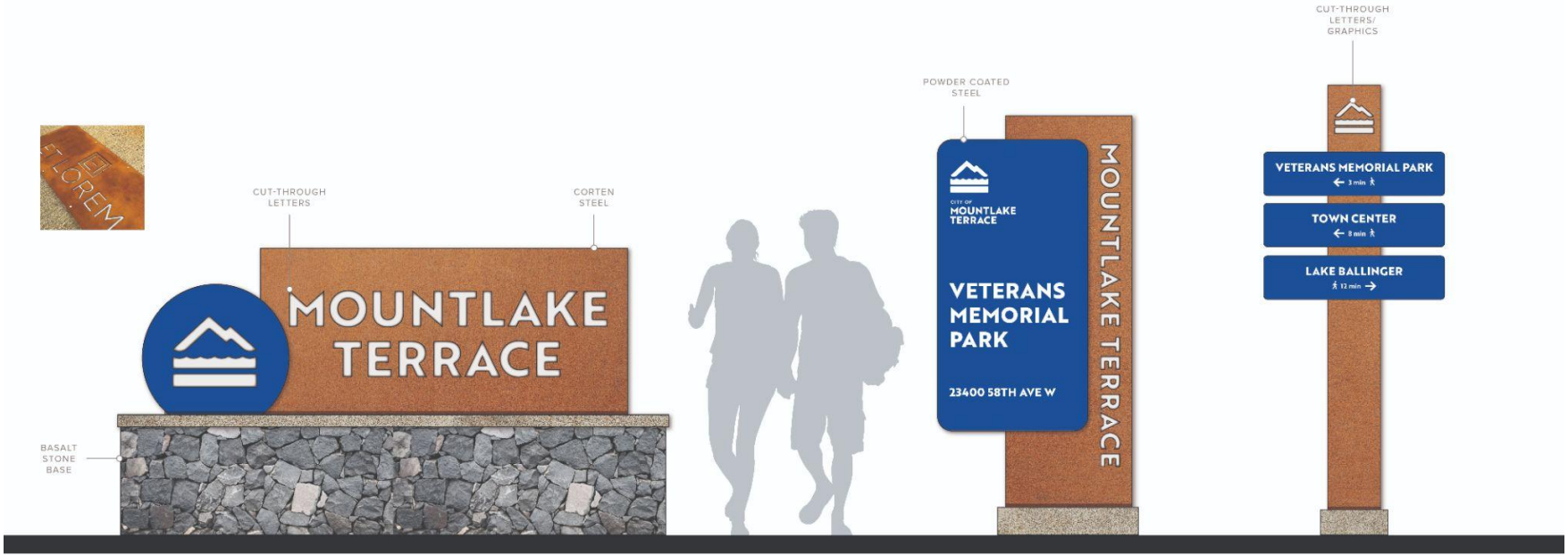

HORIZONTAL GATEWAY SIGN | IDENTIFIER SIGN | WAYFINDING SIGN

Streetscape Ideas

Wayfinding tells people where they are and where to go. The streetscape tells them what kind of place they've arrived in. These four interventions extend the MLT brand into the everyday public realm.

Planters & Benches

MLT is a place where people linger. The brand is built on the idea of slowing down, of bumping into a neighbor and staying a while. The street furniture that fills the community should make those moments easy.

GUIDANCE:

As Town Center continues to take shape and future streetscape investments are made, consider a modular system like Landscape Forms' Parallel 42 line.

Warm wood paired with powder-coated metal in bold colors gives the system a Pacific Northwest sensibility while still feeling fresh and civic.

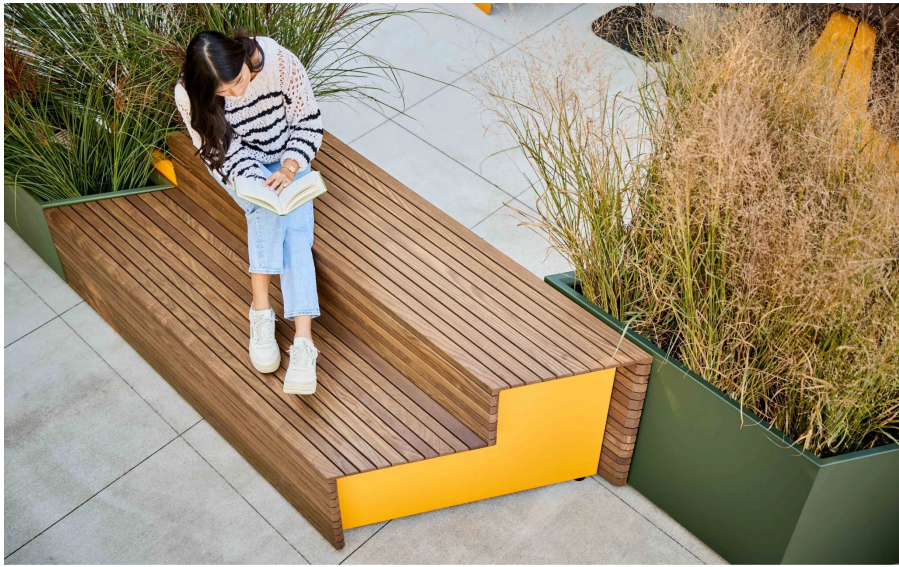

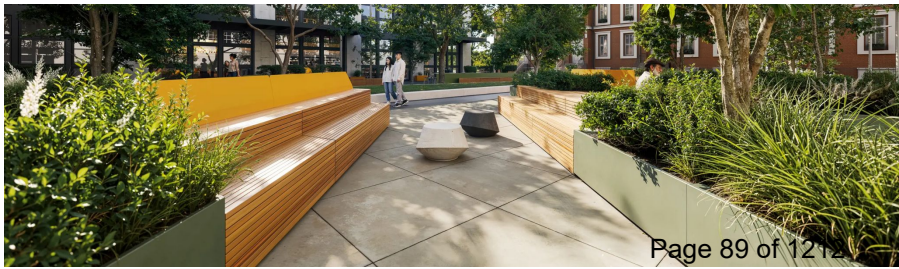

Intersection & Crosswalk Art

Painted intersections make a place feel alive, more human, more cared for. And they make people safer.

Bloomberg Philanthropies' Asphalt Art Initiative has documented the effect: at sites with painted intersections and crosswalks, crashes involving pedestrians and cyclists drop, drivers yield more often, and conflict points become more legible to everyone using the street.

A bold design at an intersection is a low-cost safety intervention that also happens to be beautiful.

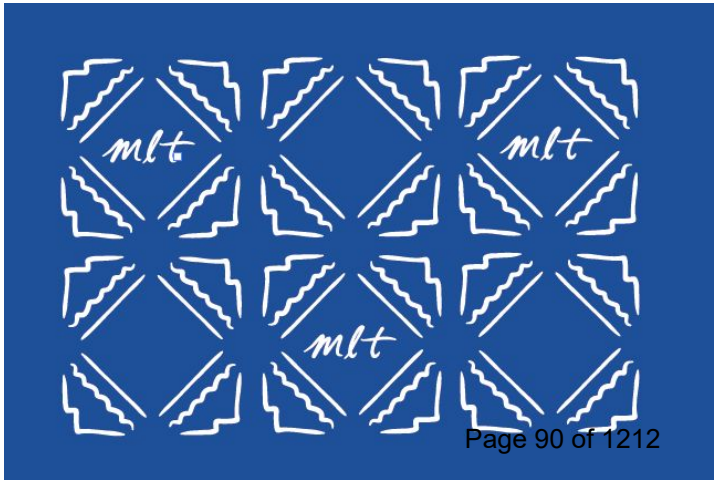

Intersection & Crosswalk Art

WHERE TO START:

Three priority intersections where this would have the most immediate impact:

- **236th & Van Ry**
- **236th & 56th**
- **56th & 232nd**

These are high-traffic pedestrian crossings and the connective fabric between Town Center and the surrounding neighborhoods. They're the places where the safety and placemaking both play an important role.

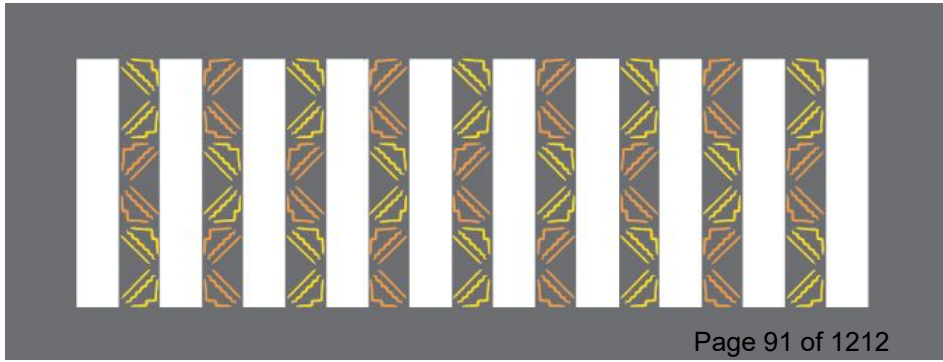

Street Signs

As street signs need to be replaced or added, utilize an updated variation of the sign, as detailed to the right. This simplified version is designed to live next to the current street signs, so that a larger overhaul of signs isn't necessary.

PROPOSED:

EXISTING:

Utility Box Art

GUIDANCE:

Lean into hand-rendered illustration. Native flora, local fauna, the mountains, the lake, the trees. The contrast of something gritty and infrastructural being transformed into a small nature scene is what makes the genre work.

CONSIDERATION

Even though these will be printed as vinyl wraps, the source artwork should be developed by illustrators working in traditional or painterly styles to best tie into the handmade nature of the brand. The goal is for someone walking past to think "a person painted that.”

Utility Box Art

As future utility box art is commissioned, consider:

- Prioritizing local illustrators and painters over graphic designers and issuing calls that specifically invite hand-rendered, illustrative, or painterly work
- Building a small library of approved imagery (native plants, local birds, etc)) that artists can interpret in their own styles
- Treating the boxes as a coordinated series rather than one-offs, so the citywide collection reads as a single commissioned project over time

Street Pole Banners

GUIDANCE:

Create a set of illustrated street pole banners that create a sense of place and reinforce the sub area identities.

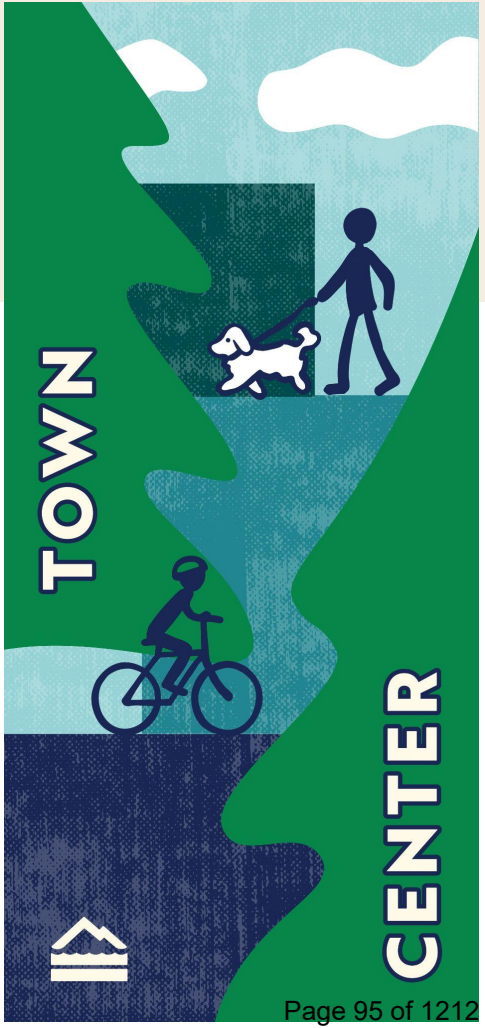

04

Placemaking Concepts

Overview

Public art and programming should do more than decorate, it should tell people where they are. These nine concepts are organized around three themes that translate the MLT brand into things you can see, sit on, walk past, and join:

Everyday Extraordinary.

Native plants, real neighbors, the ritual of arrival.

Stacked Stories.

The land's history, the city's logo, the layers that make MLT.

A Place Where You Belong.

The yard, the bench, the parade. Designed for participation.

01

Everyday Extraordinary

The ordinary, made remarkable by everyday people who have a tremendous pride in place.

1. 1: The Light Rail Welcome

THE IDEA:

A piece of writing, installed at the station exit/entrance. Could be a poem, a land acknowledgment, resident stories, or something else entirely. Two ways to do it:

- **Short-term:** Vinyl or paint ground application. Fast to install, easy to refresh, and a strong pilot before committing to permanent infrastructure.
- **Permanent**: A cut-out installation lit from within to project text onto the sidewalk. Reference multi-lingual light columns in Toronto and Vancouver.

1.1: The Light Rail Welcome

CONTEXT:

A pedestrian plaza is currently in development near the station will help welcome folks, and this installation is meant to complement that space. The plaza creates the room; the words give it a voice. Because the plaza sits slightly up the block, this piece greets people in the first few seconds after they step off the train, before they've reoriented to the street.

WHY IT FITS:

The brand story opens with *“The moment you step off the light rail. Shoulders drop, breathing slows, pace changes.”* That moment is MLT's highest-impact piece of placemaking real estate.

WHERE: Light rail station exit at 236th

1.2: A Thousand Blooms

THE IDEA:

Joy lives in abundance. One of anything is nice. A thousand of anything is unforgettable. Think cherry blossoms at the University of Washington or the tulips that line the street in Holland, Michigan.

The principle: pick one shade-loving Pacific Northwest native, plant a lot of it in one place, and let repetition do the work. The Western bleeding heart (Dicentra formosa) is a strong starting candidate (native, resilient, and blooming March through August) but the concept holds for any plant with the right characteristics: shade-tolerant, regionally native, low-maintenance, and capable of carpeting a space at volume.

1.2: A Thousand Blooms

WHY IT FITS:

A common native plant, made spectacular through abundance. The everyday made extraordinary, in plant form.

WHERE: Veterans Memorial Parkway path leading into Town Center.

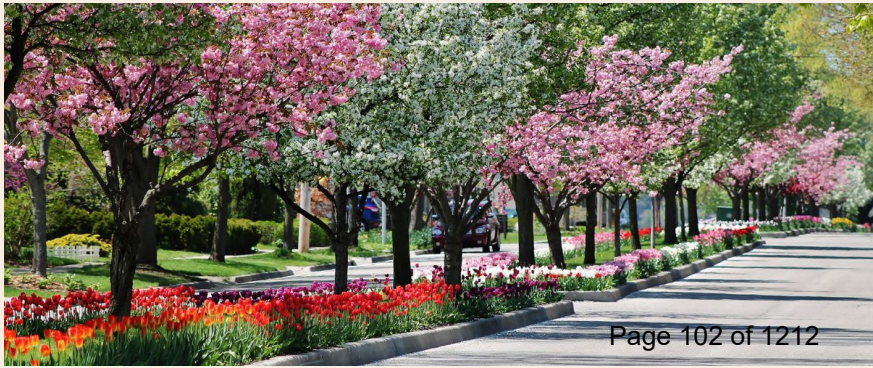

1.3: People of MLT Murals

THE IDEA:

Every neighbor city has nature murals. They're lovely and forgettable. Murals featuring people, the depth and diversity of MLT's residents, are what set a place apart. Two ways to do it:

- **Short-term:** The Inside Out Project. Photograph community members at an event, then wheatpaste their portraits onto a wall as live public art. Low cost, high participation, instant Instagram moment.
- **Permanent**: A commissioned mural series featuring real MLT residents, each by a different artist. Subjects could be nominated by neighbors, drawn from longtime business owners, or selected through an open call.

1.3: People of MLT Murals

WHY IT FITS:

The land we know as MLT was built by everyday people who were willing to bet on the extraordinary. It's a place by people for people. Tell the stories of the icons and legends and allow everyone to see themselves as an every day hero.

WHERE:

Priority location–public library wall on 58th street

CONSIDERATION:

Seek muralists with experience in unique portraiture.

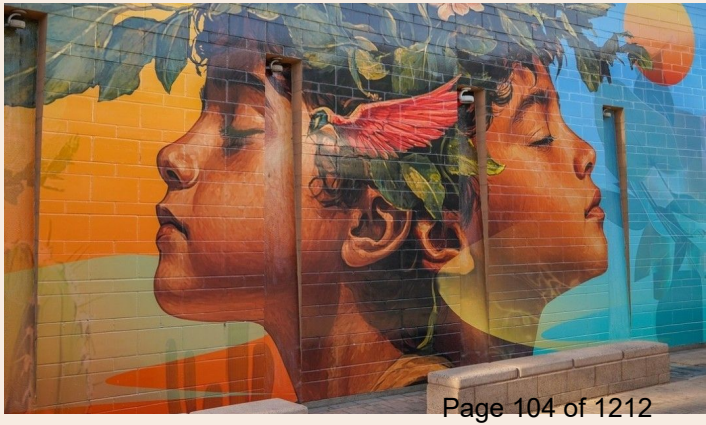

1.4: The Rubber Ducky

THE IDEA:

Lean into the rubber ducky. Not as a forced city mascot, but as the running joke that everyone's in on. A giant inflatable ducky shows up at National Night Out. Rubber ducks float down Lyon Creek in a summer race. Stickers, swag, the occasional duck spotted in a planter where it doesn't belong. The duck is the visual punchline of MLT's quiet confidence, and the contemporary stack on top of the older stories.

1.4: The Rubber Ducky

WHY IT FITS:

Small but mighty. The duck is the perfect MLT mascot. Unpretentious, cheerful, a friend of land, water, and sky, and already living here.

WHERE:

National Night Out (giant inflatable); Lyon Creek (annual race); hook-a-duck games at events, distributed across small moments citywide.

02

Stacked Stories

Layered meaning. Layered history. The MLT logo stacks vertically, and so do the stories of this place.

2.1: Community Totems

THE IDEA:

Commission a totem pole or cedar carving from an Indigenous artist of the Pacific Northwest Coast. The work tells the layered story of this land, from pre-contact through settlement, incorporation, and today, and ties visually to the city's own logomark.

WHY IT FITS:

The MLT logo stacks vertically. The land's history stacks vertically too. Snohomish and Coast Salish stewardship, homesteaders, post-war families, today's residents. Same form, layered meaning.

2.1: Community Totems

WHERE:

236th & 58th, a visible civic intersection.

CONSIDERATION:

This should be done in partnership with local tribal artists from the very beginning.

2.2: Cairns: Markers of the Path

THE IDEA:

Commission a sculptural cairn series from a local artist, or run a community contest to stack stones at key trail moments around Lake Ballinger and the Interurban Trail. Bonus: rock-stacking already has an organic social media following, so the form comes with a built-in audience.

WHY IT FITS:

Cairns are how you mark a trail you want others to find. MLT is worth finding. Stacking connection to the logo.

WHERE: Entrance to Ballinger Park; trailheads along the Interurban.

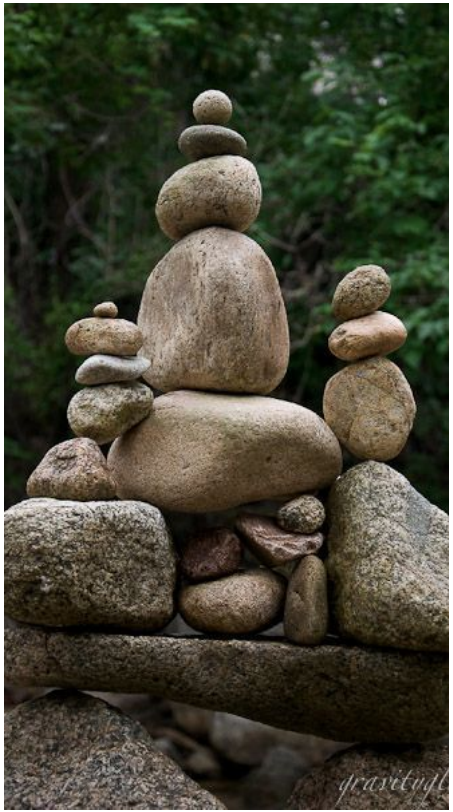

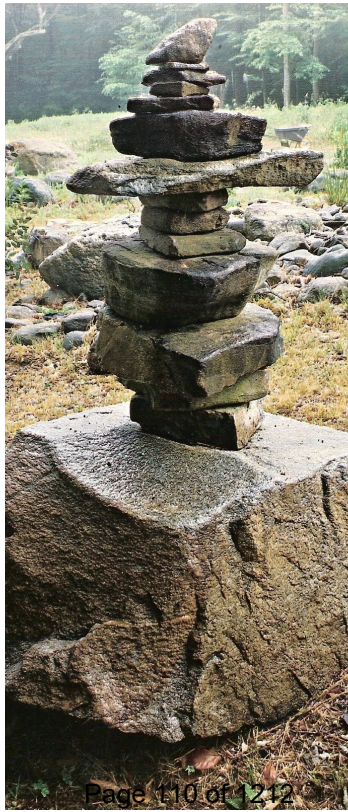

03

A Place Where You Belong

Neighborliness, made visible. The yard, the bench, the parade. All designed for participation.

3.1: A Yard That Says Hello

THE IDEA:

Give residents a kit / how-to guide for making their front yards more welcoming. This could include a moveable seating, a Little Free Library, a Q&A chalkboard, raised beds, and yard games. The city provides the playbook and maybe some supplies. Neighbors do the rest. Adopted from the Friendly Fronts model by the Musicant Group in Minneapolis.

3.1: A Yard That Says Hello

WHY IT FITS:

MLT is a place where you know your neighbors. Help give people the tools to foster that connection, to make the front yard a part of the social fabric, not just landscaping

WHERE:

Citywide pilot, with a starter cohort on a few blocks near Town Center to build visibility.

3.2: MLT Blocks

THE IDEA:

CNC-cut the three letterforms from wood/composite, sized for a front yard. Distribute them through a community paint day or as part of a Friendly Fronts kit. Residents finish their own: flowers, sports teams, house numbers, kids' artwork, cultural motifs, seasonal repaints. Over time, the city fills with hundreds of them, each unique. The form scales in three directions:

- Community kits. Primed and stake-ready, distributed at events. Residents paint their own.
- Artist editions. Local artists commissioned to paint a series, auctioned as a fundraiser or installed as a rotating public art trail.
- Civic-scale versions. Powder-coated steel or laminated timber, sized as gateway sculptures.

3.2: MLT Blocks

WHY IT FITS:

The MLT letters naturally stack / interlock. Turning the mark into a physical object that residents can paint, plant beside, or stake in their yard makes the brand something people can make their own.

WHERE:

Front yards citywide for the community version. Town Center plaza, Lake Ballinger, and key gateways for the civic-scale versions. An annual paint day at a city event to seed the program.

3.3: Pocket Pauses

THE IDEA:

Distribute small seating moments along walking routes throughout the four square miles. Not just benches, but invitations for connection and pause. Some rotate, some stay. A few options:

- **Porch swings:** Anchored to fixed posts in public space, painted in a signature MLT color. Similar to Detroit's Campus Martius park swings.
- **Colorful Adirondack chairs** in clusters of 3 to 5. Easy to install, easy to maintain, easy to move seasonally.

3.3: Pocket Pauses

WHY IT FITS:

MLT is a place that invites you to slow down. The lake, the trails, the parks. That feeling deserves more than a passing view from the sidewalk. Pocket Pauses are the physical permission to stop, sit, and stay a while.

WHERE:

Lake Ballinger overlook moments; the Interurban Trail; groupings in Town Center; the light rail station plaza. Think of these as a connected system.

3.4: The Big Small Parade

THE IDEA:

Tour de Terrace was retired by its nonprofit organizers in 2025, leaving a gap in MLT's summer calendar. The Seafair-sanctioned parade continues, and it's the anchor to build from.

The premise: big versions of small things. Giant ants. Six-foot rubber ducks. A colossal blackberry. Costumes, floats, and contingents that take the smallest things in MLT and blow them up to scale. Inspired by New Orleans walking krewes and second lines: participatory, handmade, a little weird, deeply local. Any neighbor, school, business, or cultural group can register a contingent and march. Around it, layer a weekend: a community marketplace, performances, kid programming, and evening activations that give people a reason to stay.

3.4: The Big Small Parade

WHY IT FITS:

A parade you watch is a parade for spectators. A parade you join is a parade for a community. The Big Small Parade is a premise no neighboring city could borrow without it feeling forced. With Tour de Terrace's retirement, MLT has a rare opening to define what its signature weekend looks like next.

WHERE:

Current approved parade route, with festival programming layered into adjacent venues across Town Center and the Civic Campus.

Additional Location Ideas

Opportunities for public art and placemaking exist throughout MLT. The following are a few specific sites to consider, in coordination with private property owners where applicable.

MOUNTLAKE TERRACE LIBRARY

MLT PLAZA FACING 58TH

PARK ENTRANCE ON 58TH

LIGHTRAIL INFRASTRUCTURE

236TH & 56TH INTERSECTION

236TH & 58TH INTERSECTION

WALL & FENCE ON 236TH

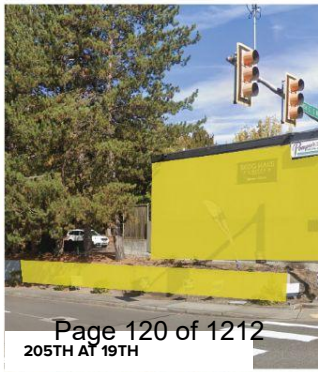

205TH AT 19TH

Engaging the Next Generation

Our community engagement reached hundreds of residents, but few under the age of 18. The students at Mountlake Terrace High School are the residents who'll grow up alongside Town Center's development and inherit these public spaces. Their voice belongs in this work.

WHAT WE'LL CREATE:

- **An engagement toolkit:** a small set of worksheets and visual boards that City staff can run at MLTHS during a club meeting, class period, or after-school event
- **Reaction tools for placemaking ideas:** visual cards showing ideas, with simple ways for students to respond honestly about what excites them and what's missing.
- **Mapping and ideation prompts:** a printed map for students to mark where they actually spend time, where they wish they could, and what would make a space feel like theirs.
- **Feedback** will be folded into final placemaking guidelines

05

Looking Forward

Marketing Strategy

JUNE

- **A roadmap with near- and long-term moves** for business attraction, visitor draw, and community pride
- **Channel, content, and partnership recommendations** with KPIs, so staff can prioritize what's high-impact and measure what's working.
- **An implementation plan** staff can execute over time.
- **Reconvene with the project team** for a working check-in once the draft strategy is ready for feedback and refinement.

Brand Handoff & Implementation

JULY

- **Collateral templates** for the formats staff use most
- **Brand guidelines** covering visual identity, messaging standards, photography direction
- **Digital asset library** with logos, templates, and assets organized for easy access across departments
- **Staff training session** to walk the team through the system and answer questions

Thank You!

All Together.

CITY OF
MOUNTLAKE
TERRACE

CITY OF MOUNTLAKE TERRACE

Q1 Fiscal Year 2026 Financial Report

City Council Work Session : May 28, 2026

Sirke Salminen, CPA, Finance Director
Artus Nemati, Senior Accountant

PURPOSE

Present update to the City's fiscal year 2026 position through the end of Quarter 1

CITY OF MOUNTLAKE TERRACE

AGENDA

- Fund by Fund Budget to Actuals
- Debt Payment Schedule

CITY OF MOUNTLAKE TERRACE

GENERAL FUND
CITY MANAGER

GENERAL OPERATING

Expenditure by Object	Q1	Q2	Q3	Q4	YTD Actual	Adopted Budget	% of Budget	Remaining
Salaries and Benefits	$ 416,332				$ 416,332	$ 2,117,089	20%	$ 1,700,757
Supplies	8,781				8,781	28,325	31%	19,544
Services	335,061				335,061	1,188,734	28%	853,673
Reimbursements from Other Funds	(342,162)				(342,162)	(1,578,368)	22%	(1,236,206)
Total	$ 418,012				$ 418,012	$ 1,755,780	24%	$ 1,337,768

Expenditure by Program	Q1	Q2	Q3	Q4	YTD Actual	Adopted Budget	% of Budget	Remaining
City Council	$ 29,942				$ 29,942	$ 179,576	17%	$ 149,634
City Manager	346,351				346,351	1,314,771	26%	968,420
City Clerk	53,559				53,559	349,733	15%	296,174
City Attorney	73,024				73,024	327,783	22%	254,759
Community Outreach	51,724				51,724	432,439	12%	380,715
Economic Development	138,444				138,444	416,407	33%	277,963
Human Resources	67,130				67,130	313,439	21%	246,309
Reimbursements from Other Funds	(342,162)				(342,162)	(1,578,368)	22%	(1,236,206)
Total	$ 418,012				$ 418,012	$ 1,755,780	24%	$ 1,337,768

CITY OF MOUNTLAKE TERRACE

GENERAL FUND
COMMUNITY DEVELOPMENT

GENERAL OPERATING

Expenditure by Object	Q1	Q2	Q3	Q4	YTD Actual	Adopted Budget	% of Budget	Remaining
Salaries and Benefits	$ 388,778				$ 388,778	$ 1,807,729	22%	$ 1,418,951
Supplies	450				450	10,125	4%	9,675
Services	128,273				128,273	559,862	23%	431,589
Total	$ 517,501				$ 517,501	$ 2,377,716	22%	$ 1,860,215

Expenditure by Program	Q1	Q2	Q3	Q4	YTD Actual	Adopted Budget	% of Budget	Remaining
Code Compliance	$ 67,672				$ 67,672	$ 565,557	12%	$ 497,885
Development Services	389,219				389,219	1,361,357	29%	$ 972,138
Long Range Planning	60,611				60,611	450,802	13%	$ 390,191
Total	$ 517,502				$ 517,502	$ 2,377,716	22%	$ 1,860,214

CITY OF MOUNTLAKE TERRACE

GENERAL FUND
FINANCE

GENERAL OPERATING

Expenditure by Object	Q1	Q2	Q3	Q4	YTD Actual	Adopted Budget	% of Budget		Remaining
Salaries and Benefits	$ 252,511				$ 252,511	$ 1,253,218	20%		$ 1,000,707
Supplies	1,982				1,982	14,985	13%		13,003
Services	234,589				234,589	669,761	35%	A	435,172
Reimbursements from Other Funds	(298,321)				(298,321)	(1,261,678)	24%		(963,357)
Total	$ 190,761				$ 190,761	$ 676,286	28%		$ 485,525

A. Insurance costs are paid yearly in Q1.

Expenditure by Program	Q1	Q2	Q3	Q4	YTD Actual	Adopted Budget	% of Budget	Remaining
Financial Services	$ 407,683				$ 407,683	$ 1,367,166	30%	$ 959,483
Utility Billing	81,399				81,399	570,798	14%	489,399
Reimbursements from Other Funds	(298,321)				(298,321)	(1,261,678)	24%	(963,357)
Total	$ 190,761				$ 190,761	$ 676,286	28%	$ 485,525

CITY OF MOUNTLAKE TERRACE

GENERAL FUND
PARKS

GENERAL OPERATING

Expenditure by Object	Q1	Q2	Q3	Q4	YTD Actual	Adopted Budget	% of Budget	Remaining
Salaries and Benefits	$ 231,827				$ 231,827	$ 1,070,072	22%	$ 838,245
Supplies	8,300				8,300	70,300	12%	62,000
Services	108,874				108,874	448,601	24%	339,727
Total	$ 349,001				$ 349,001	$ 1,588,973	22%	$ 1,239,972

CITY OF MOUNTLAKE TERRACE

GENERAL FUND
PROPERTY MANAGEMENT

GENERAL OPERATING

Expenditure by Object	Q1	Q2	Q3	Q4	YTD Actual	Adopted Budget	% of Budget		Remaining
Salaries and Benefits	$ 172,211				$ 172,211	$ 813,361	21%		$ 641,150
Supplies	28,707				28,707	167,800	17%		139,093
Services	287,198				287,198	921,558	31%	A	634,360
Building Improvements	-				-	37,000	0%		37,000
Reimbursements from Other Funds	(39,556)				(39,556)	(158,224)	25%		(118,668)
Total	$ 448,560				$ 448,560	$ 1,781,495	25%		$ 1,332,935

A. Insurance costs are paid yearly in Q1.

Expenditure by Facility	Q1	Q2	Q3	Q4	YTD Actual	Adopted Budget	% of Budget		Remaining
City Hall	$ 74,498				$ 74,498	$ 330,230	23%		$ 255,732
Police Facility	57,563				57,563	226,321	25%		168,758
Fire Facility	31,917				31,917	18,583	172%	A	(13,334)
Public Works Facility	56,707				56,707	195,799	29%		139,092
Library Facility	48,399				48,399	166,728	29%		118,329
Recreation Pavillion	196,919				196,919	821,620	24%		624,701
Ballinger Clubhouse	14,439				14,439	121,891	12%		107,452
Parks Facility	7,674				7,674	58,547	13%		50,873
Reimbursements from Other Funds	(39,556)				(39,556)	(158,224)	25%		(118,668)
Total	$ 448,560				$ 448,560	$ 1,781,495	25%		$ 1,332,935

CITY OF MOUNTLAKE TERRACE

GENERAL FUND
ENGINEERING SERVICES

GENERAL OPERATING

Expenditure by Object	Q1	Q2	Q3	Q4	YTD Actual	Adopted Budget	% of Budget	Remaining
Salaries and Benefits	$ 134,402				$ 134,402	$ 359,446	37%	$ 225,044
Supplies	160				160	2,164	7%	2,004
Services	7,473				7,473	69,446	11%	61,973
Total	$ 142,035				$ 142,035	$ 431,056	33%	$ 289,021

CITY OF MOUNTLAKE TERRACE

GENERAL FUND
MUNICIPAL COURT

GENERAL OPERATING

Expenditure by Object	Q1	Q2	Q3	Q4	YTD Actual	Adopted Budget	% of Budget	Remaining
Salaries and Benefits	$ 11,639				$ 11,639	$ 82,188	14%	$ 70,549
Supplies	-				-	415	0%	415
Services	237,675				237,675	1,608,652	15%	1,370,977
Total	$ 249,314				$ 249,314	$ 1,691,255	15%	$ 1,441,941

Services Expenditures by Program	Q1	Q2	Q3	Q4	YTD Actual	Adopted Budget	% of Budget	Remaining
Hearings Examiner, Violations Bureau	$ 8,072				$ 8,072	$ 28,772	28%	$ 20,700
South District Court	14,841				$ 14,841	216,500	7%	201,659
Attorney Services	120,725				$ 120,725	701,600	17%	580,875
Jail & Home Monitoring Services	94,037				$ 94,037	661,780	14%	567,743
Total	$ 237,675				$ 237,675	$ 1,608,652	15%	$ 1,370,977

CITY OF MOUNTLAKE TERRACE

GENERAL FUND
POLICE

GENERAL OPERATING

Expenditure by Object	Q1	Q2	Q3	Q4	YTD Actual	Adopted Budget	% of Budget	Remaining
Salaries and Benefits	$ 1,524,468				$ 1,524,468	$ 5,684,130	27%	$ 4,159,662
Supplies	2,257				2,257	111,554	2%	109,297
Services	485,820				485,820	1,709,766	28%	1,223,946
Total	$ 2,012,545				$ 2,012,545	$ 7,505,450	27%	$ 5,492,905

Expenditure by Program	Q1	Q2	Q3	Q4	YTD Actual	Adopted Budget	% of Budget	Remaining
LEOFF I	$ 24,285				$ 24,285	$ 288,400	8%	$ 264,115
Command	684,114				684,114	3,282,298	21%	2,598,184
Operations	1,304,146				1,304,146	3,934,752	33%	2,630,606
Total	$ 2,012,545				$ 2,012,545	$ 7,505,450	27%	$ 5,492,905

CITY OF MOUNTLAKE TERRACE

GENERAL FUND TRANSFERS

GENERAL OPERATING

Receiving Fund	Q1	Q2	Q3	Q4	YTD Actual	Adopted Budget	% of Budget	Remaining
Recreation	$ 115,000				$ 115,000	$ 920,000	13%	$ 805,000
Street Operating	-				-	690,000	0%	690,000
Contingency Reserve	-				-	6,466	0%	6,466
General Debt Service	-				-	707,200	0%	707,200
Parks Capital Improvements	-				-	250,000	0%	250,000
Fleet Reserve - General	9,567				9,567	-	-	(9,567)
Fleet Reserve - Parks	15,519				15,519	-	-	(15,519)
Fleet Reserve - Police	34,270				34,270	-	-	(34,270)
Total	$ 174,356				$ 174,356	$ 2,573,666	7%	$ 2,399,310

CITY OF MOUNTLAKE TERRACE

GENERAL FUND BUDGET TO ACTUAL

GENERAL OPERATING

	Q1	Q2	Q3	Q4	YTD Actual	Adopted Budget	% of Budget		Remaining
Revenues and Other Increases									
Property Taxes	$ 81,725				$ 81,725	$ 3,982,093	2%	A	$ (3,900,368)
Sales Taxes	1,258,233				1,258,233	5,127,093	25%		(3,868,860)
Utility Taxes	1,151,149				1,151,149	4,309,928	27%		(3,158,779)
Gambling Taxes	668,438				668,438	1,146,870	58%	B	(478,432)
Other Taxes	19,621				19,621	67,386	29%		(47,765)
Business, Animal and Other Licenses	56,856				56,856	176,646	32%		(119,790)
Development Service Fees	377,352				377,352	2,483,778	15%		(2,106,426)
Cable and Solid Waste Franchise Fees	111,891				111,891	314,747	36%		(202,856)
State Shared and Intergovernmental	215,384				215,384	695,873	31%		(480,489)
Fines and Forfeitures	28,463				28,463	95,152	30%		(66,689)
Other Fees and Charges	51,947				51,947	316,930	16%		(264,983)
Investment Interest	72,406				72,406	300,000	24%		(227,594)
Other Revenues	4,506				4,506	25,000	18%		(20,494)
Retainage and Refundable Deposits	60,773				60,773	-	-		60,773
Revenues and Other Increases Total	$ 4,158,744				$ 4,158,744	$ 19,041,496	22%		$ 14,882,752
Expenditures and Other Decreases									
Salaries and Benefits	$ 3,132,168				$ 3,132,168	$ 13,187,233	24%		$ 10,055,065
Supplies	50,637				50,637	405,668	12%		355,031
Services	1,824,963				1,824,963	7,176,380	25%		5,351,417
Building Improvements	-				-	37,000	0%		37,000
Transfers to Other Funds	174,356				174,356	2,573,666	7%		2,399,310
Reimbursements from Other Funds	(680,039)				(680,039)	(3,607,753)	19%		(2,927,714)
Reimbursement to IT	382,615				382,615	1,530,458	25%		1,147,843
Refunds of Retainage and Deposits	2,000				2,000	-	-		(2,000)
Expenditures and Other Decreases Total	$ 4,886,700				$ 4,886,700	$ 21,302,652	23%		$ 16,415,952
Change in Cash and Investments	$ (727,956)				$ (727,956)	$ (2,261,156)	32%		$ (1,533,200)

A. Property taxes are collected primarily in the 2nd and 4th quarter.

B. Prior quarter gambling taxes for casinos in bankruptcy collected in Q1.

CITY OF MOUNTLAKE TERRACE

HOUSING NEEDS
BUDGET TO ACTUAL

GENERAL OPERATING

	Q1	Q2	Q3	Q4	YTD Actual	Adopted Budget	% of Budget	Remaining
Revenues and Other Increases								
Investment Interest	$ 1,920				$ 1,920	$ 7,000	27%	$ (5,080)
Expenditures and Other Decreases								
Services	$ -				$ -	$ 22,300	0%	$ 22,300
Change in Cash and Investments	$ 1,920				$ 1,920	$ (15,300)	-13%	$ (17,220)
				Ending Cash and Investments Balance	$ 301,287			

CITY OF MOUNTLAKE TERRACE

RECREATION
BUDGET TO ACTUAL

GENERAL OPERATING

	Q1	Q2	Q3	Q4	YTD Actual	Adopted Budget	% of Budget		Remaining
Revenues and Other Increases									
Aquatics	$ 212,576				$ 212,576	$ 1,052,000	20%		$ (839,424)
Athletic Fitness	65,235				65,235	174,900	37%		(109,665)
Youth Programs	612,547				612,547	1,401,060	44%		(788,513)
General Recreation	46,128				46,128	133,750	34%		(87,622)
Investment Interest	1,163				1,163	-	-		1,163
Transfers from Other Funds	115,000				115,000	920,000	13%		(805,000)
Revenues and Other Increases Total	$ 1,052,649				$ 1,052,649	$ 3,681,710	29%		$ 2,629,061
Expenditures and Other Decreases									
Salaries and Benefits	$ 696,128				$ 696,128	$ 3,043,212	23%		$ 2,347,084
Supplies	27,902				27,902	122,425	23%		94,523
Services	506,317				506,317	601,546	84%	A	95,229
Expenditures and Other Decreases Total	$ 1,230,347				1,230,347	$ 3,767,183	33%		$ 2,536,836
Change in Cash and Investments	$ (177,698)				(177,698)	$ (85,473)	208%		$ 92,225

A. Insurance expenses are paid yearly in Q1.

Expenditures by Program	Q1	Q2	Q3	Q4	YTD Actual	Adopted Budget	% of Budget		Remaining
Aquatics	$ 246,967				$ 246,967	$ 1,110,840	22%		$ 863,873
Athletic Fitness	37,866				37,866	212,001	18%		174,135
Youth Program	290,994				290,994	1,246,500	23%		955,506
General Recreation	654,519				654,519	1,197,842	55%	A	543,323
Expenditures and Other Decreases Total	$ 1,230,346				$ 1,230,346	$ 3,767,183	33%		$ 2,536,837

CITY OF MOUNTLAKE TERRACE

SOLID WASTE SERVICE
BUDGET TO ACTUAL

GENERAL OPERATING

	Q1	Q2	Q3	Q4	YTD Actual	Adopted Budget	% of Budget	Remaining
Revenues and Other Increases								
Utility Taxes	$ 12,250				$ 12,250	$ 49,000	25%	$ (36,750)
Expenditures and Other Decreases								
Solid Waste Exemptions	$ 29,231				$ 29,231	$ 53,574	55%	$ 24,343
Change in Cash and Investments	$ (16,981)				$ (16,981)	$ (4,574)	371%	$ 12,407
				Ending Cash and Investments Balance	$ 66,208			

CITY OF MOUNTLAKE TERRACE

STREET OPERATING BUDGET TO ACTUAL

GENERAL OPERATING

	Q1	Q2	Q3	Q4	YTD Actual	Adopted Budget	% of Budget	Remaining
Revenues and Other Increases								
TBD License Fee	$ 79,692				$ 79,692	$ -	-	$ 79,692
MV Fuel Tax	56,679				56,679	428,263	13%	(371,584)
Multi-Modal Distribution (ESSB 5987)	27,466				27,466	15,208	181%	12,258
Road Impact Fee - Solid Waste Provider	48,149				48,149	137,985	35%	(89,836)
Investment Interest	5,830				5,830	-	-	5,830
Other Revenues	-				-	10,927	0%	(10,927)
Transfers from Other Funds	-				-	690,000	0%	(690,000)
Revenues and Other Increases Total	$ 217,816				$ 217,816	$ 1,282,383	17%	$ 1,064,567
Expenditures and Other Decreases								
Salaries and Benefits	$ 146,205				$ 146,205	$ 802,875	18%	$ 656,670
Supplies	5,697				5,697	218,200	3%	212,503
Services	116,249				116,249	799,413	15%	683,164
Transfers to Other Funds	17,001				17,001	-	-	(17,001)
Expenditures and Other Decreases Total	$ 285,152				$ 285,152	$ 1,820,488	16%	$ 1,535,336
Change in Cash and Investments	$ (67,336)				(67,336)	$ (538,105)	13%	$ (470,769)

Expenditures by Program	Q1	Q2	Q3	Q4	YTD Actual	Adopted Budget	% of Budget	Remaining
Street Maintenance - Engineering	$ 29,486				$ 29,486	$ 111,290	26%	$ 81,804
Street Maintenance	190,070				190,070	1,308,163	15%	1,118,093
Right of Way Maintenance	6,569				6,569	72,692	9%	66,123
Street Lighting	23,343				23,343	179,504	13%	156,161
Traffic Control	18,683				18,683	148,839	13%	130,156
Transfers	17,001				17,001	-	-	(17,001)
Expenditures and Other Decreases Total	$ 285,152				$ 285,152	$ 1,820,488	16%	$ 1,535,336

CITY OF MOUNTLAKE TERRACE

OPIOID SETTLEMENT
BUDGET TO ACTUAL

GENERAL OPERATING

	Q1	Q2	Q3	Q4	YTD Actual	Adopted Budget	% of Budget	Remaining
Revenues and Other Increases								
Judgements and Settlements	$ -				$ -	$ 40,000	0%	$ (40,000)
Expenditures and Other Decreases								
SCOUT Program	$ 42,331				$ 42,331	$ 150,000	28%	$ 107,669
Change in Cash and Investments	$ (42,331)				$ (42,331)	$ (110,000)	38%	$ (67,669)
				Ending Cash and Investments Balance	287,740			

CITY OF MOUNTLAKE TERRACE

HOTEL/MOTEL TAX
BUDGET TO ACTUAL

GENERAL OPERATING

	Q1	Q2	Q3	Q4	YTD Actual	Adopted Budget	% of Budget	Remaining
Revenues and Other Increases								
Hotel/Motel Tax	$ 12,393				$ 12,393	$ 55,000	23%	$ (42,607)
Investment Interest	2,056				2,056	3,000	69%	(944)
Revenues and Other Increases Total	$ 14,449				$ 14,449	$ 58,000	25%	$ 43,551
Expenditures and Other Decreases								
Lodging Tax Grants	$ 10,000				$ 10,000	$ 50,000	20%	$ 40,000
Change in Cash and Investments	$ 4,449				$ 4,449	$ 8,000	56%	$ 3,551
				Ending Cash and Investments Balance	$ 245,804			

CITY OF MOUNTLAKE TERRACE

FLEET
BUDGET TO ACTUAL

GENERAL OPERATING

	Q1	Q2	Q3	Q4	YTD Actual	Adopted Budget	% of Budget		Remaining
Revenues and Other Increases									
Reimbursements from Other Funds	$ 184,812				$ 184,812	$ 2,592,344	7%	A	$ (2,407,532)
Reimbursements from Other Gov.	29,832				29,832	112,971	26%		(83,139)
Investment Interest	20,544				20,544	-	-		20,544
Sale of Capital Assets	1,548				1,548	12,000	13%		(10,452)
Other Revenues	1,482				1,482	-	-	B	1,482
Revenues and Other Increases Total	$ 238,218				$ 238,218	$ 2,717,315	9%		$ 2,479,097
Expenditures and Other Decreases									
Salaries and Benefits	$ 90,667				$ 90,667	$ 378,491	24%		$ 287,824
Supplies	49,795				49,795	346,360	14%		296,565
Services	122,109				122,109	386,524	32%		264,415
Capital Outlays	120,886				120,886	467,060	26%		346,174
Expenditures and Other Decreases Total	$ 383,457				$ 383,457	$ 1,578,435	24%		$ 1,194,978
Change in Cash and Investments	$ (145,239)				$ (145,239)	$ 1,138,880	-13%		$ 1,284,119

A. Reimbursement were made for operating portion of the budget. The remaining was transferred to Fleet Reserve Funds.

B. Insurance is paid yearly in Q1.

CITY OF MOUNTLAKE TERRACE

INFORMATION TECH BUDGET TO ACTUAL

GENERAL OPERATING

	Q1	Q2	Q3	Q4	YTD Actual	Adopted Budget	% of Budget		Remaining
Revenues and Other Increases									
Reimbursements from Other Funds	$ 534,985				$ 534,985	$ 1,530,458	35%		$ (995,473)
Expenditures and Other Decreases									
Salaries and Benefits	$ 140,141				$ 140,141	$ 670,048	21%		$ 529,907
Supplies	48,143				48,143	240,610	20%		192,467
Services	331,300				331,300	560,340	59%	A	229,040
Equipment Replacement	-				-	59,460	0%		59,460
Expenditures and Other Decreases Total	$ 519,584				$ 519,584	$ 1,530,458	34%		$ 1,010,874
Change in Cash and Investments	$ 15,401				$ 15,401	$ -	-		$ (2,006,347)

A. Insurance is paid yearly in Q1.

CITY OF MOUNTLAKE TERRACE

SEWER UTILITY BUDGET TO ACTUAL

UTILITY

	Q1	Q2	Q3	Q4	YTD Actual	Adopted Budget	% of Budget	Remaining
Revenues and Other Increases								
Sewer Service	$ 2,060,655				$ 2,060,655	$ 8,564,269	24%	$ (6,503,614)
Capital Facility Charges (Buy-In Fees)	8,900				8,900	250,460	4%	(241,560)
Investment Interest	47,164				47,164	40,000	118%	7,164
Other Revenues	-				-	3,808	0%	(3,808)
Revenues and Other Increases Total	$ 2,116,719				$ 2,116,719	$ 8,858,537	24%	$ 6,741,818
Expenditures and Other Decreases								
Salaries and Benefits	$ 204,854				$ 204,854	$ 1,082,152	19%	$ 877,298
Supplies	7,679				7,679	187,008	4%	179,329
Services	995,319				995,319	6,799,918	15%	5,804,599
Transfers to Other Funds	3,866,385				3,866,385	3,826,070	101%	(40,315)
Expenditures and Other Decreases Total	$ 5,074,237				$ 5,074,237	$ 11,895,148	43%	$ 6,820,911
Change in Cash and Investments	$ (2,957,518)				$ (2,957,518)	$ (3,036,611)	97%	$ (79,093)

Expenditures by Program	Q1	Q2	Q3	Q4	YTD Actual	Adopted Budget	% of Budget	Remaining
Sewage Treatment	$ 327,272				$ 327,272	$ 2,860,479	11%	$ 2,533,207
Collection System Maintenance	800,696				800,696	3,574,420	22%	2,773,724
Engineering Services	79,884				79,884	1,634,179	5%	1,554,295
Transfer to Sewer Construction	3,570,715				3,570,715	3,570,715	100%	-
Transfer to Utility Debt Service	255,355				255,355	255,355	100%	-
Transfer to Fleet Reserve	40,315				40,315	-	-	(40,315)
Expenditures and Other Decreases Total	$ 5,074,237				$ 5,074,237	$ 11,895,148	43%	$ 6,820,911

CITY OF MOUNTLAKE TERRACE

WATER UTILITY
BUDGET TO ACTUAL

UTILITY

	Q1	Q2	Q3	Q4	YTD Actual	Adopted Budget	% of Budget	Remaining
Revenues and Other Increases								
Water Service	$ 1,702,166				$ 1,702,166	$ 8,199,110	21%	$ (6,496,944)
Capital Facility Charges (Buy-In Fees)	63,738				63,738	645,460	10%	(581,722)
Investment Interest	83,396				83,396	80,000	104%	3,396
Other Revenues	1,002				1,002	14,198	7%	(13,196)
Revenues and Other Increases Total	$ 1,850,302				$ 1,850,302	$ 8,938,768	21%	$ 7,088,466
Expenditures and Other Decreases								
Salaries and Benefits	$ 274,999				$ 274,999	$ 1,231,118	22%	$ 956,119
Supplies	36,862				36,862	285,172	13%	248,310
Services	1,157,788				1,157,788	5,670,327	20%	4,512,539
Transfers to Other Funds	8,608,883				8,608,883	8,576,716	100%	(32,167)
Expenditures and Other Decreases Total	$ 10,078,532				$ 10,078,532	$ 15,763,333	64%	$ 5,684,801
Change in Cash and Investments	$ (8,228,230)				$ (8,228,230)	$ (6,824,565)	121%	$ 1,403,665

Expenditures by Program	Q1	Q2	Q3	Q4	YTD Actual	Adopted Budget	% of Budget	Remaining
Water Supply	$ 283,392				$ 283,392	$ 1,930,655	15%	$ 1,647,263
Water Distribution System Maintenance	994,059				994,059	3,597,641	28%	2,603,582
Engineering Services	192,198				192,198	1,658,321	12%	1,466,123
Transfer to Water Construction	7,648,752				7,648,752	7,648,752	100%	-
Transfer to Utility Debt Service	927,964				927,964	927,964	100%	-
Transfer to Fleet Reserve	32,167				32,167	-	-	(32,167)
Expenditures and Other Decreases Total	$ 10,078,532				$ 10,078,532	$ 15,763,333	64%	$ 5,684,801

CITY OF MOUNTLAKE TERRACE

STORMWATER UTILITY BUDGET TO ACTUAL

UTILITY

	Q1	Q2	Q3	Q4	YTD Actual	Adopted Budget	% of Budget	Remaining
Revenues and Other Increases								
Stormwater Service	$ 1,322,612				$ 1,322,612	$ 5,153,732	26%	$ (3,831,120)
Capital Facility Charges (Buy-In Fees)	-				-	59,754	0%	(59,754)
Grants	-				-	115,000	0%	(115,000)
Investment Interest	46,390				46,390	115,000	40%	(68,610)
Revenues and Other Increases Total	$ 1,369,002				$ 1,369,002	$ 5,443,486	25%	$ 4,074,484
Expenditures and Other Decreases								
Salaries and Benefits	$ 257,563				$ 257,563	$ 1,160,520	22%	$ 902,957
Supplies	5,688				5,688	64,888	9%	59,200
Services	545,135				545,135	2,069,989	26%	1,524,854
Transfers to Other Funds	5,653,114				5,653,114	5,611,503	101%	(41,611)
Expenditures and Other Decreases Total	$ 6,461,500				$ 6,461,500	$ 8,906,900	73%	$ 2,445,400
Change in Cash and Investments	$ (5,092,498)				$ (5,092,498)	$ (3,463,414)	147%	$ 1,629,084

Expenditures by Program	Q1	Q2	Q3	Q4	YTD Actual	Adopted Budget	% of Budget	Remaining
Stormwater Maintenance & Compliance	$ 642,776				$ 642,776	$ 2,926,380	22%	$ 2,283,604
Stormwater Engineering	165,610				165,610	369,017	45%	203,407
Transfer to Stormwater Construction	5,048,000				5,048,000	5,048,000	100%	-
Transfer to Utility Debt Service	563,503				563,503	563,503	100%	-
Transfer to Fleet Reserve	41,611				41,611	-	-	(41,611)
Expenditures and Other Decreases Total	$ 6,461,500				$ 6,461,500	$ 8,906,900	73%	$ 2,445,400

CITY OF MOUNTLAKE TERRACE

STREET CONSTRUCTION BUDGET TO ACTUAL

CAPITAL PROJECTS

	Q1	Q2	Q3	Q4	YTD Actual	Adopted Budget	% of Budget	Remaining
Revenues and Other Increases								
MV Fuel Tax and Multimodal	$ 33,551				$ 33,551	$ 321,913	10%	$ (288,362)
Road Impact Fee - Solid Waste Provider	48,148				48,148	127,880	38%	(79,732)
TBD License Fee	-				-	10,311	0%	(10,311)
Impact Fees	-				-	86,223	0%	(86,223)
Investment Interest	42,989				42,989	27,586	156%	15,403
Grants	-				-	7,944,000	0%	(7,944,000)
Transfers from Other Funds	-				-	500,000	0%	(500,000)
Revenues and Other Increases Total	$ 124,688				$ 124,688	$ 9,017,913	1%	$ 8,893,225
Expenditures and Other Decreases	$ 1,004,277				$ 1,004,277	$ 11,911,364	8%	$ 10,907,087
Change in Cash and Investments	$ (879,589)				$ (879,589)	$ (2,893,451)	30%	$ (2,013,862)

Expenditures by Project	Q1	Q2	Q3	Q4	YTD Actual	Adopted Budget	% of Budget	Remaining
Main Street	$ 846,092				$ 846,092	$ 11,884,242	7%	$ 11,038,150
66th Ave W Pavement Reconstruction	884				884	-	-	(884)
Veteran's Park Trail System	438				438	-	-	(438)
Engineering Services (Capital)	156,863				156,863	-	-	(156,863)
Transfer to Utilty Debt Service	-				-	27,122	0%	27,122
Total Expenditures and Other Decreases	$ 1,004,277				1,004,277	$ 11,911,364	8%	$ 10,907,087

CITY OF MOUNTLAKE TERRACE

PARKS CAPITAL IMPROV. BUDGET TO ACTUAL

CAPITAL PROJECTS

	Q1	Q2	Q3	Q4	YTD Actual	Adopted Budget	% of Budget	Remaining
Revenues and Other Increases								
Cable P.E.G. Fees	$ 1,359				$ 1,359	$ -	-	$ 1,359
Park Impact Fees	-				-	953,295	0%	(953,295)
Grants	380,434				380,434	-	-	380,434
Investment Interest	14,298				14,298	-	-	14,298
Other Revenues	33,518				33,518	1,570,079	2%	(1,536,561)
Transfers from Other Funds	-				-	1,300,000	0%	(1,300,000)
Revenues and Other Increases Total	$ 429,609				$ 429,609	$ 3,823,374	11%	$ 3,393,765
Expenditures and Other Decreases	$ 85,597				$ 85,597	$ 2,870,000	3%	$ 2,784,403
Change in Cash and Investments	$ 344,012				$ 344,012	$ 953,374	36%	$ 609,362

Expenditures by Project	Q1	Q2	Q3	Q4	YTD Actual	Adopted Budget	% of Budget	Remaining
Small Park Amenities	$ -				$ -	$ 20,000	0%	$ 20,000
Veteran's Memorial Park - Upper Palteau	-				-	290,000	0%	290,000
Recreation Master Plan	-				-	150,000	0%	150,000
Transit Connection Corridor Project	33,327				33,327	110,000	30%	76,673
Evergreen Playfields 4&5	-				-	150,000	0%	150,000
Pavilion Pool Liner Repair	-				-	200,000	0%	200,000
Evergreen Playfield 3	286				286	-	-	(286)
Sound Transit Tree Mitigation	47,013				47,013	-	-	(47,013)
Ballinger Viewing Platform Trails	2,231				2,231	-	-	(2,231)
ARPA	1,272				1,272	-	-	(1,272)
Engineering Services (Capital)	1,469				1,469	250,000	1%	248,531
Transfer to Facilities Construction	-				-	1,700,000	0%	1,700,000
Total Expenditures and Other Decreases	$ 85,598				85,598	$ 2,870,000	3%	$ 2,784,402

CITY OF MOUNTLAKE TERRACE

REAL ESTATE EXCISE TAX BUDGET TO ACTUAL

CAPITAL PROJECTS

	Q1	Q2	Q3	Q4	YTD Actual	Adopted Budget	% of Budget	Remaining
Revenues and Other Increases								
Real Estate Tax Revenue (1st 1/4%)	$ 67,700				$ 67,700	$ 500,000	14%	$ (432,300)
Real Estate Tax Revenue (2nd 1/4%)	67,700				67,700	500,000	14%	(432,300)
Investment Interest	3,038				3,038	25,000	12%	(21,962)
Revenues and Other Increases Total	$ 138,438				$ 138,438	$ 1,025,000	14%	$ 886,562
Expenditures and Other Decreases								
Transfer to Street Construction	$ -				$ -	$ 500,000	0%	$ 500,000
Transfer to Parks Capital Improv.	-				-	1,050,000	0%	1,050,000
Total Expenditures and Other Decreases	$ -				$ -	$ 1,550,000	0%	$ 1,550,000
Change in Cash and Investments	$ 138,438				$ 138,438	$ (525,000)	-26%	$ (663,438)

CITY OF MOUNTLAKE TERRACE

FACILITIES CONSTRUCT. BUDGET TO ACTUAL

CAPITAL PROJECTS

	Q1	Q2	Q3	Q4	YTD Actual	Adopted Budget	% of Budget	Remaining
Revenues and Other Increases								
Grants	$ 81,000				$ 81,000	$ 1,150,000	7%	$ (1,069,000)
Transfers from Other Funds	-				-	100,000	0%	(100,000)
Revenues and Other Increases Total	$ 81,000				$ 81,000	$ 1,250,000	6%	$ 1,169,000
Expenditures and Other Decreases	$ 138,750				$ 138,750	$ 1,250,000	11%	$ 1,111,250
Change in Cash and Investments	$ (57,750)				$ (57,750)	$ -	-	$ 57,750

Expenditures by Project	Q1	Q2	Q3	Q4	YTD Actual	Adopted Budget	% of Budget	Remaining
Library Roof and HVAC	$ -				$ -	$ 1,250,000	0%	$ 1,250,000
Generator Installation	138,750				138,750	-	-	(138,750)
Total Expenditures and Other Decreases	$ 138,750				$ 138,750	$ 1,250,000	11%	$ 1,111,250

CITY OF MOUNTLAKE TERRACE

STORMWATER CONST. BUDGET TO ACTUAL

CAPITAL PROJECTS

	Q1	Q2	Q3	Q4	YTD Actual	Adopted Budget	% of Budget	Remaining
Revenues and Other Increases								
Transfers from Other Funds	$ 5,048,000				$ 5,048,000	$ 5,048,000	100%	$ -
Expenditures and Other Decreases	$ 1,116				$ 1,116	$ 5,048,000	0%	$ 5,046,884
Change in Cash and Investments	$ 5,046,884				$ 5,046,884	$ -	-	$ (5,046,884)

Expenditures by Project	Q1	Q2	Q3	Q4	YTD Actual	Adopted Budget	% of Budget	Remaining
220th Water Quality Pipe Repair	$ -				$ -	$ 3,755,000	0%	$ 3,755,000
Main Street Construction	-				-	1,293,000	0%	1,293,000
Hall Creek 220th Biofilter	1,116				1,116	-	-	(1,116)
Total Expenditures and Other Decreases	$ 1,116				1,116	$ 5,048,000	0%	$ 5,046,884

CITY OF MOUNTLAKE TERRACE

SEWER CONSTRUCTION BUDGET TO ACTUAL

CAPITAL PROJECTS

	Q1	Q2	Q3	Q4	YTD Actual	Adopted Budget	% of Budget	Remaining
Revenues and Other Increases								
Transfers from Other Funds	$ 3,570,715				$ 3,570,715	$ 3,570,715	100%	$ -
Expenditures and Other Decreases	$ -				$ -	$ 3,570,713	0%	$ 3,570,713
Change in Cash and Investments	$ 3,570,715				$ 3,570,715	$ 2	N/A	$ (3,570,713)

Expenditures by Project	Q1	Q2	Q3	Q4	YTD Actual	Adopted Budget	% of Budget	Remaining
Cedar Grove Edmonds Waste Water Treatment Plant & Sewer Replacement	$ -				$ -	$ 3,370,713	0%	$ 3,370,713
Main Street Construction	-				-	200,000	0%	200,000
Total Expenditures and Other Decreases	$ -				-	$ 3,570,713	0%	$ 3,570,713

CITY OF MOUNTLAKE TERRACE

WATER CONSTRUCTION BUDGET TO ACTUAL

CAPITAL PROJECTS

	Q1	Q2	Q3	Q4	YTD Actual	Adopted Budget	% of Budget	Remaining
Revenues and Other Increases								
Transfers from Other Funds	$ 7,648,752				$ 7,648,752	$ 7,648,752	100%	$ -
Expenditures and Other Decreases	$ 43,384				$ 43,384	$ 7,479,891	1%	$ 7,436,507
Change in Cash and Investments	$ 7,605,368				$ 7,605,368	$ 168,861	N/A	$ (7,436,507)

Expenditures by Project	Q1	Q2	Q3	Q4	YTD Actual	Adopted Budget	% of Budget	Remaining
Water System and Mains	$ 43,384				$ 43,384	$ 6,479,891	1%	$ 6,436,507
Main Street Construction	-				-	1,000,000	0%	1,000,000
Total Expenditures and Other Decreases	$ 43,384				43,384	$ 7,479,891	1%	$ 7,436,507

CITY OF MOUNTLAKE TERRACE

YEAR END DEBT OUTSTANDING

Bonds	Maturity Date	Principal Payments	Dec. 31, 2026 Ending Balance
General Obligation UTGO 2018	12/1/2047	$ 270,000	$ 9,490,000
Revenue Bond 2012 - Water/Storm	12/1/2032	280,000	1,865,000
Revenue Bond 2014 - Water/Storm	12/1/2034	320,000	3,060,001
Revenue Bond 2020 Refunding - Water/Storm/Sewer	12/1/2030	333,200	1,371,800
Revenue Bond 2020 - Sewer	12/1/2035	156,800	1,598,200
		$ 1,360,000	$ 17,385,001

Loans	Maturity Date	Principal Payments [A]	Dec. 31, 2026 Ending Balance
Public Works Trust Fund Loan	6/1/2041	$ 302,638	$ 4,539,562
Public Works Assistance Fund Loan 01-2024	7/1/2034	71,374	491,773
		$ 374,012	$ 5,031,335

A. Anticipated Public Works loans balances do not include possible draw downs of additional funds in current year.

CITY OF MOUNTLAKE TERRACE

DISCUSSION & QUESTIONS

CITY OF MOUNTLAKE TERRACE

Thank you

CITY OF MOUNTLAKE TERRACE

CITY OF MOUNTLAKE TERRACE

STAFF REPORT

To: Mountlake Terrace City Council
From: Gary Schimek, Public Works Director, Man Truong
Meeting Date: May 28, 2026
Subject: Review Bid Award for Westside Water Main Phase II

Required Reviews:

Jennifer Joki	Created/Initiated - 05/19/2026
Gary Schimek	Approved - 05/19/2026
Sirke Salminen	Approved - 05/19/2026
Hillary Evans	Approved - 05/20/2026
Carolyn Hope	Final Approval - 05/21/2026

Council Goal(s):
Responsible Governance to Ensure Desired Level of Service

Legislative History:
April 1, 2025 – The Westside Watermain Phase II and Overly project was out to bid.
April 23, 2025 – Bids were opened and tabulated.
April 24, 2025 – Second lowest bidder launched a formal bid protest.
May 12, 2025 – Bid protest was resolved and low bidder was selected.

Subject Summary:
Much of the City's water utility system was built in the 1950s–1970s and now requires replacement to reduce leaks and meet growing service demands.

Based on the Water Comprehensive Plan, engineering assessments, and opportunities to coordinate with other projects, several high-priority water mains on the west side were grouped into the Westside Watermain Phase II and Overlay Project, advertised on April 1, 2026. Project locations are shown in Figure 1.

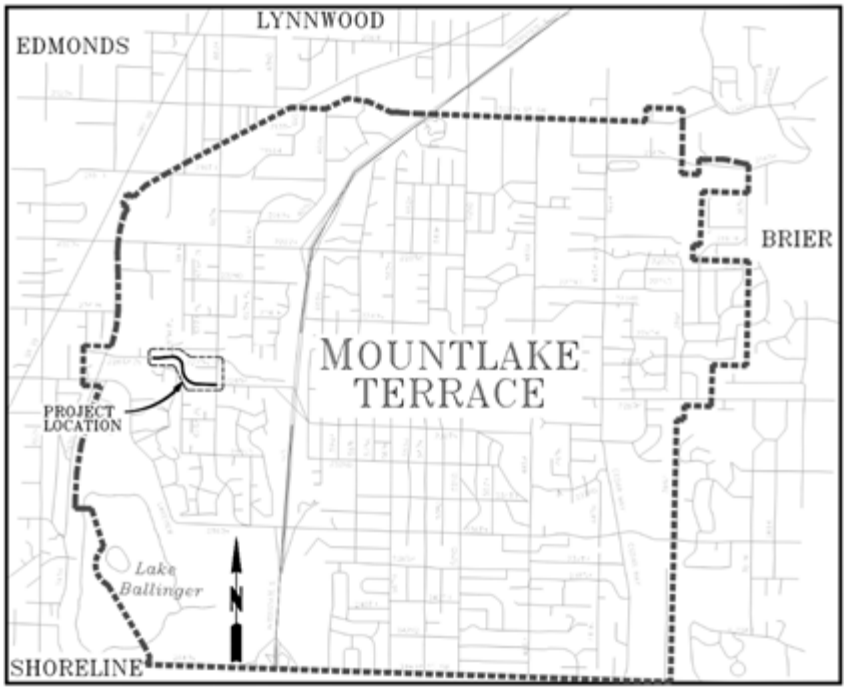

Figure 1. Westside Watermain Phase II and Overlay Project Location

Bids were opened on Thursday, April 23, 2026. The four bids received, along with the engineer's estimate, are as follows:

	Eadon Prairie Construction	**Laser Underground**	**Granite Construction**	**Kar-Vel Construction**	**Engineer's Estimate**
TOTAL BID	***$2,394,855.26***	***$2,397,830.82***	***$2,690,155.11***	***$3,547,742.64***	***$2,622,068.09***
Rank	***1***	2	3	4	
Schedule A Base Bid Total	$1,655,012.00	$1,254,703.00	$1,970,601.00	$2,413,187.00	$1,822,477.00
Schedule B Base Bid Total	$564,067.00	$1,009,384.00	$510,641.00	$879,171.00	$606,231.00
Schedule C Base Bid Total	$2,000.00	$2,000.00	$2,000.00	$2,000.00	$2,000.00
Subtotal (A+B+C)	$2,221,079.00	$2,266,087.00	$2,483,242.00	$3,294,358.00	$2,430,708.00
WA Sales Tax @ 10.5% on Schedule A	$173,776.26	$131,743.82	$206,913.11	$253,384.64	$191,360.09

City staff reviewed and confirmed that the bidder with the lowest bid, Eadon Prairie Construction, meets the statutory bidder responsibility requirements and has the lowest responsive bid. Based on a review and verification of the company's Supplemental Responsibility Criteria which includes agency references, Eadon Prairie Construction was judged capable of performing the work.

The lowest responsive bid of $2,394,855.26 is 9 percent below the engineer's construction estimate. Total anticipated costs for the project are $2,945,672, including city staff costs for planning, design, permitting, and contingency, will be well below the $4,159,505 budgeted for the project in the 2025-2026 biennium. The project is being financed by a Washington State Public Works Board loan repaid by water utility service fees.

Construction is expected to begin within approximately two weeks following contract execution, beginning with work along 226th Pl SW in anticipation of the water main replacement and pavement reconstruction project. The project is anticipated to be completed within approximately six months.

Funding Sources	Amount
2025/2026 Project Budget	$1,998
Department of Commerce Public Works Loan	$2,160
Total	**$4,159**

Proposed 2026 Expenditures

Expenditure	Amount
Planning, Final Design and Permitting (3% of construction)	$71
Construction	**$2,394**
Contingency (20% of construction)	$478
Total	**$2,945**

Financial/Budget Impacts:

Budget Amendment Required? No

Budget and Sources:	$2,160,743 Public Works Loan $784,929 Water Fund
Expenditure:	$2,945,672
New Appropriation Required + Sources:	No

Additional Financial Information:

N/A

Community Notifications:

City Council Agenda

If "Other," please specify:

Board/Commission Recommendation:

N/A

Staff Recommendation:
Authorize the City Manager to award and execute the Westside Water Main Phase II and Overlay construction project with Eadon Prairie Construction in the amount not to exceed $2,394,855.26 and authorize up to $2,945,672 for total project costs. This can be accomplished by adding it to the June 4th, 2026 Consent Agenda.

Council Motion:
N/A

Attachments:
1. Bid Tab - MLT Westside Water Main Phase II and Overlay
2. Contract - MLT Westside Watermain Phase II and Overlay

Westside Water Main Phase II and Overlay (#10129792)
Owner: Mountlake Terrace WA, City of
Solicitor: Mountlake Terrace WA, City of
04/23/2026 02:00 PM PDT
FINAL

						Engineer Estimate		Eadon Prairie Construction		Laser Underground		Granite Construction		Kar-Vel Construction	
Section Title	Line Item	Item Code	Item Description	UofM	Quantity	Unit Price	Extension	Unit Price	Extension	Unit Price	Extension	Unit Price	Extension	Unit Price	Extension
Schedule A															
	1	A-1	Minor Changes	CALC	1	$ 25,000.00	$ 25,000.00	$ 25,000.00	$ 25,000.00	$ 25,000.00	$ 25,000.00	$ 25,000.00	$ 25,000.00	$ 25,000.00	$ 25,000.00
	2	A-2	Roadway Surveying	LS	1	$ 15,000.00	$ 15,000.00	$ 15,000.00	$ 15,000.00	$ 5,000.00	$ 5,000.00	$ 9,000.00	$ 9,000.00	$ 30,000.00	$ 30,000.00
	3	A-3	Record Drawing (Minimum Bid = $1000.00)	LS	1	$ 1,000.00	$ 1,000.00	$ 2,500.00	$ 2,500.00	$ 1,000.00	$ 1,000.00	$ 1,000.00	$ 1,000.00	$ 3,000.00	$ 3,000.00
	4	A-4	SPCC Plan	LS	1	$ 1,500.00	$ 1,500.00	$ 2,500.00	$ 2,500.00	$ 1,000.00	$ 1,000.00	$ 1,000.00	$ 1,000.00	$ 5,000.00	$ 5,000.00
	5	A-5	Potholing	EA	10	$ 1,500.00	$ 15,000.00	$ 800.00	$ 8,000.00	$ 200.00	$ 2,000.00	$ 1,000.00	$ 10,000.00	$ 1,200.00	$ 12,000.00
	6	A-6	Mobilization	LS	1	$ 165,680.00	$ 165,680.00	$ 158,000.00	$ 158,000.00	$ 25,000.00	$ 25,000.00	$ 180,000.00	$ 180,000.00	$ 230,000.00	$ 230,000.00
	7	A-7	Project Temporary Traffic Control	LS	1	$ 120,000.00	$ 120,000.00	$ 18,000.00	$ 18,000.00	$ 10,000.00	$ 10,000.00	$ 275,000.00	$ 275,000.00	$ 450,000.00	$ 450,000.00
	8	A-8	Removal of Structures and Obstructions	LS	1	$ 65,000.00	$ 65,000.00	$ 12,500.00	$ 12,500.00	$ 38,000.00	$ 38,000.00	$ 13,000.00	$ 13,000.00	$ 90,000.00	$ 90,000.00
	9	A-9	Remove and Dispose of Existing Concrete Traffic Curb and Gutter	LF	245	$ 25.00	$ 6,125.00	$ 28.00	$ 6,860.00	$ 24.00	$ 5,880.00	$ 15.00	$ 3,675.00	$ 10.00	$ 2,450.00
	10	A-10	Remove and Dispose of Existing Concrete Sidewalk	SY	165	$ 35.00	$ 5,775.00	$ 58.00	$ 9,570.00	$ 40.00	$ 6,600.00	$ 43.00	$ 7,095.00	$ 15.00	$ 2,475.00
	11	A-11	Crushed Surfacing Top Course Incl. Haul	TON	1060	$ 45.00	$ 47,700.00	$ 73.00	$ 77,380.00	$ 70.00	$ 74,200.00	$ 56.00	$ 59,360.00	$ 1.00	$ 1,060.00
	12	A-12	Commercial HMA for Pavement Repair Class Â½â€ PG 58H-22 Incl. Excavation and Haul	TON	980	$ 180.00	$ 176,400.00	$ 205.00	$ 200,900.00	$ 240.00	$ 235,200.00	$ 230.00	$ 225,400.00	$ 100.00	$ 98,000.00
	13	A-13	Asphalt Cost Price Adjustment	CALC	1	$ 1,937.00	$ 1,937.00	$ 1,937.00	$ 1,937.00	$ 1,937.00	$ 1,937.00	$ 1,937.00	$ 1,937.00	$ 1,937.00	$ 1,937.00
	14	A-14	Commercial HMA or Asphalt Treated Base for Temporary Patch	TON	286	$ 225.00	$ 64,350.00	$ 325.00	$ 92,950.00	$ 1.00	$ 286.00	$ 259.00	$ 74,074.00	$ 10.00	$ 2,860.00
	15	A-15	Gravel Borrow Incl. Haul for Water and Sewer	TON	2515	$ 40.00	$ 100,600.00	$ 70.00	$ 176,050.00	$ 60.00	$ 150,900.00	$ 18.00	$ 45,270.00	$ 1.00	$ 2,515.00
	16	A-16	Foundation Materials Class A Incl. Haul for Water and Sewer	TON	60	$ 50.00	$ 3,000.00	$ 75.00	$ 4,500.00	$ 100.00	$ 6,000.00	$ 185.00	$ 11,100.00	$ 100.00	$ 6,000.00
	17	A-17	Trench Safety and Shoring or Extra Excavation Class A and Class B for Water and Sewer	LS	1	$ 35,000.00	$ 35,000.00	$ 1,000.00	$ 1,000.00	$ 15,000.00	$ 15,000.00	$ 15,000.00	$ 15,000.00	$ 15,000.00	$ 15,000.00
	18	A-18	Ductile Iron Pipe for Water Main, Class 52, 8 Inch Diam.	LF	12	$ 180.00	$ 2,160.00	$ 400.00	$ 4,800.00	$ 150.00	$ 1,800.00	$ 560.00	$ 6,720.00	$ 270.00	$ 3,240.00
	19	A-19	Ductile Iron Pipe for Water Main, Class 52, 12 Inch Diam.	LF	1640	$ 160.00	$ 262,400.00	$ 239.00	$ 391,960.00	$ 170.00	$ 278,800.00	$ 265.00	$ 434,600.00	$ 330.00	$ 541,200.00
	20	A-20	Cut and Cap Existing Water Main	EA	4	$ 3,500.00	$ 14,000.00	$ 2,500.00	$ 10,000.00	$ 1,000.00	$ 4,000.00	$ 5,500.00	$ 22,000.00	$ 12,000.00	$ 48,000.00
	21	A-21	Gate Valve, 8 Inch	EA	1	$ 4,300.00	$ 4,300.00	$ 4,850.00	$ 4,850.00	$ 2,500.00	$ 2,500.00	$ 3,800.00	$ 3,800.00	$ 3,500.00	$ 3,500.00
	22	A-22	Gate Valve, 12 Inch	EA	7	$ 5,500.00	$ 38,500.00	$ 7,750.00	$ 54,250.00	$ 4,000.00	$ 28,000.00	$ 6,600.00	$ 46,200.00	$ 7,000.00	$ 49,000.00
	23	A-23	Combination Air Release/Air Vacuum Valve Assembly, 1 Inch	EA	1	$ 7,000.00	$ 7,000.00	$ 6,000.00	$ 6,000.00	$ 6,500.00	$ 6,500.00	$ 9,000.00	$ 9,000.00	$ 10,000.00	$ 10,000.00
	24	A-24	Pressure Reducing Valve (PRV) Assembly	EA	1	$ 425,000.00	$ 425,000.00	$ 175,000.00	$ 175,000.00	$ 100,000.00	$ 100,000.00	$ 218,000.00	$ 218,000.00	$ 300,000.00	$ 300,000.00
	25	A-25	Abandon Existing Pressure Reducing Valve (PRV) Assembly	EA	1	$ 25,000.00	$ 25,000.00	$ 8,500.00	$ 8,500.00	$ 10,000.00	$ 10,000.00	$ 15,000.00	$ 15,000.00	$ 30,000.00	$ 30,000.00
	26	A-26	Fire Hydrant Assembly	EA	4	$ 6,000.00	$ 24,000.00	$ 11,000.00	$ 44,000.00	$ 12,000.00	$ 48,000.00	$ 16,000.00	$ 64,000.00	$ 16,000.00	$ 64,000.00
	27	A-27	Remove and Dispose of Existing Fire Hydrant Assembly	EA	4	$ 2,100.00	$ 8,400.00	$ 1,850.00	$ 7,400.00	$ 1,000.00	$ 4,000.00	$ 825.00	$ 3,300.00	$ 4,000.00	$ 16,000.00
	28	A-28	1.0 Inch Diam. Copper Pipe Service Connection, Short Side	EA	14	$ 3,000.00	$ 42,000.00	$ 2,600.00	$ 36,400.00	$ 3,200.00	$ 44,800.00	$ 3,700.00	$ 51,800.00	$ 5,000.00	$ 70,000.00
	29	A-29	1.0 Inch Diam. Copper Pipe Service Connection, Long Side	EA	14	$ 3,500.00	$ 49,000.00	$ 3,000.00	$ 42,000.00	$ 4,200.00	$ 58,800.00	$ 5,700.00	$ 79,800.00	$ 6,200.00	$ 86,800.00
	30	A-30	6 Inch Solid Wall C-900 PVC Sewer Lateral Pipe Inc. Bedding	LF	20	$ 180.00	$ 3,600.00	$ 350.00	$ 7,000.00	$ 75.00	$ 1,500.00	$ 500.00	$ 10,000.00	$ 200.00	$ 4,000.00
	31	A-31	Erosion Control and Water Pollution Prevention	LS	1	$ 45,000.00	$ 45,000.00	$ 3,500.00	$ 3,500.00	$ 1,000.00	$ 1,000.00	$ 9,000.00	$ 9,000.00	$ 150,000.00	$ 150,000.00
	32	A-32	Topsoil Type A	CY	35	$ 65.00	$ 2,275.00	$ 85.00	$ 2,975.00	$ 100.00	$ 3,500.00	$ 90.00	$ 3,150.00	$ 70.00	$ 2,450.00
	33	A-33	Cement Concrete Traffic Curb and Gutter	LF	245	$ 45.00	$ 11,025.00	$ 78.00	$ 19,110.00	$ 100.00	$ 24,500.00	$ 51.00	$ 12,495.00	$ 100.00	$ 24,500.00
	34	A-34	Cement Concrete Sidewalk	SY	165	$ 50.00	$ 8,250.00	$ 128.00	$ 21,120.00	$ 200.00	$ 33,000.00	$ 145.00	$ 23,925.00	$ 200.00	$ 33,000.00
	35	A-35	Project Sign	EA	1	$ 1,500.00	$ 1,500.00	$ 3,500.00	$ 3,500.00	$ 1,000.00	$ 1,000.00	$ 900.00	$ 900.00	$ 200.00	$ 200.00
			Subtotal Schedule A				$ 1,822,477.00		$ 1,655,012.00		$ 1,254,703.00		$ 1,970,601.00		$ 2,413,187.00
Schedule B															
	36	B-1	Minor Change	CALC	1	$ 25,000.00	$ 25,000.00	$ 25,000.00	$ 25,000.00	$ 25,000.00	$ 25,000.00	$ 25,000.00	$ 25,000.00	$ 25,000.00	$ 25,000.00
	37	B-2	Roadway Surveying	LS	1	$ 8,000.00	$ 8,000.00	$ 12,500.00	$ 12,500.00	$ 50,000.00	$ 50,000.00	$ 3,300.00	$ 3,300.00	$ 10,000.00	$ 10,000.00
	38	B-3	SPCC Plan	LS	1	$ 1,500.00	$ 1,500.00	$ 2,500.00	$ 2,500.00	$ 2,000.00	$ 2,000.00	$ 1,000.00	$ 1,000.00	$ 3,000.00	$ 3,000.00
	39	B-4	Project Temporary Traffic Control	LS	1	$ 80,000.00	$ 80,000.00	$ 15,000.00	$ 15,000.00	$ 100,000.00	$ 100,000.00	$ 90,000.00	$ 90,000.00	$ 250,000.00	$ 250,000.00
	40	B-5	Mobilization	LS	1	$ 55,067.00	$ 55,067.00	$ 45,000.00	$ 45,000.00	$ 80,000.00	$ 80,000.00	$ 45,000.00	$ 45,000.00	$ 84,000.00	$ 84,000.00
	41	B-6	Removal of Structures and Obstructions	LS	1	$ 500.00	$ 500.00	$ 9,500.00	$ 9,500.00	$ 235,000.00	$ 235,000.00	$ 5,000.00	$ 5,000.00	$ 5,000.00	$ 5,000.00
	42	B-7	Remove and Dispose of Existing Concrete Traffic Curb and Gutter	LF	276	$ 25.00	$ 6,900.00	$ 23.00	$ 6,348.00	$ 20.00	$ 5,520.00	$ 15.00	$ 4,140.00	$ 10.00	$ 2,760.00
	43	B-8	Remove and Dispose of Existing Concrete Sidewalk	SY	162	$ 35.00	$ 5,670.00	$ 33.00	$ 5,346.00	$ 50.00	$ 8,100.00	$ 43.00	$ 6,966.00	$ 15.00	$ 2,430.00
	44	B-9	Roadway Excavation Incl. Haul	CY	332	$ 50.00	$ 16,600.00	$ 70.00	$ 23,240.00	$ 40.00	$ 13,280.00	$ 15.00	$ 4,980.00	$ 100.00	$ 33,200.00
	45	B-10	Crushed Surfacing Top Course Incl. Haul	TON	139	$ 45.00	$ 6,255.00	$ 70.00	$ 9,730.00	$ 70.00	$ 9,730.00	$ 56.00	$ 7,784.00	$ 60.00	$ 8,340.00
	46	B-11	Permeable Ballast Incl. Haul for Road	TON	600	$ 45.00	$ 27,000.00	$ 80.00	$ 48,000.00	$ 70.00	$ 42,000.00	$ 15.00	$ 9,000.00	$ 1.00	$ 600.00
	47	B-12	Planing Bituminous Pavement	SY	6870	$ 15.00	$ 103,050.00	$ 4.00	$ 27,480.00	$ 10.00	$ 68,700.00	$ 5.00	$ 34,350.00	$ 10.00	$ 68,700.00
	48	B-13	HMA Class 1/2" PG 58V-22	TON	783	$ 150.00	$ 117,450.00	$ 195.00	$ 152,685.00	$ 240.00	$ 187,920.00	$ 148.00	$ 115,884.00	$ 200.00	$ 156,600.00
	49	B-14	Commercial HMA for Pavement Repair Class Â½â€ PG 58H-22 Incl. Excavation and Haul	TON	72	$ 190.00	$ 13,680.00	$ 325.00	$ 23,400.00	$ 400.00	$ 28,800.00	$ 520.00	$ 37,440.00	$ 460.00	$ 33,120.00
	50	B-15	Asphalt Cost Price Adjustment	CALC	1	$ 1,690.00	$ 1,690.00	$ 1,690.00	$ 1,690.00	$ 1,690.00	$ 1,690.00	$ 1,690.00	$ 1,690.00	$ 1,690.00	$ 1,690.00
	51	B-16	Pavement Repair Membrane	SY	500	$ 35.00	$ 17,500.00	$ 25.00	$ 12,500.00	$ 10.00	$ 5,000.00	$ 19.00	$ 9,500.00	$ 12.00	$ 6,000.00
	52	B-17	Commercial HMA or Asphalt Treated Base for Temporary Patch	TON	7	$ 250.00	$ 1,750.00	$ 325.00	$ 2,275.00	$ 1.00	$ 7.00	$ 272.00	$ 1,904.00	$ 180.00	$ 1,260.00
	53	B-18	New Rectangular Frame and Locking Vaned Grate, and Adjust to Finished Grade	EA	3	$ 1,000.00	$ 3,000.00	$ 2,750.00	$ 8,250.00	$ 1,000.00	$ 3,000.00	$ 1,200.00	$ 3,600.00	$ 1,900.00	$ 5,700.00
	54	B-19	Adjust Catch Basin Type 2 with Circular Frame and Locking Solid Cover with "STORM DRAIN" Lettering to Finished Grade	EA	2	$ 1,500.00	$ 3,000.00	$ 2,150.00	$ 4,300.00	$ 5,000.00	$ 10,000.00	$ 980.00	$ 1,960.00	$ 1,400.00	$ 2,800.00
	55	B-20	New Circular Frame and Locking Solid Cover with â€œSEWERâ€ Lettering, and Adjust to Finished Grade	EA	3	$ 2,000.00	$ 6,000.00	$ 2,500.00	$ 7,500.00	$ 1,000.00	$ 3,000.00	$ 1,500.00	$ 4,500.00	$ 2,300.00	$ 6,900.00
	56	B-21	Adjust Existing Valve Box Case and Cover to Finished Grade	EA	1	$ 2,000.00	$ 2,000.00	$ 3,500.00	$ 3,500.00	$ 1,000.00	$ 1,000.00	$ 785.00	$ 785.00	$ 700.00	$ 700.00
	57	B-22	Adjust Sewer Cleanout Box to Finished Grade	EA	2	$ 1,200.00	$ 2,400.00	$ 2,500.00	$ 5,000.00	$ 1,000.00	$ 2,000.00	$ 785.00	$ 1,570.00	$ 700.00	$ 1,400.00
	58	B-23	Erosion Control and Water Pollution Prevention	LS	1	$ 25,000.00	$ 25,000.00	$ 2,500.00	$ 2,500.00	$ 15,000.00	$ 15,000.00	$ 3,000.00	$ 3,000.00	$ 50,000.00	$ 50,000.00
	59	B-24	Topsoil Type A	CY	1	$ 65.00	$ 65.00	$ 1,500.00	$ 1,500.00	$ 100.00	$ 100.00	$ 90.00	$ 90.00	$ 200.00	$ 200.00
	60	B-25	Cement Concrete Traffic Curb and Gutter	LF	277	$ 50.00	$ 13,850.00	$ 65.00	$ 18,005.00	$ 100.00	$ 27,700.00	$ 51.00	$ 14,127.00	$ 90.00	$ 24,930.00
	61	B-26	Cement Concrete Pedestrian Curb	LF	140	$ 50.00	$ 7,000.00	$ 30.00	$ 4,200.00	$ 100.00	$ 14,000.00	$ 42.00	$ 5,880.00	$ 90.00	$ 12,600.00
	62	B-27	Raised Pavement Marker Type 1	HUND	9	$ 250.00	$ 2,250.00	$ 500.00	$ 4,500.00	$ 500.00	$ 4,500.00	$ 515.00	$ 4,635.00	$ 800.00	$ 7,200.00
	63	B-28	Raised Pavement Marker Type 2	HUND	1	$ 250.00	$ 250.00	$ 1,500.00	$ 1,500.00	$ 1,650.00	$ 1,650.00	$ 1,500.00	$ 1,500.00	$ 2,500.00	$ 2,500.00
	64	B-29	Adjust Monument Case and Cover	EA	4	$ 1,500.00	$ 6,000.00	$ 1,500.00	$ 6,000.00	$ 1,000.00	$ 4,000.00	$ 785.00	$ 3,140.00	$ 1,000.00	$ 4,000.00
	65	B-30	Cement Concrete Sidewalk	SY	187	$ 80.00	$ 14,960.00	$ 98.00	$ 18,326.00	$ 200.00	$ 37,400.00	$ 202.00	$ 37,774.00	$ 200.00	$ 37,400.00
	66	B-31	Detectable Warning Surface	SF	81	$ 110.00	$ 8,910.00	$ 210.00	$ 17,010.00	$ 75.00	$ 6,075.00	$ 74.00	$ 5,994.00	$ 100.00	$ 8,100.00
	67	B-32	Permanent Signing	LS	1	$ 500.00	$ 500.00	$ 2,500.00	$ 2,500.00	$ 2,000.00	$ 2,000.00	$ 1,800.00	$ 1,800.00	$ 2,000.00	$ 2,000.00
	68	B-33	Plastic Crosswalk Line	SF	80	$ 7.00	$ 560.00	$ 35.00	$ 2,800.00	$ 20.00	$ 1,600.00	$ 20.00	$ 1,600.00	$ 40.00	$ 3,200.00
	69	B-34	Paint Line	LF	1558	$ 3.00	$ 4,674.00	$ 5.00	$ 7,790.00	$ 1.00	$ 1,558.00	$ 1.00	$ 1,558.00	$ 2.50	$ 3,895.00
	70	B-35	Plastic Stop Line	LF	16	$ 12.00	$ 192.00	$ 45.00	$ 720.00	$ 50.00	$ 800.00	$ 45.00	$ 720.00	$ 60.00	$ 960.00
	71	B-36	Plastic Line	LF	3290	$ 5.00	$ 16,450.00	$ 6.00	$ 19,740.00	$ 2.00	$ 6,580.00	$ 2.20	$ 7,238.00	$ 3.00	$ 9,870.00
	72	B-37	Temporary Pavement Marking	LF	1558	$ 1.00	$ 1,558.00	$ 4.00	$ 6,232.00	$ 3.00	$ 4,674.00	$ 4.00	$ 6,232.00	$ 2.00	$ 3,116.00
			Subtotal Schedule B				$ 606,231.00		$ 564,067.00		$ 1,009,384.00		$ 510,641.00		$ 879,171.00
Schedule C															
	73	C-1	Apprenticeship Incentive/Penalty	CALC	1	$ 2,000.00	$ 2,000.00	$ 2,000.00	$ 2,000.00	$ 2,000.00	$ 2,000.00	$ 2,000.00	$ 2,000.00	$ 2,000.00	$ 2,000.00
			Subtotal Schedule C				$ 2,000.00		$ 2,000.00		$ 2,000.00		$ 2,000.00		$ 2,000.00
Base Bid Total:															
			Subtotal Schedule A + B + C				$ 2,430,708.00		$ 2,221,079.00		$ 2,266,087.00		$ 2,483,242.00		$ 3,294,358.00
			Tax on Schedule A				$ 191,360.09		$ 173,776.26		$ 131,743.82		$ 206,913.11		$ 253,384.64
			Total				**$ 2,622,068.09**		**$ 2,394,855.26**		**$ 2,397,830.82**		**$ 2,690,155.11**		**$ 3,547,742.64**

CONTRACT PROVISIONS

For

Westside Water Main Phase II and Overlay
MLT Project No. C2501

April 2026

Public Works Department
Engineering Services Division
Mountlake Terrace City Hall
23204 58th Ave West
Mountlake Terrace, WA 98043
425-776-1161

Westside Water Main Phase II and Overlay
MLT Project No. C2501

City of Mountlake Terrace
Snohomish County, Washington

Council Members
Steve Woodard, Mayor
Bryan Wahl, Mayor Pro Tem
Erin Murray
Kyoko Matsumoto Wright
Laura Sonmore
Sam Doyle
William L. Paige, Jr.

City Manager
Jeff Niten

City Hall
23204 58th Ave West
Mountlake Terrace, WA 98043

City of Mountlake Terrace

Mountlake Terrace, Washington

CONTRACT PROVISIONS

For

Westside Water Main Phase II and Overlay

MLT Project No. C2501

Civic Center
23204 58th Avenue West
Mountlake Terrace, WA 98043
(425) 776-1161

City of Mountlake Terrace

Mountlake Terrace, Washington

Westside Water Main Phase II and Overlay

MLT Project No. C2501

The engineering material and data contained in these contract documents were prepared under the supervision and direction of the undersigned, whose seal as registered professional engineer is affixed below.

TABLE OF CONTENTS

BIDDING INFORMATION

VICINITY MAP

INVITATION/CALL FOR BIDS

INSTRUCTIONS TO BIDDERS

BIDDERS CHECKLIST

BID PROPOSAL

BID BOND

STATEMENT OF BIDDER'S QUALIFICATIONS

STATEMENT OF PROPOSED SUBCONTRACTORS AND ITEMS OF WORK

STATEMENT OF PROPOSED SUBCONTRACTORS FOR HVAC, PLUMBING & ELECTRICAL WORK

CERTIFICATION OF NON-SEGREGATED FACILITIES

NON-COLLUSION DECLARATION

CERTIFICATION OF COMPLIANCE WITH WAGE PAYMENT STATUTES

SUPPLEMENTAL RESPONSIBILITY CRITERIA

CONTRACT DOCUMENTS

CONTRACT

PERFORMANCE BOND

LABOR AND MATERIAL PAYMENT BOND

INSURANCE COVERAGE QUESTIONNAIRE

CONTRACTOR'S AUTHORIZED SIGNATURES

BONDS AND CONTRACTOR DECLARATION FOR MANAGEMENT OF STATUTORY RETAINAGE

MAINTENANCE BOND

NON-DISCRIMINATION CLAUSE FOR PUBLIC CONTRACTS

PREVAILING WAGES

ADDENDA

SPECIAL PROVISIONS

APPENDICES

APPENDIX A – City of Mountlake Terrace's 2024 Engineering Details and Specifications

APPENDIX B – Inadvertent Discovery Language

APPENDIX C – Project Sign

APPENDIX D – Draft Geological Hazards Evaluation

APPENDIX E – Labor and Industry Prevailing Wage Rates

APPENDIX F – Pedestrian Detour and Temporary Ramp Details

PLANS

City of Mountlake Terrace

Westside Water Main Phase II and Overlay

MLT Project No. C2501

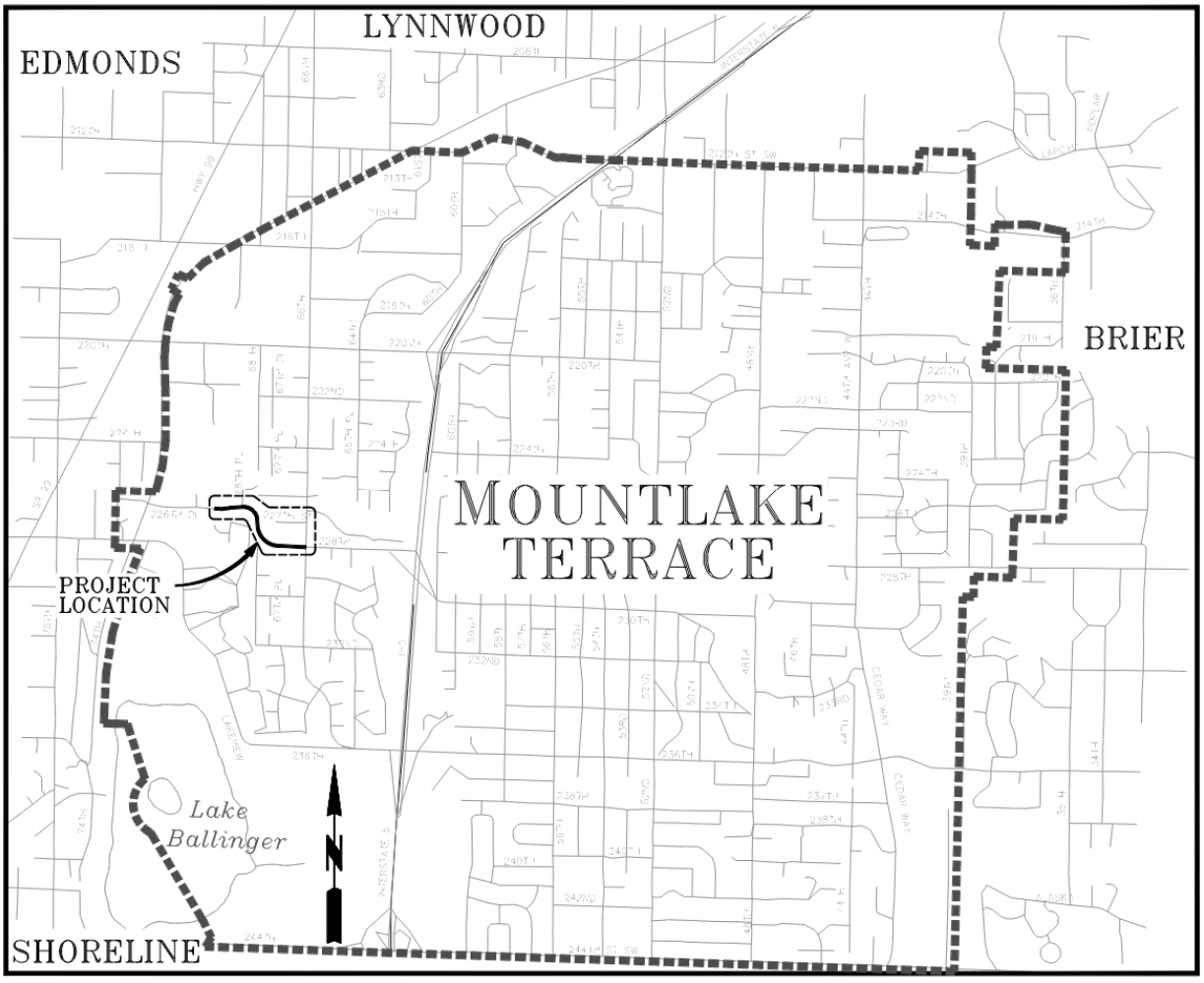

VICINITY MAP & SITE PLAN

INVITATION/CALL FOR BIDS

City of Mountlake Terrace

Westside Water Main Phase II and Overlay

MLT Project No. C2501

QuestCDN: 10129792

The City of Mountlake Terrace will receive and accept sealed electronic bids for this solicitation only through QuestCDN.com via their VirtuBid online bid service. Bids will be received until 2:00 p.m., Pacific Time, on **Wednesday, April 22, 2026** for the **Westside Water Main Phase II and Overlay, MLT Project No. C2501**. Bids received will be opened and read aloud during a virtual public bid opening, to be held at the day and time of the bid closing utilizing Zoom Conference as detailed in the Bidder's Instructions.

This project consists of installing improvements to the City's water facilities, including approximately 1,700 linear feet of 8 inch and 12 inch diameter Class 52 ductile iron water main, seven (7) gate valves, four (4) fire hydrants, one (1) combination air release/air vacuum valve, twenty-seven (27) water connection services, pressure reducing valve (PRV) assembly, approximately 6,900 square yards of pavement planing, 1,000 tons of HMA for pavement repair, 800 tons of HMA for prelevel and overlay paving, six (6) curb ramp replacements, and twenty (20) linear feet of sewer lateral pipe replacement. This project work includes minor restoration of concrete traffic curb and gutter, concrete sidewalk and landscaping, traffic control, signing, striping, erosion control and other work, all in accordance with the attached Contract Plans, these Contract Provisions, and the 2025 WSDOT/APWA Standard Specifications for Road, Bridge, and Municipal Construction.

The estimated cost of construction is between $2,400,000 and $2,900,000.

This project is partially funded through the Washington State Public Works Board program with state funds. This project is partially funded through City funds. All contractors must be licensed in the State of Washington to conduct business. All work on this project is subject to state prevailing wage rates.

The Contract Documents, including plans and specifications, may be viewed at no cost on QuestCDN's website at www.questcdn.com, using ebidDoc #10129792. Printed plans may also be obtained from the City's Engineering Services Department upon a non-refundable payment of $600 per set. Project bid documents must be downloaded from QuestCDN at a cost of $42.00, which will add the Bidder to the Plan Holder list and allow access to the online bidding portal for submittal of your bid. Registering as a Plan holder on QuestCDN is recommended for all prime and subcontractors as only Plan Holders will receive notices of addenda and other updates. For assistance in registering, contact QuestCDN customer support at 952-233-1632 or at info@questcdn.com.

Bid proposals shall be accompanied by a 5% bid proposal deposit as detailed in the Bidder's Instructions. Should the successful bidder fail to enter into such contract and furnish satisfactory performance bond within the time stated in the specifications, the bid proposal deposit shall be forfeited to the City of Mountlake Terrace.

The City retains the right to reject any and all bids and to waive informalities and minor irregularities in the bidding process.

The City of Mountlake Terrace, in accordance with the provisions of Title VI of the Civil Rights Act of 1964 (78 Stat. 252, 42 U.S.C. §§ 2000d to 2000d-4) and the Regulations, hereby notifies all bidders that it will affirmatively ensure that any contract entered into pursuant to this advertisement, disadvantaged business enterprises will be afforded full and fair opportunity to submit bids in response to this invitation and will not be discriminated against on the grounds of race, color, or national origin in consideration for an award.

The City of Mountlake Terrace is an Equal Opportunity Employer.

CITY OF MOUNTLAKE TERRACE

Jeff Niten

Jeff Niten, City Manager

Publications: Seattle Daily Journal of Commerce – Wednesday, April 1, and April 8, 2026.
Everett Herald – Wednesday, April 1, and April 8, 2026.
Washington State Office of Minority & Women's Business Enterprises – Wednesday, April 1, 2026.

INSTRUCTIONS TO BIDDERS

City of Mountlake Terrace
Westside Water Main Phase II and Overlay
MLT Project No. C2501

Note: The intent of these instructions is to offer additional details to the Standard Specifications and Special Provisions.

1. Project Location

The project is located at various locations within the City of Mountlake Terrace as identified on the plans, specifications, and vicinity map.

2. Prevailing Wages

The State of Washington prevailing wage requirements (RCW 39.12) apply. The Contractor is required to pay the applicable prevailing wage rates in effect upon April 22, 2026, the Bid Due Date, which shall remain in effect for the duration of the Contract. The prevailing wage rates lookup page is located at https://secure.lni.wa.gov/wagelookup/ (select Snohomish County and use the bid due date as the effective date). A copy of the applicable wage rates is provided in Appendix E.

The City of Mountlake Terrace does not imply or warrant that the Contractor will find labor available at those rates. The Contractor is required to file a Statement of Intent to Pay Prevailing Wages (Intent) and an Affidavit of Wages Paid (Affidavit) form for each job with Labor & Industries. Reference Section 1-07.9 for additional requirements.

3. Plans and Provisions

The Contract Documents, including plans and specifications, may be viewed at no cost on QuestCDN's website at www.questcdn.com, using ebidDoc #10129792 before deciding to become a Plan Holder. Printed plans may also be obtained from the City's Engineering Services Department upon a non-refundable payment of $600 per set.

4. Plan Holders and Bid Documents

To be considered a Plan Holder for bids, a contractor must register at no cost with QuestCDN.com and purchase the contract documents in digital form for a non-refundable download fee of $42.00. Only registered Plan Holders will receive notices of addenda and other updates, be able to download required bid forms, and submit bids via QuestCDN.

It is strongly advised that you complete the registration process and become familiar with the electronic bidding platform well in advance of the bid proposal due date. Contact QuestCDN customer support at 952-233-1632 or at info@questcdn.com, for assistance with registration, downloading, online bidding, or working with digital bid documents.

5. Proposals

Bids shall only be accepted via QuestCDN's VirtuBid, online electronic bid service, using eBidDoc#10129792.

Prospective bidders must be registered Plan Holders through QuestCDN in order to submit a bid.

To access the electronic bid worksheets and forms, download the project documents and click the online bid button on the bid advertisement page, using QuestCDN ebidDoc #10129792.

Bidders must enter their bid unit prices, as well as enter the amount to be paid in state taxes on the line specified, using **only** the online Bidders Worksheet provided on QuestCDN.com. Do not change the Unit Prices that have been entered by the City. All additional required bid forms shall be submitted online using the forms provided on the bidding site.

The proposal contains a Base Bid (Schedule "A", Schedule "B", and Schedule "C"). The bidders shall complete all schedules of the proposal for their bid to be considered responsive and be considered.

The online bid must be completed and submitted, all addenda acknowledged, all other acknowledgements completed, and required forms signed and uploaded to the QuestCDN Virtual bid site in order to submit a complete bid.

Bid proposals will only be received until 2:00 p.m. on Wednesday, April 22, 2026.

6. Bid Proposal Deposit

As a guarantee of good faith and as required by law, each bid shall be accompanied by a bid proposal deposit in the form of a certified check, cashier's check, or surety bond, payable without condition to the City of Mountlake Terrace, for an amount not less than five (5) percent of the total amount of bid. Cash will not be accepted.

Deposits of the three low bidders will be retained until a contract has been entered into between the successful bidder and the City of Mountlake Terrace and until a performance and payment bond in an amount of 100 percent of the contract price has been filed as required under these contract documents.

The following options are available for submission of bid proposal deposits; Bidders utilize ONLY one option:

> Surety2000 Bid Bonds – Bidders (and their Surety) register with Surety2000 to get their Contractor and Bond identification number. Bidders enter these numbers in the Bid Bond section on the QuestCDN VirtuBid site. When using this method, bidders do not need to provide physical bonds to the City.

Electronic Bid Bonds – Bidders will download the City Bid Bond form provided on the bid site, then upload the completed form to the QuestCDN VirtuBid. When using this method, bidders must provide the original bid bond to the City Clerk in a sealed envelope clearly marked with "Sealed Bid-Westside Water Main Phase II and Overlay-Supplemental Information" before the bid opening. Postmarks with date and time stamps evidencing it was posted prior to the bid opening are acceptable. For in-person delivery, City Hall offices are open 8:00 am to 5:00 pm Monday through Friday. It is the sole responsibility of the Bidder to ensure their bid deposit is received on time whether sent by mail or in-person delivery.

Certified or Cashier's Check – must be provided to the City Clerk in a sealed envelope clearly marked with "Sealed Bid-Westside Water Main Phase II and Overlay-Supplemental Information" before the bid opening. Postmarks with date and time stamps evidencing it was posted prior to the bid opening are acceptable. For in-person delivery, City Hall offices are open 8:00 am to 5:00 pm Monday through Friday. It is the sole responsibility of the Bidder to ensure their bid deposit is received on time whether sent by mail or in-person delivery.

7. Public Bid Opening

The City will receive and accept bids ONLY through QuestCDN.com via their secure VirtuBid online bid service. A virtual public bid opening will be held at the day and time of the bid closing utilizing the Zoom Conference application. Conference details are provided below:

Topic: Bid Opening: Westside Water Main Phase II and Overlay
Time: April 22, 2026 at 02:00 PM Pacific Time (US and Canada)

Join Zoom Meeting
https://us02web.zoom.us/j/89470008458?pwd=aVoo82HddfBr1OoLuY7zs613tSTcJr.1
Meeting ID: 894 7000 8458
Passcode: 156839

One tap mobile
+12532050468,,89470008458#,,,,*156839# US
+12532158782,,89470008458#,,,,*156839# US (Tacoma)

Dial by your location
• +1 253 205 0468 US
• +1 253 215 8782 US (Tacoma)
• +1 669 900 6833 US (San Jose)
• +1 719 359 4580 US
• +1 346 248 7799 US (Houston)
• +1 669 444 9171 US
• +1 386 347 5053 US
• +1 507 473 4847 US
• +1 564 217 2000 US
• +1 646 931 3860 US

• +1 689 278 1000 US
• +1 929 436 2866 US (New York)
• +1 301 715 8592 US (Washington DC)
• +1 305 224 1968 US
• +1 309 205 3325 US
• +1 312 626 6799 US (Chicago)
• +1 360 209 5623 US
Meeting ID: 894 7000 8458
Passcode: 156839
Find your local number: https://us02web.zoom.us/u/kch2vW0iM0

8. Award of Contract

This contract will be awarded in accordance with the contract specifications.

9. Completion Time

Contractor shall be required to have the Contract physically completed within one hundred twenty (**120**) working days from the Notice to Proceed Date. See Section 1-08.5 of the Special Provisions for more comprehensive information.

10. Questions and Contacts

Questions or clarifications regarding this Invitation for Bid must be received by close of business on **Monday, April 20, 2026**. Questions or clarifications regarding this Invitation/Call for Bids may be submitted directly on the QuestCDN VirtuBid website, or to the Project Contacts listed below. All questions will be responded to via QuestCDN.

Jeff Rivers Project Engineer jrivers@mltwa.gov 425-744-6203	OR	Roth Seng Project Engineer rseng@mltwa.gov 425-744-6274

BIDDERS CHECKLIST

City of Mountlake Terrace

Westside Water Main Phase II and Overlay

MLT Project No. C2501

I. Bidder Forms:

The Bidder's attention is especially called to the following forms that must be executed in full as required and submitted with his/her bid.

a. Bid Proposal form:
The unit prices must be shown in the space provided in the csv tabulation provided on the online bidding platform (excel/csv file). The Bid Proposal form must otherwise be filled in and signed by Bidder and then uploaded to the online bidding platform.

b. Bid Proposal Bond:
This form is to be executed by the Bidder and the Surety Company unless the bid deposit is submitted via Surety2000 or by certified check or cashier's check. The amount of this bond shall be not less than five percent (5%) of the total amount of bid and may be shown in dollars or on a percentage basis.

c. Statement of Bidder's Qualifications:
To be completed, signed and uploaded to the bidding platform.

d. Statement of Proposed Subcontractors and Items of Work:
To be filled out and submitted online. If there are no subcontractors, write "none" on the first line of the form.

e. Statement of Proposed Subcontractors for HVAC, Plumbing & Electrical Work:
To be filled out and submitted online. Statement of Proposed Subcontractors for HVAC, Plumbing & Electrical Work. If there are no subcontractors, write "none" on the first line of the form.

f. Non-Collusion Declaration:
To be completed, signed and uploaded to the bidding platform.

g. Certification of Non-Segregated Facilities:
To be completed, signed and uploaded to the bidding platform.

h. Certification of Compliance with Wage Payment Statutes:
To be completed, signed and uploaded to the bidding platform.

i. Supplemental Responsibility Criteria:
To be completed, signed and uploaded to the bidding platform.

II. Successful Bidder Forms:

Following Contract award, the following forms are to be executed and returned to the City via email within 10 calendar days after the date of contract award.

a. Contract
To be executed by successful Bidder with secure electronic signature via City-hosted DocuSign. Contractor to provide name, title, and email address of the contract signatory within 3 days of award.

b. Performance Bond - AIA Document A311 March 1979 Edition
To be executed by successful Bidder and Surety Company. Email a copy, mail the original.

c. Labor and Material Payment Bond - AIA Document A311 March 1979 Edition
To be executed by successful Bidder and Surety Company. Email a copy, mail the original.

d. Insurance Coverage Questionnaire
Form to be completed by Contractor's Insurance Company and attached to a completed Certification of Insurance form (ACORD#25) and endorsements.

e. Contractor's Authorized Signatures
Form to be completed by Bidder listing the names and title of those individuals in your organization who are authorized to execute proposals, contracts, bonds, pay estimates, and other documents instruments on behalf of the organization.

f. Contractor's Declaration of Option for Management of Statutory Retained Percentage.
To be executed by successful Bidder with secure electronic signature via City-hosted DocuSign or Surety Company.

III. The following forms are to be executed after the contract is signed.

a. Intent to Pay Prevailing Wages and Affidavit of Wages Paid
To be completed by successful Contractor and all subcontractors on the Labor and Industries website.

b. Maintenance Bond
To be completed and submitted upon Physical Completion of the project.

BID PROPOSAL

From: _____
Contractor's Name

To the City Clerk
Mountlake Terrace, Washington

The undersigned hereby certify(ies) that they have personally examined the location and construction details of work as outlined on the plans and specifications for the **Westside Water Main Phase II and Overlay, MLT Project No. C2501**, and have read and thoroughly understand the plans and specifications and contract governing the work embraced in this improvement and the method by which payment will be made for said work and hereby propose to undertake and complete the work embraced in this improvement in accordance with said plans, specifications, and contract at the attached schedule of rates and unit prices.

The following abbreviations are intended to indicate the location of the "payment" sections for each bid item. The abbreviations are not intended to indicate the location of other specifications corresponding to the bid items. Bidders are advised to review the Standard Specifications and the Special Provisions for each item of work.

Note: Unit prices for all items, all extension and total amount of bid must be shown.

SS = Standard Specifications **SP = Special Provisions**

BASED BID SCHEDULE "A" – WATER MAIN

Item No.	APPROX. TOTAL QTY	BID ITEM DESCRIPTION	Unit Price	TOTAL AMOUNT DOLLAR/CTS
A-1	1 CALC	SP 1-04.4(1) Minor Change	$1.00	$25,000.00
A-2	1 LS	SP 1-05.4 Roadway Surveying		
A-3	1 LS	SP 1-05.18 Record Drawing (Minimum Bid = $1000.00)		
A-4	1 LS	SS 1-07.15(1) SPCC Plan		
A-5	10 EA	SP 1-07.17(3)C Potholing		
A-6	1 LS	SP 1-09.7 Mobilization		

Item No.	APPROX. TOTAL QTY	BID ITEM DESCRIPTION	Unit Price	TOTAL AMOUNT DOLLAR/CTS
A-7	1 LS	SP 1-10.5(1) Project Temporary Traffic Control		
A-8	1 LS	SP 2-02.5 Removal of Structures and Obstructions		
A-9	245 LF	SP 2-02.5 Remove and Dispose of Existing Concrete Traffic Curb and Gutter		
A-10	165 SY	SP 2-02.5 Remove and Dispose of Existing Concrete Sidewalk		
A-11	1060 TON	SP 4-04.5 Crushed Surfacing Top Course Incl. Haul		
A-12	980 TON	SP 5-04.5 Commercial HMA for Pavement Repair Class ½" PG 58H-22 Incl. Excavation and Haul		
A-13	1 CALC	SP 5-04.5 Asphalt Cost Price Adjustment	$1.00	$1,937.00
A-14	286 TON	SP 5-07.5 Commercial HMA or Asphalt Treated Base for Temporary Patch		
A-15	2515 TON	SP 7-08.5 Gravel Borrow Incl. Haul for Water and Sewer		
A-16	60 TON	SP 7-08.5 Foundation Materials Class A Incl. Haul for Water and Sewer		
A-17	1 LS	SP 7-08.5 Trench Safety and Shoring or Extra Excavation Class A and Class B for Water and Sewer		
A-18	12 LF	SP 7-09.5 Ductile Iron Pipe for Water Main, Class 52, 8 Inch Diam.		
A-19	1715 LF	SP 7-09.5 Ductile Iron Pipe for Water Main, Class 52, 12 Inch Diam.		
A-20	4 EA	SP 7-09.5 Cut and Cap Existing Water Main		
A-21	1 EA	SP 7-12.5 Gate Valve, 8 Inch		
A-22	6 EA	SP 7-12.5 Gate Valve, 12 Inch		

Item No.	APPROX. TOTAL QTY	BID ITEM DESCRIPTION	Unit Price	TOTAL AMOUNT DOLLAR/CTS
A-23	1 EA	SP 7-12.5 Combination Air Release/Air Vacuum Valve Assembly, 1 Inch		
A-24	1 EA	SP 7-12.5 Pressure Reducing Valve (PRV) Assembly		
A-25	1 EA	SP 7-12.5 Abandon Existing Pressure Reducing Valve (PRV) Assembly		
A-26	4 EA	SP 7-14.5 Fire Hydrant Assembly		
A-27	4 EA	SP 7-14.5 Remove and Dispose of Existing Fire Hydrant Assembly		
A-28	14 EA	SP 7-15.5 1.0 Inch Diam. Copper Pipe Service Connection, Short Side		
A-29	13 EA	SP 7-15.5 1.0 Inch Diam. Copper Pipe Service Connection, Long Side		
A-30	20 LF	SP 7-18.5 6 Inch Solid Wall C-900 PVC Sewer Lateral Pipe Inc. Bedding		
A-31	1 LS	SP 8-01.5(1) Erosion Control and Water Pollution Prevention		
A-32	35 CY	SP 8-02.5 Topsoil Type A		
A-33	245 LF	SP 8-04.5 Cement Concrete Traffic Curb and Gutter		
A-34	165 SY	SP 8-14.5 Cement Concrete Sidewalk		
A-35	1 EA	SP 8-21.5 Project Sign		
Subtotal Based Bid Schedule "A"				
Washington State Sales Tax @ 10.50% - Department of Revenue Rule 170				
Total Based Bid Schedule "A"				

BASED BID SCHEDULE "B" – OVERLAY PAVEMENT

Item No.	APPROX. TOTAL QTY	BID ITEM DESCRIPTION	Unit Price	TOTAL AMOUNT DOLLAR/CTS
B-1	1 CALC	SP 1-04.4(1) Minor Change	$1.00	$25,000.00
B-2	1 LS	SP 1-05.4 Roadway Surveying		
B-3	1 LS	SS 1-07.15(1) SPCC Plan		
B-4	1 LS	SP 1-10.5(1) Project Temporary Traffic Control		
B-5	1 LS	SP 1-09.7 Mobilization		
B-6	1 LS	SP 2-02.5 Removal of Structures and Obstructions		
B-7	276 LF	SP 2-02.5 Remove and Dispose of Existing Concrete Traffic Curb and Gutter		
B-8	162 SY	SP 2-02.5 Remove and Dispose of Existing Concrete Sidewalk		
B-9	332 CY	SS 2-03.5 Roadway Excavation Incl. Haul		
B-10	139 TON	SP 4-04.5 Crushed Surfacing Top Course Incl. Haul		
B-11	600 TON	SP 4-04.5 Permeable Ballast Incl. Haul for Road		
B-12	6870 SY	SP 5-04.5 Planing Bituminous Pavement		
B-13	783 TON	SP 5-04.5 HMA Class 1/2" PG 58V-22		
B-14	72 TON	SP 5-04.5 Commercial HMA for Pavement Repair Class ½" PG 58H-22 Incl. Excavation and Haul		
B-15	1 CALC	SP 5-04.5 Asphalt Cost Price Adjustment	$1.00	$1,692.00
B-16	500 SY	SP 5-06.5 Pavement Repair Membrane		
B-17	7 TON	SP 5-07.5 Commercial HMA or Asphalt Treated Base for Temporary Patch		

Item No.	APPROX. TOTAL QTY	BID ITEM DESCRIPTION	Unit Price	TOTAL AMOUNT DOLLAR/CTS
B-18	3 EA	SP 7-05.5 New Rectangular Frame and Locking Vaned Grate, and Adjust to Finished Grade		
B-19	2 EA	SP 7-05.5 Adjust Catch Basin Type 2 with Circular Frame and Locking Solid Cover with "STORM DRAIN" Lettering to Finished Grade		
B-20	3 EA	SP 7-05.5 New Circular Frame and Locking Solid Cover with “SEWER” Lettering, and Adjust to Finished Grade		
B-21	1 EA	SP 7-12.5 Adjust Existing Valve Box Case and Cover to Finished Grade		
B-22	2 EA	SP 7-19.5 Adjust Sewer Cleanout Box to Finished Grade		
B-23	1 LS	SP 8-01.5(1) Erosion Control and Water Pollution Prevention		
B-24	1 CY	SP 8-02.5 Topsoil Type A		
B-25	277 LF	SP 8-04.5 Cement Concrete Traffic Curb and Gutter		
B-26	140 LF	SP 8-04.5 Cement Concrete Pedestrian Curb		
B-27	9 HUND	SS 8-09.5 Raised Pavement Marker Type 1		
B-28	1 HUND	SS 8-09.5 Raised Pavement Marker Type 2		
B-29	4 EA	SP 8-13.5 Adjust Monument Case and Cover		
B-30	187 SY	SP 8-14.5 Cement Concrete Sidewalk		
B-31	81 SF	SP 8-14.5 Detectable Warning Surface		
B-32	1 LS	SP 8-21.5 Permanent Signing		
B-33	80 SF	SS 8-22.5 Plastic Crosswalk Line		
B-34	1558 LF	SS 8-22.5 Paint Line		

Item No.	APPROX. TOTAL QTY	BID ITEM DESCRIPTION	Unit Price	TOTAL AMOUNT DOLLAR/CTS
B-35	16 LF	SS 8-22.5 Plastic Stop Line		
B-36	3290 LF	SS 8-22.5 Plastic Line		
B-37	1558 LF	SS 8-22.5 Temporary Pavement Marking		
Subtotal Based Bid on Schedule "B"				
Washington State Sales Tax @ 0.00% - Department of Revenue Rule 171				$ 0.00
Total Based Bid on Schedule "B"				

BASED BID SCHEDULE "C" – APPRENTICESHIP UTILIZATION REQUIREMENTS

Item No.	APPROX. TOTAL QTY	BID ITEM DESCRIPTION	Unit Price	TOTAL AMOUNT DOLLAR/CTS
C-1	1 CALC	SP 1-07.9(3) Apprenticeship Incentive/Penalty	$1.00	$2,000.00
Subtotal Based Bid on Schedule "C"				**$ 2,000.00**
Washington State Sales Tax @ 0.00%				$ **0.00**
Total Based Bid on Schedule "C"				$ **2,000.00**

Total Based Bid on Schedule "A": _____

Total Based Bid on Schedule "B": _____

Total Based Bid on Schedule "C": $ 2,000.00

Total Bid on Schedules "A"+ "B"+ "C": _____

The bidder agrees to complete all work awarded to them on **all Base Bid Schedules (Schedule "A" + Schedule "B" + Schedule "C")** within **One Hundred Twenty (120) working days** from the Notice to Proceed Date as specified in Section 1-08.5 of the Special Provisions.

If written notice of acceptance of this bid is mailed, telegraphed or delivered to the undersigned within forty-five (45) days after the date of opening of the bids, or at any time thereafter before this bid is withdrawn, the undersigned agrees that Bidder will give performance bond as specified, with good and sufficient Surety or Sureties, all within ten (10) days (unless a longer period is allowed) after the prescribed forms are presented to Bidder for signature.

Included is a bid proposal deposit, as required, consisting of (certified check, cashier's check, or surety bond) in the amount of $_____which amount is not less than five percent (5%) of the total bid.

The work on this contract is to be performed upon lands whose ownership obligates the Contractor to collect Washington State Sales Tax from the Contracting Agency per Section 1-07.2(1) of the Special Provisions and State Department of Revenue Rule 171.

The party by whom this bid is submitted and by whom the contract will be entered into in the

event the award is made to them is _____ , a

corporation/partnership/individual (indicate which), doing business at _____

_____ to which address notice of acceptance should be sent.

The Bidder hereby acknowledges receipt of addenda numbers ___, ___, ___, ___; and the bid contained herein is reflective of the addenda

Contractor's Registration Number: _____

Contractor's UBI Number:_____

Contractor's state excise tax registration number:_____

Contractor's Employment Security Department number:_____

_____
Legal Name of Person, Firm or Corporation

By: _____

Title:_____

Phone:_____

BID BOND

Bond No. _____

Amount $_____

KNOW ALL MEN BY THESE PRESENTS, that _____, as Principal, hereinafter called the Contractor, and _____, a corporation duly organized under the laws of the State of _____, having its principal place of business at _____, in the State of _____, and authorized to do business in the State of Washington, as Surety, are held and firmly bound unto the **City of Mountlake Terrace,** as OBLIGEE, hereinafter called the Owner, in the penal sum of _____ DOLLARS ($_____), for the payment of which Contractor and Surety bind ourselves, our heirs, executors, administrators, successors, and assigns, jointly and severally, firmly by these presents.

THE CONDITION OF THIS BOND IS SUCH THAT:

WHEREAS the Contractor is herewith submitting his or its Bid Proposal for the **Westside Water Main Phase II and Overlay, MLT Project No. C2501,** said Bid Proposal, by reference thereto, being hereby made a part hereof.

NOW, THEREFORE, if the said Bid Proposal submitted by the Contractor is accepted, and the Contract awarded to the Contractor and if the Contractor shall execute the proposed Contract and shall furnish the Performance and Payment Bond as required by the Bidding and Contract Documents within the time fixed by said Contract Documents, then this obligation shall be void; if the Contractor shall fail to execute the proposed Contract and furnish the required bond, the Surety hereby agrees to pay to the Owner the penal sum as liquidated damages.

Signed and sealed this _____ day of _____, 20_____.

_____ (Seal)
Contractor Name

_____
Surety

_____ (Seal)
Attorney-in-Fact

The Attorney-in-Fact who executes this bond on behalf of the Surety must attach a copy of his power-of-attorney as evidence of his authority.

STATEMENT OF BIDDER'S QUALIFICATIONS

City of Mountlake Terrace

Westside Water Main Phase II and Overlay

MLT Project No. C2501

Each Bidder submitting a proposal on work included in these specifications shall prepare and submit as part of his bid, the data requested in the following schedule:

1. Name of Bidder: _____

2. Business Address: _____

4. How many years has said Bidder been engaged in the contracting business under the present firm name: _____

4. Contracts now in hand (Gross Amt.) $_____

5. General character of work performed by said company:_____

   _____

   _____

6. List of more important projects of similar scope constructed by said Bidder, including date of construction, total project cost, owner's name and name and phone number of owner's representative for the project (list 3). Include relevant projects for cities, counties, and other public agencies:

   Date of Construction:_____ Total Project Cost:_____

   Owner's Name:_____ Project Title:_____

   Name and Phone # of Owner's Representative:_____

   Brief Description of Work Performed:_____

   _____

   _____

   Date of Construction:_____ Total Project Cost:_____

   Owner's Name:_____ Project Title:_____

   Name and Phone # of Owner's Representative:_____

Brief Description of Work Performed:_____

_____

_____

Date of Construction:_____ Total Project Cost:_____

Owner's Name:_____ Project Title:_____

Name and Phone # of Owner's Representative:_____

Brief Description of Work Performed:_____

_____

_____

Date of Construction:_____ Total Project Cost:_____

Owner's Name:_____ Project Title:_____

Name and Phone # of Owner's Representative:_____

Brief Description of Work Performed:_____

_____

_____

7. List key supervisory personnel that are available for the project, including years of experience, areas of construction expertise:

Name: _____ Years of Experience:_____

Construction Expertise:_____

_____

Name: _____ Years of Experience:_____

Construction Expertise:_____

_____

8. List of company's major equipment:

_____

_____

_____

_____

_____

_____

9. Bank References:

_____

_____

_____

_____

_____

_____

Name of Bidder

By: _____ Title: _____

Date: _____ Phone: _____

Email: _____ Fax: _____

Add additional sheets if necessary

STATEMENT OF PROPOSED SUBCONTRACTORS AND ITEMS OF WORK

City of Mountlake Terrace

Westside Water Main Phase II and Overlay

MLT Project No. C2501

The following listed bid items (listed in numerical sequence) for this project have been proposed for subcontracting to subcontractors as indicated below (attach additional sheets as needed):

Note: For HVAC, plumbing, and electrical contractors use form "STATEMENT OF PROPOSED SUBCONTRACTORS FOR HVAC, PLUMBING & ELECTRICAL WORK"

Subcontractor Name_____

Item Numbers _____

_____

Subcontractor Name_____

Item Numbers _____

_____

Subcontractor Name_____

Item Numbers _____

_____

Subcontractor Name_____

Item Numbers _____

_____

Subcontractor Name_____

Item Numbers _____

_____

Subcontractor Name_____

Item Numbers _____

_____

Subcontractor Name_____

Item Numbers _____

_____

Bid item number(s) to be performed by the prime contractor:

(_____)

Prime contractor name

STATEMENT OF PROPOSED SUBCONTRACTORS FOR HVAC, PLUMBING & ELECTRICAL WORK

City of Mountlake Terrace

Westside Water Main Phase II and Overlay

MLT Project No. C2501

Subcontractor(s) that are proposed to perform the work of heating, ventilation and air conditioning, plumbing, as described in Chapter 18.106 RCW, and electrical as described in Chapter 19.28 RCW must be listed below. The bid item(s) and work to be performed is to be listed below the subcontractor's name.

If no subcontractor is listed below, the bidder acknowledges that it does not intend to use any subcontractor to perform those items of work.

Failure to list subcontractors who are proposed to perform the work of heating, ventilation and air conditioning, plumbing, as described in Chapter 18.106 RCW, and electrical as described in Chapter 19.28 RCW will result in the bid being non-responsive and therefore void.

Subcontractor Name_____

Item Numbers & Work to be Performed _____

_____

_____

Subcontractor Name_____

Item Numbers & Work to be Performed _____

_____

_____

Subcontractor Name_____

Item Numbers & Work to be Performed _____

_____

_____

Subcontractor Name_____

Item Numbers & Work to be Performed _____

_____

_____

CERTIFICATION OF NON-SEGREGATED FACILITIES

City of Mountlake Terrace

Westside Water Main Phase II and Overlay

MLT Project No. C2501

The bidder certifies that s/he does not maintain or provide for her/his employees any segregated facilities at any of her/his establishments, and that s/he does not permit her/his employees to perform their services at any locations, under her/his control, where segregated facilities are maintained. The bidder certifies further that s/he will not maintain or provide for her/his employees any segregated facilities at any of her/his establishments, and that s/he will not permit her/his employees to perform their services at any location under her/his control where segregated facilities are maintained. The bidder agrees that a breach of this certification will be a violation of the Equal Opportunity clause in any contract resulting from acceptance of this bid. As used in this certification, the term "segregated facilities" means any waiting rooms, work areas, restrooms and washrooms, restaurants and other eating areas, time clocks, locker rooms and other storage or dressing areas, parking lots, drinking fountains, recreation or entertainment areas, transportation, and housing facilities provided for employees which are segregated by explicit directive or are in fact segregated on the basis of race, color, religion, or national origin, because of habit, local custom, or otherwise. The bidder agrees that, except where s/he has obtained identical certification from proposed subcontractors prior to the award of subcontractors exceeding $10,000 which are not exempt from the provisions of the Equal Opportunity clause, and that s/he will retain such certifications in her/his files.

NOTE: The penalty for making false statements in offers is prescribed in 18 USV 1001.

Subscribed and sworn to before me this _____ day of _____, 202___

_____
Contractor Name

_____
Signature

_____ _____
Name Title

_____
Official Address

_____
City, State, Zip

_____
Project Name

_____
City, State, Zip

(Seal)

(Seal)

_____
Notary's Name

_____
Signature Date

_____
Notary Public in and for the
State of Washington, residing at

MUST BE INCLUDED WITHOUT ALTERATION WITH EACH BID

NON-COLLUSION DECLARATION

City of Mountlake Terrace

Westside Water Main Phase II and Overlay
MLT Project No. C2501

STATE OF WASHINGTON)
)
COUNTY OF)

_____, being first duly sworn, on his oath says that the bid above submitted is genuine and not a sham or collusive bid, or made in the interest or on behalf of any person not therein named; and he further says that the said Bidder has not directly or indirectly induced or solicited any Bidder on the above work or supplies to put in a sham bid, or any other person or corporation to refrain from bidding; and that said Bidder has not in any manner sought by collusion to secure to _____ self an advantage over any other Bidder or Bidders.

Subscribed and sworn to before me this _____ day of _____, 202___

_____
Contractor Name

(Seal)

_____
Signature

_____ _____
Name Title

(Seal)

_____
Notary Public's Name

_____ _____
Notary Public's Signature Date

_____
Notary Public in and for the State of WA, residing at

MUST BE INCLUDED WITHOUT ALTERATION WITH EACH BID

CERTIFICATION OF COMPLIANCE WITH WAGE PAYMENT STATUTES

City of Mountlake Terrace

Westside Water Main Phase II and Overlay

MLT Project No. C2501

The bidder hereby certifies that, within the three-year period immediately preceding the bid solicitation date, the bidder is not a "willful" violator, as defined in RCW 49.48.082, of any provision of chapters 49.46, 49.48, or 49.52 RCW, as determined by a final and binding citation and notice of assessment issued by the Department of Labor and Industries or through a civil judgment entered by a court of limited or general jurisdiction.

I certify under penalty of perjury under the laws of the State of Washington that the foregoing is true and correct.

_____

Name of Contractor /Bidder – Print full legal entity name of firm

_____

Print Name of Person making certifications for firm

_____ _____

Signature of Authorized Person (*) Date

_____

Title of person signing certificate

_____ _____ _____

Print City where signed Print County where signed Print state where signed

Check One:

Sole Proprietorship ☐ Partnership ☐ Joint Venture ☐ Corporation ☐

State of Incorporation, or if not a corporation, State where business entity was formed:

_____

If a co-partnership, give firm name under which business is transacted:

_____

** If a corporation, proposal must be executed in the corporate name by the president or vice-president (or any other corporate officer accompanied by evidence of authority to sign). If a co- partnership, proposal must be executed by a partner.*

SUPPLEMENTAL RESPONSIBILITY CRITERIA

City of Mountlake Terrace

Westside Water Main Phase II and Overlay

MLT Project No. C2501

In accordance with Special Provision 1-02.14, this form and additional required documentation shall be completed by the Bidder.

1. Bidders Business Name and Address:

2. Number of years this business been engaged in contracting: _____

3. Contracts now in hand (Gross Amt.) $_____

4. Provide Financial Institution reference and relationship. Include valid contact name, telephone number, and email address.

5. General character of work performed by Bidder:

6. Provide the name(s) of project superintendent(s) and project manager(s) who will be responsible for this project. Attach their portfolio resumes, which include years of experience and areas of expertise.

7. (1-02.14(3) of the Special Provisions) Attach a copy of your standard subcontract form and a written description of your procedure for validating the responsibility of your subcontractors.

8. (1-02.14(4) of the Special Provision) Attach a list of the public works projects completed in the three years prior to the bid submittal date that have had claims against retainage and bonds and include for each project the following information:

    - Name of project
    - The owner and contact information for the owner;

- A list of claims filed against the retainage and/or payment bond for any of the projects listed;

- A written explanation of the circumstances surrounding each claim and the ultimate resolution of the claim.

9. (1-02.14(6) of the Special Provisions) If the Bidder has had any public works contract terminated for cause or default by a government agency in the five years prior to the bid submittal date, attach an explanation of any extenuating circumstances.

10. (1-02.14(7) of the Special Provisions) If the Bidder has had lawsuits with judgements entered against the Bidder in the five years prior to the bid submittal date, attach a list of those judgements along with an explanation of any extenuating circumstances.

In accordance with 1-02.14 of the Special Provisions, by signing this form, the Bidder and/or its owners attest that they: Meet the Supplemental Responsibility Criteria in Section 1-02.14 of the Special Provisions; have not been convicted of a crime involving bidding on a public works contract in the five years prior to the bid submittal date; have not had any public works contract terminated for cause or default by a government agency in the five years prior to the bid submittal date, or alternatively, Bidder has attached a written explanation of extenuating circumstances; have not had any lawsuits with judgments entered against the Bidder in the five years prior to the bid submittal date that demonstrate a pattern of failing to meet the terms of contracts, or alternatively, Bidder has attached a written explanation of extenuating circumstances.

Print Bidder Name	Title
Signature	Date
Email	Phone

CONTRACT DOCUMENTS

CONTRACT

THIS CONTRACT, made and entered into in duplicate, this _____ day of _____, _____, by and between the City of Mountlake Terrace, hereinafter called the City, and _____, hereinafter called the Contractor.

WITNESSETH:

That in consideration of the terms and conditions contained herein and attached and made a part of this Contract, the parties hereto covenant and agree as follows:

I. The Contractor shall do all work and furnish all tools, materials, and equipment for the **Westside Water Main Phase II and Overlay, MLT Project No. C2501,** in accordance with and described in the attached plans and specifications and the 2025 Standard Specifications for Road, Bridge, and Municipal Construction, which are by this reference incorporated herein and made a part hereof, and shall perform any alterations in or additions to the work provided under this part thereof.

Contractor shall be required to have the contract completed within **One Hundred Twenty (120) working days** from the Notice to Proceed Date as specified in Section 1-08.5 of the Special Provisions. If said work is not completed within the time specified, the Contractor agrees to pay to the City the sum as specified in Section 1-08.9 of the 2025 Standard Specifications for Road, Bridge and Municipal Construction and in Section 1-08.9 in the Special Provisions for each and every working day said work remains uncompleted after expiration of the specified time, as liquidated damages.

The Contractor shall provide and bear the expense of all equipment, work and labor of any sort whatsoever that may be required for the transfer of materials and for constructing and completing the work provided for in this Contract and every part thereof, except such as are mentioned in the specifications to be furnished by the City.

II. The City hereby promises and agrees with the Contractor to employ, and does employ the Contractor to provide the materials and to do and cause to be done the above described work and to complete and finish the same according to the attached plans and specifications and the terms and conditions herein contained and hereby contracts to pay for the same according to the attached specifications and the schedule of unit or itemized prices hereto attached, at the time and in the manner and upon the conditions provided for in this Contract.

III. The Contractor for himself and for his heirs, executors, administrators, successors, and assigns, does hereby agree to the full performance of all the covenants herein contained upon the part of the Contractor.

IV. It is further provided that no liability shall attach to the City by reason of entering into this Contract, except as expressly provided herein.

IN WITNESS WHEREOF the parties hereto have caused this Contract to be executed the day and year first herein above written.

CONTRACTOR	CITY OF MOUNTLAKE TERRACE
_____ Contractor, Firm or Corporation Name	_____ Signature
_____ Federal ID No.	_____ Name _____ Title
_____ Signature	_____ Signature
_____ Name _____ Title	_____ Name _____ Title

ATTEST: _____
City Clerk Signature

_____
City Clerk Name

Contract Amount: _____

PERFORMANCE BOND

(AIA Document A311 March 1979 Edition)

Bond No. _____

Amount $_____

KNOW ALL MEN BY THESE PRESENTS:

That _____ as Principal, hereinafter
(Here insert full name & address or legal title of CONTRACTOR)

called CONTRACTOR, and _____, as
(Here insert full name or legal title of Surety)

as Surety, hereinafter called Surety, a corporation duly organized under the laws of the State of _____, and authorized to do business in the State of Washington as Surety, are held and firmly bound unto the **CITY OF MOUNTLAKE TERRACE; 23204 58th Avenue West, Mountlake Terrace, Washington 98043,** as Obligee, hereinafter called OWNER, in the amount of_____ Dollars ($_____) for the payment whereof CONTRACTOR and Surety bind themselves, their heirs, executors, administrators, successors and assigns, jointly and severally, firmly by these presents.

WHEREAS, CONTRACTOR has by written agreement dated __*_____, entered into a contract with OWNER for the **Westside Water Main Phase II and Overlay, MLT Project No. C2501,** in accordance with the Contract documents which are by reference made a part hereof, and is hereinafter referred to as the Contract.

***** Date on which the Agreement was signed by the CITY.

NOW, THEREFORE, THE CONDITION OF THIS OBLIGATION is such that, if CONTRACTOR shall promptly and faithfully perform said Contract, then this obligation shall be null and void; otherwise it shall remain in full force and effect.

The Surety agrees to indemnify, defend, and protect the City of Mountlake Terrace and the Public Works Board against any claim of direct or indirect loss resulting from the failure of the Contractor, its heirs, executors, administrators, successors, or assigns (or any of the employees, subcontractors, or lower tier subcontractors of the Contractor) to faithfully perform the Contract.

The Surety hereby waives notice of any alteration or extension of time made by the OWNER.

Whenever CONTRACTOR shall be, and declared by OWNER to be in default under the Contract, the OWNER having performed OWNER'S obligations there under, the Surety may promptly remedy the default, or shall promptly:

1) Complete the Contract in accordance with its terms and conditions, or

2) Obtain a bid or bids for completing the Contract in accordance with its terms and conditions, and upon determination by Surety of the lowest responsible Bidder, or, if the OWNER elects, upon determination by the OWNER and the Surety jointly of the lowest responsible Bidder, arrange for a contract between such Bidder and OWNER, and make available as work progresses (even though there should be a default or a succession of defaults under the contract or contracts of completion arranged under this paragraph) sufficient funds to pay the cost of completion less the balance of the contract price; but not exceeding, including other costs and damages for which the Surety may be liable hereunder, the amount set forth in the first paragraph hereof. The term "balance of the contract price," as used in this paragraph, shall mean the total amount payable by OWNER to CONTRACTOR under the Contract and any amendments thereto, less the amount properly paid by OWNER to CONTRACTOR.

Any suit under this Bond must be instituted before the **expiration of two (2) years from the date on which final payment under the Contract falls due**.

No right of action shall accrue on this Bond to or for the use of any person or corporation other than the OWNER named herein or the heirs, executors, administrators or successors of OWNER.

_____ (Seal)
CONTRACTOR

_____
Title

_____
Surety

(Seal)

_____
Attorney-in-Fact

The Attorney-in-Fact who executes this Bond on behalf of the Surety, must attach a copy of his power-of-attorney as evidence of his authority

(Seal)

Subscribed and sworn to before me this _____ day of _____, 20_____.

Notary Public:_____

My Commission expires _____

(Seal)

_____	_____
Agency or Brokerage's name	Completed form by (Type or Print)
_____	_____
Address	Completed form by (Signature)
_____	
_____	_____
Name of Person to be Contacted	Telephone Number

LABOR AND MATERIAL PAYMENT BOND

(AIA Document A311 March 1979 Edition)

Bond No. _____

Amount $_____

THIS BOND IS ISSUED SIMULTANEOUSLY WITH PERFORMANCE BOND IN FAVOR OF THE OWNER CONDITIONED ON THE FULL AND FAITHFUL PERFORMANCE OF THE CONTRACT.

KNOW ALL MEN BY THESE PRESENTS:

That _____ as Principal, hereinafter
(Here insert full name & address or legal title of CONTRACTOR)

called CONTRACTOR, and_____, as Surety,
(Here insert full name or legal title of Surety)

hereinafter called Surety, a corporation duly organized under the laws of the State of _____, and authorized to do business in the State of Washington as Surety, are held and firmly bound unto the **CITY OF MOUNTLAKE TERRACE; 23204 58th Avenue West, Mountlake Terrace, Washington 98043,** as Obligee, hereinafter called OWNER, for the use and benefits of claimants as herein below defined, in the amount of _____ Dollars ($_____) for the payment whereof CONTRACTOR and Surety bind themselves, their heirs, executors, administrators, successors and assigns, jointly and severally, firmly by these presents.

WHEREAS, CONTRACTOR has by written agreement dated __*_____, entered into a contract with OWNER for the **Westside Water Main Phase II and Overlay, MLT Project No. C2501,** in accordance with the Contract documents which are by reference made a part hereof, and is hereinafter referred to as the Contract.

***** Date on which the Agreement was signed by the CITY.

NOW, THEREFORE, THE CONDITION OF THIS OBLIGATION is such that, if CONTRACTOR shall promptly make payment to all claimants as hereinafter defined, for all labor and material used or reasonably required for use in the performance of the Contract, then this obligation shall be void; otherwise it shall remain in full force and effect, subject however, to the following conditions:

1. The Surety agrees to indemnify, defend, and protect the City of Mountlake Terrace and the Public Works Board against any claim of direct or indirect loss resulting from the failure of

the Contractor, its heirs, executors, administrators, successors, or assigns (or any of the employees, subcontractors, or lower tier subcontractors of the Contractor) to faithfully perform the Contract.

2. A claimant is defined as one having a direct contract with the CONTRACTOR or with a Subcontractor of the CONTRACTOR for labor and materials, or both, used or reasonably required for use in the performance of the Contract, labor and material being construed to include that part of water, gas, power, light, heat, oil, gasoline, telephone service or rental of equipment directly applicable to the Contract.

3. The above named CONTRACTOR and Surety hereby jointly and severally agree with the OWNER that every claimant as herein defined, who has not been paid in full before the expiration of a period of ninety (90) days after the date on which the last of such claimant's work or labor was done or performed, or materials were furnished by such claimant, may sue on this Bond for the use of such claimant, prosecute the suit to final judgment for such sum or sums as may be justly due claimant, and have execution thereon. The OWNER shall not be liable for the payment of any costs or expenses of any such suit.

4. No suit or action shall be commenced hereunder by any claimant:

   a) Unless claimant, other than one having a direct contract with the CONTRACTOR, shall have given written notice to any two of the following: The CONTRACTOR, the OWNER, or the Surety above named, within ninety (90) days after such claimant did or performed the last of the work or labor, or furnished the last of the materials for which said claim is made, stating with substantial accuracy the amount claimed and the name of the party to whom the materials were furnished, or for whom the work or labor was done or performed. Such notice shall be served by mailing the same by registered mail or certified mail, postage prepaid, in an envelope addressed to the CONTRACTOR, OWNER or Surety, at any place where an office is regularly maintained for the transaction of business, or served in any manner in which legal process may be served in the State in which the aforesaid project is located, save that such service need not be made by a public officer.

   b) After the expiration of one (1) year following the date on which CONTRACTOR ceased work on said Contract, it being understood, however, that if any limitation embodied in this Bond is prohibited by any law controlling the construction hereof such limitation shall be deemed to be amended so as to be equal to the minimum period of limitation permitted by such law.

   c) Other than in a State court of competent jurisdiction in and for the county or other political subdivision of the State in which the Project, or any part thereof, is situated, or in the United States District Court for the district in which the Project, or any part thereof, is situated, and not elsewhere.

5. The amount of this Bond shall be reduced by and to the extent of any payment of payments made in good faith hereunder, inclusive of the payment by Surety of mechanics' liens which

may be filed of record against said improvement, whether or not claim for the amount of such lien be presented under and against this Bond.

_____ (Seal)
CONTRACTOR

_____
Title

_____
Surety

_____ (Seal)
Attorney-in-Fact

The Attorney-in-Fact who executes this Bond on behalf of the Surety, must attach a copy of his power-of-attorney as evidence of his authority.

(Seal)

Subscribed and sworn to before me this ____ day of

_____, 20_____.

Notary Public:_____

My Commission expires _____

(Seal)

_____ _____
Agency or Brokerage's name Completed form by (Type or Print)

_____ _____
Address Completed form by (Signature)

_____

_____ _____
Name of Person to be Contacted Telephone Number

INSURANCE COVERAGE QUESTIONNAIRE

NOTE: THIS QUESTIONNAIRE MUST BE COMPLETED AND ATTACHED TO THE CERTIFICATE OF INSURANCE.

FOR:_____
(Name of Insured)

Project Name/Number: **Westside Water Main Phase II and Overlay**

MLT Project No. C2501

Project Owner: **City of Mountlake Terrace, Washington**

Are the following coverage or conditions in effect?	Yes	No
The policy form is ISO Commercial General Liability form CG 00 01, with the Aggregate Per Project Endorsement ISO form 25 03 11 85. (If No, attach a copy of policy with required coverages clearly identified.)		
The City, its officials, officers, employees, and volunteers are named as additional insured under the Contractor's Commercial General Liability insurance policy with respect to the work performed for the City using ISO Additional Insured endorsement CG 20 10 10 01 and Additional Insured-Completed Operations endorsement CD 20 37 10 01 or substitute endorsement providing equivalent coverage.		
Products and Completed Operations coverage.		
Cross Liability clause (or equivalent wording).		
Personal Injury Liability Coverage.		
X,C,U Hazards included.		
Blanket Contractual Liability coverage applying to this contract; or Contractual Liability coverage applying to this contract (or equivalent wording).		
Host Liquor Liability coverage.		
45 days written notice of cancellation to the City.		

Deductibles or SIRS: GL $_____ AL $_____ Excess $_____

Insurers' Best Rating(s) GL _____ AL _____ Excess_____

This questionnaire is issued as a matter of information. This Questionnaire is not an insurance policy and does not amend, extend, or alter the coverage afforded by the policies indicated on the attached Certificate of Insurance.

_____ _____
Agency or Brokerage Completed form by (Type or Print)

_____ _____
Address Completed form by (Signature)

_____ _____
Name of Person to be Contacted Telephone Number

CONTRACTOR'S AUTHORIZED SIGNATURES

City of Mountlake Terrace

Westside Water Main Phase II and Overlay

MLT Project No. C2501

List the names and titles of those individuals in your organization who are authorized to execute proposals, contracts, bonds, and other documents and/or instruments on behalf of the organization. Specify if more than one signature is required.

NAME, TITLE	SIGNATURE	DOCUMENT TYPE

The undersigned attests that the foregoing is a true statement of facts concerning the individual, corporation, co-partnership or joint venture herein name, as of the date indicated:

Sworn to before me this _____ Day of _____, 202_____

(Seal)

_____
Name of Firm (Be Exact)

_____ _____
Authorized Signature(s) Date

_____
Printed Name and Title

(Seal)

_____
Notary Public's Name

_____ _____
Notary Public's Signature Date

_____
Notary Public in and for the State of WA, residing at

BONDS AND CONTRACTOR DECLARATION FOR MANAGEMENT OF STATUTORY RETAINAGE

City of Mountlake Terrace

Westside Water Main Phase II and Overlay

MLT Project No. C2501

I. Performance and Payment Bonds (Applies to all public improvement contracts):
In accordance with RCW 39.08.010, the Contractor is required to file performance and payment bonds with the City Finance Director (acceptable forms are included in the bid package). These bonds are held conditioned upon meeting the statutory requirements of RCW 39.08.010.

II. Contract Retainage (Does not apply to federal transportation funded projects):
In accordance with RCW 60.28.011, the City will reserve 5 percent (5%) of the moneys earned by the Contractor for the payment and protection of the claims arising under the contract and any taxes, increases, and penalties which may be due from the Contractor. This 5 percent (5%) retainage, and an additional 10% retainage if selecting option I.B. above, will be held according to the Contractor's option as indicated below:

☐ Held in a non-interest bearing fund held by the City.

☐ Deposited in an escrow account in a bank or trust. Interest on monies so retained shall be paid to the Contractor. Contractor assumes responsibility for all related fees.

☐ Contractor to submit a Bond for 5% of the contract amount in lieu of retainage.

Contractor:

Signature	Title
Print Name	Date:

MAINTENANCE BOND

Bond No. _____

Amount $_____

KNOW ALL MEN BY THESE PRESENTS:

That _____ as Principal, hereinafter
(Here insert full name & address or legal title of CONTRACTOR)

called CONTRACTOR, and_____, as Surety,
(Here insert full name or legal title of Surety)

hereinafter called Surety, a corporation duly organized under the laws of the State of _____, and authorized to do business in the State of Washington as Surety, are held and firmly bound unto the **CITY OF MOUNTLAKE TERRACE; 23204 58th Avenue West, Mountlake Terrace, Washington 98043,** as Obligee, hereinafter called OWNER, in the penal sum of _____ Dollars ($_____), lawful money of the United States for which payment, well and truly be made, we bind ourselves, our heirs, executors, administrators, successors and assigns, jointly and severally, firmly by the presents.

WHEREAS, the above CONTRACTOR has completed the Contract Work for the **Westside Water Main Phase II and Overlay, MLT Project No. C2501,** and this work has been accepted by the OWNER as of _____, and it is a requirement of this acceptance that the CONTRACTOR post a Maintenance Bond in the amount specified above for a period of two (2) years to guarantee maintenance of the Contract Work of said project.

NOW, THEREFORE, THE CONDITION OF THIS OBLIGATION IS SUCH, That if the CONTRACTOR will correct or replace any defective work or materials discovered by OWNER within a period of two (2) years from the date of acceptance of such work by OWNER, then this obligation shall become null and void, otherwise it shall be and remain in full force and effect.

PROVIDED, HOWEVER, that the CONTRACTOR will be given a 15 day notice in which to maintain and/or repair the bonded items if required. If the CONTRACTOR fails to respond and the OWNER takes the necessary action to do the work, any and all expenses incurred by the OWNER will be payable on demand.

PROVIDED FURTHER, if legal action is necessary to cover expenses incurred by the OWNER, any additional legal and administrative costs incurred by such legal action shall be paid by the bond holder. However, in no event shall the Surety Company be obligated to pay more than the face amount of the bond.

The Surety agrees to indemnify, defend, and protect the City of Mountlake Terrace and the Public Works Board against any claim of direct or indirect loss resulting from the failure of the Contractor, its heirs, executors, administrators, successors, or assigns (or any of the employees, subcontractors, or lower tier subcontractors of the Contractor) to faithfully perform the Contract.

_____
CONTRACTOR (Seal)

_____
Title

_____
Surety

_____ (Seal)
Attorney-in-Fact

The Attorney-in-Fact who executes this Bond on behalf of the Surety, must attach a copy of his power-of-attorney as evidence of his authority.

(Seal)

Subscribed and sworn to before me this ____ day of _____, 20_____.

Notary Public:_____

My Commission expires _____

(Seal)

_____
Agency or Brokerage's name

_____
Address

_____
Name of Person to be Contacted

_____
Completed Form by (Type or Print)

_____
Completed form by (Signature)

_____
Telephone Number

City of Mountlake Terrace

_____
City of Mountlake Terrace Accepted date

_____
Public Works Director (Print Name)

_____
Public Works Director Signature

NON-DISCRIMINATION CLAUSE FOR PUBLIC CONTRACTS

City of Mountlake Terrace

Westside Water Main Phase II and Overlay

MLT Project No. C2501

Except to the extent permitted by a bona fide occupational qualification, the Contractor agrees as follows:

(1) The Contractor will not discriminate against any employee or applicant for employment because of race, creed, color, national origin, sex, or age. The Contractor will ensure that applicants are employed, and that employees are treated during employment, without regard to their race, creed, color, national origin, sex, or age.

Such action shall include, but not be limited to, the following: employment; upgrading; demotion of transfer; recruitment or recruitment advertising; layoff or termination; rates of pay of other forms of compensation; and selection for training.

(2) The Contractor will, in all solicitations for employees or job orders for employees placed with any employment agency, union or other firm or agency, state that all qualified applicants will receive consideration for employment without regard to race, creed, color, national origin, sex, or age. The words "equal opportunity employer" in advertisements shall constitute compliance with this section.

(3) The Contractor will send to each labor union or representative of workers with which he had a collection bargaining agreement or other contract or understanding, a notice advising said labor union or worker's representative of the Contractor's commitments under this section.

(4) The Contractor will include the provisions of the foregoing paragraphs (1), (2), and (3) in every subcontract or purchase order for the goods or services which are the subject matter of this contract.

In the event of noncompliance by the Contractor with any of the nondiscrimination provisions of the contract, the contracting agency shall have the right, at its option, to cancel the contract in whole or in part. If the contract is canceled after part performance, the contracting agency shall be obligated to pay the fair market value of the contract price, whichever is lower, for goods or services which have been received and accepted.

END OF NONDISCRIMINATION CLAUSE FOR PUBLIC CONTRACTS

PREVAILING WAGES

Washington State Prevailing Wage Rates
For Public Works Contracts

The law requires a contractor, subcontractor, or other person doing or contracting to do the whole or any part of the work contemplated by a public works contract to file a Statement of Intent to Pay Prevailing Wages (Intent) and an Affidavit of Wages Paid (Affidavit).

All tiers of contractors and subcontractors on a public works project must file Intent and Affidavit forms.

RCW 39.12.040 requires the filing of Intent and Affidavit forms by "the contractor and each and every subcontractor from the contractor or subcontractor." This requirement also applies to owner/operators and sole proprietors.

Agency may not release even the initial payment on a public works project without an approved Intent. Following the final acceptance of a public works project, the public agency must have an approved Affidavit from all contractors and all subcontractors at all tiers before the funds retained (retainage held) under RCW 60.28.011 may be released. Failure to follow this requirement of RCW 39.12.040 creates a liability for the agency for any unpaid wages under RCW 39.12.042.

Contractors who fail to file, or file false information on an Intent or Affidavit risk sanctions and penalties under RCW 39.12.050. Two violations of RCW 39.12.050 in a five year period will result in debarment from public work for a one year time frame.

Although not statutorily required, if you hire subcontractors it is recommended that you use the standards in RCW 39.12.040 that apply to the public agencies as a guide: Do not pay any money to a subcontractor until they have an approved Intent; and do not pay the final payment to a subcontractor until they have an approved Affidavit.

The WACs, and other Washington State prevailing wage rate and Benefit Code Key information are available on the Washington State Department of Labor and Industries website.

Prevailing Wage Rates for Public Works Contracts and Key Codes

Click Prevailing Wage Rates By Classifications, and/or click Look Up Apprentice Wage Rates or Copy and Paste website address

Prevailing Wage Rates by Classifications
https://lni.wa.gov/licensing-permits/public-works-projects/prevailing-wage-rates/

Look Up Apprentice Wage Rates
https://secure.lni.wa.gov/wagelookup/rates/apprentice-rates

Based upon the submittal deadline for this project the wage publication effective date to use is:

- **The bid opening date of April 22, 2026**

The county in which the public works project is located is:

- Snohomish County

A copy of the applicable wage rates is provided in Appendix E.

ADDENDA

SPECIAL PROVISIONS

APPENDICES

APPENDIX A

City of Mountlake Terrace 2024 Details and Specifications

City of Mountlake Terrace 2024 Details and Specifications

2024 Version Engineering Details & Specifications | Mountlake Terrace, WA
https://www.cityofmlt.com/2218/2024-Version-Engineering-Details-Specifi

APPENDIX B

INADVERTENT DISCOVERY LANGUAGE

Inadvertent Discovery Language

If ground disturbing activities encounter human skeletal remains during the course of construction, then all activity will cease that may cause further disturbance to those remains. **The area of the find will be secured and protected from further disturbance.**

The finding of human skeletal remains will be reported to the **county medical examiner/coroner** and local law enforcement in the most expeditious manner possible. The remains will not be touched, moved, or further disturbed.

The county medical examiner/coroner will assume jurisdiction over the human skeletal remains and make a determination of whether those remains are forensic or non-forensic.

If the county medical examiner/coroner determines the remains are non-forensic, then they will report that finding to the **Department of Archaeology and Historic Preservation (DAHP)** who will then take jurisdiction over the remains.

The DAHP will notify any appropriate cemeteries and all affected tribes of the find. The State Physical Anthropologist will make a determination of whether the remains are Indian or Non-Indian and report that finding to any appropriate cemeteries and the affected tribes. The DAHP will then handle all consultation with the affected parties as to the future preservation, excavation, and disposition of the remains.

In the event any archaeological or historic materials are encountered during project activity, work in the immediate are (initially allowing for 10' buffer, this number may vary by circumstances) must stop and the following actions taken:

1. Implement reasonable measures to protect the discovery site, including and appropriate stabilization of covering.
2. Take reasonable steps to ensure the confidentiality of the discovery site.
3. Take reasonable steps to restrict access to the site of the discovery.

The project proponent will notify the concerned Tribes and all appropriate county, state, and federal agencies, including the Department of Archeology and Historic Preservation (SHPO for Washington). The agencies and the Tribe(s) will discuss possible measures to remove or avoid cultural material, and will reach an agreement with the project proponent regarding actions to be taken and disposition of the material.

See Revised Code of Washington, Chapter 27.53 "Archaeological Sites and Resources," for applicable state laws and statutes. See Washington Executive Order 05-05, "Archaeological and Cultural Resources." Additional state and federal law(s) may also apply.

When to stop work:

Construction work may uncover previously unidentified Native American or Euro-American artifacts. This may occur for a variety of reasons, but may be associated with access restrictions during project development, or if the area contains impervious surfaces throughout most of the project area which would have prevented standard archaeological site discovery methods.

Work must stop when the following types of artifacts and/or features are encountered:

Native American artifacts may include (but are not limited to):

- Flaked stone tools (arrowheads, knives scrapers etc.)
- Waste flakes that resulted from the construction of flaked stone tools.
- Ground stone tools like mortars and pestles.
- Layers (strata) of discolored earth resulting from fire hearths. May be black, red or mottled brown and often contain discolored cracked rocks or dark soil with broken shell
- Human remains
- Structural remains- wooden beams, post holes, fish weirs

Euro-American artifacts may include (but are not limited to):

- Glass (from bottles, vessels, windows etc.)
- Ceramic (from dinnerware, vessels etc.)
- Metal (nails, drink/food cans, tobacco tins, industrial parts etc.)
- Building materials (bricks, shingles etc.)
- Building remains (foundations, architectural components etc.)
- Old Wooden Posts, pilings, or planks (these may be encountered above or below water)
- Even what looks to be old garbage could very well be an important archaeological resource
- Remains of ships or sea-going vessels, marine hardware etc.
- Old farm equipment may indicate historic resources in the area

When in doubt, call it in!

CONTACTS:
Project Proponent:
Jurisdiction: City of Mountlake Terrace

Contact Name: Jeff Rivers, Civil Engineer I
Phone/Email: 425-744-6203/ jrivers@mltwa.gov
Alternate Contact Name: Roth Seng, Civil Engineer II
Phone/Email: 425-744-6274/ rseng@mltwa.gov

Public Works Board (PWB)
Izabela Kocan, Board Liaison
564-669-1788 or Izabela.Kocan@Commerce.wa.gov

Department of Archeology and Historic Preservation (DAHP)
Allyson Brooks, Ph.D., State Historic Preservation Officer/Director
360.586.3066 or Allyson.brooks@dahp.wa.gov
Snohomish County Medical Examiner
24 Hour Investigator Phone: 425-438-6200
9509 29th Ave West
Everett, WA 98204

APPENDIX C

Project Sign

Project Sign

Westside Water Main Phase II and Overlay

Funded By:

City of Mountlake Terrace and
Washington State Public Works Board

$ X,XXX,XXX.XX – TBA

["Contractor"]

1. The sign will be made of 1/2 to 3/4 inch, exterior grade/MDO plywood (APA rating A-B) Project sign posts shall be a minimum of two (2) - 4x4 treated wood posts and extra posts may be required if directed by Engineer. Sign posts shall be 3 feet minimum embedded below grade. Project sign shall have 4 feet minimum clearance from ground to bottom of signage.
2. Background color is white, text color is black, and text styles (font) is Highway Gothic. Lettering will be a minimum of four inches for project name, three inches for funding sources, and 2 inches for other wording. All lettering symbols, and logos must be three inches minimum from the edges.
3. Logo coloring is a follows:
    a. Mountlake Terrace – top and bottom lines green, middle line blue
    b. WA Public Works Board (PWB) – PWB Logo coloring: https://www.commerce.wa.gov/
4. Contractor shall submit "Project Sign" layout to Project Manager/Engineer for approval. If the Project sign has been constructed and installed without approval by Project Manager/Engineer, then all costs related to "Project Sign" will be at Contractor's own expense.
5. The project sign shall be 4x5 ft. min. See Special Provision Section 8-21

APPENDIX D

Draft Geological Hazards Evaluation

Westside Water Main Phase 2 PRV

Geological Hazards Evaluation

Mountlake Terrace, WA

March 2, 2026 | Terracon Project No. 81265020

Prepared for:

City of Mountlake Terrace
23204 58th Ave. W
Mountlake Terrace, WA 98043

DRAFT

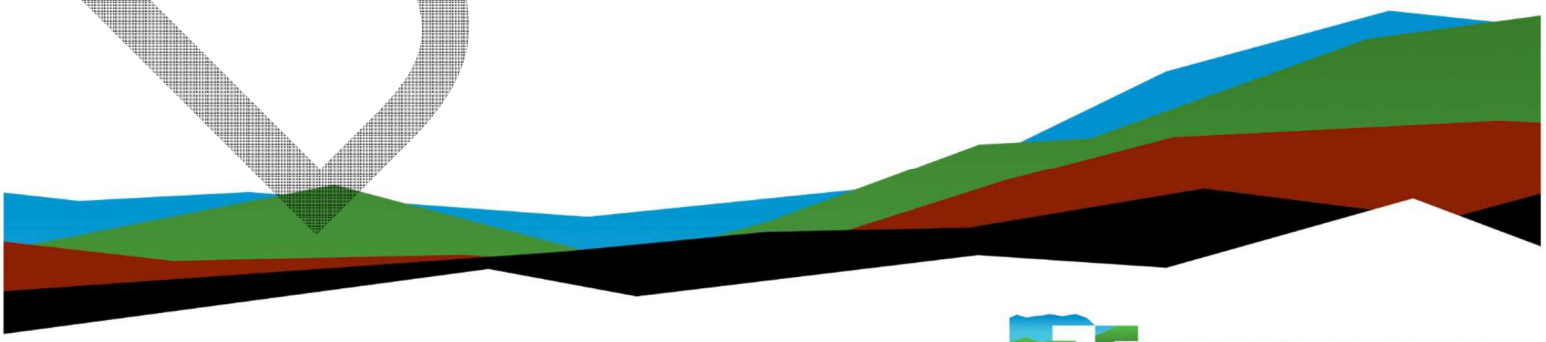

Terracon
Explore with us

Nationwide
Terracon.com

- Facilities
- Environmental
- Geotechnical
- Materials

March 2, 2026

City of Mountlake Terrace
23204 58th Ave. W
Mountlake Terrace, WA 98043

Attn: Gary Schimek – Public Works Director
P: (425) 774-6221
E: gschimek@mltwa.gov

Re: Geological Hazards Evaluation
Westside Water Main Phase 2 PRV
6716 228th St SW
Mountlake Terrace, WA
Terracon Project No. 81265020

Dear Mr. Schimek:

We have completed the scope of services for the above referenced project in general accordance with Terracon Proposal No. P81265020 dated February 6, 2026. This report presents the findings of site-specific geologic hazards (i.e. steep slopes and landslides) in the vicinity of the proposed development. Our conclusion from our observations and evaluation is that the risk of geologic hazards impacting the proposed development is low. Presented herein is supporting information of this conclusion.

This letter was prepared in general accordance with Mountlake Terrace Municipal Code (MTMC) 16.15.200 and 16.15.430 and was prepared by a professional meeting the qualifications identified in MTMC 16.15.500.

General Information for Critical Areas Report

Proposal Name: Westside Water Main Phase 2 PRV

Date of Geological Assessment: February 9, 2026

Date(s) Prepared: February 18-27, 2026

Site Location: 6716 228th St SW, Mountlake Terrace, WA

Parcel Number: 00488900100103

Report Prepared By: Zachary L Koehn, P.E. and Hannah E. Bortel, P.G. of Terracon Consulting, Inc. (Terracon). Mr. Koehn is a licensed professional engineer with 15 years of professional experience in Washington providing geotechnical and geological consulting services for private and public sector projects. Ms. Bortel is a licensed professional

geologist with 2 years of experience in Ohio modeling groundwater flow and 3+ years of experience in Washington performing geological and geotechnical evaluations while with Terracon.

Applicant: City of Mountlake Terrace Public Works

Project Description

Item	Description
Information Provided	▪ Email request for geological hazard evaluation prepared by the City of Mountlake Terrace dated February 3, 2026 ▪ Water main plan and profile prepared by the City of Mountlake Terrace dated January 30, 2026 ▪ Westside Watermain PH2 Slope Analysis (Topographic map of upper portion of slope) provided by City of Mountlake Terrace via email on Feb. 3, 2026
Site Location and Address	**Address:** 6716 228th St SW, Mountlake Terrace, WA **Parcel Number:** 00488900100103 **Latitude (approximate):** 47.7920 ° N **Longitude (approximate):** 122.32419 ° W See **Site Location**
Project Description	We understand the City is planning to replace and relocate the water main vault along 228th St SW and 68th Ave W in Mountlake Terrace, WA.
Proposed Improvements	Installation of a 7 by 15-foot pressure reducing vault near the intersection on 228th ST SW and 68 Pl. W.
Existing Improvements	Existing water main vault, sidewalk, and right of way.
Current Ground Cover	Ground cover at the vault location consists of landscaping grasses and bushes. The surrounding area consists of young to mature trees and bushes.
Free-Standing Retaining Walls	No retaining walls are proposed for this improvement. However, there is an existing approximately 15-foot high rockery on the adjoining, downslope lot near the toe of the slope.

Geotechnical Characterization

Mapped Surface Geology: The site is mapped as Pleistocene aged Vashon Stade glacial till (Qgt) and consists of silty sand with variable gravel and cobbles (Minard, 1983). Depending on the geologic map that is used, the site is mapped as Qgt or Vashon Stade

DRAFT

advanced glacial outwash (Qva). In general, the subsurface conditions encountered during exploration efforts and site reconnaissance were consistent with the mapped geology.

Subsurface Geology: A description of the subsurface geology is described below.

- **Existing Fill:** Our subsurface exploration at the site encountered previously placed fill consisting of very loose to loose silty sand with gravel to depths of about 10-feet below ground surface (bgs).
- **Glacial Till:** Beneath the previously placed fill, glacial till consisting of very dense silty sand with gravel to depths of approximately 23-feet bgs.
- **Advanced Glacial Outwash:** Very dense advanced glacial outwash consisting of poorly graded sand with silt was found beneath the glacial till to the full extent of the exploration.

Groundwater Potential: Due to the low permeability of the soils encountered, a relatively long period may be necessary for groundwater level to develop and stabilize. Based on the performed boring, groundwater was not encountered. Neither satellite imagery nor site reconnaissance suggest that groundwater exists at the site. The nearest water source is located at Hall Creek approximately ¼-mile from the site at a 133-foot lower elevation.

Landslide Potential

We've reviewed geologic maps, literature, performed explorations, and a site reconnaissance for this landslide hazard evaluation. Other information reviewed to indicate a low landslide hazard risk:

- The site areas mapped as greater than 40-percent slopes do not have any mapped landslide hazards
    - There is one (1) mapped prehistoric (greater than 150 years ago) landslide mapped within ¼-mile of the site.
- Our visual assessment based on available aerial imagery and a site reconnaissance did not identify any of the following key historical landslide indicators within the immediate vicinity of the site:
    - Head scarps
    - Undulated topography
    - Bare/unvegetated areas of hillsides/slopes (the walking path up the slope not withstanding)
    - Bent trees (J-shaped trees)
        - A bordering property has evidence of bent trees approximately 100 feet from the slope immediately under the site.

DRAFT

For the reasons stated above, the landslide hazard risk within the immediate vicinity of the proposed improvements is considered low. In our opinion, if a landslide were to occur, it would occur outside the boundary of the site or at the top of the slope near the vault within the over-steepened existing fill soils identified by our subsurface exploration.

Buffers

According to MTMC 16.15.430(2)(C), a minimum 30-foot buffer is required for all developments near a steep slope critical area. Based on the Water main plans provided by the City, the proposed development appears to result in about an 18-foot buffer. The City's code does not present an option for construction within this buffer. However, other jurisdiction codes commonly permit construction within a buffer pending geotechnical engineering evaluation and a conclusion that the proposed construction presents a low risk.

In our opinion, the buffer requirement is not applicable as the proposed development is a like-kind replacement of an existing structure and the resulting civil improvement generates a larger buffer than the existing structure. Furthermore, the construction can be performed such that the steep slope condition improves and associated risks are reduced. See **Mitigation** section for discussion of options for improving stability of the steep slope condition.

Summary of Findings

Based on site topography, mapped geologic units, USGS articles, and drawings from the water main plan and profile, it is our opinion that the site has a low risk of a deep-seated landslide hazard (Savage, 2000). Based on our findings, the proposed development will not impact steep slope critical area.

While the area is classified as a Class IV very high hazard steep slope, based on the geologic units, and the one-to-one replacement with an increased buffer zone, the development will not destabilize the slope during the life of the structure. If movement were to occur on the slope, we believe these would occur as surficial sloughing of topsoil, which would be considered a maintenance issue. A shallow, surficial slope failure is unlikely to affect adjacent properties or civil infrastructure. See **Mitigation** section for discussion on reducing surficial sloughing potential.

Mitigation

While it is our opinion that the landslide hazard risk is low for the overall slope condition, shallow, localized sloughing could occur within the over steepened existing fill soils near the top of the slope and/or anywhere vegetation is removed. To reduce the risk of localized events, the following mitigation measures are recommended:

DRAFT

Regrading: Laying back the over steepened fill soils in the area near the top of the slope to a flatter inclination is the most effective means for improving the steep slope condition. The presence of the existing vault may limit the extent of the regrading and therefore should be removed. Following installation of the new vault, grades should be adjusted via structural fill placement or regrading to 40-percent or less, which presence an improvement to the nearly 50-percent grade of the existing slope.

Revegetation: To reduce surficial erosion and raveling that may occur, we recommend re-vegetating the slope after structural fill placement and grading. An erosion control mat, such as a jute mat, should be placed and staked to the slope. We recommend revegetating the slope with vegetation that develops moderately deep roots, such as tall grasses and small- to medium- shrubs native to the region.

We appreciate the opportunity to be of service to you on this project. If you have any questions concerning this report or if we may be of further service, please contact us.

Sincerely,

Terracon

Hannah E. Bortel, L.G.
Group Manager

Zachary L. Koehn, P.E.
Geotechnical Department Manager

DRAFT

References

Baum, R., Harp, E., and Highland, L. (2007) Landslide Hazards in the Seattle, Washington, Area, U.S. Geological Survey, Fact Sheet 2007-3005

Minard, J.P. (1983) Geologic map of the Edmonds East and part of the Edmonds West quadrangles, Washington, U.S. Geological Survey, Miscellaneous Field Studies Map MF-1541, 1:24,000

Mountlake Terrace Municipal Code (MTMC) (2025), Critical Areas, 16.15.200, 16.15.430, and 16.15.500

Savage, W.Z., Morrissey, M.M., and Baum, R.L. (2000) Geotechnical Properties for Landslide-Prone Seattle – Area Glacial Deposits, USGS Open-File Report 00-228, 5p.

Snohomish County Datasets (2022) Snohomish County Open Data Portal

DRAFT

Attachments

DRAFT

Exploration and Testing Procedures

Field Exploration

Number of Explorations	Type of Exploration	Approximate Exploration Depth (feet)	Location
1	Soil Boring	50½	Top of Steep Slope

Boring Layout and Elevations: Terracon personnel provided the boring layout using handheld GPS equipment (estimated horizontal accuracy of about ±10 feet) and referencing existing site features. Approximate ground surface elevations were obtained by interpolation from Google Earth Pro. If elevations and a more precise boring layout are desired, we recommend the boring location be surveyed.

Soil Boring Procedures: We advanced the borings with a track-mounted rotary drill rig using hollow stem Four samples were obtained in the upper 20 feet of each boring and at intervals of 5 feet thereafter. In the split-barrel sampling procedure, a standard 2-inch outer diameter split-barrel sampling spoon was driven into the ground by a 140-pound automatic hammer falling a distance of 30 inches. The number of blows required to advance the sampling spoon the last 12 inches of a normal 18-inch penetration is recorded as the Standard Penetration Test (SPT) resistance value. The SPT resistance values, also referred to as N-values, are indicated on the boring logs at the test depths. For safety purposes the boring was backfilled with bentonite chip after their completion in accordance with Washington Department of Ecology requirements related to completion of borings.

We also observed the boreholes while drilling and at the completion of drilling for the presence of groundwater. Groundwater was not observed at these times in the boreholes.

The sampling depths, penetration distances, and other sampling information was recorded on the field boring logs. The samples were placed in appropriate containers and taken to our soil laboratory for testing and classification by a Geotechnical Engineer. Our exploration team prepared field boring logs as part of the drilling operations. These field logs included visual classifications of the materials observed during drilling and our interpretation of the subsurface conditions between samples. Final boring logs were prepared from the field logs. The final boring logs represent the Geotechnical Engineer's interpretation of the field logs and include modifications based on observations and tests of the samples in our laboratory.

DRAFT

Laboratory Testing

The project engineer reviewed the field data and assigned laboratory tests. The laboratory testing program included the following types of tests:

- ASTM D2216 Standard Test Methods for Laboratory Determination of Water (Moisture) Content of Soil and Rock by Mass
- ASTM D422 Standard Test Method for Particle-Size Analysis of Soils
- ASTM D1140 Standard Test Methods for Determining the Amount of Material Finer than 75-µm (No. 200) Sieve in Soils by Washing
- ASTM D2974 Standard Test Methods for Determining the Water (Moisture) Content, Ash Content, and Organic Material of Peat and Other Organic Soils

The laboratory testing program often included examination of soil samples by an engineer. Based on the results of our field and laboratory programs, we described and classified the soil samples in accordance with the Unified Soil Classification System.

DRAFT

Photography Log

Slope beneath water main vault

Rockery wall at toe of slope of the steep slope

Bent tree on bordering property

Mature tree along slope

Site Maps

Contents:

Vicinity Map
Exploration Plan
Critical Areas Map
Water Main Plan and Profile (provided by City of Mountlake Terrace)

DRAFT

Vicinity Map

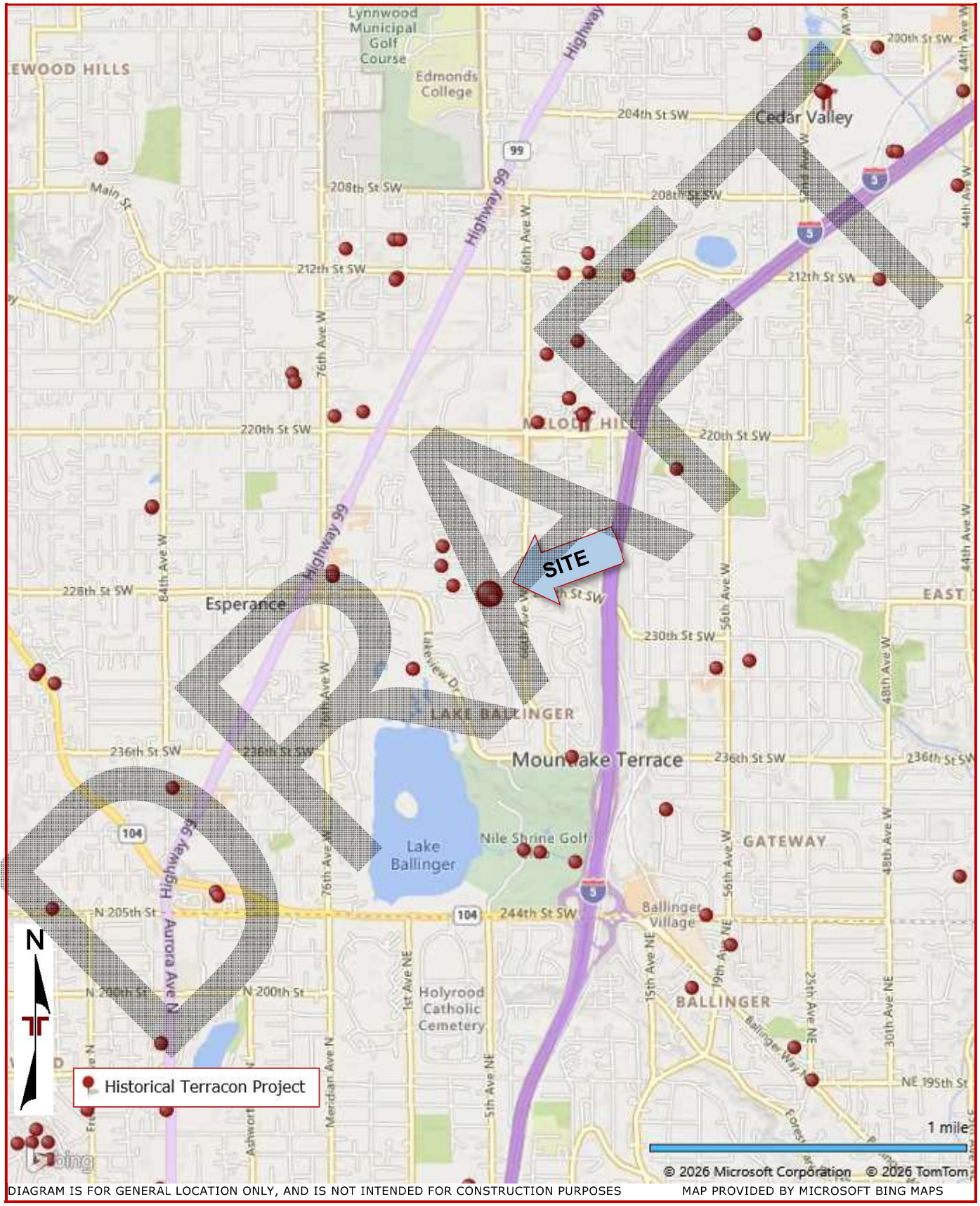

DIAGRAM IS FOR GENERAL LOCATION ONLY, AND IS NOT INTENDED FOR CONSTRUCTION PURPOSES

MAP PROVIDED BY MICROSOFT BING MAPS

Exploration Plan

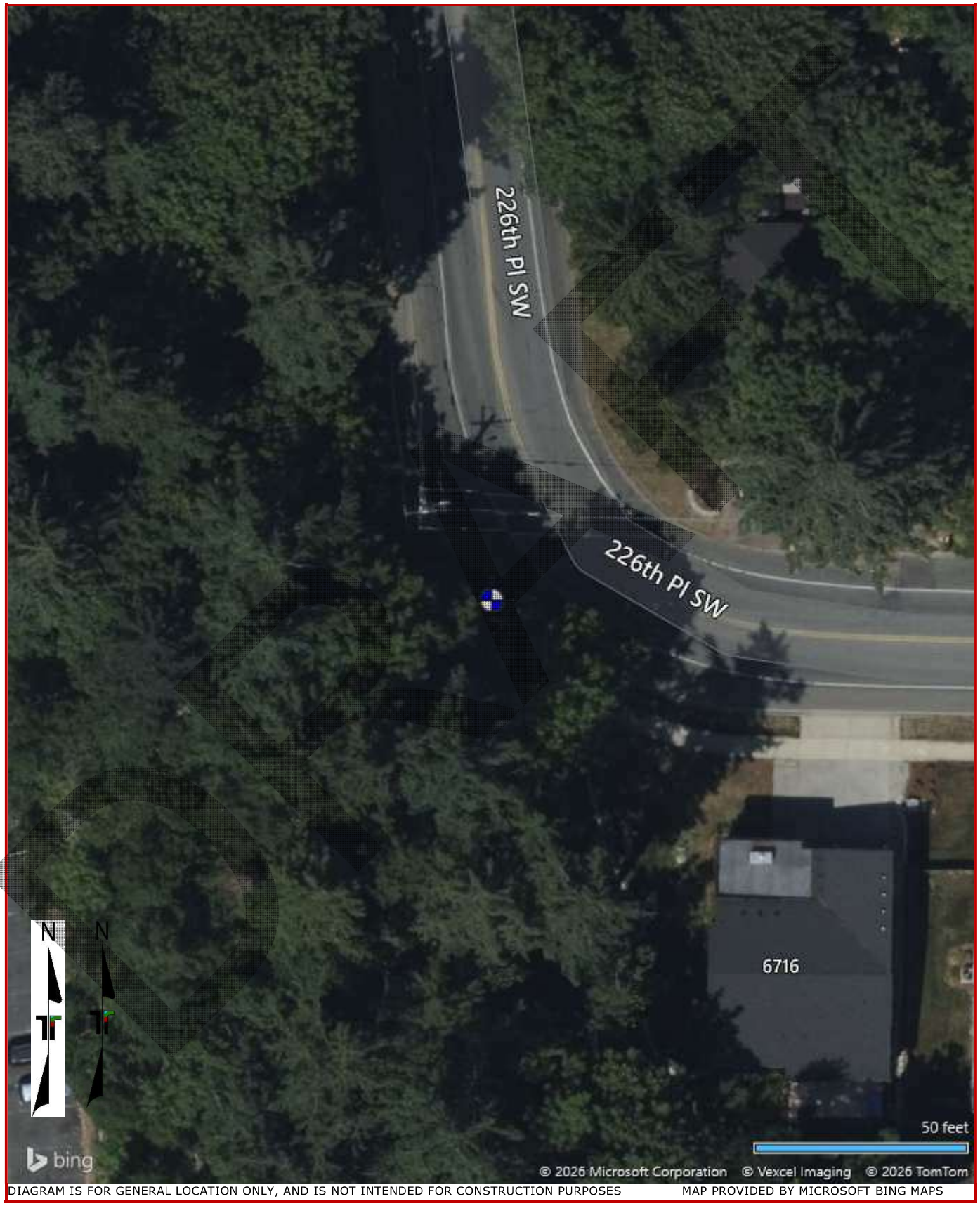

DIAGRAM IS FOR GENERAL LOCATION ONLY, AND IS NOT INTENDED FOR CONSTRUCTION PURPOSES MAP PROVIDED BY MICROSOFT BING MAPS

Critical Areas Map

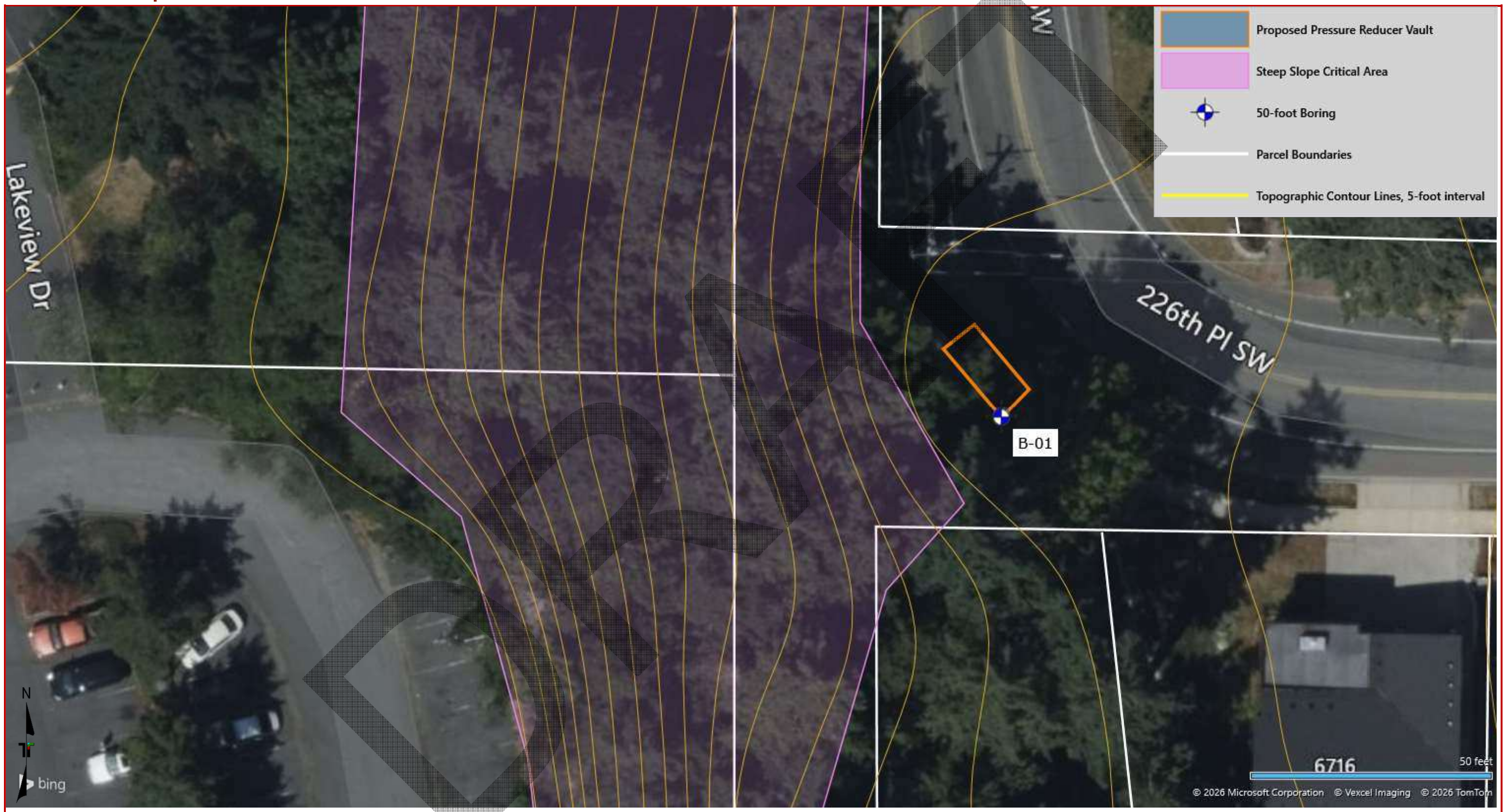

DIAGRAM IS FOR GENERAL LOCATION ONLY, AND IS NOT INTENDED FOR CONSTRUCTION PURPOSES

MAP PROVIDED BY MICROSOFT BING MAPS

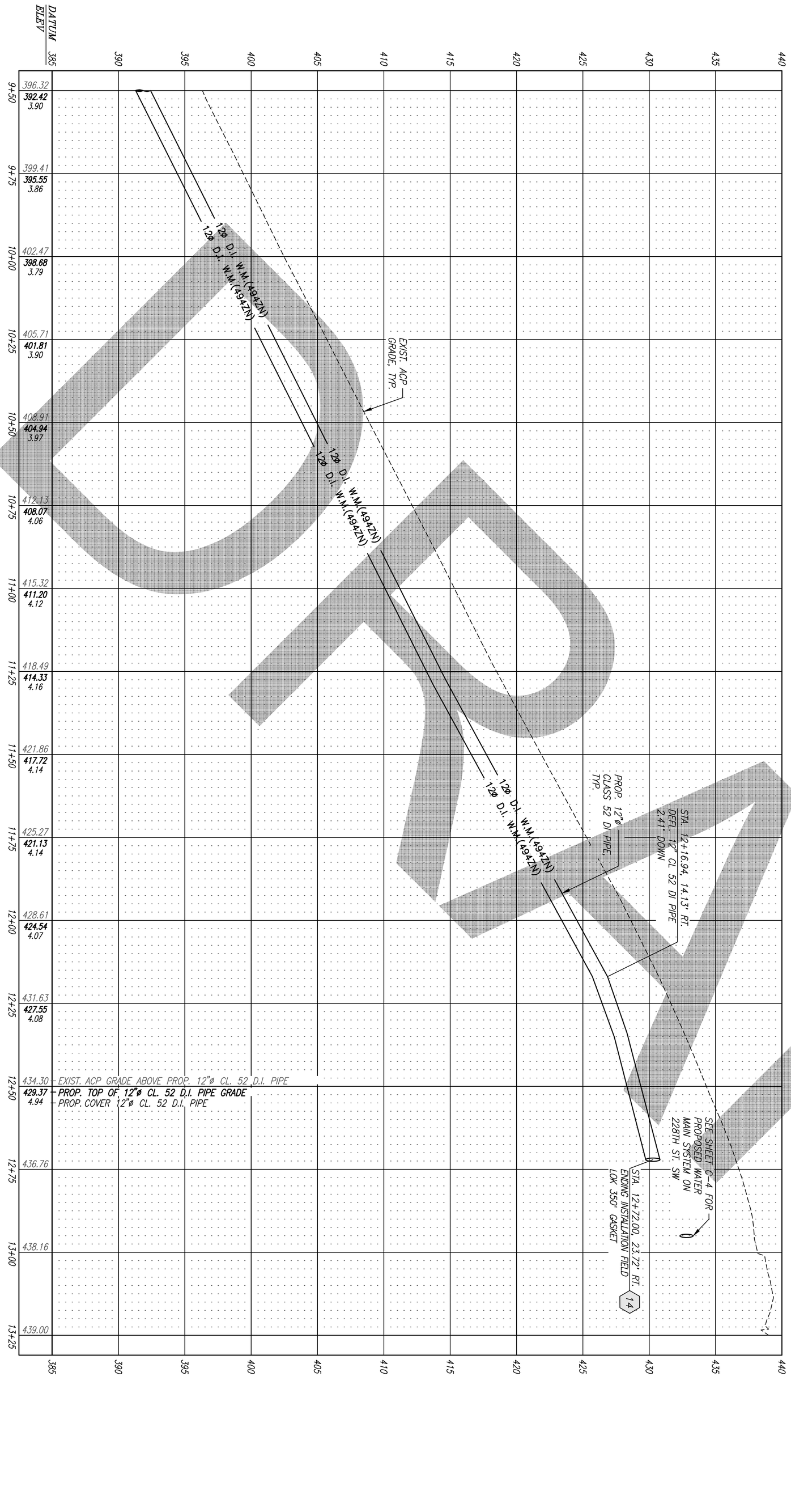

2 / C-3 WATER MAIN PROFILE

SCALE: H: 1"=20'-0"
V: 1"=5'-0"

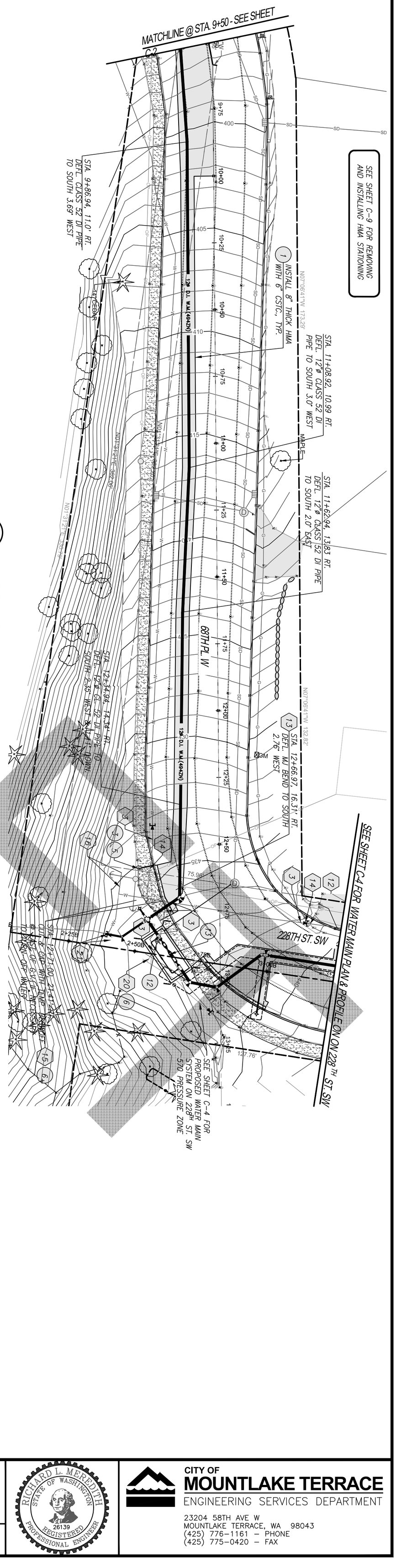

1 / C-3 WATER MAIN PLAN

SCALE: 1"=20'-0"

SCALE IN FEET
20 0 20 40 60

DRAWING NO.: C-3	DRAWN BY: R. SENG		APPROVED BY: RICH MEREDITH	DATE: 1/30/2026
	CHECKED BY: MAN STRUONG		PROJECT ENGINEER: R. SENG	DATE: 1/30/2026
	REVISION	DATE	DESCRIPTION	
HORIZONTAL SCALE: 1"=20'-0"				
VERTICAL SCALE: VARIES				

N:\ENGINEER\CONSTRUCTION PROJECTS\2025\C2501 - WESTSIDE WATER MAIN IMPROVEMENTS II\2 - DESIGN\DWGS\WM PLANS\WESTSIDE WATER MAIN IMPROVEMENTS II.DWG

WESTSIDE WATER MAIN IMPROVEMENTS PHASE II

226TH PL. W. / 67TH PL. W / 228TH ST. SW

MLT PROJECT No. C2501

WATER MAIN PLAN AND PROFILE

RICHARD L. MEREDITH
STATE OF WASHINGTON
26139
REGISTERED
PROFESSIONAL ENGINEER

CITY OF
MOUNTLAKE TERRACE
ENGINEERING SERVICES DEPARTMENT
23204 58TH AVE W
MOUNTLAKE TERRACE, WA 98043
(425) 776-1161 - PHONE
(425) 775-0420 - FAX

PLOT DATE: Friday, January 30, 2026 3:10:08 PM

Exploration and Laboratory Results

Contents:

Boring Log
Grain Size Distribution

DRAFT

Westside Water Main Phase 2 PRV - Critical Areas Report
6716 228th St SW, Mountlake Terrace, WA, 98043,USA
Terracon Project No. 81265020

Latitude: 47.7922° Longitude: -122.3244°

BORING LOG NO. B-01

Terracon
21905 64th Ave. W, Ste. 100
Mountlake Terrace, WA 98043-2251

Surface Elevation:
437.2(Ft) +/-

Graphic Log	Lithology Depth (Ft.)	Material Description	Depth (Ft.)	Elevation (Ft.)	Sample Type	Recovery (In.)	Field Test Results	Water Content (%)	Percent Gravel	Percent Sand	Percent Fines	Organic Content (%)	Ash Content (%)
				437.2									
		FILL- SILTY SAND, fine to coarse grained sand, grayish brown to brown, moist, very loose, with wood fragments and fine roots											
			5			4	2-1-2 N = 3						
						3	4-1-2 N = 3						
						2	2-1-WoH N = 1						
	10.0		10	427.2									
	10.5	at ~10-ft: desiccated wood fragments		426.7		15	16-31-31 N = 62	5	29.6	41.2	29.2	1	99
		SILTY SAND WITH GRAVEL (SM), fine to coarse grained sand, gray, moist, very dense, trace fine roots				16	23-30-32 N = 62						
	15.0		15	422.2									
		at ~15-ft: decreased gravel content				12	25-50/6" N = 50/6"	7			30.8		
						5	50/5"						
			20			5	50/5"						
	23.5			413.7									
		SILTY SAND (SM), trace gravel, fine to medium grained sand, gray, moist, very dense											
	25.0			412.2									
		at ~25-ft: 1/4 -1/2" silt nodules	25			16	26-35-32 N = 67						

See Exploration and Testing Procedures for a description of field and laboratory procedures used and additional data (If any).

See Supporting Information for explanation of symbols and abbreviations.

Notes
Surface: Landscaping grass and "forest" duff

Water Level Observations
Groundwater not encountered

Advancement Method
0-50.2 Ft. 8" Hollow Stem Auger

Abandonment Method
Boring backfilled with bentonite chips upon completion.

Hammer Type
Automatic

Driller
Boretec 1

Logged By
Hannah Bortel

Boring Started
02/09/2026

Boring Completed
02/09/2026

DRAFT

Westside Water Main Phase 2 PRV - Critical Areas Report
6716 228th St SW, Mountlake Terrace, WA, 98043,USA
Terracon Project No. 81265020

Latitude: 47.7922° Longitude: -122.3244°

BORING LOG NO. B-01

Terracon
21905 64th Ave. W, Ste. 100
Mountlake Terrace, WA 98043-2251

Surface Elevation:
437.2(Ft) +/-

Graphic Log	Lithology Depth (Ft.)	Material Description	Depth (Ft.)	Elevation (Ft.)	Sample Type	Recovery (In.)	Field Test Results	Water Content (%)	Percent Gravel	Percent Sand	Percent Fines	Organic Content (%)	Ash Content (%)
				410.7									
		at ~25-ft: 1/4 -1/2" silt nodules (continued)	30			17	21-26-40 N = 66	9	2.7	80.6	16.7		
			35			3	50/3"						
			40			15	14-30-36 N = 66						
			45			12	44-43-50/4" N = 93/10"	7	1	78.7	20.3		
			50			2	50/2"						
		Boring Terminated at 50.2 Ft											

DRAFT

See Exploration and Testing Procedures for a description of field and laboratory procedures used and additional data (If any).

See Supporting Information for explanation of symbols and abbreviations.

Notes
Surface: Landscaping grass and "forest" duff

Water Level Observations
Groundwater not encountered

Advancement Method
0-50.2 Ft. 8" Hollow Stem Auger

Abandonment Method
Boring backfilled with bentonite chips upon completion.

Hammer Type
Automatic

Driller
Boretec 1

Logged By
Hannah Bortel

Boring Started
02/09/2026

Boring Completed
02/09/2026

Terracon
110
Lynnwood, WA 98036-6365

Particle-Size Distribution of Soils Using Sieve Analysis

ASTM D422-Method B

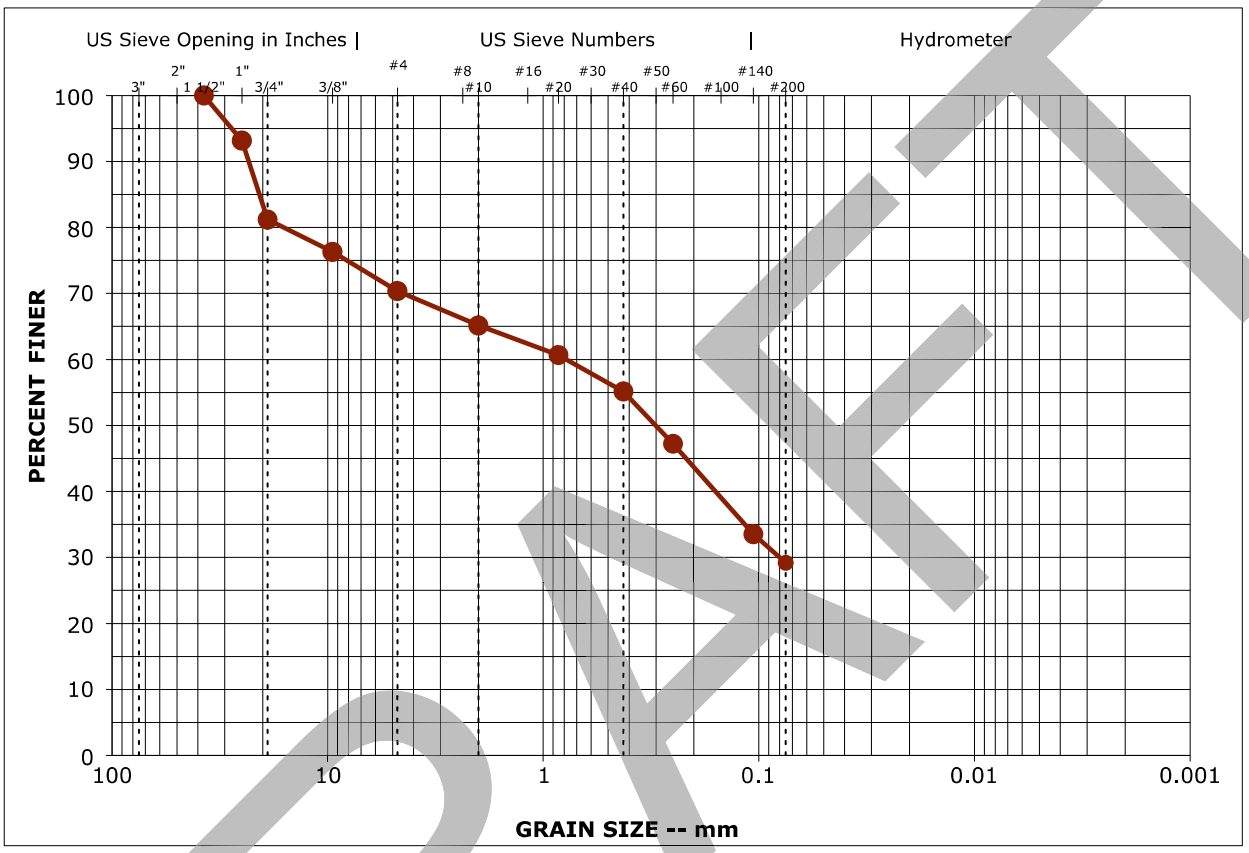

Boring ID	Depth (Ft.)	Description	USCS	Specific Gravity
B-01	10 - 11.5	Silty Sand with Gravel	SM	N/A

% Cobbles	% Gravel	% Sand	% Fines	% Silt	% Clay
0.0	29.6	41.2	29.2	N/A	N/A

Sieve	% Finer	Sieve	% Finer
3"	100.0	#40	55.2
2"	100.0	#60	47.2
1 1/2"	100.0	#140	33.5
1"	93.2	#200	29.2
3/4"	81.2		
3/8"	76.3		
#4	70.4		
#10	65.2		
#20	60.7		

Grain Size		Coefficients	
D_{100}	37.500	C_C	
D_{60}	0.781		
D_{30}	0.080	C_U	
Estimated D_{10}			

Remarks
Lab # 1319A

DRAFT

Terracon
110
Lynnwood, WA 98036-6365

Laboratory Determination of Water (Moisture) Content of Soil and Rock

ASTM D2216

Boring ID	B-01
Depth (ft.)	10 - 11.5
Method Used	B
Water Content (%)	5.3
Visual Description	Silty Sand with Gravel

DRAFT

Organic Content in Soils by Loss on Ignition

ASTM D2974

Boring ID	Depth (ft.)	Test Method	Ash Content (%)	Organic Content (%)	Moisture Content (%)	Temp. (C)	Date Tested	Tested By
B-01	10 - 11.5	A	99.0	1.0	5.9	440	02/24/26	Luckey, Shauna

Additional Project Notes / Comments:

DRAFT

Amount of Material Finer than 75-µm (No. 200) Sieve in Soils by Washing
ASTM D1140

Boring ID @ Depth:	B-01 @ 15 - 16
Initial Weight Dry (g):	410.5
Percent Finer than No. 200 (%):	30.8
Method Used:	B
Time Specimen Soaked (min):	50
Date Tested:	02/26/26
Sample Tested By:	Luckey, Shauna
Remarks:	

DRAFT

Terracon
110
Lynnwood, WA 98036-6365

Laboratory Determination of Water (Moisture) Content of Soil and Rock

ASTM D2216

Boring ID	B-01
Depth (ft.)	15 - 16
Method Used	B
Water Content (%)	6.6
Visual Description	Silty Sand with Gravel

DRAFT

Terracon
110
Lynnwood, WA 98036-6365

Particle-Size Distribution of Soils Using Sieve Analysis

ASTM D422-Method B

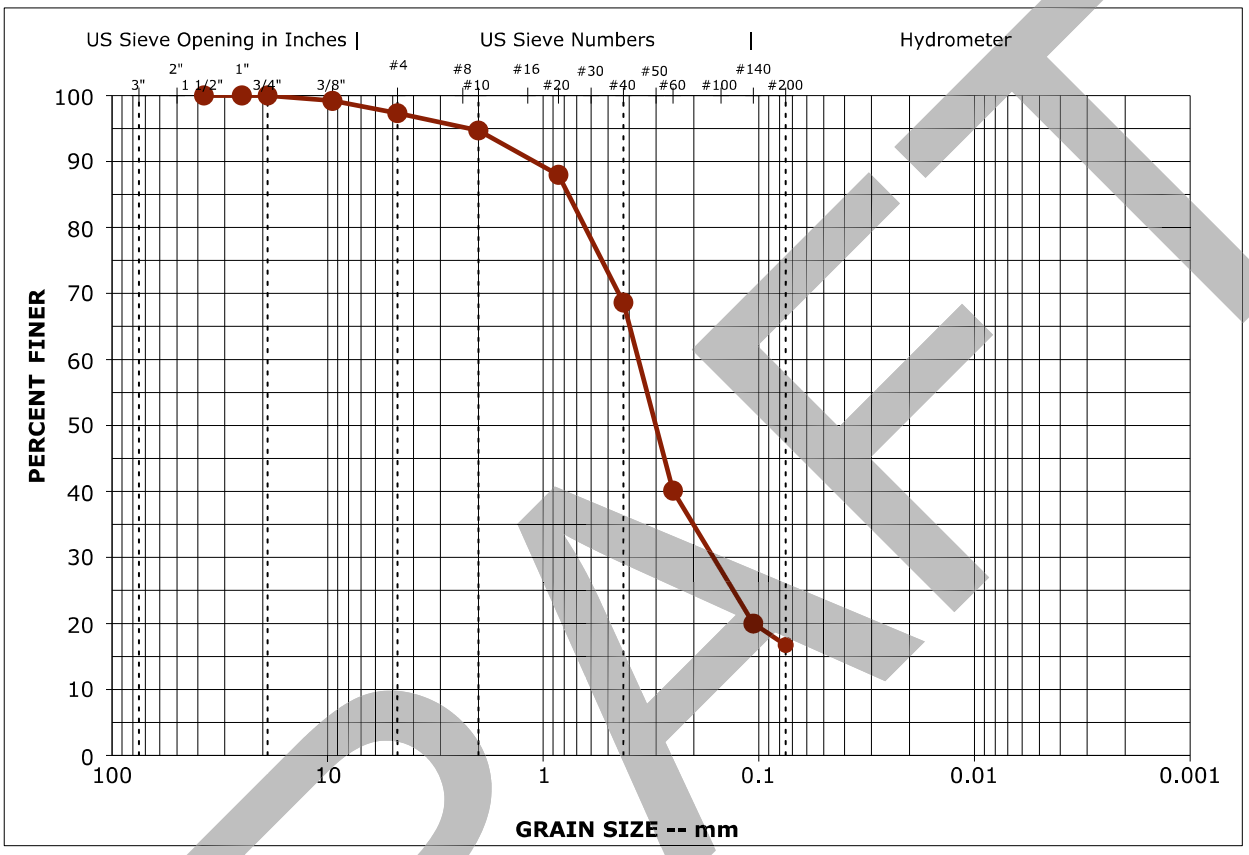

Boring ID	Depth (Ft.)	Description	USCS	Specific Gravity
B-01	30 - 31.5	Silty Sand with Gravel	SM	N/A

% Cobbles	% Gravel	% Sand	% Fines	% Silt	% Clay
0.0	2.7	80.6	16.7	N/A	N/A

Sieve	% Finer	Sieve	% Finer
3"	100.0	#40	68.6
2"	100.0	#60	40.1
1 1/2"	100.0	#140	20.0
1"	100.0	#200	16.7
3/4"	100.0		
3/8"	99.2		
#4	97.3		
#10	94.7		
#20	88.0		

Grain Size		Coefficients	
D_{100}	19.000	C_C	
D_{60}	0.362		
D_{30}	0.162	C_U	
Estimated D_{10}			

Remarks
Lab # 1319C

DRAFT

Terracon
110
Lynnwood, WA 98036-6365

Laboratory Determination of Water (Moisture) Content of Soil and Rock

ASTM D2216

Boring ID	B-01
Depth (ft.)	30 - 31.5
Method Used	B
Water Content (%)	8.9
Visual Description	Silty Sand with Gravel

DRAFT

Terracon
110
Lynnwood, WA 98036-6365

Particle-Size Distribution of Soils Using Sieve Analysis

ASTM D422-Method B

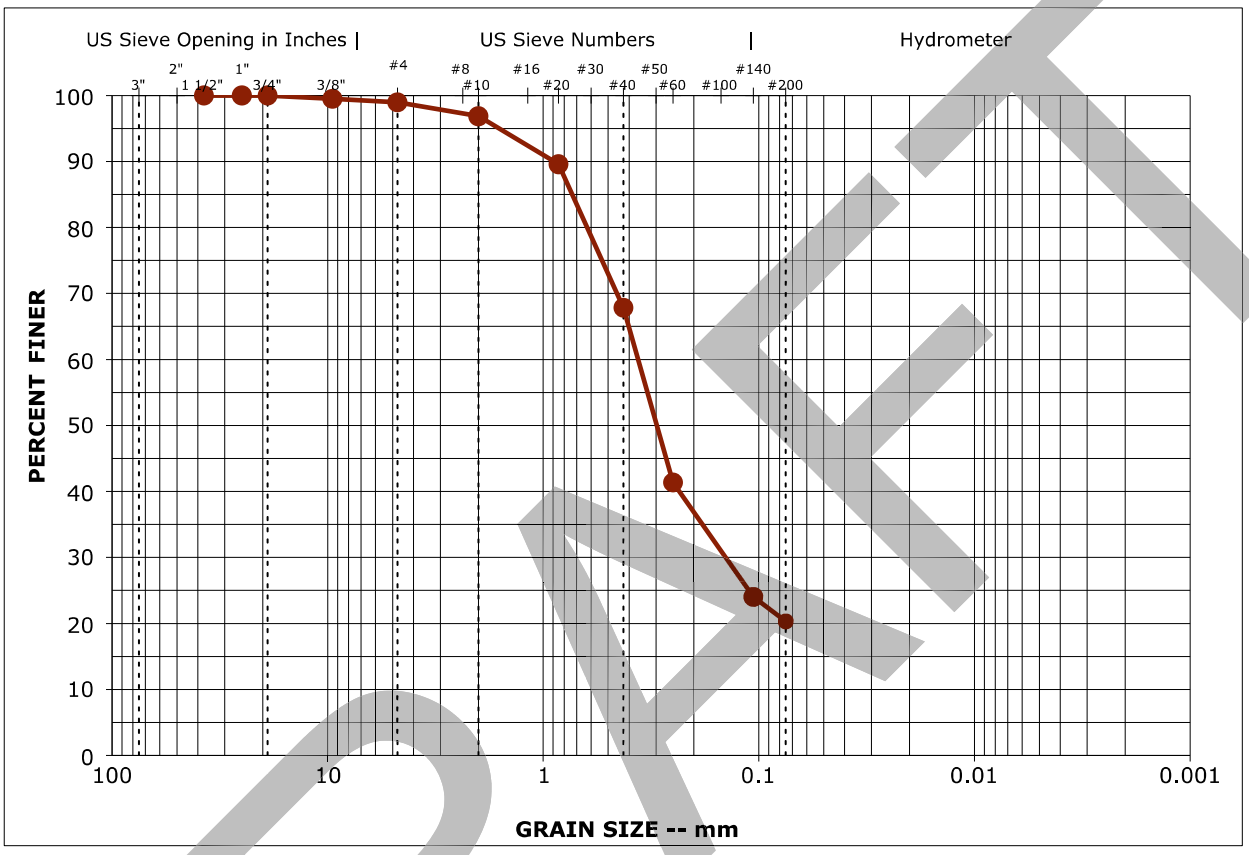

Boring ID	Depth (Ft.)	Description	USCS	Specific Gravity
B-01	45 - 46.33	Silty Sand with Gravel	SM	N/A

% Cobbles	% Gravel	% Sand	% Fines	% Silt	% Clay
0.0	1.0	78.7	20.3	N/A	N/A

Sieve	% Finer	Sieve	% Finer
3"	100.0	#40	67.8
2"	100.0	#60	41.4
1 1/2"	100.0	#140	24.0
1"	100.0	#200	20.3
3/4"	100.0		
3/8"	99.5		
#4	99.0		
#10	96.9		
#20	89.6		

Grain Size		Coefficients	
D_{100}	19.000	C_C	
D_{60}	0.363		
D_{30}	0.143	C_U	
Estimated D_{10}			

Remarks
Lab # 1319D

DRAFT

Terracon
110
Lynnwood, WA 98036-6365

Laboratory Determination of Water (Moisture) Content of Soil and Rock

ASTM D2216

Boring ID	B-01
Depth (ft.)	45 - 46.33
Method Used	B
Water Content (%)	7.3
Visual Description	Silty Sand with Gravel

DRAFT

Supporting Information

Contents:

General Notes
Unified Soil Classification System
Mountlake Terrace Municipal Code

DRAFT

General Notes

Sampling	Water Level	Field Tests
Auger Cuttings	Water Initially Encountered	N Standard Penetration Test Resistance (Blows/Ft.)
Modified California Ring Sampler	Water Level After a Specified Period of Time	(HP) Hand Penetrometer
Rock Core	Water Level After a Specified Period of Time	(T) Torvane
Dynamic Cone Penetrometer	Cave In Encountered	(DCP) Dynamic Cone Penetrometer
Modified Dames & Moore Ring Sampler	Water levels indicated on the soil boring logs are the levels measured in the borehole at the times indicated. Groundwater level variations will occur over time. In low permeability soils, accurate determination of groundwater levels is not possible with short term water level observations.	UC Unconfined Compressive Strength
Dual Sampler SPT		(PID) Photo-Ionization Detector
Grab Sample		(OVA) Organic Vapor Analyzer
GeoProbe Macro Core or Large Bore		
No Recovery		
Ring Sampler		
Shelby Tube		
Standard Penetration Test		
Split Spoon		
Texas Cone Penetrometer		
Vane Shear		

Descriptive Soil Classification

Soil classification as noted on the soil boring logs is based Unified Soil Classification System. Where sufficient laboratory data exist to classify the soils consistent with ASTM D2487 "Classification of Soils for Engineering Purposes" this procedure is used. ASTM D2488 "Description and Identification of Soils (Visual-Manual Procedure)" is also used to classify the soils, particularly where insufficient laboratory data exist to classify the soils in accordance with ASTM D2487. In addition to USCS classification, coarse grained soils are classified on the basis of their in-place relative density, and fine-grained soils are classified on the basis of their consistency. See "Strength Terms" table below for details. The ASTM standards noted above are for reference to methodology in general. In some cases, variations to methods are applied as a result of local practice or professional judgment.

Location And Elevation Notes

Exploration point locations as shown on the Exploration Plan and as noted on the soil boring logs in the form of Latitude and Longitude are approximate. See Exploration and Testing Procedures in the report for the methods used to locate the exploration points for this project. Surface elevation data annotated with +/- indicates that no actual topographical survey was conducted to confirm the surface elevation. Instead, the surface elevation was approximately determined from topographic maps of the area.

Strength Terms

Relative Density of Coarse-Grained Soils
(More than 50% retained on No. 200 sieve.)
Density determined by Standard Penetration Resistance

Relative Density	Standard Penetration or N-Value (Blows/Ft.)
Very Loose	0 - 3
Loose	4 - 9
Medium Dense	10 - 29
Dense	30 - 50
Very Dense	> 50

Consistency of Fine-Grained Soils
(50% or more passing the No. 200 sieve.)
Consistency determined by laboratory shear strength testing, field visual-manual procedures or standard penetration resistance

Consistency	Unconfined Compressive Strength Qu (tsf)	Standard Penetration or N-Value (Blows/Ft.)
Very Soft	less than 0.25	0 - 1
Soft	0.25 to 0.50	2 - 4
Medium Stiff	0.50 to 1.00	5 - 8
Stiff	1.00 to 2.00	9 - 15
Very Stiff	2.00 to 4.00	16 - 30
Hard	> 4.00	> 30

Relevance of Exploration and Laboratory Test Results

Exploration/field results and/or laboratory test data contained within this document are intended for application to the project as described in this document. Use of such exploration/field results and/or laboratory test data should not be used independently of this document.

DRAFT

Unified Soil Classification System

Criteria for Assigning Group Symbols and Group Names Using Laboratory Tests [A]				Soil Classification	
				Group Symbol	Group Name [B]
Coarse-Grained Soils: More than 50% retained on No. 200 sieve	**Gravels:** More than 50% of coarse fraction retained on No. 4 sieve	**Clean Gravels:** Less than 5% fines [C]	Cu≥4 and 1≤Cc≤3 [E]	GW	Well-graded gravel [F]
			Cu<4 and/or [Cc<1 or Cc>3.0] [E]	GP	Poorly graded gravel [F]
		Gravels with Fines: More than 12% fines [C]	Fines classify as ML or MH	GM	Silty gravel [F, G, H]
			Fines classify as CL or CH	GC	Clayey gravel [F, G, H]
	Sands: 50% or more of coarse fraction passes No. 4 sieve	**Clean Sands:** Less than 5% fines [D]	Cu≥6 and 1≤Cc≤3 [E]	SW	Well-graded sand [I]
			Cu<6 and/or [Cc<1 or Cc>3.0] [E]	SP	Poorly graded sand [I]
		Sands with Fines: More than 12% fines [D]	Fines classify as ML or MH	SM	Silty sand [G, H, I]
			Fines classify as CL or CH	SC	Clayey sand [G, H, I]
Fine-Grained Soils: 50% or more passes the No. 200 sieve	**Silts and Clays:** Liquid limit less than 50	**Inorganic:**	PI > 7 and plots above "A" line [J]	CL	Lean clay [K, L, M]
			PI < 4 or plots below "A" line [J]	ML	Silt [K, L, M]
		Organic:	$\frac{LL\ oven\ dried}{LL\ not\ dried} < 0.75$	OL	Organic clay [K, L, M, N]
					Organic silt [K, L, M, O]
	Silts and Clays: Liquid limit 50 or more	**Inorganic:**	PI plots on or above "A" line	CH	Fat clay [K, L, M]
			PI plots below "A" line	MH	Elastic silt [K, L, M]
		Organic:	$\frac{LL\ oven\ dried}{LL\ not\ dried} < 0.75$	OH	Organic clay [K, L, M, P]
					Organic silt [K, L, M, Q]
Highly organic soils:	Primarily organic matter, dark in color, and organic odor			PT	Peat

[A] Based on the material passing the 3-inch (75-mm) sieve.
[B] If field sample contained cobbles or boulders, or both, add "with cobbles or boulders, or both" to group name.
[C] Gravels with 5 to 12% fines require dual symbols: GW-GM well-graded gravel with silt, GW-GC well-graded gravel with clay, GP-GM poorly graded gravel with silt, GP-GC poorly graded gravel with clay.
[D] Sands with 5 to 12% fines require dual symbols: SW-SM well-graded sand with silt, SW-SC well-graded sand with clay, SP-SM poorly graded sand with silt, SP-SC poorly graded sand with clay.
[E] $Cu = D_{60}/D_{10}$ $Cc = \frac{(D_{30})^2}{D_{10} \times D_{60}}$
[F] If soil contains ≥ 15% sand, add "with sand" to group name.
[G] If fines classify as CL-ML, use dual symbol GC-GM, or SC-SM.
[H] If fines are organic, add "with organic fines" to group name.
[I] If soil contains ≥ 15% gravel, add "with gravel" to group name.
[J] If Atterberg limits plot in shaded area, soil is a CL-ML, silty clay.
[K] If soil contains 15 to 29% plus No. 200, add "with sand" or "with gravel," whichever is predominant.
[L] If soil contains ≥ 30% plus No. 200 predominantly sand, add "sandy" to group name.
[M] If soil contains ≥ 30% plus No. 200, predominantly gravel, add "gravelly" to group name.
[N] PI ≥ 4 and plots on or above "A" line.
[O] PI < 4 or plots below "A" line.
[P] PI plots on or above "A" line.
[Q] PI plots below "A" line.

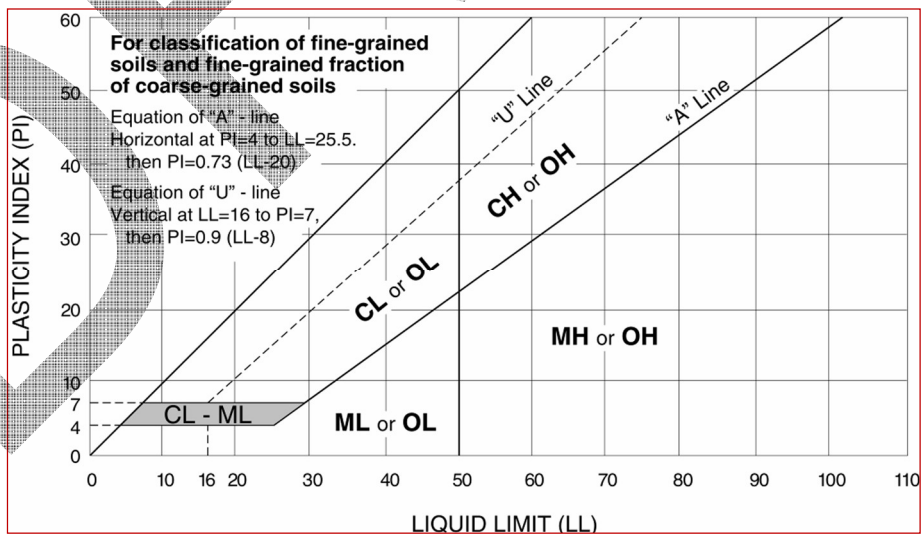

DRAFT

EXHIBIT A

DRAFT

Chapter 16.15

CRITICAL AREAS

Sections:

16.15.010 Purpose and intent.
16.15.020 Applicability.
16.15.030 Designation, classification, and delineation of critical areas.
16.15.040 Critical area buffers and setbacks.
16.15.050 Decision authority.
16.15.060 Conflicts.
16.15.070 Relationship to other codes and regulations.
16.15.080 Lands to which this chapter applies and maps.
16.15.090 Regulated activities.
16.15.100 Exempt activities.
16.15.105 Nonconformances
16.15.110 Emergencies.
16.15.115 Trees and vegetation – Activities and standards.
16.15.120 Critical area review – Process and procedures.
16.15.130 Applications.
16.15.140 Notice of application.
16.15.150 Preapplication meeting.
16.15.160 Critical area review – Preliminary assessment.
16.15.200 Critical area reports.
16.15.210 Mitigation sequencing and location.
16.15.220 Mitigation plan – Requirements.
16.15.230 Mitigation plans – Performance standards.
16.15.240 Maintenance and monitoring plan.
16.15.250 Notice on title.
16.15.260 Signs and fencing.
16.15.270 Protective covenants.
16.15.310 Alteration of critical areas.
16.15.320 Unauthorized alterations of critical areas.
16.15.330 Restoration plan.
16.15.340 Guarantees to ensure mitigation, maintenance, and monitoring.
16.15.350 Variances.
16.15.360 Reasonable use exceptions.
16.15.380 Enforcement and penalties.
16.15.385 Appeals of critical area decisions.
16.15.390 Fees.
16.15.400 Wetlands.
16.15.420 Fish and Wildlife Habitat Conservation Areas.
16.15.430 Geologically hazardous area.
16.15.440 Frequently Flooded areas.
16.15.450 Critical aquifer recharge areas.
16.15.500 Definitions.

16.15.010 Purpose and intent.

A. Purpose. The purpose of this chapter is to designate and classify ecologically sensitive and hazardous areas, and to protect these areas and their functions and values, while also allowing for reasonable use of private property. Ecologically sensitive and hazardous areas, or critical areas, include wetlands, fish and wildlife habitat conservation areas, geologically hazardous areas, frequently flooded areas including streams, and critical aquifer recharge areas. This chapter includes the following objectives:

1. Comply with the requirements of the Growth Management Act (Chapter 36.70A RCW) and implement rules to identify and protect critical areas consistent with best available science per WAC 365-195-900 through 365-195-925, as amended, and in consultation with state and federal agencies and other qualified professionals;

2. Implement the goals and policies of the Mountlake Terrace Comprehensive Plan and development codes, including those pertaining to natural features and environmental protection, and relating to land use, housing, economic development, transportation, and adequate public facilities;

3. Use best available science to prepare critical area reports and make decisions to protect the functions and values of critical areas with special consideration given to conservation or protection measures necessary to preserve or enhance anadromous fish and their habitat, consistent with RCW 36.70A.172 and WAC 365-195-900 through 365-195-925;

4. Serve as a basis for exercise of the City's substantive authority under the State Environmental Policy Act (Chapter 43.21C RCW) where appropriate, to identify, consider, and mitigate significant adverse effects on critical areas not otherwise addressed by this chapter, while also reducing the City's reliance on project-level SEPA review to protect regulated critical areas; and

5. Provide consistent standards, criteria, and procedures that will enable the City to effectively manage and protect critical areas while accommodating the rights of property owners to use their property in a reasonable manner.

B. Intent. The intent of critical areas regulations, as set forth in this chapter, is to:

1. Develop and implement a comprehensive, balanced and fair regulatory program that avoids impacts to critical resources where possible, by limiting development and alterations, that requires that mitigation be performed by those affecting critical areas, and that thereby protects the public from injury, loss of life, property or financial losses due to flooding, erosion, landslide, seismic events, soil subsidence or steep slope failure;

2. Provide greater certainty to property owners regarding uses and activities that are permitted, prohibited and/or regulated due to the presence of critical areas;

3. Coordinate environmental review and permitting of proposals involving critical areas with existing development review and approval processes to avoid duplication and delay, pursuant to Chapter 36.70B RCW;

4. Establish conservation and protection measures for threatened and endangered fish species in compliance with the requirements of the Endangered Species Act and WAC 365-195-925;

5. Achieve no net loss of critical area functions and values. Uses and activities carried out, pursuant to this chapter, shall result in equivalent or, if the applicant chooses, greater critical area functions and values. No activity or use shall be allowed that results in a net loss of the functions or values of critical areas;

6. Alert the public to the development limitations and hazards associated with critical areas and their required buffers; and

7. Recognize that the objectives and means of protecting critical areas is unique for each community. (Ord. 2731 § 2 (Exh. A), 2018).

DRAFT

16.15.020 Applicability.

A. This chapter shall regulate all land, water areas and structures, and any use or activity that affects or potentially affects a critical area or critical area buffer, unless otherwise exempt or granted an exception, consistent with this chapter.

B. All areas within the city meeting the definition of one or more critical areas, pursuant to MTMC 16.15.500, regardless of any formal identification of location of critical areas, pursuant to MTMC 16.15.080, are hereby designated critical areas and are subject to the provisions of this chapter.

C. The use of the term "critical area" in this chapter shall generally mean to include the critical area buffer, unless the context clearly indicates otherwise.

D. Critical areas regulated by this chapter include:

1. Wetlands , pursuant to MTMC 16.15.400;

2. Fish and wildlife habitat conservation areas, pursuant to MTMC 16.15.420;

3. Geologically hazardous areas, pursuant to MTMC 16.15.430;

4. Frequently flooded areas, pursuant to MTMC 16.15.440; and

5. Critical aquifer recharge areas, pursuant to MTMC 16.15.450.

E. Areas adjacent to critical areas are subject to this chapter. An adjacent area is any of the following locations:

1. A distance equal to, or less than, the required critical area buffer width and any building setback;

2. On a portion of a site with a critical area when the critical area's buffer overlaps the subject site;

3. A distance equal to, or less than, 300 feet upland from a stream, wetland, or water body, within a channel migration zone or ordinary high water mark that is not otherwise regulated by Chapter 16.10 MTMC, Shoreline Management;

4. Within 100 feet of a priority habitat area;

5. Within a floodway or floodplain; and

6. A distance equal to, or less than, 330 feet from a priority habitat point as mapped by the Washington State Department of Fish and Wildlife; or, within 50 feet of a critical slope.

7. A distance equal to or less than two hundred (200) feet from a critical aquifer recharge area.

F. The functions and values of critical areas shall be protected, pursuant to this chapter. No activity or use shall be allowed that results in a net loss of the functions or values of the critical areas. Any action taken shall result in equivalent or greater functions and values of the critical areas associated with the proposed action.

G. A "critical area permit" means any authorization to proceed with an activity, action, or use in a critical area or buffer. An authorization may consist of an approved land use, building, or other type of construction permit.

H. A permit or approval shall be obtained from the City for any activity which alters or disturbs critical areas or buffers, including but not limited to clearing, grading, draining, filling, dumping of debris, demolition of structures and installation of utilities, unless otherwise exempt or granted an exception, consistent with this chapter.

I. Approval of a permit or development proposal, pursuant to the provisions of this chapter, does not release the applicant from responsibility to comply with the provisions of this chapter. Activities in critical areas or buffers deemed exempt from a permit are responsible to comply with the provisions of this chapter. (Ord. 2731 § 2 (Exh. A), 2018).

DRAFT

16.15.030 Designation, classification, and delineation of critical areas.
Critical areas within the City of Mountlake Terrace shall be designated, classified, and delineated, pursuant to MTMC 16.15.500, and the respective critical area type in MTMC 16.15.400 through 16.15.450. (Ord. 2731 § 2 (Exh. A), 2018).

16.15.040 Critical area buffers and setbacks.
A. The purpose of a buffer is to protect the integrity, function and value of the subject critical area (such as wetlands, streams, and wildlife habitat areas), and/or to protect life, property and resources from risks associated with development on unstable or critical lands (such as geologic hazard areas, flood hazard areas, critical aquifer recharge areas).

B. Required buffer widths shall reflect the sensitivity of the particular critical area or the risks associated with development. Specific regulations for individual critical area buffer widths and setbacks apply, pursuant to MTMC 16.15.400 through 16.15.450.

C. Buildings should be set back from the edge of a critical area buffer as required by this Chapter.

D. If two contiguous critical areas overlap, the more restrictive, wider buffer applies.

E. Restrictive covenants or conservation easements may be required to provide long-term preservation and protection of buffers and setback areas. (Ord. 2731 § 2 (Exh. A), 2018).

16.15.050 Decision authority.
A. The Director has the authority to administer, interpret, and apply the provisions of this chapter, and is responsible to enforce this chapter to accomplish the intent and purpose.

B. When interpreting and applying the regulations of this chapter, the Director shall consider the chapter's provisions to be the minimum requirements and liberally construed to serve the purpose of this chapter.

C. The Director has the authority to require additional information, to determine the level of detail and appropriate methodologies for critical area reports and studies, and to prepare application and informational materials, as required and necessary.

D. The Director has the authority to approve, withhold, condition, or deny development permit or activity approvals to ensure that the proposal is consistent with this chapter.

E. The Director may permit, or condition, uses not specifically mentioned in this chapter, when it can reasonably be determined that the use is sufficiently consistent with other uses permitted in the critical area. The Director shall issue a written decision stating the reasons for determining which existing review and approval process is applicable to the proposal based on its similarity to and compatibility with other allowed uses in a critical area.

F. Decisions by the Director are final unless appealed, pursuant to MTMC 16.15.385, Appeals of critical area decisions.

G. The Hearing Examiner shall have decision authority over those applications the Hearing Examiner reviews and issues decisions on, consistent with this chapter and Chapter 2.120 MTMC. (Ord. 2731 § 2 (Exh. A), 2018).

16.15.060 Conflicts.
A. In the event of a conflict between this chapter and any other City regulations, the more restrictive regulations shall apply, except when otherwise required by federal or state law, or regulated by Chapter 16.10 MTMC, Shoreline Management.

B. In the event any easement, covenant, or deed restriction conflicts with this chapter, that which provides greater protection to the critical areas shall apply first. (Ord. 2731 § 2 (Exh. A), 2018).

16.15.070 Relationship to other codes and regulations.
A. These critical area regulations shall apply as an overlay and are in addition to any other permits or approvals required by the City's land use and other regulations established by the City of Mountlake Terrace.

DRAFT

B. When an area contains overlapping critical areas, the more restrictive provisions of the underlying critical areas prevail.

C. The regulations of this chapter shall apply concurrently, when applicable, with review conducted under the State Environmental Policy Act (SEPA), per Chapter 16.05 MTMC.

D. Critical areas within the shoreline jurisdiction shall be regulated by Chapter 16.10 MTMC, Shoreline Management, as applicable. (Ord. 2731 § 2 (Exh. A), 2018).

16.15.080 Lands to which this chapter applies and maps.

A. The generalized location and extent of critical areas within the City of Mountlake Terrace is shown on City critical areas maps including, but not limited to, maps identified in the Comprehensive Plan, as amended. These maps are only a reference guide and cannot be relied upon to determine the presence or absence of critical areas or buffers or provide a final designation. The maps may be amended and updated as critical areas are identified, classified, or other information obtained.

B. Land may be considered a critical areas based on one, or more, of the following:

1. Location is shown on a critical area map, or is within 200 feet thereof;

2. Information in public records indicating possible presence of critical areas;

3. Field observation of presence of standing or moving water, significant vegetation, wildlife, or slopes;

4. Conflict between mapped information and observed site conditions; or

5. Apparent presence of critical area on abutting property whose critical area type buffer overlaps the subject site.

C. Shoreline Jurisdiction Map. Any critical areas shown within the adopted Shoreline Jurisdiction Area Map, shall be regulated per Chapter 16.10 MTMC, as amended, and are not subject to the provisions of this chapter. (Ord. 2731 § 2 (Exh. A), 2018).

16.15.090 Regulated activities.

The provisions of this chapter shall apply to the following activities unless exempt, pursuant to MTMC 16.15.100, Exempt activities, or otherwise allowed, pursuant to MTMC 16.15.110. A critical area report may be required to support the requested activity. Activities include, but are not limited to:

A. Removing, excavating, disturbing or dredging soil, sand, gravel, minerals, organic matter or materials of any kind;

B. Dumping, discharging, or filling with any material;

C. Draining, flooding or disturbing the water level or water table, or diverting or impeding water flow;

D. Driving pilings or placing obstructions;

E. Constructing, reconstructing, demolishing or altering the size of any structure or infrastructure;

F. Destroying or altering vegetation through clearing, grading, harvesting, shading, or planting vegetation that would alter the character of a critical area;

G. Activities that result in significant changes in water temperature, physical or chemical characteristics of water sources, including quantity and pollutants;

H. No new critical facilities shall be constructed in any critical area and critical area buffer, unless otherwise provided for by this chapter. Existing critical facilities shall not be altered except in conformance with the provision of the chapter and consistency with current building and fire code standards per city code;

DRAFT

I. Critical area mitigation sites; and

J. Any other activity potentially affecting a critical area or buffer not otherwise allowed or exempt from the provisions of this chapter, as determined by the Director, in writing, per MTMC 16.15.160(D). (Ord. 2731 § 2 (Exh. A), 2018).

16.15.100 Exempt activities.

A. Exempt activities per subsection B of this section are subject to compliance with the following:

1. Compliance with critical area standards of this chapter, and any other applicable local, state, or federal regulations.

2. The activity results in the least amount of impact to the critical areas and is conducted using the best management practices, as defined by this chapter.

3. The use or activity may not result in a loss to the functions and values of the subject critical areas.

4. Any incidental damage to, or alteration of, a critical area that is not a necessary outcome of the exempted activity shall be restored, rehabilitated, or replaced at the responsible party's expense.

5. The proponent obtains any other approvals or permits required by the City or other agencies with jurisdiction.

6. Other uses or activities, not identified in this section, may be permitted or restricted in a critical area as described in the applicable critical area section of this chapter and its provisions.

B. Exempt Activities. The following activities are exempt from critical area review or critical area permit under this chapter unless otherwise stated, provided they are consistent with subsection A of this section:

1. Development vested prior to the effective date of the ordinance codified in this chapter pursuant to MTMC 16.15.105.

2. Activities covered by prior review and approval. Activities that are consistent with a previously completed critical area review are not required to complete a new review. For example, if a critical area review occurred as part of a development proposal (such as site development, subdivision, or conditional use permit), construction permits related to the approved development should not need to be readdressed as long as the construction is consistent with the original approval. Such activities are exempt from this chapter, when:

a. There have been no material changes in the potential impact to the critical areas or buffers since the prior review;

b. There is no new information available that is applicable to any critical area review of the site or particular critical area;

c. The original permit or approval has not expired or, if no expiration date, no more than five years has elapsed since the issuance of that permit or approval;

d. The prior permit or approval, including any conditions, has been complied with; and

e. When applicable, a notice on title is recorded, pursuant to MTMC 16.15.250, and a copy provided to the City prior to any further activities commencing.

3. Activities involving artificially created wetlands or streams intentionally created from non-wetland sites including, but not limited to, grass-lined swales, irrigation and drainage ditches, retention or detention facilities, and landscape features, except wetlands or streams intentionally created to mitigate conversion of wetlands or that provide habitat for anadromous fish.

4. Previously legally filled wetlands.

DRAFT

5. Development proposals within physically separated and functionally isolated wetland or stream buffers. Functionally disconnected buffers occur when legally established development blocks the protective measures or any ecological functions and values that a buffer provides and increasing the buffer on the far side of the development would add no protective benefit. Functionally disconnected buffers may be appropriate to exclude from regulated buffers. Functionally disconnected buffers may be created by:

a. Significant developments

b. Public infrastructure such as paved roads and railroads

c. Private developments such as houses or commercial structures

The following typically do not create functionally disconnected buffers:

a. Trails

b. Minor accessory structures

c. Paths

d. Driveways serving a single unit residence

The Director may, based on a site investigation and other available sources, determine to require an assessment and functional analysis report by a qualified professional that demonstrates the interrupted buffer area is functionally and/or hydrologically isolated from the critical area.

6. Minor Site Investigative Work. Site investigative work and studies that are prerequisite to preparing an application for development including soils tests, water quality studies, wildlife studies and similar tests and investigations; and where such activities do not require grading, construction of access, or significant amounts of excavation. In every case, impacts to the critical area shall be minimized and disturbed areas shall be immediately restored consistent with this chapter.

7. Operation, Maintenance, or Repair.

a. Normal and routine operation, maintenance, or repair of existing structures, infrastructure improvements, utilities and associated structures, public or private roads, or drainage systems, that do not require construction permits; provided, that the activity does not further alter or increase the impact to, or encroach further within, the critical area or buffer, does not increase the impervious area, and there is no increased risk to life or property as a result of the proposed operation, maintenance, or repair.

b. Normal maintenance and repair of residential or commercial structures, facilities and landscaping; provided, that reconstruction of any structures may not increase the impervious floor area, and that the provisions of this chapter and MTMC 19.120.250 are followed.

8. Demolition. Demolition of structures located within critical areas or their buffers that are 200 square feet or less in size, subject to an approved erosion control plan and permit consistent with the City stormwater manual and clearing limits that will adequately protect the critical area, and no use of heavy equipment. Structures in excess of 200 square feet, or demolition of structures necessary to support or stabilize landslide hazard areas, or other sensitive use, are not exempt from critical area review per MTMC 16.15.120.

9. Modification to Existing Structures. Structural modification of, addition to, or replacement of an existing, legally constructed structure within critical areas or buffers shall be allowed, when the modification:

a. Does not increase the footprint or square footage of the structure; except that square footage may be added to the structure consistent with the dimensional requirements of the underlying district; provided, that on-site critical areas and/or buffers are mitigated per this chapter, at the discretion of the Director;

DRAFT

b. Does not alter or increase the impact to the critical area or buffer except to a more conforming status per this chapter;

c. Does not increase risk to life or property as a result of the proposed modification or replacement; and that

d. Application for restoration of structures substantially damaged by fire, flood, or act of nature must be initiated consistent with the nonconformance provisions per MTMC 19.120.250, as evidenced by the application for a valid building permit within 12 months of the damage, and diligently pursued to completion.

10. Passive Outdoor Activities. Recreation, education, and scientific research activities that do not degrade the critical area including but not limited to interpretive field trips, fishing, hiking, and bird watching. Walkways and trails, subject to subsections (B)(12) and (13) of this section, are limited to minor crossings of streams and wetlands having no adverse impact on water quality. They should be generally parallel to the perimeter of the wetland, located only in the outer 25 percent of the wetland buffer area, and located to avoid removal of significant trees. They should be limited to pervious surfaces no more than five feet in width for pedestrian use only.

Raised boardwalks and wildlife viewing structures utilizing materials acceptable for the proposed location may be acceptable, consistent with any other permitting requirements per this chapter or City Code.

11. Recreation Areas – Operation, Maintenance, Repair, or Replacement.

a. Maintenance, operation, repair, modification, or replacement of existing publicly improved recreation areas as long as any such activity does not involve the expansion of facilities and existing improvements into a previously unimproved portion of critical areas or required buffers.

b. When such activities occur within designated fish and wildlife habitat conservation areas they shall be performed consistent with the development standards of this chapter, best available science, or adaptive management plans as recognized by the City. Retention and replanting of native vegetation shall occur wherever possible in areas of land disturbance.

12. Existing Public and Private Pedestrian Trails. Normal maintenance, repair, and reconstruction of existing public and private pedestrian trails; provided, that the activity does not further alter or increase the impact to, or encroach further within, the critical area or buffer, and does not increase the impervious area.

13. New Public and Private Pedestrian Trails. New public and private pedestrian trails, subject to the following:

a. Walkways and trails are limited to minor crossings of streams and wetlands having no adverse impact on water quality. They should generally parallel the perimeter of the wetland, located only in the outer 25 percent of the wetland buffer area, and located to avoid removal of significant trees. The trail surface should be pervious surfaces and meet water quality standards set forth in the City's current stormwater management regulations. Limited exceptions are permitted to allow impervious surfaces to provide accessibility. Trails are limited to pedestrian use and should be no more than five feet in width, unless the Director determines the public benefit derived from a wider trail together with compensatory mitigation is equal to or better than what would otherwise have been achieved. Raised walkways and wildlife and viewing structures utilizing approved support structures are acceptable. Removal of significant trees shall be avoided. The critical area and/or buffers abutting the trail shall be replanted or restored where feasible, equal to the width of the trail corridor, including disturbed areas.

b. Where legally established development has reduced the width of the buffer, trails may be placed in the outer 25 percent portion of the remaining critical area buffer. Public use trails may be placed within critical areas and buffers when providing public access to water-dependent activities, consistent with an adopted master plan.

DRAFT

c. Trails to be located in a geologic (landslide or erosion) hazard area shall be constructed in a manner that does not increase the risk of landslide or erosion and in accordance with an approved geotechnical report.

d. Trails in the shoreline jurisdiction are regulated by Chapter 16.10 MTMC.

14. Minor Conservation and Enhancement. Conservation and restoration activities that clearly demonstrate net ecological gain are exempt from the provisions of this chapter, provided the conservation and restoration activities are not actions taken for mitigation purposes.

15. Trees and Vegetation Maintenance.

a. Normal maintenance of vegetation and trees, performed in accordance with best management practices; provided, that such management actions are part of a regular and ongoing maintenance program, do not expand further into the critical area, are not the result of an expansion of a structure or utility, and do not directly impact an endangered or threatened species.

b. No vegetation or trees shall be altered or removed from a critical area or its buffer without prior approval from the Director, pursuant to MTMC 16.15.115, except in an emergency, pursuant to MTMC 16.15.110.

c. Removal of noxious weeds or invasive vegetation is allowed given requirements per MTMC 16.15.115(A) are met, including but not limited to the revegetation the area of removal with site-appropriate native species.

16. Active or Imminent Hazard Trees. Active or imminent hazard trees, and trees deemed an emergency pursuant to MTMC 16.15.110, may be converted to a snag or removed subject to the following:

a. The tree is consistent with the definition of a hazard tree.

b. Creating a snag is prioritized over complete tree removal. If creating a snag is not sufficient to address the hazard, tree may be removed. Removal does not include the removal of the cut tree materials themselves, unless otherwise permitted by a qualified arborist or the Director.

c. Tree work to address the hazard avoids and minimizes damage to remaining trees and vegetation in the area.

d. The City and/or utility provider is removing the trees and/or ground cover in situations involving immediate danger to life or property, substantial fire hazards, or interruption of services provided by a utility.

e. The Director shall be provided with documents from a qualified arborist that substantiate the hazardous nature of the removed trees. The City retains the right to require compliance with any applicable requirements per MTMC 16.15.115, and additional mitigation per MTMC 16.15.220. The City may also require a clearing and grading permit.

f. Removal of non-imminent hazard trees is regulated pursuant to MTMC 16.15.115.

17. Activities within the Improved Right-of-Way. Replacement, modification, installation, or construction of utility facilities, lines, pipes, mains, equipment, or appurtenances, not including substations, when such facilities are located within the improved portion of the public right-of-way or City-authorized private roadway except those activities that alter a wetland or watercourse, such as culverts or bridges, or result in the transport of sediment or increased stormwater. If right-of-way activities impact wetlands or watercourses—whether directly through alteration of indirectly through transportation-related effects or increased stormwater runoff the following is required:

a. buffer widths shall be increased equivalent to the width of the right-of-way improvement, including all disturbed areas

DRAFT

b. Native vegetation within and adjacent to the right-of-way shall be retained where possible, and disturbed areas shall be replanted with appropriate native species to restore ecological function.

18. Minor Utility Projects. Utility projects which have minor or short-duration impacts to critical areas, in accordance with the criteria below and other applicable permits; provided, that the activity:

a. Involves the placement of a utility pole, street signs, anchor, or vault or other small component of a utility facility;

b. Disturbs an area of land no more than 75 square feet in size at any one location;

c. Does not significantly impact the function or values of a critical area(s);

d. There is no practical alternative with less impact on critical areas;

e. Shall not result in the transport of sediment or increased stormwater;

f. Is constructed with best management practices;

g. Any areas disturbed shall be replanted and restored consistent with underlying critical area type;

h. Public works projects that involve the provision or transmission of a utility, and public works projects that are consistent with the City's transportation plan, where no alternative routing options are reasonable.

19. Chemical Applications. The application of herbicides, pesticides, organic or mineral-derived fertilizers, or other hazardous substances, if necessary, as approved by the City; provided, that their use shall be restricted in accordance with Washington State Department of Fish and Wildlife Management and Department of Ecology recommendations, the regulations of the State Department of Agriculture, and the U.S. Environmental Protection Agency.

20. Navigational Aids and Boundary Markers. Construction or modification of navigational aids and boundary markers, not permanently anchored.

21. Minor activities not mentioned above and determined by the Director to have minimal impacts to a critical area, pursuant to MTMC 16.15.160(D). (Ord. 2747 § 3, 2019; Ord. 2731 § 2 (Exh. A), 2018).

16.15.105 Nonconformances.

A. Any legal use or legal structure in existence on the effective date of the ordinance codified in this chapter that does not meet the buffer requirements or building setbacks of this chapter for any designated critical area shall be considered a legal nonconforming use or structure.

B. Any legal use or structure for which an application has vested or for which a permit has been obtained prior to the effective date of the ordinance codified in this chapter, that does not meet the buffer requirements or building setback of this chapter for any designated critical area, shall be considered a legal nonconforming use or structure.

C. A legal nonconforming use or structure may be maintained or repaired provided the work does not increase the previously approved structure footprint or impervious area. A legal nonconforming use or structure shall not be, enlarged or extended in any manner that would further encroach into the critical area, buffer, or building setback. Additions and expansions above the ground floor may be utilized an unlimited number of times within zoning requirements.

D. A legal nonconforming use or structure that has been damaged or destroyed by fire or other calamity may be restored and its immediately previous use may be resumed unless the use of structure has been abandoned, discontinued, or terminated for a continuous period of six months shall not be resumed, rebuilt, reoccupied, except in conformance with the regulations in this chapter and Title 19. Legal nonconforming uses or structures

DRAFT

resumed shall not increase the nonconformity. Any restored structures shall be elevated one foot above base flood elevation, flood-proofed, or relocated landward where applicable and practicable.

E. Legally established lawns may be mowed and maintained, but not expanded in the buffer and/or critical area.

F. Non-native vegetation may be maintained, but not expanded in the buffer and/or critical area.

16.15.110 Emergencies.

A. Emergency actions are those activities necessary to prevent an immediate threat to public health, safety, or welfare, or that pose an immediate risk of damage to private property and that require remedial or preventative action in a time frame too short to allow for compliance with the standard procedural requirements of this chapter.

B. Emergencies which occur in critical areas and buffers are exempt from the provisions of the critical area regulations on a temporary basis and are subsequently subject to the provisions of this section and applicable provisions of this chapter.

C. Emergency actions that create an impact to a critical area or its buffer shall use reasonable methods to address the emergency; in addition, they must have the least possible impact to the critical area or its buffer.

D. Notice of Emergency. Within 30 working days of commencing the emergency activity, the person or agency taking such action shall notify the Director in writing and include the following. Providing notification does not waive the need to comply with any and all other applicable local, state, or federal requirements.

1. The location and nature of the emergency.

2. Photographic proof or other evidence to document the hazardous nature of the emergency.

3. A description of the actions taken to date.

4. A description of further actions expected to be taken including restoration or mitigation.

5. The anticipated time frame for completing abatement and restoration actions.

6. Contact information (name, address, phone, and email and after-hours contact).

7. Any other useful and pertinent information related to the cause of the emergency and reason to take emergency action.

E. Determination of Emergency – Process and Decision.

1. Within 14 days of notice of the emergency, the Director shall review the submitted notification per subsection D of this section, and determine if the action taken was within the scope of an emergency action per subsection A of this section, and as defined in MTMC 16.15.500.

2. If the Director determines the action was within the scope of an emergency, the person or agency shall proceed with the applicable procedural and mitigation requirements of this chapter.

3. If the Director determines that the action or any part of the action taken was beyond the scope of an allowed emergency action, then the provisions of MTMC 16.15.320, Unauthorized alterations of critical areas, may apply.

4. The Director may initiate the enforcement and penalty provisions of this chapter, MTMC 16.15.380, when the Director has reason to believe a violation has occurred.

5. Emergency determinations involving potentially impacting salmon habitat shall include consultation with Washington Department of Fish and Wildlife and affected Tribes.

DRAFT

F. Restoration and/or mitigation activities must be initiated within one year of the date of the emergency and completed in a timely manner, unless otherwise approved. (Ord. 2731 § 2 (Exh. A), 2018).

16.15.115 Trees and vegetation – Activities and standards.

Activities that improve critical area functions and values are permitted. This includes minor conservation and enhancement of critical areas that clearly demonstrate a net ecological gain, subject to the applicable regulations. Nonexempt and unauthorized alterations of trees are subject to MTMC 16.15.350 and 16.15.380.

A. Removal of Noxious Weeds or Invasive Vegetation.

1. The purpose is to encourage the removal of noxious, nonnative, and invasive species of vegetation and trees within critical areas and their buffers to improve, preserve, and protect the health of the vegetation and trees, and promote increased diversity of native vegetation and trees.

2. No permit or prior approval is required to conduct the activities as described in this section, except as otherwise stated.

3. Noxious weeds or invasive vegetation may be removed from critical areas in unlimited quantities (such as English ivy (Hedera helix); Himalayan blackberry (Rubus discolor, R. procerus); and evergreen blackberry (Rubus laciniatus), provided:

a. All work is performed above the ordinary high water mark and above the top of a stream bank, and is prohibited in very high risk landslide hazard areas unless otherwise approved;

b. Invasive and noxious weeds are on either the Snohomish County or Washington State Noxious Weed Control Board lists and removed in accordance with the control board guidelines and best management practices including handling and disposal methods appropriate to that species.

4. Removal shall be restricted to hand removal unless permits from the appropriate regulatory agencies have been obtained for approved biological or chemical treatments or mechanical methods.

5. Areas cleared by removal of noxious and/or invasive plant species must be revegetated with site-appropriate native species at natural densities and the site must be stabilized against erosion in accordance with the stormwater manual adopted by the City within 60 days of removal unless otherwise approved by the Director to coincide with the appropriate planting season.

6. Noxious weed removal is exempt from a permit subject to the following area limitations; otherwise a clearing and grading permit is required.

a. Within private property, up to 250 square feet of area may be cleared to bare soil, cumulative in any one calendar year, without a permit and critical area report prepared by a qualified professional.

b. On City-owned property or right-of-way, no more than 2,000 square feet of soil may be exposed at any one time.

B. Alteration and Removal Activities of Healthy Trees.

1. Removal or topping of a significant or nonsignificant healthy tree, as defined by this chapter, is not permitted in critical areas or buffers.

C. Hazard Trees.

1. Imminent hazard trees, as defined by this chapter, may be removed subject to emergency provisions of MTMC 16.15.110.

2. Minor pruning and crown thinning of non-imminent hazard trees is permitted to lessen or remove the hazard, such as wind damage to limbs or trunks. Where pruning or crown thinning is not sufficient to address the

DRAFT

hazard a tree evaluation report, subject to subsection E of this section is required. Converting hazard trees to wildlife snags shall be prioritized. When this still presents a hazard, trees may be removed entirely.

3. For hazardous circumstances that are not active or imminent, such as suspected tree rot or diseased trees or less obvious structural wind damage to limbs or trunks, the property owner shall submit a critical area preliminary assessment application and tree evaluation report, per subsection E of this section.

4. Mitigation for removed trees shall be pursuant to subsection D of this section.

D. Mitigation.

1. The Director shall authorize only such alteration to existing trees and vegetation as may be necessary to eliminate the hazard and shall condition authorization on means and methods of removal necessary to minimize environmental impacts, including replacement of any significant trees.

2. All cut vegetation (tree stems, branches, etc.) shall be left within the critical areas or buffers unless removal is warranted due to the potential for disease or pest transmittal to other healthy vegetation per the recommendations of the qualified professional, and approval from the Director.

3. Removed trees shall be replaced within one year of removal. A replacement ratio of two trees replaced for every one tree removed that has a DBH of seven inches or less is required. A tree replacement ratio of four trees for every one tree removed that has a DBH of 8 inches or greater is required. Replacement trees may be planted at a different, nearby location on the same property if planting in the same location would create a new hazard or potentially damage the critical area, in accordance with an approved restoration plan. Replacement trees should be native and indigenous to the area. Tree size shall be a minimum of one inch in diameter at breast height (dbh) for deciduous trees and a minimum of six feet in height for evergreen trees as measured from the top of the root ball, unless otherwise approved or required. The Director may approve or require, or a qualified professional tree evaluation report may recommend, an increase or decrease in the replacement quantity and size to improve survival rates, achieve quick recovery or other benefit to the critical area or buffer. The final decision is at the discretion of the Director.

a..Fee-in-lieu for replacement trees is required if a qualified professional determines a 10:1 tree replacement ratio would be detrimental to survival rates, recovery, or the benefit of the critical area or buffer, as approved by the Director. The fee amount shall be multiplied by the number of trees necessary to satisfy the tree replacement requirement of 10:1. The fee shall be paid to the City prior to the issuance of a civil or building permit. Tree replacement fees rate: $781 per tree.

4. For a priority habitat tree, such as an eagle perch or occupied nest, a qualified professional shall be consulted, at the applicant's expense, to determine timing, methods of removal and mitigation of such tree.

E. Tree Evaluation Report. Approval to cut or clear trees, as proposed by the property owner, may only be given upon recommendation of the qualified professional that the condition constitutes an actual threat to life or property in homes, private yards, buildings, public or private streets and driveways, sidewalks, improved utility corridors, or access for emergency vehicles, or a pedestrian way, and approved by the Director for purposes of this section.

1. Tree Evaluation Report. A professional evaluation of trees and/or a tree protection plan, prepared by a qualified professional, may be required where the Director deems such services necessary to demonstrate the condition of a tree proposed for removal or significant alteration, or an activity that poses harm to a tree, such as filling or grading with more than six inches of highly humus-rich and permeable soil, whether or not the tree is hazardous.

2. Report Contents. The evaluation may include, but is not necessarily limited to:

a. A written description of the existing conditions on the property in proximity to the tree and at least 10 feet beyond the dripline of the tree.

b. An assessment of the condition of the tree, documenting the degree of hazard.

DRAFT

c. An evaluation of the anticipated effects of removal of the tree on the critical areas functions and values, including the impact on the viability of trees on and off site in proximity to the subject tree.

d. A plan for any required tree protection or replacement measures; and supervising and/or monitoring implementation of any required tree protection or replacement measure appropriate to the impact.

e. Include a post-construction site inspection and evaluation.

f. The qualified professional shall include an assessment of whether a portion of the tree is suitable for a snag for wildlife habitat and may safely be retained.

g. The report (or critical area preliminary assessment (CAPA) shall include a grant of permission for the Director and/or qualified professionals under contract with or employed by the City to enter the subject property to evaluate the circumstances.

h. The report is signed by the qualified professional.

3. The Director may determine the extent of tree removal or that there may be sufficient impact of the functions and value of the critical area that a critical area report is required, pursuant to MTMC 16.15.200. (Ord. 2731 § 2 (Exh. A), 2018).

16.15.120 Critical area review – Process and procedures.

When a proposed use, activity or action may impact a critical area the following procedure would generally be followed to evaluate whether and how the use or activity is regulated by this chapter. Additional procedural steps and filing requirements may apply.

A. The proponent of a development use or activity for a property meets formally or informally with the City, pursuant to MTMC 16.15.150.

B. Concurrent with or subsequent to A of this section, the applicant may submit an application for a critical area preliminary assessment (CAPA), pursuant to MTMC 16.15.160. The applicant may also elect to proceed directly to preparation of a critical area report(s), pursuant MTMC 16.15.200, and any other applicable critical area sections of this chapter.

C. The Director will evaluate the project area and vicinity of the proposal for critical areas and make an initial determination on presence of critical areas and the appropriate review and decision-making process for the proposed use or activity, pursuant to MTMC 16.15.160.

D. Critical Area Review.

1. The applicant prepares and submits any required applications, permits, reports, and any special studies. Critical area reports shall be prepared consistent with MTMC 16.15.200 and the additional reporting requirements for each critical area type, per MTMC 16.15.400 through 16.15.450, as applicable.

2. The City shall:

a. Make a determination of complete application and issue notice of application, pursuant to MTMC 16.15.140.

b. Evaluate the application materials and determine whether the proposal is likely to impact the functions or values of critical areas.

c. Determine if the proposed project adequately addresses the potential impacts to the critical area and whether they can be avoided, minimized or mitigated per the mitigation sequencing process.

d. Determine whether the proposal conforms to the requisite critical area requirements and standards of this chapter.

DRAFT

e. Confirm the mitigation sequencing and location preferences per MTMC 16.15.210 through 16.15.240 have been satisfied.

3. The Director shall issue a written decision, with or without conditions, consistent with the procedures, notification, criteria and applicable requirements and standards set forth in this chapter, or forward a recommendation to the Hearing Examiner when the Hearing Examiner is the decision authority.

4. The applicant may proceed with the proposed use, activity, or action consistent with the decision and all applications, standards and regulations, including MTMC 16.15.250, Notice on title.

5. Appeals of decisions can be made, pursuant to MTMC 16.15.385.

E. Review and Decision-Making Matrix.

Type of Review	Application Form	Process	Decision Criteria	Decision Maker	Decision Timeline[1]	Appeal	Public Notice	Notice on Title	Fee
Informal Meeting	N/A	Admin	N/A 16.15.150	N/A	N/A	N/A	N/A	N/A	No
Preapplication Conference	Preap CAPA (opt.)	Admin	16.15.150	Admin	Varies	N/A	N/A	N/A	Yes*
Critical Area Preliminary Assessment[2,3]	CAPA	Admin	16.15.160	Director	30 days	Director	N/A	Yes	No
Emergency, Determination of[4]	Letter	Admin	16.15.110	Director	14 days	Hearing Examiner	N/A	N/A	No
Critical Area Review and Approval	CAR	Admin	16.15.120	Director	Consistent with any underlying permit, unless otherwise approved (typically 120 days)	Hearing Examiner	Yes	Yes	Yes
Alteration, or Buffer Averaging	CAR	Admin	16.15.310; 16.15.400 – 16.15.450	Director		Hearing Examiner	Yes	Yes	Yes
Reasonable Use Exception	RUE	Public Hearing	16.15.360	Hearing Examiner		Superior Court	Yes	Yes	Yes
Variance	VAR	Public Hearing	16.15.350	Hearing Examiner		Superior Court	Yes	Yes	Yes

[1] From date of application or determination of completeness, whichever is later.

[2] Critical Area Preliminary Assessment: A process to allow a preliminary determination whether or not critical areas or buffers are present in the project area, whether the proposal would likely affect a critical area or buffers, and if additional review is required. This decision vests for five years but does not vest future permits or land use proposals or applications.

[3] Designation of Critical Area: A process that allows a property owner to have the limits of critical areas and/or buffers, on or near the site, defined to establish the buffers and identify the development impact on them and potential mitigation measures for a specific development. The property is posted with a notice of critical area designation application. A decision vests for five years for the development proposal.

[4] Emergency, Determination of: The person or agency who took an action affecting a critical areas as an emergency measure shall, within 30 working days of taking such emergency action, submit a written notice of emergency to the Director, pursuant to MTMC 16.15.110(D). Providing notification does not waive the need to comply with any and all applicable requirements.

* Except single-family homeowner.

(Ord. 2731 § 2 (Exh. A), 2018).

16.15.130 Applications.

A. All applications for permits or actions within the City's critical areas shall be submitted on forms provided by the Department. The permit application forms, copies of all current regulations, and submittal requirements that apply to the subject application shall be available from the Department. Application types include, but are not limited to, critical area preliminary assessment, reasonable use exception, variance, or alteration.

B. At a minimum, each application submittal shall include:

1. Completed application form(s) with the authorized signature of the applicant;

DRAFT

2. All requisite filing requirements including drawings, reports and studies, and any other materials, as appropriate and sufficient to review and process the application and render a decision consistent with the provisions of this chapter; and

3. Processing fee. (Ord. 2731 § 2 (Exh. A), 2018).

16.15.140 Notice of application.

A. No notice is required to review and make a critical area preliminary assessment.

B. Notification to the public of the presence or potential presence of critical areas shall occur per notice of development application consistent with MTMC 18.05.120. The notice shall include the critical area preliminary assessment determination, if already made. Other noticing requirements which may apply to the underlying application or permit shall include notice of critical area, if determined to be present. (Ord. 2811 § 8, 2022; Ord. 2731 § 2 (Exh. A), 2018).

16.15.150 Preapplication meeting.

A. General. The purpose of the preapplication meeting is to discuss the proposal in general terms and the requirements of this chapter, provide critical areas map information, identify potential concerns related to the proposal, and generally outline the applicable requirements, including permits and the review and approval process. Information given at a preapplication meeting is nonbinding. Plans presented at the preapplication meeting are nonbinding and do not vest an application. All applicants, regardless of participation in any preapplication meeting, are held fully responsible for knowledge and disclosure of critical areas on, adjacent to, or associated with a subject parcel and full compliance with the specific provisions and goals, purposes, objectives, and requirements of this chapter.

B. An informal preapplication meeting, pursuant to MTMC 18.05.080 is optional at the discretion of the proponent. The proponent provides basic information on the property and the proposal. The City provides best available information on critical areas on, or in, the vicinity of the property. The City also provides guidance on the expected review and approval process.

C. A formal preapplication meeting, pursuant to MTMC 18.05.080 and this section, is required prior to submitting a formal application for development or use of land, or prior to starting an activity or use of the land, that may be regulated by this chapter.

1. Prior to the meeting, the applicant shall submit information to the City to include:

a. A completed preapplication form.

b. An existing features site plan.

c. A conceptual proposal map.

d. A description of the proposed development or activity.

e. A completed critical area preliminary assessment form.

f. Preliminary critical area reports, if available.

g. Any other information that could be useful to understand and evaluate the proposal and the requirements of this chapter.

2. The City is to review the information submitted and conduct a site visit.

3. At the preapplication meeting, the Director may provide a preliminary determination of the presence of critical areas, pursuant to MTMC 16.15.160. The preliminary determination may include whether critical area reports are required and, if so, what level of detail and what elements may be necessary for the proposal. A preliminary determination does not preclude the Director from requiring additional critical area report

DRAFT

information during the review of the project once applied for. (Ord. 2811 § 9, 2022; Ord. 2731 § 2 (Exh. A), 2018).

16.15.160 Critical area review – Preliminary assessment.

A. Purpose and Applicability.

1. Whenever a proposed use or activity is, or is believed to be, in or adjacent to a critical area, per MTMC 16.15.030, or as shown on the City's critical area maps per MTMC 16.15.080, the proponent shall apply for a "Critical Area Preliminary Assessment" review and determination on a form provided by the City, except the applicant may choose to hire a qualified professional to provide assurances on critical areas and potential impacts and elect to forgo the critical area preliminary assessment process. The purpose of a critical area preliminary assessment review is to evaluate whether a critical area or critical area buffer appears to exist on, or adjacent to, the proposal site, whether the proposed use or activity may affect the critical area, and whether more detailed critical area information is needed.

2. The critical area preliminary assessment process applies only to the current inquiry or proposal and does not mean that further or future review of critical areas impacts may not be required for consistency with this chapter.

3. Proposals that qualify as an exempt activity or use, per MTMC 16.15.100 or 16.15.110, may proceed with the proposal subject to compliance with those sections of this chapter and meeting any other applicable City laws and standards.

4. The property owner may submit for a critical area preliminary assessment with or without a development proposal or development application.

B. Filing Requirements. The applicant shall, at a minimum, prepare and submit the following materials for review:

1. A completed and signed critical area preliminary assessment (CAPA) application form, except the applicant may elect to forgo the critical area preliminary assessment process and proceed directly to preparation of a critical area report per MTMC 16.15.200. The applicant may choose but is not necessarily required to hire a qualified professional to provide assurances on critical areas and potential impacts.

2. Processing fee, if applicable.

3. Vicinity map, one-quarter mile radius from site of proposal, labeled. Show parcel lines.

4. Site plan map, showing location of proposed use/activity, existing structures and improvements, open spaces and habitat connectivity, topography, along with other relevant information, at a scale of one inch equals 20 feet unless otherwise approved by the Director.

5. Other pertinent information (studies, photographs, other).

6. Any materials the applicant considers informative and relevant to the determination process.

7. Any additional materials the Director may request prior to, or subsequent to, submittal of the application when the Director judges it is valid to evaluate and make a preliminary assessment determination.

C. Review and Approval Process. The following steps shall be taken to process a critical area preliminary assessment application to determine the presence or lack of critical areas and/or buffers on a site and whether there may be a potential impact of the proposed use or activity:

1. A preapplication conference per MTMC 16.15.150 is required unless waived by the Director. An informal preapplication conference may be requested by the applicant, pursuant to MTMC 16.15.150(B).

2. Application. The applicant submits the critical area preliminary assessment form together with the filing requirements, other information and any requested materials consistent with subsection B of this section.

DRAFT

3. Determination of Completeness.

a. The Director shall verify the filing requirements in subsection B of this section have been met and reject the application if there are obvious factual errors or omissions, or there are inconsistencies between the submitted materials and observable data, and/or any best available science.

b. When deemed complete, a public notice of application will be issued consistent with MTMC 16.15.140.

4. Review and Decision. The Director shall, in general, review and make a decision based on:

a. Review of the information submitted by the applicant, and other relevant and best available information for site conditions and evidence of critical area.

b. A site visit for a visual check of the potential presence of a critical area on or adjacent to the subject property and potential impact on any critical area or buffer. The site visit will include an assessment of what functions and values the project area and site conditions provide for the critical area.

c. An evaluation whether the proposal is likely to negatively impact the functions and values of a critical area or buffer based on a review of the submittal materials, best available information, the site visit and the criteria per subsection D of this section.

D. Criteria for Decision. The Director shall conclude that one of the following applies to the subject property and issue a written determination of consistency, per subsection E of this section, based on finding the requisite criteria have been met:

1. No critical areas present. No further critical area review is required.

a. The application materials and other available information are complete, pursuant to subsection B of this section, and sufficient to make a determination.

b. The application materials, together with a site visit, reveal that the project area is not within, or adjacent to, a critical area or buffer.

2. Critical areas are present, but no impact. There is no need for a critical area report or mitigation.

a. The application materials and other available information are sufficient to make a determination.

b. The application materials, together with a site visit, reveal that there are critical areas or buffers within or adjacent to the project area.

c. There will be no alteration of the critical area or buffer.

d. The proposed activity is not prohibited within a critical area or its buffer.

e. The proposal is unlikely to degrade the functions or values of the critical area.

3. Critical areas are present; there may be an impact. A critical area report may be required, pursuant to MTMC 16.15.200, to assess the impacts and prepare a mitigation plan.

a. The application materials and other available information are complete pursuant to subsection C of this section and sufficient to make a determination;

b. The application materials, together with a site visit, reveal that the project area is within, or adjacent to, a critical area or buffer;

c. The proposed activity is consistent with exempt or allowed activities within a critical area or its buffer and is not prohibited within a critical area or its buffer;

DRAFT

d. While the project area has no, or low, current function or value for a critical area or buffer, the proposed activity is likely to have a minor impact on and further degrade the functions or values of a critical area or buffer on or adjacent to the project area or site;

e.. A critical area report is required to assess the impacts and prepare mitigation and monitoring plans consistent with MTMC 16.15.200, and mitigation plans, pursuant MTMC 16.15.210 through 16.15.240, as applicable.

E. Decision. The Director shall issue a written determination consistent with conclusions reached per subsection D of this section.

1. The Director may attach conditions to any decision in order to protect critical areas or to require further evaluation and/or special reports to assure protection of critical areas and indicate the reason for the condition.

2. The critical area determination shall be referenced on any permits related to this decision.

3. Required reports shall be consistent with the critical area reporting requirements in this chapter for each critical area type. Critical area reports must be submitted prior to further review of the proposal.

4. The Director's determination regarding the apparent presence or absence of critical areas is not an expert certification regarding critical areas and the determination is subject to possible reconsideration if new information is received.

5. The determination shall be valid up to five years. The critical area preliminary assessment decision does not vest to future permits or land use proposals or applications.

6. Notice on Title. The applicant shall record a notice on title, consistent with MTMC 16.15.250, except when a determination of no critical areas is made.

7. The applicant may proceed with the proposal subject to the decision and any conditions thereto, and meeting all applicable City laws and standards.

F. Appeal. The decision may be appealed, pursuant to MTMC 16.15.385. (Ord. 2731 § 2 (Exh. A), 2018).

16.15.200 Critical area reports.

A. Report Required. When uses, activities, or developments are proposed within, adjacent to, or are likely to impact critical areas or their buffers, an applicant shall provide site-specific information and analysis in the form of critical area report(s) as required in this chapter. A critical area report shall identify the presence, extent, and classification/rating of potential critical areas, as well as analyze, assess, and mitigate the potential adverse impact to or risk from critical areas for a development project.

B. Critical area reports shall be prepared using best available science to evaluate the proposal and all probable impacts to critical areas in accordance with the provisions of this chapter.

C. Preparation by Qualified Professional. When a critical area report is required it shall be prepared by a qualified professional. Proof of licensing, credentials, and resume of the qualified professional(s) preparing the report shall be included in the report, which the Director shall review to determine if the minimum qualifications are met.

D. Minimum Report Contents. The report shall contain adequate information to determine compliance with the requirements of the critical area regulations in this chapter, specific to each critical area type, as indicated in the corresponding sections of this chapter. Reports for two or more types of critical areas must meet the reporting requirements for each type of critical area. Critical area reports can be submitted as multiple reports or combined in one report. The scope and location of the proposed project will determine which report(s) alone, or combined, are sufficient to meet the critical area report requirements for the impacted critical area type(s).

At a minimum, a critical area report shall contain the following:

1. The name and contact information of the applicant.

DRAFT

2. The dates, names and qualifications of the qualified professionals preparing the report or who contributed to the report and documentation of any fieldwork performed by them on the site.

3. Locational information including address, parcel number(s), legal description and a vicinity map.

4. A list of the development permit(s) associated with the proposal, including other agency critical area-related permits required for the project.

5. A copy of the site plan for the development proposal, drawn to scale to show the location of critical areas, buffers, the development proposal, and any areas to be cleared or otherwise impacted.

6. Identification and characterization of all critical areas and buffers, open space and habitat connectivity, on- and off-site, adjacent to the proposed project area, per MTMC 16.15.020, and the corresponding reporting requirements applicable to the identified critical areas as set forth in this chapter.

a. Site designation as shown on a regional, state or federal inventory map (such as National Wetland Inventory Map by U.S. Fish and Wildlife Service).

b. Designations as shown on any city inventory map.

c. Location of the critical area boundaries shall be accurately drawn at an appropriate engineering scale such that the information is clearly legible. Generally, a scale of one inch equals 20 feet shall be used (other preapproved scales may be acceptable). Existing features must be distinguished from proposed features. The map shall show:

i. Site boundary property lines and roads;

ii. Internal property lines, rights-of-way, easements, etc.;

iii. Existing physical features of the site including buildings, fences, and other structures, roads, parking lots, utilities, water bodies, etc.;

iv. Contours at the smallest readily available intervals, preferably at two-foot intervals;

v. Delineated boundary of critical area (when multiple critical areas exist, each shall be prepared on a separate sheet and then shown on a composite sheet);

vi. Location of all test holes and vegetation sample sites, numbered to correspond with flagging in the field and field data sheets;

vii. For large and/or complex projects, an air photo with overlays displaying the site boundaries and wetland delineation may be required. Generally, an orthophotograph at a scale of one inch equals 400 feet or greater (such as one inch equals 200 feet) should be used. If an orthophotograph is not available, the center of a small scale (e.g., one inch equals 2,000 feet) aerial photograph enlarged to one inch equals 400 feet may be used.

7. A description of the methodologies used to conduct the critical areas investigation, including references and data sheets. Methodologies must include justification for selected assumptions, error margins, and identification of scientific uncertainty. Reports may not rely solely on short-term site observations when long-term ecological processes are relevant.

8. A description of the proposed stormwater management plan for the development and consideration of impacts to drainage alterations, when applicable.

9. Report Sections. A critical area report shall typically include the following sequence of report sections, unless modified pursuant to subsection E of this section:

DRAFT

a. Reconnaissance. This section of the report shall describe the general site conditions including topography and acreage, all natural and manmade features within 200 feet of the site boundary, and the existence, general location, and type of critical areas on, and in the vicinity of, a project site. A determination whether the project will adversely impact, or be at risk from, the potential critical areas based on maximum potential buffers should be addressed;

b. Delineation. This section of the report shall identify the extent, boundaries, rating or classification, and applicable standard buffers of critical areas where the project area could potentially impact the critical area or its buffer, including an assessment of the characteristics of, or functions and values of, the critical area and buffers identified;

c. Analysis. This section of the report is an impact assessment documenting the potential project impacts to the critical area and buffers including a discussion of the efforts taken to avoid, minimize, and reduce potential impacts to those areas, consistent with MTMC 16.15.210;

d. Mitigation. This section of the report describes actions and measures that will be taken to prevent or compensate for the potential impacts of the project in accordance with the mitigation plan requirements of this chapter and the standards for the specific critical areas impacted. If any impacts to critical areas or their buffers are proposed, the applicant must demonstrate that the following were considered as options to satisfy the avoidance of impacts, if appliable:

i. Alternative building locations on the property;

ii. Adjustments to the project footprint and orientation;

iii. Modification of non-critical area setbacks, where feasible;

iv. Multi-story design or alternate building design

When impacts cannot be avoided, mitigation includes, but is not limited to, adjustments to required buffer sizes, best practices to minimize impacts, and critical area or buffer enhancement, restoration, or preservation plans. Mitigation plans may include habitat management plans, revegetation or replanting plans, and restoration plans, and identify appropriate performance standards, as applicable. When mitigation is required, the applicant shall submit a mitigation plan per MTMC 16.15.220 and 16.15.230, this section, and the mitigation provisions for the applicable critical area type per MTMC 16.15.400 through 16.15.450;

e. Maintenance and Monitoring. Maintenance and monitoring plans must be consistent with maintenance and monitoring plan requirements pursuant to MTMC 16.15.240. The goals of the mitigation proposed, performance standards for success, monitoring methods and reporting schedule, maintenance methods and schedule, and contingency actions must be adequately addressed. Include cost estimates for determination of financial guarantee requirements to ensure implementation and compliance.

10. A statement of the accuracy of the report and all assumptions made can be relied upon.

11. Any additional reporting information required in the corresponding critical area reporting sections per MTMC 16.15.400 through 16.15.450.

12. Additional Information Requirements. The Director may require additional information to be included in the critical area report when determined to be necessary to the review of the proposed activity in accordance with this chapter, which may include, but is not limited to:

a. Historical data, including original and subsequent mapping, aerial photographs, data compilations and summaries, and available reports and records relating to the site or past operations at the site; and

b. Clearing, grading and drainage plans.

DRAFT

13. A critical area report may be supplemented by reports or studies previously prepared for and applicable to the development proposal site, subject to the five-year limit of validity of contents per subsection F of this section. Previously prepared studies may not be used when updated BAS, salmon recovery science, or new field data indicate greater habitat sensitivity than previously understood.

E. Modifications to Report Requirements. The Director may allow modifications to the report contents to be prepared under the following circumstances. The Director reserves the right to subsequently require such information. Permitted modifications shall be identified in the determination of complete application.

1. Prior to the preparation of a report, the Director has determined that some filing requirements do not apply to the proposal.

2. The applicant has consulted with and obtained approval from the Director, prior to or during preparation of a critical area report, to modify the required contents of the report where, in the judgment of a qualified professional and concurrence of the Director, more or less information is required to adequately address the potential critical area impacts and required mitigation.

3. The Director may limit the required geographic area of the critical area report if:

a. The applicant, with assistance from the City, cannot obtain permission to access properties adjacent to the project area, in which case the critical area size and characteristics beyond the project area may be estimated through aerial photography, visual interpretations, discussion with agencies or some other acceptable means; or mitigation.

b. The proposed activity will affect only a limited part of the subject site.

F. Existing Reports and Expiration.

1. Critical area reports shall be considered valid for up to five years. Thereafter, the Director shall determine whether a revision or additional assessment is necessary per subsection (F)(2) or (3) of this section, or consult a third party to make that determination per subsection G of this section. Supplemental critical area report(s) may be required to provide information and analysis to address changes to the project scope and potential impacts or to changes to applicable regulations that have been made subsequent to existing, valid critical area reports.

2. A critical area report prepared within the last five years may be incorporated into, supplement, or submitted in its entirety as the critical area report for a proposal; provided, that such previously prepared report or study is applicable to the proposed location, use, activity or development, and the proposed land use activity and surrounding site conditions are substantially unchanged.

3. A qualified professional shall evaluate the previously prepared reports, the proposal, and the current environmental conditions associated with the site and submit a letter of validity, sufficiency, verification, or recommendation regarding all of the following:

a. The provisions in subsection (F)(1) of this section are met; and

b. The report, or used sections thereof, meets the requirements of this section and the reporting requirements for each specific critical area type; and

c. A recommendation on the extent to which the previously prepared report(s) can be used and any supplemental information to be prepared and submitted to meet the requirements of this chapter. The recommendation can be to reject the previously prepared materials entirely.

G. Third Party Review of Critical Area Reports.

1. The purpose of third party review is to protect critical areas, maintain public safety, protect public health and property, and to ensure that the nature and extent of critical areas and any associated buffers are correctly determined, protected and restored. The City shall attempt to resolve any issues with the original author(s) or applicant before requiring third party review.

DRAFT

2. The Director shall state in writing the reasons for requiring the third party review. Third party review will be conducted by a qualified professional under contract with, or employed by, the City, at the applicant's expense, when the Director determines:

a. The submission contains factual errors, omissions, faulty analytical procedures, or incomplete analysis; or

b. Inconsistencies exist between the submitted materials and observable data, and/or accepted scientific or technical criteria; or

c. Such services are necessary to demonstrate compliance with the standards and guidelines of this chapter; or

d. Specialized expertise is required for adequate review of a proposal.

3. The third party review shall evaluate the validity and applicability of previous reports, if any, applicant's methodology, adequacy of data collection, the analysis and findings, and the effectiveness of any proposed mitigation, monitoring plans and guarantee measures or programs proposed by the applicant as sufficient to protect the critical areas and include any recommendations as appropriate.

4. The Director shall consider the third party review and recommendations and determine if the report and plans, with the recommendations, are sufficient to protect critical area, consistent with the requirements of this chapter. (Ord. 2731 § 2 (Exh. A), 2018).

16.15.210 Mitigation –Sequencing and location.

When alterations and impacts to critical areas cannot be avoided, compensatory mitigation to replace a critical area or buffer and its functions may be permitted so long the critical area functions and values can be replaced.. Compensatory mitigation is not allowed for critical aquifer recharge areas. Mitigation includes, but is not limited to, adjustments to required buffer sizes, best practices to minimize impacts, and critical area or buffer enhancement, restoration, or preservation plans. Mitigation actions may be implemented on or off site based on the preferred location identified in this section.

A. Mitigation Sequencing. Mitigation is to be provided in the following order:

1. Avoiding the impact altogether by not taking a certain action or parts of an action.

2. Minimizing impacts by limiting the degree or magnitude of the action and its implementation, by using appropriate technology, or by taking affirmative steps to avoid or reduce impacts.

3. Rectifying the impact by repairing, rehabilitating, or restoring the affected environment.

4. Reducing or eliminating the impact over time by preservation and maintenance operations.

5. Compensating for the impact by replacing, enhancing, or providing substitute resources or environments.

6. Monitoring the impact and taking appropriate corrective measures.

B. Location of Mitigation. The replacement of critical areas, buffers, and functions shall generally occur at or adjacent to the site on which a critical area has been or will be altered or impacted by an allowed use or activity, except when the applicant can demonstrate that off-site mitigation is ecologically preferable. Mitigation sequencing shall consider and/or perform mitigation actions in a priority order from avoidance to compensation. Compensatory mitigation actions shall generally be conducted within the same subdrainage basin and on the site of the alteration.

1. On-Site Mitigation. The replacement of critical areas, buffers, and functions shall be provided on site. Mitigation may be allowed off site only when it is determined by the Director that on-site mitigation is not scientifically feasible or practical due to physical features of the property, or where the affected site is identified as appropriate for off-site mitigation, pursuant to an off-site mitigation program. The burden of proof,

DRAFT

based on a preponderance of the evidence, shall be on the applicant to demonstrate that mitigation cannot be provided on site.

2. Off-Site Mitigation. Off-site mitigation is allowed when there are no reasonable opportunities on site, on-site mitigation would require elimination of high-quality upland habitat, or off-site opportunities have a greater likelihood of providing equal or improved functions than the altered site. Off-site mitigation shall be provided in the same drainage basin as the permitted activity on property owned, secured, or controlled by the applicant where such mitigation is practical and beneficial to the critical area and associated resources.

3. Mitigation Bank. For mitigation of wetland impacts, a wetland mitigation bank is an alternative to on-site permittee-responsible mitigation; provided, that:

a. Credits from a wetland mitigation bank may be approved for use as compensation for unavoidable impacts to wetlands when:

i. The bank is certified under state rules;

ii. The City determines that the wetland mitigation bank provides appropriate compensation for the authorized impacts; and

iii. The proposed use of credits is consistent with the terms and conditions of the certified bank instrument.

b. Replacement ratios for projects using bank credits shall be consistent with replacement ratios specified in the certified bank instrument.

c. Credits from a certified wetland mitigation bank may be used to compensate for impacts located within the service area specified in the certified bank instrument. In some cases, the service area of the bank may include portions of more than one adjacent drainage basin for specific wetland functions.

4. In-Lieu Fee. To aid in the implementation of off-site mitigation, the City may develop an in-lieu fee (ILF) program. This program shall be developed and approved through a public process and be consistent with federal rules, state policy on in-lieu fee mitigation and state water quality regulations. An approved ILF program sells compensatory mitigation credits to permittees whose obligation to provide compensatory mitigation is then transferred to an ILF program sponsor. The sponsor of an ILF program must be a nonprofit organization such as a local land trust, private conservation group, or government agency with demonstrated competence in natural resource management. Credits from an approved ILF program may be used when the conditions below apply:

a. The Director determines that it would provide environmentally appropriate compensation for the proposed impacts.

b. The mitigation will occur on a site identified using the site selection and prioritization process in the approved in-lieu fee program instrument.

c. The proposed use of credits is consistent with the terms and conditions of the approved in-lieu fee program instrument.

d. Land acquisition and initial physical and biological improvements of the mitigation site must be completed within three years of the credit sale.

e. Projects using in-lieu fee credits shall have debits associated with the proposed impacts calculated by the applicant's qualified professional wetland scientist using the method consistent with the credit assessment method specified in the approved instrument for the in-lieu fee program.

f. Credits from an approved in-lieu fee program may be used to compensate for impacts located within the service area specified in the approved in-lieu fee instrument.

DRAFT

5. In-Kind Mitigation. In-kind mitigation, or in-kind compensation, is intended to replace a critical area whose characteristics and functions closely approximate those destroyed or degraded by a regulated activity.

6. Out-of-Kind Mitigation. Allows mitigation that will replace critical area, buffer and their functions, away from the site on which a critical area has been impacted, with a substitute critical area, buffer or function, whose characteristics do not closely approximate those adversely affected, destroyed or degraded by an allowable use or activity. Out-of-kind-mitigation shall be permitted only when it has been demonstrated, based on a preponderance of evidence and the Director concurs, that greater function and habitat value can be achieved than with in-kind mitigation. (Ord. 2731 § 2 (Exh. A), 2018).

16.15.220 Mitigation plan – Requirements.

Mitigation shall be sufficient to maintain or compensate for the impacted functions and values of the critical area and to prevent risk from a hazard posed by a critical area. Mitigation shall not be implemented until after the Director has provided approval of a critical area report that includes a mitigation plan.

A. Mitigation Plan Standards. The following standards are the minimum requirements that a mitigation plan is to satisfy:

1. Adverse impacts to critical area functions and values shall be mitigated to achieve functionally equivalent or greater biologic functions.

2. Proposals which include less preferred and/or compensatory mitigation shall demonstrate that:

a. All feasible and reasonable measures have been taken to reduce impacts and losses to the critical area, or to avoid impacts where avoidance is required by this chapter;

b. The restored, created or enhanced critical area or buffer will be as viable and enduring as the critical area or buffer area it replaces;

c. In the case of wetlands and streams, no overall net loss will occur in wetland or stream functions and values. The mitigation shall be functionally equivalent to the altered wetland or stream in terms of hydrological, biological, physical, and chemical functions; and

d. When wetland, stream or habitat mitigation is permitted on site, or off site, by these regulations, the mitigation project shall occur near an adequate water supply (river, stream, ground water) with a hydrologic connection to the critical area to ensure a successful mitigation or restoration. A natural hydrologic connection is preferential as compared to one which relies upon manmade features requiring routine maintenance.

3. Any agreed-upon mitigation plan shall be completed before initiation of other permitted activities, unless a phased or concurrent schedule that assures completion prior to occupancy has been approved by the Director.

B. When mitigation is required, the applicant shall submit a mitigation plan, pursuant to this section, as part of the critical area report for approval by the Director. The mitigation plan shall include:

1. A written report identifying environmental goals and objectives of the compensation proposed, to include:

a. A description of the anticipated impacts to the critical areas and the mitigating actions proposed and the purposes of the compensation measures, including the site selection criteria; identification of compensation goals; identification of resource functions; and dates for beginning and completion of site compensation construction activities. The goals and objectives shall be related to the functions and values of the impacted critical area;

b. A review of the best available science supporting the proposed mitigation and a description of the report author’s experience to date in restoring or creating the type of critical area proposed;

c. An analysis of the likelihood of success of the mitigation plan;

DRAFT

d. Written specifications and descriptions of the mitigation proposed, such as:

i. The proposed construction sequence, timing, and duration;

ii. Grading and excavation details;

iii. Erosion and sediment control features;

iv. A planting plan specifying plant species, quantities, locations, size, spacing, and density;

v. Measures to protect and maintain plants until established; and

vi. Detailed site diagrams, scaled cross-sectional drawings, topographic maps showing slope percentage and final grade elevations, and any other drawings appropriate to show construction techniques or anticipated final outcome.

2. The mitigation plan may include a habitat management plan, revegetation or replanting plan, and/or restoration plan.

3. Performance standards, pursuant to MTMC 16.15.230.

4. A maintenance and monitoring plan, pursuant to MTMC 16.15.240.

5. The mitigation plan shall also include a contingency plan to identify potential courses of action and any corrective measures to be taken if monitoring or evaluation indicates project performance standards are not being met.

C. Mitigation shall be completed immediately following disturbance, and prior to use or occupancy of the action or development. Construction of mitigation projects shall be timed to reduce impacts to existing fisheries, wildlife, and flora. On completion of construction, any approved mitigation project must be signed off by the applicant's qualified professional and approved by the Department. Signature will indicate that the construction has been completed as approved. (Ord. 2731 § 2 (Exh. A), 2018).

16.15.230 Mitigation plans – Performance standards.

A. The mitigation plan shall include performance standards of measurable specific criteria for evaluating whether or not the goals and objectives of the mitigation project have been successfully attained and whether or not the requirements of this chapter have been met.

B. The mitigation plan shall include any additional specific performance standards that apply to critical area types, per this chapter.

C. A performance and maintenance guarantee shall be provided consistent with MTMC 16.15.340. (Ord. 2731 § 2 (Exh. A), 2018).

16.15.240 Maintenance and monitoring plan.

A. A maintenance and monitoring plan shall be prepared and implemented by the applicant, pursuant to this section, to evaluate and assure the success of the required mitigation measures, to determine if the mitigation plan's goals and objectives are being met, and to determine necessary corrective actions. This plan shall be reviewed and approved by the Department prior to implementation.

B. In general, the maintenance and monitoring plan shall identify what monitoring data will be collected and how it will be collected, describe how the monitoring data will be evaluated to determine if the performance standards are being met, and identify corrective action and when implementation standards are met. The contents of the maintenance and monitoring plan shall include:

1. Appropriate, accepted, and unbiased qualitative or precise and accurate quantitative sampling methods by which to evaluate the success or failure of the project compared to performance standards approved by the City;

DRAFT

2. An outline of the quantitative sampling methods that include permanent photopoints installed at the completion of construction and maintained throughout the monitoring period and shall also include permanent transects, sampling points (e.g., plots or quadrants or water quality or quantity monitoring stations), and wildlife monitoring stations;

3. Clearly stipulated qualitative and quantitative sampling methods that are approved by the City or the qualified professional selected or approved by the City to review the monitoring plan before implementation by the project proponent;

4. Appropriate qualitative and/or quantitative performance standards that will be used to measure the success or failure of the mitigation. These will include, at a minimum, standards for plant survival and diversity, including structural diversity, the extent of wetland hydrology, hydric soils, and habitat types and requirements as appropriate; all proposed standards are subject to review and approval by the City or the qualified professional selected by the City to review the monitoring plan;

5. Monitoring plans shall include, at a minimum: preparation of an as-built (baseline) plan; an outline of the site monitoring and maintenance schedule to include periodic removal of noxious weeds and revegetation; semi-annual site inspection to collect and analyze data of the status of the mitigation measures implemented; preparation of annual monitoring reports following implementation; a contingency plan in the event that implementation of the mitigation plan is inadequate or fails;

6. Monitoring reports shall be submitted to the Department by December 1st of the year in which monitoring is conducted. The reports are to be prepared by a qualified professional and must contain all qualitative and quantitative monitoring data, photographs, and an evaluation of each of the applicable performance standards from each semi-annual monitoring evaluation. If performance standards are not being met, appropriate corrective or contingency measures must be identified and implemented to ensure that performance standards will be met;

7. Time Period. The monitoring period begins after an as-built report is submitted and approved by the City. Monitoring of the project mitigation shall be for a period necessary to establish that performance standards have been met, but not for less than five years. More stringent monitoring requirements may be required on a case-by-case basis for more complex mitigation plans; for example, if a scrub-shrub or forested vegetation community is proposed, monitoring may be required for 10 years or more. The project mitigation plan shall include monitoring elements that ensure certainty of success for the project's natural resource values and functions. This will include data collection and annual reports, at a minimum. If the mitigation goals are not obtained within the initial five-year period, the applicant remains responsible for restoration of the natural resource values and functions until the mitigation goals agreed to in the mitigation plan are achieved;

8. The plan shall include a provision for extension of the monitoring period beyond the minimum time frame if performance standards are not being met at the end of the initial monitoring period; and provision for additional financial securities or guarantees to ensure that any additional monitoring and contingencies are completed to ensure the success of the mitigation.

C. A performance and maintenance guarantee shall be provided consistent with MTMC 16.15.340. (Ord. 2731 § 2 (Exh. A), 2018).

16.15.250 Notice on title.

A. The purpose of recording a notice of critical area presence on the title of an affected property is to inform subsequent purchasers of their existence on said property. The notice shall be approved by the Director for compliance with this section. The notice does not vest any critical areas. The notice shall run with the land.

B. A notice on title is required whenever the presence of a critical area or buffer has been identified and no further evaluation has been made, a critical area or buffer has been delineated with or without further action on the property, or an application has been made for a site development, subdivision, or construction permit for the property containing a critical area or buffer.

DRAFT

C. The location of the critical areas and those contiguous critical areas and buffers, listed below, that total 200 or more square feet, shall be delineated and protected, except as otherwise indicated:

1. All wetlands and buffers;

2. Any stream water type F, Np or Ns, regardless of the square footage;

3. All habitat conservation areas;

4. All severe landslide hazard areas and buffers; and

5. All other lands to be protected from alterations as conditioned by project approval.

6. Open spaces or corridors connecting wildlife habitats.

D. Form and Content of Notice.

1. The notice form and required content shall be provided by the Department.

2. The notice shall state the presence of the critical area or buffer on the property, that this chapter and any amendments thereto apply to the property, and that there may be one or more critical areas or buffers.

3. Any site-specific modifications, restrictions to development, and limitations on actions in or affecting the critical areas shall be clearly noted on the notice and plat or site plan.

4. The recorded notice shall include a map to indicate the general location and type of critical areas.

5. In the case of subdivisions or development, an easement or tract shall be created per subsection E of this section and shown in a format approved by the Department on the face of the drawing to be recorded, pursuant to subsection F of this section.

E. Critical Area Tract, Protection Area Easement, or Dedication. A critical area tract, protection area easement, or dedication may be used to protect a critical area and/or buffer from future alteration.

1. A critical area tract shall be created as part of a site development or subdivision action. The subdivision drawing or project site plan shall clearly depict the critical area tract to include all of the subject critical area, any required buffer, and any additional lands included voluntarily by the developer. The applicant may establish a separate critical area tract for each critical area type.

2. A protection easement shall be created on a property where no subdivision or site plan is proposed, but a critical area report has been prepared and critical areas identified or delineated.

3. Dedication of Critical Area. The City may require a critical area tract be dedicated to the City, held in an undivided interest by each owner of a building lot within the development with the ownership interest passing with the ownership of the lot, or held by an incorporated homeowner’s association or other legal entity which ensures the ownership, maintenance, and protection of the tract (such as a land conservation trust).

4. When the critical area has already been delineated, it shall be shown on the recording document with the legal description of the critical area.

F. Recording the Notice, Tract, Easement, or Dedication.

1. The property owner shall record the notice, easement, or tract, at their expense, with the Snohomish County Auditor’s Office Recording Division.

2. The applicant shall submit proof that the notice has been recorded on title before the Director approves any site development or construction permit, or at or before the recording of any type of subdivisions or phased development project.

DRAFT

G. Extinguishment of Notice. The titleholder has the right to challenge a notice and to have it extinguished if it can be documented that the presence of critical area no longer applies. The titleholder shall apply for a critical area preliminary assessment, pursuant to MTMC 16.15.160, and submit a critical area report, pursuant to MTMC 16.15.200, for review and approval by the Director per MTMC 16.15.120, before the notice on title can be extinguished. The extinguishment shall be recorded per subsection F of this section. (Ord. 2731 § 2 (Exh. A), 2018).

16.15.260 Signs and fencing.

Short- and long-term protection of critical areas is necessary to minimize damage to critical areas, to ensure the success of restoration or mitigation and to protect their functions and values. The following signage and fencing provisions may be modified by the Director as necessary to ensure protection of sensitive features or wildlife needs.

A. Signage. The boundary at the outer edge of the critical area or buffer shall be identified with temporary signs prior to any site alteration. Such temporary signs shall be replaced with permanent signs prior to occupancy or use of the site.

1. Temporary Markers. Prior to the commencement of permitted activities, pursuant to an approved permit or authorization, the perimeter of the critical area or buffer and the limits of those areas to be disturbed shall be marked in the field in such a way as to ensure that no unauthorized intrusion will occur and is subject to inspection by the City. The location and quantity of signs shall be determined by the Director. Temporary markers shall be maintained throughout construction and not be removed until permanent signs, if required, are in place.

2. Permanent Signs. When a permanent sign is required as a condition of any permit or authorization issued, pursuant to this chapter, the applicant shall install permanent signs along the boundary of a critical area or buffer as follows:

a. Signs shall be made of an enamel-coated metal face and attached to a metal post, or another nontreated material of equal durability.

b. Signs must be posted at an interval of one per lot or every 100 feet, or at the discretion of the Director.

c. The sign shall be worded as follows or with alternative or additional language approved by the Director. Graphics similar to what is shown below is encouraged and may be required.

Protected (insert name of critical area type)

Do Not Disturb

Contact the City of Mountlake Terrace

Regarding Uses and Restriction

Example Sign

d. Signs must be maintained by the property owner in perpetuity.

B. Fencing.

1. Fencing of critical areas is required when called for in a critical area report or mitigation plan, when any of the circumstances described in subsection (B)(3) of this section apply, or when the Director determines that such fencing is necessary to protect the functions and/or values of a critical area. Fencing may be temporary or permanent or both. The Director may also waive this requirement.

2. Temporary fencing shall be installed to protect critical areas during construction activities or intermittent activities that may impact such critical areas. Temporary fencing shall be appropriate for the location and critical area at the discretion of the Director.

3. Permanent fencing shall be installed at the outer edge of the critical areas in the following circumstances:

a. As part of any development proposal affecting a critical area or buffer;

DRAFT

b. As part of a use or activity in a park where the adjacent existing or proposed use is active recreation and the Director determines that such fencing is necessary to protect the functions of the critical area;

c. When buffer averaging is employed as part of a development proposal;

d. When buffer reductions are employed as part of a development proposal; or

e. As part of a proposal, whether or not a permit is required, on any parcel that affects the critical area and buffer.

4. The location, materials, height, and type of fencing shall be consistent with standard detail below. Alternatives designs associated critical area report and mitigation plan may be approved.

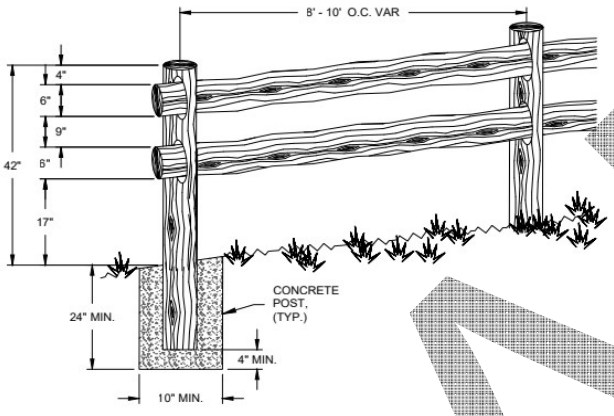

NOTES:

1. POSTS ARE TO BE 6 INCH DIAMETER ROUGH CEDAR.
2. RAILS ARE TO BE SPLIT CEDAR, 3"x4"x4" TRIANGLE SIDES MINIMUM.

5. Fencing shall not interfere with species migration, including fish runs, and shall be constructed in a manner that minimizes habitat impacts. Breaks in permanent fencing may be allowed for access to permitted buffer uses.

6. Fences must be maintained by the property owner in perpetuity. (Ord. 2731 § 2 (Exh. A), 2018).

16.15.270 Protective covenants.

A. Long-term protection of a regulated critical area and its associated buffer shall be required, when applicable, as a condition of an approved permit or authorization, consistent with MTMC 16.15.250, Notice on title. The means of protection can be provided for in one of the following ways:

1. Separate critical areas tract;

2. Execution of an easement;

3. Dedication to a conservation organization or land trust; or

4. Preserved through a comparable permanent protective mechanism acceptable to the City such as a dedication.

B. The location and limitations associated with the critical area and its buffer shall be shown on a document prepared for that purpose, on the face of the deed or the face of the plat applicable to the property. The City shall review and find the protection document acceptable, prior to the applicant recording it on the property title, pursuant to MTMC 16.15.250. (Ord. 2731 § 2 (Exh. A), 2018).

DRAFT

16.15.310 Alteration of critical areas.

A. Purpose and Applicability.

1. Critical areas shall, in general, be maintained in their natural state or current legally established condition, including undisturbed, native vegetation to maintain the functions, values, resources, and public health and safety for which they are protected.

2. An “alteration of a critical area” means any human induced change to, addition to, or modification of an existing condition, structure, or use of a critical area or its buffer that changes the existing character of the critical area.

3. Alteration of critical areas, including their established buffers, may only be permitted subject to the criteria and standards in this chapter, and compliance with any federal and/or state permits required.

4. Unless otherwise provided in this chapter, if alteration of the critical area is unavoidable, all adverse impacts to or from critical areas and buffers resulting from a development proposal or alteration shall be mitigated in accordance with an approved critical area report and mitigation plan per MTMC 16.15.200 and 16.15.210, so the result is no overall net loss of critical area functions and values, and no increased risk of hazards.

B. Review Criteria. Any alteration to a critical area, unless otherwise provided for in this chapter, shall be evaluated based on the proposal’s ability to comply with the following criteria:

1. The proposal is consistent with the alteration provisions for the critical area type per 16.15.400 through 16.15.450;

2. The proposal avoids impact to the critical area altogether. Where this is not possible, the proposal minimizes the impact on critical areas in accordance with MTMC 16.15.210;

3. The proposal does not pose an unreasonable threat to the public health, safety, or welfare on or off the development proposal site;

4. The proposal protects the critical area functions and values consistent with the best available science and results in no net loss of critical area functions and values;

5. A restoration plan has been prepared, pursuant to MTMC 16.15.330;

6. The mitigation plan has been amended, and/or the restoration plan prepared consistent with any conditions, and approved by the City prior to issuance of any construction permits. Construction techniques shall be approved by the City prior to any site work.

C. Decision. Pursuant to MTMC 16.15.120(D), the proposal shall be reviewed and approved, approved with conditions, or denied subject to a determination by the Director the following have been met:

1. The submittal for alteration is found responsive to the criteria in subsection B of this section.

2. Any other filing requirements, as set forth by the Director, are submitted and found satisfactory. The submittal shall include an affidavit by the applicant, which declares whether the applicant has knowledge of any illegal alteration to any or all wetlands on the proposed site and whether the applicant previously had been found in violation of this chapter. If the applicant has been found previously in violation, the applicant shall declare whether such violation has been corrected to the satisfaction of the jurisdiction.

3. Notice on title shall apply, pursuant to MTMC 16.15.250. (Ord. 2731 § 2 (Exh. A), 2018).

16.15.320 Unauthorized alterations of critical areas.

A. When a critical area or its buffer has been altered in violation of this chapter, the City may issue a stop work order and order restoration of the critical area.

DRAFT

B. All development work shall remain stopped until the requirements of MTMC 16.15.310 and 16.15.330 have been satisfied and the critical area restored.

C. Unauthorized alteration of a critical area shall be considered a violation of this chapter and may be subject to the provisions of MTMC 16.15.380. (Ord. 2731 § 2 (Exh. A), 2018).

16.15.330 Restoration plan.

A restoration plan shall be prepared consistent with the requirements, criteria, and performance standards of this section.

A. A restoration plan is required when needed to reestablish the critical area's functional characteristics and processes that have been lost by project-induced alterations to critical areas, or activities or catastrophic events have occurred within an area so that it no longer meets the definition of such critical area.

B. A restoration plan shall be prepared by a qualified professional using the best available science and describe how the actions proposed meet the minimum requirements described in subsection E of this section. The Director may require third party review per MTMC 16.15.200(G).

C. Restoration, and any other required measures, are at the owner's or other responsible party's expense to remediate the impacts of the violation of the provisions of this chapter. All ongoing development work shall stop and the critical area shall be restored.

D. At the Director's discretion, and based on the severity of the alterations, the submittal, review, and approval process of the restoration plans required for remediation of violations of this chapter shall be determined by the Director and may be elevated to a site permit application process, including fees.

E. Minimum Performance Standards for Restoration.

1. For alterations to critical aquifer recharge areas, wetlands, streams, and fish and wildlife habitat conservation areas, the following minimum performance standards shall be met for restoration; provided, that if the violator can demonstrate that greater functional and habitat values can be obtained, these standards may be modified:

a. The previolation function and values of the affected critical areas and buffers shall be restored, including water quality and habitat functions;

b. The previolation soil types and configuration shall be replicated;

c. The critical area and buffers shall be replanted with native vegetation that replicates the vegetation historically, or previolation, found on the site in species types, sizes, and densities. The previolation functions and values should be replicated at the location of the alteration; and

d. Information demonstrating compliance with the requirements in MTMC 16.15.220 and the applicable mitigation sections for the affected type(s) of critical area(s) and their buffer(s) shall be submitted to the Director with the complete, applicable permit application.

2. For alterations to flood hazard and geologic hazard areas, the following minimum performance standards shall be met for the restoration of a critical area; provided, that if the violator can demonstrate that greater safety can be obtained, these standards may be modified:

a. The hazard shall be reduced to a level equal to or less than the previolation hazard;

b. Any risk of personal injury resulting from the alteration shall be eliminated or minimized; and

c. The hazard area and buffers shall be replanted with native vegetation sufficient to minimize the hazard.

F. Site Investigations. The Director is authorized to make site inspections and take such actions as are necessary to enforce this chapter. The Director shall present proper credentials and make a reasonable effort to contact any property owner before entering onto private property. (Ord. 2731 § 2 (Exh. A), 2018).

DRAFT

16.15.340 Guarantees to ensure mitigation, maintenance, and monitoring.

A. If the development proposal is subject to mitigation, the applicant shall post a mitigation guarantee or other security in a form and amount deemed acceptable by the City to ensure mitigation is fully functional.

B. When mitigation required for a development proposal is not completed prior to final permit approval, such as final plat approval or final building inspection, the applicant shall be required to post a performance guarantee, bond or other security in a form and amount deemed acceptable by the Director.

C. The guarantee shall be in the amount of 150 percent of the estimated cost of the uncompleted actions or the estimated cost of restoring the functions and values of the critical area that are at risk, whichever is greater. The amount of the performance guarantee shall include a reasonable allocation for inflation based on the length of anticipated delay and the provisions of subsection E of this section.

D. The guarantee shall be in the form of a surety bond, performance bond, and/or maintenance bond from an acceptable financial institution, or other acceptable form of warranty as permitted consistent with Chapter 15.35 MTMC, Performance Guarantees and Warranties.

E. Guarantees or other security authorized by this section shall remain in effect until the Director determines, in writing, that the standards bonded for have been met. Guarantees or other security shall be held by the City for a minimum of five years to ensure that the required mitigation has been fully implemented and demonstrated to function, and may be held for longer periods when necessary to achieve these goals. The Director may agree to reduce the guarantee in proportion to work successfully completed over the period of the guarantee.

F. Depletion, failure, or collection of guarantee funds shall not discharge the obligation of an applicant or violator to complete required mitigation, maintenance, monitoring, or restoration.

G. Public development proposals shall be relieved from having to comply with the guaranteeing requirements of this section if public funds have previously been committed for mitigation, maintenance, monitoring, or restoration.

H. Any failure to satisfy critical area requirements established by law or condition including, but not limited to, the failure to provide a monitoring report within 30 days after it is due or comply with other provisions of an approved mitigation plan shall constitute a default, and the City may demand payment of any financial guarantees or require other action authorized under this chapter or any other law. Any funds recovered, pursuant to this section, shall be used to complete the required mitigation. (Ord. 2731 § 2 (Exh. A), 2018).

16.15.350 Variances.

A. Requests for relief from the dimensional or performance standards of this chapter shall require a critical areas variance provided the Hearing Examiner finds that all criteria listed in B have been met..

B. Criteria. The variance may be granted only if the applicant demonstrates that the requested action is consistent with all of the following criteria:

1. There are special circumstances applicable to the subject property or to the intended use such as shape, topography, location, or surroundings that do not apply generally to surrounding properties or that make it impossible to redesign the project to preclude the need for a variance;

2. The special conditions and circumstances are not a result of the actions of the applicant, owner, or previous owner;

3. The applicant has avoided impacts and provided mitigation to the maximum practical extent;

4.; The critical area buffer reduction proposed through the variance is the minimum necessary to accommodate the permitted use;

5. Granting the variance will not be materially detrimental to the public welfare or injurious to the property or improvement;

6. No other practicable or reasonable alternative exists;

DRAFT

7. Adverse impacts to critical areas resulting from the proposal are minimized;

8. The decision to grant the variance includes the best available science and gives special consideration to conservation or protection measures necessary to preserve or enhance anadromous fish habitat;

9. The variance is consistent with the additional variance requirements/criteria for the specific critical area impacted, pursuant to MTMC 16.15.400 through 16.15.450; and

10. The granting of the variance is consistent with the general purpose and intent of the City's Comprehensive Plan and adopted development regulations.

C. Process and Procedure.

1. A formal preapplication conference is required per MTMC 16.15.150.

2. An applicant submits a complete application, including all filing requirements and the appropriate fee. The burden of proof shall be on the applicant to bring forth evidence in support of the application and upon which any decision has to be made on the application. The applicant shall include proof of all following criteria:

a. The applicant has avoided impacts and provided mitigation, in accordance with this chapter, to the maximum practical extent;

b. The variance will not adversely impact receiving water quality or quantity;

c. The variance will not adversely impact any functional attribute of the critical area;

d. The variance will not jeopardize the continued existence of species listed by the federal government or the state as endangered, threatened, sensitive, or documented priority species or priority habitats; and

e. The variance is based on the criteria and standards referenced in this chapter.

3. The land use project procedures time line set forth in MTMC 18.05.075 applies, except as otherwise stated in this section.

4. The Director shall review the application and make a determination of completeness and provide public notice, pursuant to MTMC 16.15.140.

5. The Director shall evaluate the proposal's consistency with the criteria and forward a written recommendation to the Hearing Examiner to approve, with or without conditions and any time limits for application or completion of work, or to deny the variance request.

6. A public hearing is held before the Hearing Examiner pursuant to MTMC 18.05.127, Notice of public hearing, and MTMC 18.05.180, Procedures for public hearings.

D. Decision.

1. The Hearing Examiner shall make written findings that the request meets or fails to meet the variance criteria and issue a decision to approve, approve with conditions, or deny the variance, pursuant to MTMC 18.05.190.

2. A final decision shall be rendered within 120 days of the determination of completeness per MTMC 18.05.140.

3. Time Limit. Permits necessary to establish or construct the approved variance shall be applied for and the work completed within one year of the effective date of the Hearing Examiner's decision, unless a different time limit is specified by the Hearing Examiner. Failure to meet the established time limit shall void the variance, unless a time extension is obtained pursuant to MTMC 18.05.165, including a demonstration that the conditions of the site and critical areas have not changed since the approval decision was issued. Knowledge of the expiration date is the responsibility of the applicant.

DRAFT

E. Appeal. An appeal of the final decision shall be consistent with the appeal process, pursuant to MTMC 16.15.385. (Ord. 2811 § 10, 2022; Ord. 2731 § 2 (Exh. A), 2018).

16.15.360 Reasonable use exceptions.

A. Applicability. A reasonable use exception is required when strict adherence to the provisions of this chapter would deny all reasonable use of the subject property as a whole, due to the property's size, topography, or location relative to the critical area and any associated buffer.

1. A reasonable use exception shall only be granted if no other reasonable alternative method of development is provided, subject to review and criteria under this section.

2. The fact that property may be utilized more profitably than allowed based on strict interpretation of this title shall not be an element of consideration in any review of a reasonable use request. Reasonable use exceptions shall not be permitted for the subdivision of land.

B. Application and Filing Requirements.

1. A complete request for reasonable use exception application shall be submitted to include the following information:

a. A land analysis of the surrounding area that evaluates the conditions within a quarter-mile vicinity.

b. A description of the proposed development site, including the entire critical area and the setbacks or buffers as required under this title, whether the critical area is wholly contained on the development site or not;

c. An analysis of the impact that the amount of development proposed, in accordance with all applicable development regulations, would have on the critical area;

d. An analysis of whether any other reasonable use with less adverse impact on the critical area and buffer area, as required, is possible;

e. A design of the project as proposed as a reasonable use so that the development will have the least practicable adverse impact on the critical area;

f. A description and analysis of the modification requested of the minimum requirements of this chapter to accommodate the proposed development;

g. Such other information as may be required by the Director as reasonable and necessary to evaluate the reasonable use respective to the proposed development;

h. The applicant shall address all criteria, pursuant to subsection C or D of this section, as applicable;

i. Any additional materials, studies or reports or previously prepared or issued approvals related to the proposal such as a critical area identification form; critical area report, including mitigation plan, if necessary; and any other related project documents, such as permit applications to other agencies, special studies, and environmental documents prepared pursuant to the State Environmental Policy Act.

2. Burden of Proof. The burden of proof is on the applicant to submit sufficient evidence and information in support of the request on which the decision is to be made.

C. Criteria for Public Agencies and Utilities Reasonable Use Exceptions. If strict application of this chapter would unreasonably prohibit the provision of a public service by a public agency or public utility development proposal, the public entity may be granted an exception subject to meeting all of the following criteria:

1. The application of the critical areas regulations would unreasonably restrict the ability to provide utility services to the public;

DRAFT

2. There is no other practical alternative to the proposed development with less impact on the critical areas;

3. The proposal does not pose an unreasonable threat to the public health or safety on or off the development proposal site and will not be materially detrimental to the property or improvements in the vicinity;

4. The proposal attempts to protect and mitigate impacts to the existing critical area functions and value, consistent with MTMC 16.15.310, Alteration of critical areas, and best available science to the fullest extent possible;

5. Any impacts or alterations permitted to the critical area are the minimum necessary and will be mitigated consistent with relevant mitigation standards in this chapter;

6. The proposal attempts to protect and mitigate, consistent with MTMC 16.15.210 and best available science, the existing critical area functions; and

7. The proposal is consistent with other applicable regulations and standards.

D. Criteria for Private Development and Private Permit Application Reasonable Use Exceptions. The property owner may apply for and be granted a reasonable use exception subject to meeting all of the following criteria:

1. The application of the critical area regulations would deny all reasonable economic use of the property;

2. No other reasonable economic use of the property has less impact on the critical area or buffer;

3. The inability of the applicant to derive reasonable economic use of the property is not the result of a self-created hardship, due to the applicant's actions or that of a previous property owner, after the effective date of this chapter or its predecessor (Ordinance No. 2370), or other actions thereby creating an undevelopable condition;

4. The proposed encroachment into the critical area and/or buffer is the minimum necessary to allow for reasonable economic use of the property and no feasible and reasonable on-site alternative is possible to the activities proposed, considering possible changes in site layout, reductions in density and similar factors, with fewer adverse impacts;

5. The proposed reasonable use will result in minimal impact and/or alteration of the critical areas and/or buffers;

6. Any impacts or alterations permitted to the critical area are mitigated consistent with relevant mitigation standards in this chapter;

7. The proposal attempts to protect and mitigate, consistent with MTMC 16.15.210 and best available science, the existing critical area functions and values to the fullest extent possible;

8. The proposal does not create a health or safety hazard on or off the proposal site or be materially detrimental to the property or improvements in the vicinity; and

9. The proposal is consistent with other applicable regulations and standards.

E. Review and Approval Process.

1. A formal preapplication conference is required, per MTMC 16.15.150.

2. The applicant shall submit an application to include all filing requirements per subsection B of this section and applicable fee.

3. The land use project procedures time line set forth in MTMC 18.05.075 applies, except if otherwise stated in this chapter.

DRAFT

4. The Director shall review the application for completeness, pursuant to meeting all the filing requirements of this section. The Director shall review the complete application for:

a. Consistency with criteria in subsection C or D of this section, as applicable.

b. Adequacy of any reports, studies or other materials submitted.

5. A notice of application shall be issued, pursuant to MTMC 16.15.140.

6. The Director shall evaluate the proposal's consistency with the criteria and forward a written recommendation to the Hearing Examiner to approve or deny the request. The recommendation may include conditions, as are necessary to ensure adequate protection of critical areas from adverse impacts and to ensure conformity with this chapter, including the preparation and implementation of a mitigation and monitoring plan consistent with this chapter, and any time limits for application or completion of work.

7. The Hearing Examiner shall hold a public hearing and provide public notice, pursuant to Chapter 18.05 MTMC.

8. A final decision shall be rendered within 120 days of the determination of completeness, per MTMC 18.05.140.

F. Decision.

1. The Hearing Examiner shall make written findings that the request meets, or fails to meet, the criteria for a reasonable use exception, pursuant to MTMC 18.05.185, that the proposed mitigation is sufficient to protect the critical area, and that strict application of the standards in this chapter would deny all reasonable use of the property.

2. The Hearing Examiner may impose any conditions he or she feels necessary, to ensure that the criteria are met and any impacts adequately mitigated to ensure no net loss to critical area functions and values, and set time limits for making application and completing work.

3. Approval of a reasonable use exception shall not eliminate the need for any other permits or approvals otherwise required by applicable city codes.

G. Time Limits.

1. Any permits necessary to establish or construct the approved reasonable use shall be applied for within one year of the effective date of the Hearing Examiner's decision, unless a different time is approved or required.

2. The approval is automatically null and void if the necessary permit applications to establish the use are not received within the specified time, unless a time extension is obtained pursuant to MTMC 18.05.165, including a demonstration that the conditions of the site and critical areas have not changed since the approval decision was issued. Knowledge of the expiration date is the responsibility of the applicant.

H. Appeal. An appeal of the final decision shall be consistent with the appeal process, pursuant to MTMC 16.15.385. (Ord. 2811 § 11, 2022; Ord. 2731 § 2 (Exh. A), 2018).

16.15.380 Enforcement and penalties.

A. Any responsible party violating any of the provisions of this chapter may be subject to enforcement procedures and penalties of this section and any applicable procedures and penalties, per Chapter 1.15 MTMC, Code Enforcement. Penalties are cumulative. Any developer/owner who violates the provisions of this chapter, or an approved plan, shall incur a civil penalty in the amount of $500.00 per day from the date set for correction, until the violation is corrected.

B. Enforcement. Enforcement shall be pursuant to Chapter 1.15 MTMC. When it is determined that a violation has occurred or is occurring, the City may issue notices of civil violation, and criminal violation, to the person responsible for the violation, per Chapter 1.15 MTMC.

DRAFT

C. Additional Penalties. The penalties of this section are in addition to, and not in lieu of, any other applicable penalties set forth in this chapter, Chapter 1.15, 16.20 or 19.140 MTMC.

1. A square footage cost of $3.00 per square foot of impacted critical area buffer; and

2. A square footage cost of $15.00 per square foot of impacted critical area; and

3. A per tree penalty, in the amount of $1,500 per inch of diameter at breast heigh (DBH) of a non-significant tree and $3,000 per inch of DBH of a significant tree unlawfully cleared, cut, removed or damaged. If the DBH of an unlawfully cleared, cut, removed or damaged tree cannot be established, the diameter of the remaining stump top shall be used. In cases where the stump has been removed, the City will approximate the size of the tree(s) removed based on available evidence. If inadequate evidence as to the size of the tree exists, the City shall assess a minimum $10,000 civil penalty fine for each unlawfully cleared, cut, removed or damaged tree. Fines must be paid within 30 days. A property lien may result from the nonpayment of fines. An appeal shall be governed by procedures outlined in Chapter 1.15 MTMC. and

4. Restoration of impacts to critical areas is required, pursuant to MTMC 16.15.115 and 16.15.330. (Ord. 2805 §§ 4, 7 (Exh. B), 2022; Ord. 2731 § 2 (Exh. A), 2018).

16.15.385 Appeals of critical area decisions.

A. Administrative interpretations and administrative approvals may be appealed, by the applicant or any party of record, to the Hearing Examiner, pursuant to Chapter 2.120 MTMC.

1. Appeals shall be written and shall state the following:

a. The decision being appealed, the name of the project applicant and the date of the decision.

b. The name and address of the person appealing, and his or her interest in the matter.

c. The reasons why the person appealing believes the decision to be in error under the provisions of this chapter.

2. Filing the Appeal. The person appealing shall file the appeal and applicable fee with the Director within 14 calendar days after the date of the decision being appealed.

3. Standards. In deciding the appeal, the Hearing Examiner shall determine whether the critical area decision, pursuant to the appeal, was in error, pursuant to the provisions of this chapter.

B. Decisions by the Hearing Examiner may be appealed, by the applicant or any party of record, pursuant to the judicial appeal process per Chapter 2.120 MTMC and MTMC 18.05.260. (Ord. 2811 § 12, 2022; Ord. 2731 § 2 (Exh. A), 2018).

16.15.390 Fees.

A. Fees for critical area review and processing of applications and other services provided by the city, pursuant to this chapter, apply per the City's adopted fee schedule.

B. The applicant shall be responsible for all costs associated with the initiation, preparation, submission, and expense of all required reports, assessments, studies, plans, reconnaissance, third party review by qualified professionals and any other work prepared in support of or necessary to review and process the application and install, maintain, and monitor critical area work.

C. Performance and maintenance warrantees may be required for restoration, mitigation, and monitoring activities. These are at the sole expense of the applicant. (Ord. 2731 § 2 (Exh. A), 2018).

16.15.400 Wetlands.

A. Wetland Designations.

DRAFT

1. Wetlands are those areas designated in accordance with the approved federal delineation manual and applicable regional supplements as set forth in WAC 173-22-035, consistent with the definition of "wetland" per MTMC 16.15.500. All areas within the City meeting the wetland designation criteria, regardless of any formal identification, are hereby designated critical areas and are subject to the provisions of this chapter.

2. Wetland delineations are valid for five years, subject to MTMC 16.15.200(F).

B. Wetland Classification. Wetland shall be rated according to the Washington State Wetlands Rating System for Western Washington: 2014 Update, Version 2 (Department of Ecology Publication No. 23-06-009 or as revised and approved by Ecology), which contains the definitions and methods for determining whether the criteria below are met. Wetland rating categories shall not be altered to recognize illegal modifications made by the applicant or with the applicant's knowledge. Categories may be modified in accordance with permitted activities.

1. "Category I wetlands" are those wetlands which meet any one of the following criteria:

a. Documented habitat for federal or state listed "endangered" or "threatened" species of plant, animal or fish within the wetland; or

b. High quality native wetland communities listed in, or which qualify for inclusion in, Washington Natural Heritage Program maintained by the state Department of Natural Resources; or

c. Wetlands that are relatively undisturbed and contain ecological attributes that are impossible to replace within a human lifetime; or

d. Wetlands of local significance, as now or hereafter designated by the City of Mountlake Terrace, pursuant to criteria in the Washington State Wetland Rating System for Western Washington; or

e. Wetlands that provide a high level of function with a score of 23 points or more based on the wetland rating system.

2. "Category II wetlands" are those wetlands which are not Category I wetlands and which meet any one of the following criteria:

a. A documented habitat for federal or state listed "candidate" or "sensitive" species of plant, animal or fish species within the wetland; or

b. Wetlands that contain "priority" species or habitats documented by the Washington Department of Wildlife Priority Habitat and Species program; or

c. Wetlands with significant functions, as determined by the required wetland report, which may not be adequately replicated through creation or restoration; or

d. Wetlands with a moderately high level of functions scoring between 20 and 22 points; or

e. Wetlands of local significance, as now or hereafter designated by the City of Mountlake Terrace.

3. "Category III wetlands" are those wetlands that do not satisfy Category I, II or IV criteria, with a moderate level of functions scoring between 16 and 19 points, have generally been disturbed in some ways, and are often less diverse or more isolated from other natural resources in the landscape than Category II wetlands.

4. "Category IV wetlands" are those wetlands which have the lowest levels of function with scores below 16 points and are often heavily disturbed. These are wetlands that should be able to be replaced or in some cases improved.

C. "Artificially created wetlands" are wetlands as defined in MTMC 16.15.500. Such wetlands, except for those created as mitigation or previously modified for approved land use activities, are excluded from regulation under this section; provided, that their purposeful creation is demonstrated to the Department through documentation, photographs, statements and/or other evidence.

DRAFT

D. Mapping. The approximate location and extent of wetlands are shown on the adopted critical areas maps, pursuant to MTMC 16.15.080. The exact location of a wetland's boundary and classification shall be determined through field investigation by a qualified professional applying the applicable manuals adopted by this chapter.

E. Allowed Activities and Uses in Wetlands and Wetland Buffers.

1. Activities that are regulated in critical areas, pursuant to MTMC 16.15.090, apply to wetlands and wetland buffers.

2. In general, activities and uses shall be prohibited in wetlands and wetland buffers, except as otherwise provided for in this subsection, and in subsection (D)(6) of this section. When applicable, exempt activities per MTMC 16.15.100, emergencies per MTMC 16.15.110, variances per MTMC 16.15.350, and reasonable use exceptions per MTMC 16.15.360 are permitted.

3. Category I Wetlands. Activities and uses shall be prohibited from Category I.

4. Category II and III Wetlands. Activities and uses proposed in Category II and III wetlands are subject to the following standards together with any other applicable standards:

a. Water-dependent activities may be allowed where there are no practicable alternatives that would have a less adverse impact on the wetland, its buffers, and other critical areas.

b. Where non-water-dependent activities are proposed, it shall be presumed that alternative locations are available, and activities and uses shall be prohibited, unless the applicant demonstrates that:

i. The basic project purpose cannot reasonably be accomplished and successfully avoid, or result in less adverse impact on, a wetland on another site or sites in the general region; and

ii. All alternative designs of the project as proposed that would avoid or result in less of an adverse impact on a wetland or its buffer, such as a reduction in the size, scope, configuration, or density of the project, are not feasible.

c. Full compensation for the loss of acreage and functions and values of wetland and buffers due to unavoidable impacts shall be provided in compliance with the mitigation performance standards and requirements of this chapter.

5. Category IV Wetlands. Activities and uses that result in unavoidable and necessary impacts may be permitted in Category IV wetlands and associated buffers in accordance with an approved critical area report per MTMC 16.15.200, and with MTMC 16.15.210 through 16.15.240, as applicable, and only if the proposed activity is the only reasonable alternative that will accomplish the applicant's objectives.

a. All Category IV wetlands less than 4,000 square feet that:

i) Are located in the areas covered by the Regional Supplement to the Corps of Engineers Wetland Delineation Manual: Western Mountains, Valleys, and Coast Region (U.S. Army Corps of Engineers, 2010)

ii.)Are not associated with riparian areas or their buffers

iii.)Are not associated with shorelines of the state or their associated buffers

iv.)Are not part of a wetland mosaic

v.)Do not score 6 or more points for habitat function based on the Washington State Wetland Rating System for [Western or Eastern] Washington: 2014 Update (Ecology Publication [#14-06-029 or #14-06-030]), or as revised by Ecology)

DRAFT

vi.)Do not contain a Priority Habitat or a Priority Area for a Priority Species identified by the Washington Department of Fish and Wildlife and do not contain state or federally listed species or their critical habitat or species of local importance identified in the City code

b. Wetlands less than 1,000 square feet that meet the above criteria are exempt from the buffer provisions contained in this Chapter."

6. Exemptions and Allowed Activities – Wetlands. The activities listed below are allowed in wetlands and wetland buffers in addition to those activities listed in and consistent with the provisions in the MTMC 16.15.100 and 16.15.110. These activities do not require a critical area report, except where such activities result in a loss to the functions and values of a wetland or wetland buffer. Additional exceptions may be granted by variance or reasonable exception use pursuant to MTMC 16.15.350 or 16.15.360.

a. Conservation or enhancement of a wetland, or preservation of soil, water, vegetation, fish and other wildlife, that does not entail changing the structure or functions of the existing wetland, including removal of noxious weeds or invasive species pursuant to MTMC 16.15.115.

b. The harvesting of wild crops in a manner that is not injurious to natural reproduction of such crops and provided the harvesting does not require tilling of soil, planting of crops, chemical applications, or alteration of the wetland by changing existing topography, water conditions, or water sources.

c. Drilling for utilities/utility corridors under a wetland; with entrance/exit portals located completely outside of the wetland buffer, provided, that the drilling does not alter the ground water connection to the wetland or percolation of surface water down through the soil column. Specific studies by a hydrologist are necessary to determine whether the ground water connection to the wetland or percolation of surface water down through the soil column could be disturbed.

d. Allowed uses in wetland buffers are pursuant to MTMC 16.15.400(F)(2).

7. Subdivisions. The subdivision and/or short subdivision of land that contains wetlands and associated buffers are subject to the following:

a. Land that is located wholly within a wetland or its buffer may not be further subdivided; and

b. Land that is located partially within a setland or its buffer may be subdivided; provided, that an accessible and contiguous portion of each new lot is located outside of the wetland and its buffer; and the lot can meet the minimum size requirements as provided for and allowed in MTMC Titles 17 and 19.

F. Critical Area Report Requirements – Wetlands.

1. Wetland boundaries must be staked and flagged in the field by a qualified consultant employing the federal methodology. Field flagging must be distinguishable from other survey flagging on the site. The field flagging must be accompanied by a wetland delineation report.

2. Wetland critical area reports shall be prepared by a qualified wetland professional. Critical area reports shall be consistent with MTMC 16.15.200 and this section. The area covered by the report shall include:

a. The project area of the proposed activity;

b. All wetlands and applicable buffers within 300 feet of the project area; and

c. All shoreline areas, water features, floodplains, and other critical areas per City inventory map(s) per MTMC 16.15.080, and as designated on a National Wetland Inventory Map (U.S. Fish and Wildlife Service);

3. Wetland Analysis. In addition to the minimum report filing requirements set forth in MTMC 16.15.200(D), the report shall also contain an analysis of the wetlands to include the following site and proposal related information:

DRAFT

a. A written assessment and accompanying maps of the wetlands and buffers within 200 feet of the project area, including the following information, at a minimum:

i. Wetland delineation and required buffers;

ii. Existing wetland acreage;

iii. Wetland category;

iv. Vegetative, faunal, and hydrologic characteristics;

v. Soil and substrate conditions;

vi. Topographic elevations;

v. Delineation methodology, with special emphasis on whether the approach used was routine, intermediate, or comprehensive, as described in the federal manual;

vii. Specific descriptions of plant communities, soils, and hydrology;

vii.. A summary of existing wetland function and value; and

ix. If on-site wetland re-creation/rehabilitation is proposed, include a discussion of the water sources supplying the wetland and documentation of hydrologic regime (locations of inlet and outlet features, water depths throughout the wetland, evidence of recharge or discharge, evidence of water depths throughout the year – drift lines, algal layers, moss lines, and sediment deposits).

b. A summary of proposed wetland and buffer alterations, impacts, and the need for the alterations as proposed. Potential impacts may include but are not limited to loss of flood storage potential, loss of wildlife habitat, expected decreases in species diversity or quantity, changes in water quality, increases in human intrusion, and impacts on associated wetland or water resources.

c. A discussion of measures, including avoidance, minimization, and mitigation, proposed to preserve existing wetlands and restore any wetlands that were degraded prior to the current proposed land use activity.

d. A habitat and native vegetation conservation strategy that addresses methods to protect and enhance on-site habitat and wetland functions.

e. Functional evaluation for the wetland and adjacent buffer citing the method and including all data sheets from the federal manual, numbered to correspond with sample site locations as staked and flagged in the field.

f. Proposed mitigation, if needed, including a written assessment and accompanying maps of the mitigation area including, at a minimum, any of the following information not already required by a mitigation plan per MTMC 16.15.220:

i. Existing and proposed wetland acreage;

ii. Vegetative and faunal conditions;

iii. Surface and subsurface hydrologic conditions including an analysis of existing and future hydrologic regime and proposed hydrologic regime for enhanced, created, or restored mitigation areas;

iv. Relationship within watershed and to existing waterbodies;

v. Soil and substrate conditions, topographic elevations;

vi. Existing and proposed adjacent site conditions;

DRAFT

vii. Required wetland buffers (including any buffer reduction and mitigation proposed to increase the plant densities, remove weedy vegetation, and replant the buffers);

viii. Property ownership; and

ix. Associated wetlands and related wetlands that may be greater than 200 feet from the subject project.

g. A scale map of the development proposal site and adjacent area. A discussion of ongoing management practices that will protect wetlands after the project site has been developed, including proposed monitoring and maintenance programs.

h. A guarantee estimate for the installation (including site preparation, plant materials and installation, fertilizers, mulch, stakes) and the proposed monitoring and maintenance work for five years, unless a different number of years is recommended by the qualified professional or specified by the Director before or after submittal of report.

4. A notice on title applies, pursuant to MTMC 16.15.250.

5. Nothing in this section limits the authority of the Director to request additional information deemed necessary before, during, or after review of the report contents.

6. The Director may require third party review, pursuant to MTMC 16.15.200(G).

G. Wetland Buffers and Setbacks.

1. The general purpose and provisions applicable to wetland buffers and setbacks are subject to the provisions in MTMC 16.15.040, unless otherwise provided for in this section.

2. Wetland Buffer Uses. The following uses may be permitted within a wetland buffer in accordance with the review procedures of this chapter; provided, they are not prohibited by any other applicable law and conducted in a manner to minimize impacts to the buffer and adjacent wetland:

a. All activities and uses as defined in this section;

b. Conservation and/or restoration activities aimed at protecting the soil, water, vegetation, or wildlife;

c. Passive Recreation. Passive recreation facilities designed and in accordance with an approved critical area report, including walkways and trails consistent with MTMC 16.15.100(B)(13). The Director may allow trails within the inner 25 percent of wetland buffers when required to provide access to wildlife viewing structures, fishing access areas, or connections to other trail facilities, wildlife viewing structures, and fishing access areas down to the water's edge that should be no larger than six feet; and

d. Low impact uses may be permitted within the additional building setback per the Wetland Buffer Requirements table in subsection (F)(3) of this section. Examples of such uses include utilities, recreation, and temporary construction staging required for such uses; provided, that any building or structure shall not be of such size, individually or cumulatively, as to require issuance of a building permit.

3. Wetland Buffer Widths – Standards.

a. The buffer widths in this section have been established in accordance with best available science. The buffer widths assume that the buffer is vegetated with a native plant community appropriate for the ecoregion. If the existing buffer is unvegetated, sparsely vegetated, or vegetated with invasive species that do not perform needed functions, the buffer shall either be planted to create the appropriate plant community or the buffer shall be widened by 33 percent to ensure that adequate functions of the buffer are provided. Lawns, walkways, driveways, and other mowed or paved areas are not considered to be buffers.

DRAFT

i. To meet vegetative buffer standards, the wetland buffer must contain at least an average of 80 percent native plant cover, and noxious weed cover cannot exceed 10 percent. The native cover must include tree, shrub and groundcover strata in proportions that mimic native forest.

b. Wetland buffers shall be measured perpendicular from the wetland edge as delineated and marked in the field using U.S. Army Corps of Engineers Wetlands Delineation Manual (1987) and applicable regional supplements.

c. Wetland buffer widths shall be established according to Table 1:

Wetland Buffer Widths (in Feet)
Table 1

Wetland Category	**Mitigated Buffer[1] (With** Minimization Measures and habitat corridor)			**Standard buffer (Without** Minimization Measures and habitat corridor)			***Additional Building Setback from Buffer***
	Habitat Score			**Habitat Score**			
	Low *(3 – 5)*	***Moderate*** *(6 – 7)*	***High*** (8-9)	***Low*** *(3 – 5)*	***Moderate*** *(6 – 7)*	***High*** (8-9)	***All Habitat Scores***
1	75	110	225	100	150	300	15
2	75	110	225	100	150	300	10
3	60	110	225	80	150	300	5
4	40			50			0
Artificial	As required						

[1] The use of the mitigated buffer widths requires the implementation of the measures in subsection (F)(4) of this section, where applicable, to minimize the impacts of the land uses adjacent to the wetland or buffer, in addition to any other applicable requirements.

4. Measures to Minimize Impacts to Wetlands.. The mitigated buffer widths in the Mitigated Buffer column in Table 1 assume implementation of the as many of the following measures as applicable and practical to minimize impacts from disturbances:

Mitigation for Disturbance
Table 2

Disturbance	**Required Measures to Minimize Impacts**
Lights	• Direct lights away from wetland
Noise	• Locate activity that generates noise away from wetland • If warranted, enhance existing buffer with native vegetation plantings adjacent to noise source • For activities that generate relatively continuous, potentially disruptive noise, such as certain heavy industry or mining, establish an additional 10 feet heavily vegetated buffer strip immediately adjacent to the outer wetland buffer
Toxic Runoff	• Route all new, untreated runoff away from wetland while ensuring wetland is not dewatered • Establish covenants limiting use of pesticides within 150 feet of wetland • Apply integrated pest management
Stormwater Runoff	• Retrofit stormwater detention and treatment for roads and existing adjacent development • Prevent channelized flow from lawns that directly enters the buffer • Use low impact development (LID) techniques (per City's approved stormwater manual). Follow LID Minimum Requirement No. 8 (Wetlands Protection) for management of any stormwater discharging to a wetland

DRAFT

Disturbance	Required Measures to Minimize Impacts
Change in Water Regime	• Infiltrate or treat, detain, and disperse into buffer new runoff from impervious surfaces and new lawns
Pets and Human Disturbance	• Use privacy fencing or plant dense vegetation to delineate buffer edge and to discourage disturbance using vegetation appropriate for the eco-region • Place wetland and its buffer in a separate tract or protect with a conservation easement
Dust	• Use best management practices to control dust
Disruption of Corridors or Connections	• Maintain connections to off-site areas that are undisturbed • Restore corridors or connections to off-site habitats by replanting

5. Conditions for implementing wetland buffer width standards

a. Wetlands that score 6 points or more for habitat function: the mitigated buffers in Table 1 can be used only if all of the following criteria are met:

i. A relatively undisturbed, vegetated corridor at least 100 feet wide is protected between the wetland and:

(A) A legally protected, relatively undisturbed and vegetated area (e.g., Priority Habitats, compensatory mitigation sites, wildlife areas/refuges, national, county, and state parks where they have management plans with identified areas designated as Natural, Natural Forest, or Natural Area Preserve, or

(B) An area that is the site of a Watershed Project identified within, and fully consistent with, a Watershed Plan as defined by RCW 89-08-460, or

(C) An area where development is prohibited according to the provisions of the local shoreline master program, or

(D) An area with equivalent habitat quality that has conservation status in perpetuity, in consultation with WDFW.

ii. The corridor is permanently protected for the entire distance between the wetland and the shoreline or legally protected area by a conservation easement, deed restriction, or other legal site protection mechanisms.

iii. Presence or absence of the shoreline or Priority Habitat must be confirmed by a qualified biologist or Shoreline Administrator.

iv. The measures in Table 2 are implemented, as applicable, to minimize the impacts of the adjacent land uses.

b. For wetlands that score 5 or fewer habitat points, only the measures in Table 2 are required for the use of the mitigated buffers in Table 1.

c. If an applicant does not apply the mitigation measures in Table 2 or is unable to provide a protected corridor, then the standard buffers in Table 1 shall be used.

d. For interrupted buffer regulations, see MTMC 16.15.100(B)(5).

e. Legally established buffer. Where a buffer has been previously established on a legally created parcel or tract that was legally established according to the regulations in place at the time of establishment and is permanently recorded on title or placed within a separate tract, and the parcels that are included on the plat at the time of recording of the subject parcel or tract, then the buffer shall remain as previously established, provided:

DRAFT

i. It is equal to or greater than 50 percent of the required standard buffer distance for the applicable stream category; and

ii. Meets vegetative buffer standards above; and

iii. Impact minimization measures are applied.

f. Where wetland functions have been improved due to voluntary implementation of an approved stewardship, restoration and/or enhancement plan that is not associated with required mitigation or enforcement, the wetland buffer width shall be determined based on the previously established wetland category and habitat score as documented in the approved stewardship and enhancement plan.

6. Building Setbacks from Wetland Buffers.

a. Unless otherwise provided, buildings and other structures shall be set back from the edge of the wetland buffer per the table in subsection (F)(3)(c) of this section, or from the edges of all critical areas, if no buffers are required.

b. The following may be allowed in the wetland building setback area:

i. Building overhangs, if such overhangs do not extend more than 24 inches into the setback area; and

ii. Impervious ground surfaces, such as driveways and patios; provided, that such improvements may be subject to water quality regulations, pursuant to City stormwater regulations.

7. Increased Wetland Buffer Widths.

a. An increase in the required buffer widths shall be provided, as determined by the Director, based on the recommendations of an experienced, qualified professional wetland scientist on a case-by-case basis when a larger buffer is necessary to protect wetland functions and values based on site-specific characteristics. This determination shall be based on one or more of the following criteria:

i. A larger buffer is needed to protect critical areas other than the wetland; or

ii. The buffer or adjacent uplands has a slope greater than 15 percent or is susceptible to erosion and standard erosion-control measures will not prevent adverse impacts to the wetland; or

iii. Slopes greater than 30% require an increased wetland buffer by 50%; or

iv. The wetland and/or buffer is occupied by a federally listed threatened or endangered species, a bald eagle nest, a great blue heron rookery, or a species of local importance; and it is determined that an increased buffer width is necessary to protect the species; or

v. The existing buffer vegetation is considered inadequate because the buffer area has minimal vegetative cover or is composed of nonnative vegetation, lawn, or bare ground.

b. At the discretion of the Director, the buffer width may be increased to ensure that adequate functions of the buffer are provided or an applicant may be required to develop and implement a wetland buffer enhancement plan. Where a buffer enhancement planting plan is proposed, it shall, unless otherwise recommended by a qualified professional, include (as appropriate):

i. Removal of nonnative plants when nonnative or invasive plant species provide the dominant cover;

ii. Native plant planting densities of no less than three feet on center for shrubs and eight feet on center for trees; and

iii. A monitoring and maintenance plan to ensure success.

DRAFT

8. Buffer Averaging

a. The Director may allow modification of a wetland buffer width consistent with an approved critical areas report. Wetland buffers widths may be modified by averaging buffer widths or by enhancing buffer quality when consistent with the criteria in this section. The activity or use shall be mitigated to achieve no net loss of wetland area or functions consistent with this section and other applicable provisions of this chapter.

b. Buffer width averaging with buffer enhancement may be allowed where a qualified professional demonstrates to the Department that:

i. The wetland contains variations in sensitivity due to existing physical characteristics or the character of the buffer varies in slope, soils, or vegetation, and the wetland would benefit from a wider buffer in places and would not be adversely impacted by a narrower buffer in other places;

ii. That averaging will not reduce wetland functions or values;

iii. The total area contained within the buffer after averaging shall be no less in area than contained within the standard buffer prior to averaging;

iv. The required building setback shall not be included in the area used to calculate buffer averaging;

v. The buffer width is not reduced to less than 75 percent of the standard width at any location; and

vi. The buffer averaging and enhancement plan provides evidence that wetland functions and values will be:

(A) Increased or retained through plan implementation for those wetlands where existing buffer vegetation is generally intact; or

(B) Increased through plan implementation for those wetlands where existing buffer vegetation is inadequate to protect the functions and values of the wetland.

9. Functionally disconnected buffers may be appropriate to exclude from regulated buffers per MTMC 16.15.100(B)(5).

H. Alteration of Wetlands. Alteration of wetlands or their established buffers may be permitted through a reasonable use exception subject to MTMC 16.15.306, a variance subject to MTMC 16.15.350, or by an exempt activity pursuant to MTMC 16.15.100.

I. Compensatory Mitigation - Wetland Mitigation Ratios.

1. Where wetland alterations are permitted by the Hearing Examiner, the applicant shall mitigate impacted areas of wetlands to compensate for losses. The mitigation shall be determined according to acreage, function, type, location, timing factors, and projected success of the mitigation. The ratios in the Wetland Mitigation Ratios tables apply.

Wetland Mitigation Ratios
Compensation ratios for permanent impacts[1,2,3]

Category of impacted wetland (based on score for function)	Reestablishment or creation	Rehabilitation	Preservation	Enhancement
Category I	4:1	8:1	16:1	16:1
Category II	3:1	6:1	12:1	12:1
Category III	2:1	4:1	8:1	8:1

DRAFT

Category IV	1:5:1	3:1	6:1	6:1

[1] Ratios for rehabilitation, preservation, and enhancement may be reduced when combined with 1:1 replacement through re-establishment or creation. See Table 6B-2 in Wetland Mitigation in Washington State – Part 1: Agency Policies and Guidance –Version 2 (Ecology et al., 2021 or as revised).

[2] All proposed preservation sites need to meet the preservation criteria listed in MTMC 16.15.400(H)(2)(iii)

[3] The ratios provided are for permanent, direct impacts to wetlands. For recommended ratios for other types of impacts (e.g., long-term temporary, conversions), see Chapters 6B4.4 through 6B4.8 of Wetland Mitigation in Washington State – Part 1: Agency Policies and Guidance –Version 2 (Ecology et al., 2021 or as revised).

1. Mitigation for wetland and buffer impacts shall rely on a method listed below in order of preference. A lower-preference form of mitigation shall be used only if the applicant's qualified wetland professional demonstrates to the Hearing Examiner's satisfaction that all higher ranked types of mitigation are not viable, consistent with the criteria in this Section.

    a. Restoration: The manipulation of the physical, chemical, or biological characteristics of a site with the goal of returning natural/historic functions and environmental processes to a former or degraded wetland. Restoration is divided into two categories:

        (A) Re-establishment: The manipulation of the physical, chemical, or biological characteristics of a site with the goal of returning natural/historic functions and environmental processes to a former wetland. Re-establishment results in rebuilding a former wetland and results in a gain in wetland area and functions. Example activities could include removing fill, plugging ditches, or breaking drain tiles to restore a wetland hydroperiod, which in turn will lead to restoring wetland biotic communities and environmental processes.

        (B) Rehabilitation: The manipulation of the physical, chemical, or biological characteristics of a site with the goal of repairing natural/historic functions and environmental processes to a degraded wetland. Rehabilitation results in a gain in wetland function but does not result in a gain in wetland area. The area already meets wetland criteria, but hydrological processes have been altered. Rehabilitation involves restoring historic hydrologic processes. Example activities could involve breaching a dike to reconnect wetlands to a floodplain or return tidal influence to a wetland.

    b. Establishment or creation: The manipulation of the physical, chemical, or biological characteristics of a site to develop a wetland on an upland where a wetland did not previously exist at an upland site. Establishment results in a gain in wetland area and functions. An example activity could involve excavation of upland soils to elevations that will produce a wetland hydroperiod and hydric soils by intercepting groundwater, and in turn supports the growth of hydrophytic plant species.

        (A) If a site is not available for wetland restoration to compensate for expected wetland and/or buffer impacts, the Hearing Examiner may authorize establishment of a wetland and buffer upon demonstration by the applicant's qualified wetland professional that:

            (A) The hydrology and soil conditions at the proposed mitigation site are conducive for sustaining the proposed wetland and that establishment of a wetland at the site will not likely cause hydrologic problems elsewhere;

            (B) Adjacent land uses and site conditions do not jeopardize the viability of the proposed wetland and buffer (e.g., due to the presence of invasive plants or noxious weeds, stormwater runoff, noise, light, or other impacts); and

DRAFT

(C) The proposed wetland and buffer will eventually be self-sustaining with little or no long-term maintenance.

(D) The proposed wetland would not be established at the cost of another high-functioning habitat (i.e., ecologically important uplands).

c. Preservation (Protection/Maintenance). The removal of a threat to, or preventing the decline of, wetlands by an action in or near those wetlands. This term includes activities commonly associated with the protection and maintenance of wetlands through the implementation of appropriate legal and physical mechanisms such as recording conservation easements and providing structural protection like fences and signs. Preservation does not result in a gain of aquatic resource area or functions but may result in a gain in functions over the long term. Preservation of a wetland and associated buffer can be used only if:

(A) The Hearing Examiner determines that the proposed preservation is the best mitigation option;

(B) The proposed preservation site is under threat of undesirable ecological change due to permitted, planned, or likely actions that will not be adequately mitigated under existing regulations;

(C) The area proposed for preservation is of high quality or critical for the health and ecological sustainability of the watershed or sub-basin. Some of the following features may be indicative of high-quality sites:

(A) Category I or II wetland rating (per 020.B of this Section).

(B) Rare or irreplaceable wetland type [e.g, peatlands, mature forested wetland, estuaries, vernal pools, alkali wetlands] or aquatic habitat that is rare or a limited resource in the area.

(C) The presence of habitat for threatened or endangered species (state, federal, or both).

(D) Provides biological and/or hydrological connectivity to other habitats.

(E) Priority sites identified in an adopted watershed plan.

(D) Permanent preservation of the wetland and buffer shall be provided through a legal mechanism such as a conservation easement or tract held by an appropriate natural land resource manager/land trust.

(E) The Hearing Examiner may approve another legal and administrative mechanism in lieu of a conservation easement if it is determined to be adequate to protect the site.

d. Enhancement. The manipulation of the physical, chemical, or biological characteristics of a wetland to heighten, intensify, or improve specific wetland function(s). Enhancement is undertaken for specified purposes such as water quality improvement, flood water retention, or wildlife habitat. Enhancement results in the gain of selected wetland function(s) but may also lead to a decline in other wetland function(s). Enhancement does not result in a gain in wetland area. Enhancement activities could include planting vegetation, controlling non-native or invasive species, and modifying site elevations to alter hydroperiods in existing wetlands.

Applicants proposing to enhance wetlands and/or associated buffers shall demonstrate how the proposed enhancement will increase the wetland and/or buffer functions, how this increase in function will adequately compensate for the impacts, and how existing wetland functions at the mitigation site will be protected.

DRAFT

e. Alternative Types of Mitigation/Resource Tradeoffs. The Hearing Examiner may approve alternative mitigation proposals that are based on best available science, such as priority restoration plans that achieve restoration goals identified in the SMP. Alternative mitigation proposals shall provide an equivalent or better level of ecological functions and values than would be provided by standard mitigation approaches. Alternative mitigation approaches shall comply with all reporting, monitoring, and performance measures of this Section including adherence to mitigation sequencing. The City may consult with agencies with expertise and jurisdiction over the critical areas during the review to assist with analysis and identification of appropriate performance measures that adequately safeguard critical areas.

The Hearing Examiner will consider the following for approval of an alternative mitigation proposal:

(A) Clear identification of how an alternative approach will achieve equal or better ecological benefit.

(B) The proposal uses a watershed approach consistent with Selecting Wetland Mitigation Sites Using a Watershed Approach [Western Washington or Eastern Washington (Ecology Publication #09-06-32 or Publication #10-06- 007), or as revised].

(C) All impacts are identified, evaluated, and mitigated.

(D) Methods to demonstrate ecological success are clear and measurable.

.J. Compensatory Mitigation - Credit-Debit Method. Mitigation requirements may also be determined using the credit-debit tool described in “Calculating Credits and Debits for Compensatory Mitigation in Wetlands of Western Washington: Final Report, March 2012” (Ecology Publication No. 10-06-011, March 2012, or as revised). The credit-debit method may be used in place of standard Wetland Mitigation Ratios described in MTMC 16.15.400(H).

K. Mitigation. Mitigation, when applicable or required, shall be implemented consistent with mitigation sections MTMC 16.15.210 through 16.15.240, and any other applicable mitigation provision in this section.

Mitigation projects should be completed prior to activities that will disturb wetlands. At the very least, mitigation shall be completed immediately following disturbance and prior to use or occupancy of the action or development. Construction of mitigation projects shall be timed to reduce impacts to existing fisheries, wildlife, and flora.

L. Wetland Protection. Protective covenants shall be provided, pursuant to MTMC 16.15.250 and 16.15.270. (Ord. 2747 § 4, 2019; Ord. 2731 § 2 (Exh. A), 2018).

16.15.420 Fish and Wildlife Habitat Conservation Areas.

Fish and wildlife habitat conservation areas are areas that serve a critical role in sustaining needed habitats and species for the functional integrity of the ecosystem, and which, if altered, may reduce the likelihood that the species will persist over the long term. These areas may include, but are not limited to, rare or vulnerable ecological systems, communities, and habitat or habitat elements including seasonal ranges, breeding habitat, winter range, and movement corridors; and areas with high relative population density or species richness. "Fish and wildlife habitat conservation areas" does not include such artificial features or constructs as irrigation delivery systems, irrigation infrastructure, irrigation canals, or drainage ditches that lie within the boundaries of, and are maintained by, a port district or an irrigation district or company.

A. Applicability.

1. To promote consistent application of the standards and requirements of this chapter, fish and wildlife habitat conservation areas within the City of Mountlake Terrace shall be classified according to their characteristics, function and value, and/or their sensitivity to disturbance. Classification of wildlife habitat shall be determined by the Department based on consideration of the following factors and in the following order:

DRAFT

a. Consideration of the technical reports submitted by qualified professionals in connection with applications subject to these regulations;

b. Application of the criteria contained in this section; and

c. Maps adopted pursuant to this chapter, and Washington Department of Fish and Wildlife (WDFW) priority habitat maps.

2. Fish and Wildlife Habitat Conservation Areas Classification. Fish and wildlife habitat conservation areas shall be classified according to the criteria in this section.

a. Areas where endangered, threatened, sensitive, and candidate species have a primary association

b. Habitats and species of local importance, as determined locally

c. Naturally occurring ponds under 20 acres and their submerged aquatic beds that provide fish or wildlife habitat

d. Waters of the state

e. Lands, ponds, streams, and rivers planted with game fish by a government or tribal entity

f. Stream types F, Np, Ns

f. State natural area preserves, natural resource conservation areas, and state wildlife areas

g. Shown on WDFW priority habitat maps and/or listed

h. Land essential for preserving connections between habitat blocks and critical areas, such as wildlife habitat networks or corridors

B. Buffers and Setbacks from Wildlife Habitat.

1. General Provisions.

a. Buffer widths for priority habitat areas shall be determined by the Department based on consideration of the following factors:

i. The Department may require a buffer for habitats and species based on its own expertise or third-party review. The Department may also allow minimization and conservation measures, habitat retention, mitigation, or corridors in lieu or in addition to buffers depending on the specific species.

ii. Species recommendations of the WDFW, based on consideration of published species-specific information and consultation with the Department

iii. Recommendations contained in the wildlife study submitted by a qualified professional, following the reporting requirements of these regulations; and

iv. The nature and intensity of land uses and activities occurring on the site and on adjacent sites.

b. Wildlife habitat buffer widths may be modified by averaging buffer widths or by enhancing or restoring buffer quality, pursuant to scientific analysis that the functions and values of the wildlife habitat will be retained or enhanced. Buffer averaging is not permitted for stream buffers.

b. Certain uses and activities which are consistent with the purpose and function of the habitat buffer, and do not detract from its integrity, may be permitted by the Department within the buffer depending on the sensitivity of the habitat area. Examples of uses and activities with minimal impact, which may be

DRAFT

permitted in appropriate cases, include permeable pedestrian trails and viewing platforms, and utility easements; provided, that any impacts to the buffer resulting from permitted facilities shall be mitigated. When permitted, such facilities shall be located in the outer 10 feet of the buffer.

c. Functionally disconnected buffers may be appropriate to exclude from regulated buffers per MTMC 16.15.100(B)(5).

C. Critical Area Report Requirements – Fish and Wildlife Habitat Conservation Areas. The purpose of the report is to determine the extent, function and value of wildlife habitat on any site where regulated activities are proposed. The report will also be used by the City to determine the sensitivity and appropriate classification of the habitat or stream rating designation, appropriate buffering requirements, and potential impacts of proposed activities. The information required by this report should be coordinated with the study and reporting requirements for any other sensitive area located on the site.

In addition to the general critical area report requirements of MTMC 16.15.200, critical area reports must meet the requirements of this section.

For streams, the edge of the channel migration zone; ordinary high water mark; top of the stream bank; or stream centerline (in order of preference as data is available) shall be flagged in field by a qualified professional. Field flagging must be distinguishable from other survey flagging on the site. The field flagging must be accompanied by a Critical Area Report.

1. The report shall include the following information:

a. Vicinity map;

b. The site designated on the City's Critical Area Map

c. A map at an appropriate engineering scale such that information shown is not cramped or illegible. Generally, a scale of one inch equals 40 feet or greater (such as one inch equals 20 feet) should be used. Existing features must be distinguished from proposed features. The map must show:

i. Site boundary property lines and roads;

ii. Internal property lines, rights-of-way, easements, etc.;

iii. Existing physical features of the site including buildings, fences, and other structures, roads, parking lots, utilities, water bodies, etc.;

iv. Contours at the smallest readily available intervals, preferably at five-foot intervals;

v. For large and/or complex projects, an air photo with overlays displaying the site boundaries and wetland delineation may be required. Generally, an orthophotograph at a scale of one inch equals 400 feet or greater (such as one inch equals 200 feet) should be used. If an orthophotograph is not available, the center of a small scale (e.g., one inch equals 2,000 feet) aerial photograph enlarged to one inch equals 400 feet may be used;

vi. A map of vegetative cover types, reflecting the general boundaries of different plant communities on the site;

vii. A description of the species typically associated with the cover types, including an identification of any critical wildlife species that might be expected to be found and habitat corridors that might connect these species;

viii. The results of searches of DNR's Natural Heritage and Non-Game Data System databases; and

ix. The result of searches of the WDFW Priority Habitat and Species database.

DRAFT

x. For streams, the map shall show:

(A) Approximate locations of all streams on the property;

(B) Hydrologic mapping showing patters of water movement into, through, and out of the site area

d. The report must describe:

i. Locational information including legal description and address;

ii. All natural and manmade features within 150 feet of the site boundary;

iii. General site conditions including topography, acreage, and hydrology, water bodies or wetlands;

iv. Identification of any areas that have previously been disturbed or degraded by human activity or natural processes;

v. The layers, diversity and variety of habitat found on the site;

vi. Identification of edges between habitat types and any species commonly associated with that habitat;

vii. The location of any migration or movement corridors; and

viii. A narrative summary of existing habitat functions and values. The analysis shall use a habitat evaluation procedure or methodology approved by the department.

ix. Reports for streams must include:

(A) Specific descriptions of streams, including gradient and flow characteristics, stream bed condition, stream bank and slope stability, presence of fish or habitat for fish, presence of obstructions to fish movement, general water quality, and stream bank vegetation;

(B) A summary of existing stream value for fisheries habitat;

(C) Where degraded streams and stream buffers occur, provide a restoration plan for degraded areas.

e. A summary of proposed habitat and buffer alterations, impacts and mitigation, and the need for alterations as proposed. Potential impacts may include but are not limited to clearing of vegetation, fragmentation of wildlife habitat, expected decreases in species diversity or quantity, changes in water quality, increases in human intrusion, and impacts on wetlands or water resources such as stream bed and stream bank alterations and alterations of fisheries habitat.

f. The level of detail contained in the report shall generally reflect the size and complexity of the proposal and the function and value of the habitat. The Department may require field studies in appropriate cases.

D. Alteration of Wildlife Habitat Areas.Alterations shall be avoided, subject to the reasonable use and/ or variance provisions of this chapter.

E. Streams.

1. Classification and Rating of Streams. Streams shall be classified pursuant to WAC 222-16-030, Water typing system. When more than one stream type is present on a subject property (e.g., the stream changes character in short alternating segments), it will be classified according to the stream class present along the majority of the length within a given section. The stream class shall change at the point at which the majority of the length receives a different classification.

DRAFT

The waters will be classified using the following criteria:

Water Type Classifications using DNR's water typing system	
Type	**Description**
Type S (Shoreline)	All waters, within their bankfull width, as inventoried as "shorelines of the state" under chapter 90.58 RCW and the rules promulgated pursuant to chapter 90.58 RCW including periodically inundated areas of their associated wetlands. MTMC 16.10 regulations apply.
Type F (Fish)	Segments of natural waters other than Type S Waters, which are within the bankfull widths of defined channels and periodically inundated areas of their associated wetlands, or within lakes, ponds, or impoundments having a surface area of 0.5 acre or greater at seasonal low water and which in any case contain fish habitat or are described by one of the following four categories: 1. Waters, which are diverted for domestic use by more than 10 residential or camping units or by a public accommodation facility licensed to serve more than 10 persons, where such diversion is determined by the department to be a valid appropriation of water and the only practical water source for such users. Such waters shall be considered to be Type F Water upstream from the point of such diversion for 1,500 feet or until the drainage area is reduced by 50 percent, whichever is less; 2. Waters, which are diverted for use by federal, state, tribal or private fish hatcheries. Such waters shall be considered Type F Water upstream from the point of diversion for 1,500 feet, including tributaries if highly significant for protection of downstream water quality. The department may allow additional harvest beyond the requirements of Type F Water designation provided the department determines after a landowner-requested on-site assessment by the department of fish and wildlife, department of ecology, the affected tribes and interested parties that: i. The management practices proposed by the landowner will adequately protect water quality for the fish hatchery; and ii. Such additional harvest meets the

DRAFT

	requirements of the water type designation that would apply in the absence of the hatchery; 3. Waters, which are within a federal, state, local, or private campground having more than 10 camping units: Provided, That the water shall not be considered to enter a campground until it reaches the boundary of the park lands available for public use and comes within 100 feet of a camping unit, trail or other park improvement; 4. Riverine ponds, wall-based channels, and other channel features that are used by fish for off-channel habitat. These areas are critical to the maintenance of optimum survival of fish. This habitat shall be identified based on the following criteria: i. The site must be connected to a fish habitat stream and accessible during some period of the year; and ii. The off-channel water must be accessible to fish.
Type Np (Non-Fish)	All segments of natural waters within the bankfull width of defined channels that are perennial nonfish habitat streams. Perennial streams are flowing waters that do not go dry any time of a year of normal rainfall and include the intermittent dry portions of the perennial channel below the uppermost point of perennial flow.
Type Ns (Non-Fish Seasonal	All segments of natural waters within the bankfull width of the defined channels that are not Type S, F, or Np Waters. These are seasonal, nonfish habitat streams in which surface flow is not present for at least some portion of a year of normal rainfall and are not located downstream from any stream reach that is a Type Np Water. Ns Waters must be physically connected by an above-ground channel system to Type S, F, or Np Waters.

2. Mapping. The approximate location of streams is shown on the adopted critical areas maps, pursuant to MTMC 16.15.080. The exact location and classification shall be determined through field investigation by a qualified professional applying the applicable manuals adopted by this chapter.

3. Stream Buffer Areas and Setbacks.

   a. The establishment of buffers shall be required for all development proposals and activities in or adjacent to streams Buffers shall consist of an undisturbed area of native vegetation. If the site has previously been disturbed, the buffer area shall be revegetated, pursuant to an approved enhancement plan.

DRAFT

b. Unless otherwise provided, buildings and other structures shall be set back from the edge of the stream buffer per the table below in this section. The following may be allowed in the building setback area:
    i. Building overhangs, if such overhangs do not extend more than 24 inches into the setback area; and
    ii. Impervious ground surfaces, such as driveways and patios; provided, that such improvements may be subject to water quality regulations, pursuant to City stormwater regulations.

c. Buffers shall be protected during construction by placing a temporary barricade, posting notice of the presence of the critical area, and implementing appropriate erosion and sedimentation controls. Restrictive covenants or conservation easements may be required to provide long-term preservation and protection of buffer areas.

d. The buffer shall be measured from the edge of the channel migration zone (CMZ) (preferred) or ordinary high water mark (OHWM) where a channel migration zone is not present. If neither the CMZ or OHWM can be identified, the buffer shall be measured from the top of the bank if the if the ordinary high water mark cannot be identified.

e. The table below contains minimum buffers for streams:

Water Type	Description	Minimum Buffer Width (in Feet)		Building Setback (in Feet)
S	Shoreline of the state (per RCW 90.58.030)	See MTMC 16.10		
F	Defined channel and periodically inundated areas	150		10
Np	Perennial	100		10
Ns	Seasonal	100		10
–	Intermittent streams			

    i. The buffer widths in the table above assume the buffer is vegetated with a native plant community appropriate for the ecoregion. If the existing buffer does not meet vegetative buffer standards, is unvegetated, sparsely vegetated, or vegetated with invasive species that do not perform needed functions, the buffer must either be densely planted to create the appropriate native plant community or be widened by 33 percent to ensure that the buffer provides adequate functions to protect the stream.

        (A) To meet vegetative buffer standards, the stream buffer must contain at least an average of 80 percent native plant cover, and noxious weed cover cannot exceed 10 percent. The native cover must include tree, shrub and groundcover strata in proportions that mimic native forest.

    ii. For interrupted buffer regulations, see MTMC 16.15.100(B)(5).

    iii. Legally established buffer. Where a buffer has been previously established on a legally created parcel or tract that was legally established according to the regulations in place at the time of establishment and is permanently recorded on title or placed within a separate tract, and the parcels that are included on the plat at the time of recording of the subject parcel or tract, then the buffer shall remain as previously established, provided:

DRAFT

(A) It is equal to or greater than 50 percent of the required standard buffer distance for the applicable stream category; and

(B) Meets vegetative buffer standards above; and

(C) Impact minimization measures are applied.

f. The buffer widths required in this section are minimums and may be increased by the Department in response to site-specific conditions and based on the information submitted to characterize the functions and values of the stream.

g. A stream buffer width greater than the minimum may be required by the Department based on the findings of site-specific studies.

h. Slopes greater than 30% require an increased stream buffer by 50%.

i. The applicant shall implement the enhancement measures, listed below, when developing or redeveloping a site that contains a steam or stream buffer:

i. Removal of fish barriers to restore accessibility to anadromous fish;

ii. Enhancement of fish habitat using log structures incorporated as part of a fish habitat enhancement plan;

iii. Upgrading retention/detention facilities or other drainage facilities to required levels;

iv. Manage stormwater following latest Ecology manual;

v. Stormwater retrofit is required for redevelopment projects; or

vi. Similar measures determined applicable by the Department.

j. The applicant may propose to implement one or more enhancement measures, listed below, when developing or redeveloping a site that contains a stream or stream buffer:

i. Landscaping outside the buffer area with native vegetation or a reduction in the amount of clearing outside the buffer area;

ii. Planting native vegetation within the buffer area, especially vegetation that would increase value for fish and wildlife, increase stream bank or slope stability, improve water quality, or provide aesthetic/recreational value;

iii. Creating a surface channel where a stream was previously culverted or piped;

iv. Removing or modifying existing stream culverts (such as at road crossings) to improve fish passage and flow capabilities which are not detrimental to fish;

v. Upgrading retention/detention facilities or other drainage facilities beyond required levels;

vi. Maintain and restore in-stream connectivity; or

vii. Similar measures determined applicable by the Department.

DRAFT

k. No structures or improvements shall be permitted within the stream buffer area, including buildings, decks, and docks, except as otherwise permitted under one of the following circumstances:

i. When the improvements are part of an approved enhancement, restoration or mitigation plan; or

ii. For construction of new public roads and utilities, and accessory structures, when no feasible alternative location exists; or

iii. Construction of foot trails, according to the following criteria:

(A) Constructed of permeable materials;

(B) Designed to minimize impact on the stream system;

(C) Of a maximum width of eight feet;

(D) Located within the outer half of the buffer, i.e., the portion of the buffer that is farther away from the stream; or

iv. Construction of footbridges with climate- resilient measures; or

v. Construction of educational facilities, such as viewing platforms and informational signs.

4. Long-Term Protection of Streams and Buffers Required. A regulated stream and its associated buffer shall be protected by recording a notice on title, pursuant to MTMC 16.15.250, and can occur by one of the following methods: placing in a separate critical tract on which development is prohibited; protected by execution of an easement; dedicated to a conservation organization or land trust; or similarly preserved through a permanent protective mechanism acceptable to the City. The location and limitations associated with the stream and its buffer shall be shown on the face of the deed or plat applicable to the property and shall be recorded with Snohomish County.

5. Buffer Width Variances. A "minor critical area buffer width variance," defined as up to and including 10 percent of the standard requirement per subsection D of this section, Stream Buffer Areas and Setbacks, may be granted by the Hearing Examiner, pursuant to MTMC 16.15.350, Variances, and the mitigation to achieve the proposed variance results in a higher functional system and values than mitigation would otherwise provide.

6. Alteration or Development of Stream Areas.

a. General Provisions.

i. Alteration of a stream and/or its established buffer may be permitted by the Department subject to the provisions and criteria of this section.

ii. Standards for mitigation of impacts are subject to subsection 16.15.420(E)(7), and with mitigation for critical areas in general as identified in MTMC 16.15.210 through 16.15.240. The mitigation plan shall satisfy performance standards per MTMC 16.15.420(E)(8) of this section, as applicable.

b. Relocation of a Stream.

i. Relocation of Type F, Np, Ns streams may take place only when it is part of an approved mitigation or enhancement or restoration plan, will result in equal or better habitat and water quality, and will not diminish the flow capacity of the stream.

DRAFT

ii. Relocation of a Type F, Np, or Ns stream exclusively to facilitate general site design shall not be permitted.

c. Stream Crossings.

i. Culverts must be designed with climate-resilient measures and are allowable only under the following circumstances:

(A) Only in Type F, Np, or Ns streams;

(B) When fish passage will not be impaired;

(C) When the following design criteria are met:

a. Oversized culverts will be installed;

b. Culverts will include gradient controls and creation of pools within the culvert for Type F streams

c. Gravel substrate will be placed in the bottom of the culvert to a minimum depth of one foot for Type F or Np streams;

(D) The applicant or successors shall, at all times, keep any culvert free of debris and sediment to allow free passage of water and, if applicable, fish.

ii. The City may require that a culvert be removed from a stream as a condition of approval, unless the culvert is not detrimental to fish habitat or water quality, or removal would be a long-term detriment to fish or wildlife habitat or water quality.

7. Mitigation Requirements. Mitigation, when applicable or required, shall be implemented consistent with sections MTMC 16.15.210 through 16.15.240, and any other applicable mitigation provisions in MTMC 16.15.420(F), including the specific performance standards per MTMC 16.15.420(E)(6) of this section.

8. Performance Standards for Stream Mitigation Plans. The performance standards in this subsection shall be incorporated into performance standard requirements set forth in MTMC 16.15.230.

a. Use plants native to the Puget Lowlands. Nonnative, introduced plants or plants listed by the Washington State Department of Agriculture as noxious weeds (Chapter 16-750 WAC) shall not be used;

b. Use plants adapted to and appropriate for the proposed habitats and consider the ecological conditions known or expected to be present on the site;

c. Avoid planting significant areas of the site with species that have questionable potential for successful establishment, such as species with a narrow range of habitat tolerances;

d. Specify plants that are commercially available from native-plant nurseries or available from local sources; if collecting some or all native plants from donor sites, collect in accordance with ecologically accepted methods, such as those described in the Washington Native Plant Society's Policy on Collection and Sale of Native Plants, that do not jeopardize the survival or integrity of donor plant populations;

e. Use perennial plants in preference to annual species;

f. Use plant species high in food and cover value for native fish and wildlife species that are known or likely to use the mitigation site (according to reference wetlands, published information, and professional judgment);

g. Install a temporary irrigation system and specify an irrigation schedule unless a sufficient naturally occurring source of water is demonstrated;

DRAFT

h. For stream substrate, at least one foot of clean inorganic and/or organic materials, such as cobble, gravel, sand, silt, clay, muck, or peat as appropriate shall be ensured. The stream substrate soils shall be free from solid, dangerous, or hazardous substances as defined by Chapter 70.105 RCW and implementing rules;

i. Confine temporary stockpiling of soils to upland areas. Unless otherwise approved by the Department, comply with all applicable best management practices for clearing, grading, and erosion control to protect any nearby surface waters from sediment and turbidity;

j. Show densities and placement of plants; these should be based on the ecological tolerances of species proposed for planting, as determined by a qualified professional;

k. Provide sufficient specifications and instructions to ensure proper placement diversity and spacing of seeds, tubers, bulbs, rhizomes, springs, plugs, and transplanted stock and other habitat features, to provide a high probability of success, and to reduce the likelihood of prolonged losses of stream functions from proposed development. Prepare contingency plans for all mitigation proposals;

l. Do not rely on fertilizers and herbicides to promote establishment of plantings; if fertilizers are used, they must be applied per manufacturer specifications to planting holes in organic or time-release forms, such as Osmocote® or comparable formulations, and never broadcast on the ground surface; if herbicides are used to control invasive species or noxious weeds and to help achieve performance standards, only those approved for use in aquatic ecosystems by the Washington Department of Ecology shall be used; herbicides shall only be used in conformance with all applicable laws and regulations and be applied per manufacturer specifications by an applicator licensed in the state of Washington;

m. Include the applicant's mitigation plan qualified professional in the construction process to ensure the approved mitigation plan is completed as designed. At a minimum, the qualified professional's participation will include site visits to inspect completed rough and final grading, installation of in-water or other habitat structures, and to verify the quality and quantity of native plant materials before and after installation; and

n. During construction, place temporary markers, signs and/or fencing around the perimeter of the critical area, where practical and applicable to particular critical areas.

F. Mitigation of Wildlife Habitat. When applicable or required, mitigation plans for impacts to wildlife habitat shall be prepared and implemented consistent with MTMC 16.15.210 through 16.15.240, together with the standards in this section. Mitigation projects should be completed prior to activities that will disturb habitat. At the very least, mitigation shall be completed immediately following disturbance and prior to use or occupancy of the action or development. Construction of mitigation projects shall be timed to reduce impacts to existing fisheries, wildlife, and flora.

1. Preserve significant or existing native trees, preferably in stands or groups;

2. Wherever possible, retain and consolidate priority habitats into larger, unfragmented, contiguous blocks;

3. Use native plant species adapted to and appropriate for the proposed habitats, and consider the ecological conditions known or expected to be present on the site;

4. Avoid planting significant areas with species that have questionable potential for successful establishment, such as species with a narrow range of habitat tolerances;

5. Specify plants that are commercially available from native-plant nurseries or available from local sources; if collecting some or all native plants from donor sites, collect in accordance with ecologically accepted methods, such as those described in the Washington Native Plant Society's Policy on Collection and Sale of Native Plants, that do not jeopardize the survival or integrity of donor plant populations;

6. Use perennial plants in preference to annual species;

DRAFT

7. Use plant species high in food and cover value for native fish and wildlife species that are known or likely to use the mitigation site (according to reference wetlands, published information, and professional judgment);

8. Install a temporary irrigation system and specify an irrigation schedule unless a sufficient naturally occurring source of water is demonstrated;

9. Confine temporary stockpiling of soils to upland areas. Unless otherwise approved by the department, comply with all applicable best management practices for clearing, grading, and erosion control to protect any nearby surface waters from sediment and turbidity;

10. Show densities and placement of plants; these should be based on the ecological tolerances of species proposed for planting, as determined by a qualified professional;

11. Provide sufficient specifications and instructions to ensure proper placement diversity and spacing of plant material, to provide a high probability of success;

12. Include the applicant's mitigation plan qualified professional in the construction process to ensure the approved mitigation plan is completed as designed. At a minimum, the qualified professional's participation will include site visits to inspect completed rough and final grading, installation of in-water or other habitat structures, and to verify the quality and quantity of native plant materials before and after installation;

13. Create habitat heterogeneity and structural diversity that emulates native plant communities described in Natural Vegetation of Oregon and Washington (Franklin, J.F. and C.T. Dyrness 1988) or other regionally recognized publications on native landscapes;

14. Remove and/or control any noxious weeds or exotic animals which are problematic to the priority habitat area; and

15. On completion of construction, any approved mitigation project must be signed off by the applicant's qualified professional and approved by the Director. Signature will indicate that the construction has been completed as approved.

G Monitoring Fish and Wildlife Habitat Conservation Areas. Maintenance and monitoring is required per MTMC 16.15.240.

H. Wildlife Habitat Protection. Protective covenants shall be provided, pursuant to MTMC 16.15.250 and 16.15.270. (Ord. 2731 § 2 (Exh. A), 2018).

16.15.430 Geologically hazardous areas.

A. Geologic Hazard Classifications. Geologic hazard areas shall be classified according to the criteria in this section. Best available science for geological hazards is available through the Washington Geologic Information Portal through the Department of Natural Resources.

1. Critical Erosion Hazard Areas Lands or areas underlain by soils identified by the U.S. Department of Agriculture Natural Resource Conservation Service as having "severe" or "very severe" erosion hazards. Erosion hazards also include channel migration zones. Erosion hazard areas include areas likely to become unstable, such as bluffs, steep slopes, and areas with unconsolidated soils.

2. Landslide Hazard Areas.

a. Areas at risk of mass movement due to a combination of geologic, topographic, and hydrologic factors. They include any areas susceptible to landslide because of any combination of bedrock, soil, slope (gradient), slope aspect, structure, hydrology, or other factors, and include, at a minimum, the following:

1. Areas of historic failures designated as quaternary slumps, earthflows, mudflows, or landslides on maps published by the United States Geological Survey or Washington department of natural resources, including but not limited to the 2022 Landslide Inventory of Portions of Snohomish County, Washington (Mickelson).

DRAFT

2. Slopes that are parallel or subparallel to planes of weakness (such as bedding planes, joint systems, and fault planes) in subsurface materials;

3. Areas potentially unstable as a result of rapid stream incision, stream bank erosion, and undercutting by wave action, including stream channel migration zones;

4. Areas classified as "Class II," "Class III" or "Class IV" as follows:
(A) Class II/Moderate Hazard. Areas with slopes of between 15 percent and 40 percent and that are underlain by soils that consist largely of sand, gravel or glacial till.

(B) Class III/High Hazard. Areas with slopes between 15 percent and 40 percent that are underlain by soils consisting largely of silt and clay.

(C) Class IV/Very High Hazard. Areas with slopes steeper than 15 percent with mappable zones of emergent water (e.g., springs or ground water seepage), areas of known (mappable) landslide deposits regardless of slope, and all areas with slopes 40 percent or greater.

5. Any area with a slope of 40 percent or steeper and with a vertical relief of 10 or more feet except areas composed of bedrock. A slope is delineated by establishing its toe and top and measured by averaging the inclination over at least 10 feet of vertical relief.

Figure 16.15.430(2)

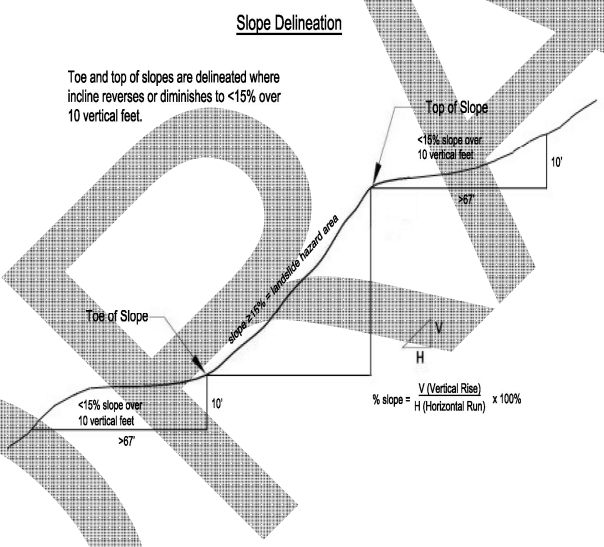

3. Seismic Hazard Areas. "Seismic hazard areas" are lands that, due to a combination of soil and ground water conditions, are subject to severe risk of ground shaking, subsidence or liquefaction of soils during earthquakes. These areas are typically underlain by soft or loose saturated soils (such as alluvium), have a shallow ground water table and are typically located on the floors of river valleys.

B. Buffer Areas and Setbacks.

1. Required buffer widths and setbacks shall reflect the sensitivity of the particular geologic hazard and the risks associated with development. The type and intensity of human activity proposed on, or near, the geologic hazard area should also be considered. In determining the appropriate buffer width, the Department shall consider the standards of this section and recommendations contained in any technical reports required by this chapter.

DRAFT

2. Minimum standards include:

a. Buffers shall be measured from the top and toe and along the sides of the geologically hazardous slope.

b. The minimum required buffers width from a critical geologic hazard shall be 30 feet. The buffer width may be increased when the geotechnical report recommends. The buffer width may also be reduced when the applicant demonstrates, through technical studies, that the reduction will still adequately protect the geologic hazard and the proposed development, in view of proposed engineering techniques.

c. Buildings and structures shall be set back a minimum of 15 additional feet from the edge of the buffer.

3. Buffers shall typically consist of an undisturbed area of native vegetation. No buildings or structures shall be allowed unless otherwise permitted by this chapter. If the site has previously been disturbed, the buffer area shall be revegetated, pursuant to an approved enhancement plan.

4. Buffers shall be protected during and after construction per MTMC 16.15.260, as applicable.

C. Alterations. Alteration of geologic hazard areas may be permitted by the Director, subject to the criteria of this section.

1. General Standard. The City may approve, condition or deny proposals for the alteration of geologic hazard areas based on the degree to which significant risks posed by critical hazard areas to public and private property and to public health and safety can be mitigated. The objective of mitigation measures shall be to render a site containing a critical geologic hazard site as safe as one not containing such hazard or one characterized by a low hazard. In appropriate cases, conditions may include limitations of proposed uses, modification of density, alteration of site layout and other appropriate changes to the proposal. Where potential impacts cannot be effectively mitigated, or where the risk to public health, safety and welfare, public or private property, or important natural resources is significant notwithstanding mitigation, the proposal shall be denied, unless permitted as a reasonable use exception under MTMC 16.15.360.

2. Class IV Landslide Hazard Areas. Alteration shall be prohibited in Class IV (very high) landslide hazard areas, subject to the reasonable use provisions of this chapter.

3. Critical Seismic Hazard Areas.

a. For one-story and two-story residential structures, the applicant shall conduct an evaluation of site response and liquefaction potential based on the performance of similar structures under similar foundation conditions; and

b. For all other proposals, the applicant shall conduct an evaluation of site response and liquefaction potential including sufficient subsurface exploration to provide a site coefficient (S) for use in the static lateral force procedure described in the International Building Code.

4. When development is permitted in geologic hazard areas by these regulations, an applicant and/or its qualified professional shall provide assurances which, at the City's discretion, may include one or more of the following:

a. A letter from the geotechnical engineer and/or geologist licensed in Washington who prepared the studies required by these regulations that risks of damage from the proposal, both on site and off site, are minimal subject to the conditions set forth in the report, that the proposal will not increase the risk of occurrence of the potential geologic hazard, and that measures to eliminate or reduce risks have been incorporated into its recommendations;

b. A letter from the applicant, or the owner of the property if not the applicant, stating an understanding and acceptance of any risk of injury or damage associated with development of the site and agreeing to notify any future purchasers of the site, portions of the site, or structures located on the site of the geologic hazard;

DRAFT

c. A legally enforceable hold harmless agreement, which shall be recorded as a covenant and noted on the face of the deed or plat, and executed in a form satisfactory to the City, acknowledging that the site is located in a geologic hazard area; the risks associated with development of such site; and a waiver and release of any and all claims of the owner(s), their directors, employees, successors or assigns against the City of Mountlake Terrace for any loss, damage or injury, whether direct or indirect, arising out of issuance of development permits for the proposal; and

d. Posting of a guarantee, bond, or other assurance device approved by the City, to cover the cost of monitoring, maintenance and any necessary corrective actions.

D. Critical Area Report Requirements – Geotechnical. In addition to the basic critical area report requirements, per MTMC 16.15.200, the technical information for an erosion hazard or landslide hazard area shall include the following information at a minimum:

1. Site Plan. The critical area report shall include a copy of the site plan for the proposal showing:

a. The height of slope, slope gradient, and cross-section of the project area;

b. The location of springs, seeps, or other surface expressions of ground water on or within 200 feet of the project area or that have potential to be affected by the proposal;

c. The location and description of surface water runoff features.

2. Hazards Analysis. The hazards analysis component of the critical area report shall specifically include:

a. A description of the extent and type of vegetative cover;

b. A description of subsurface conditions based on data from site-specific explorations;

c. Descriptions of surface and ground water conditions, public and private sewage disposal systems, fills and excavations, and all structural improvements;

d. An estimate of slope stability and the effect construction and placement of structures will have on the slope over the estimated life of the structure;

e. An estimate of the bluff retreat rate that recognizes and reflects potential catastrophic events such as seismic activity or a 100-year flood event;

f. Consideration of the run-out hazard of landslide debris and/or the impacts of landslide run-out on down-slope properties;

g. A study of slope stability including an analysis of proposed cuts, fills, and other site grading;

h. An assessment of cumulative impacts;

i. Recommendations for building siting limitations;

j. An analysis of proposed surface and subsurface drainage, and the vulnerability of the site to erosion; and

k. The location and description of surface water runoff features.

l. Analysis of dynamic conditions shall be based on a horizontal ground acceleration equal to one-half of the peak horizontal ground acceleration with a two percent in fifty-year probability of exceedance as established by the current version of the International Building Code. The factor of safety of landslide occurrences shall not be decreased below the limits of 1.5 for static conditions or 1.2 for dynamic conditions. If stability at the proposed development site is below these limits, the proposed development shall provide practicable approaches to reduce risk to human safety and improve the factor of

DRAFT

safety for landsliding. In no case shall the existing factor of safety be reduced for the subject property or adjacent properties.

3. Geotechnical Engineering Report. The technical information for a project within a landslide hazard area shall include a geotechnical engineering report prepared by a licensed geotechnical engineer licensed in Washington that presents engineering recommendations for the following:

a. Parameters for design of site improvements including appropriate foundations and retaining structures. These should include allowable load and resistance capacities for bearing and lateral loads, installation considerations, and estimates of settlement performance;

b. Recommendations for drainage and subdrainage improvements;

c. Earthwork recommendations including clearing and site preparation criteria, fill placement and compaction criteria, temporary and permanent slope inclinations and protection, and temporary excavation support, if necessary; and

d. Mitigation of adverse site conditions including slope stabilization measures and seismically unstable soils, if appropriate.

4. Erosion and Sediment Control Plan. For any development proposal on a site containing an erosion hazard area, an erosion and sediment control plan shall be required. The erosion and sediment control plan shall be prepared in compliance with requirements set forth in the City codes, regulations and standards.

5. Drainage Plan. The technical information shall include a drainage plan for the collection, transport, treatment, discharge, and/or recycling of water prepared in accordance with City codes, regulations and standards. The drainage plan should consider on-site septic system disposal volumes where the additional volume will affect the erosion or landslide hazard area.

6. Mitigation Plans. Hazard and environmental mitigation plans for erosion and landslide hazard areas shall include the location and methods of drainage, surface water management, locations and methods of erosion control, a vegetation management and/or replanting plan, and/or other means for maintaining long-term soil stability.

7. Monitoring Surface Waters. If the Director determines that there is a significant risk of damage to downstream receiving waters due to potential erosion from the site, based on the size of the project, the proximity to the receiving waters, or the sensitivity of the receiving waters, the technical information shall include a plan to monitor the surface water discharge from the site. The monitoring plan shall include a recommended schedule for submitting monitoring reports to the City.

8. Seismic Hazard Areas. In addition to the basic geologic report requirements, a critical area report for a seismic hazard area shall also meet the following requirements:

a. The site map shall show all known and mapped faults within 200 feet of the project area or that have potential to be affected by the proposal.

b. The hazards analysis shall include a complete discussion of the potential impacts of seismic activity on the site (for example, forces generated and fault displacement).

c. A geotechnical engineering report shall evaluate the physical properties of the subsurface soils, especially the thickness of unconsolidated deposits and their liquefaction potential. If it is determined that the site is subject to liquefaction, mitigation measures appropriate to the scale of the development shall be recommended and implemented.

d. For one- and two-story single-family structures, conduct an evaluation of site response and liquefaction potential based on the performance of similar structures under similar foundation conditions.

DRAFT

e. For all other proposals, conduct an evaluation of site response and liquefaction potential including sufficient subsurface exploration to provide a site coefficient (S) for use in the static lateral force procedure described in the Uniform Building Code.

9. Critical Aquifer Recharge Areas. When present, add the information listed in the Critical Aquifer Recharge Reporting Requirements to the geotechnical report.

E. Mitigation Planning. The applicable standards in MTMC 16.15.210 through 16.15.240 shall be incorporated into mitigation plans submitted to the Director to address impacts to geologic hazard areas. Mitigation plans shall contain sufficient information and detail to analyze impacts and alternatives. The following shall be reflected in proposals within geologic hazard areas, at a minimum:

1. A geotechnical study shall be prepared to identify and evaluate potential hazards and to formulate mitigation measures;

2. Construction methods will reduce or not adversely affect geologic hazards;

3. Site planning shall minimize disruption of existing topography and natural vegetation;

4. Impervious surface coverage shall be minimized;

5. Disturbed areas shall be replanted as soon as feasible, pursuant to an approved landscape plan;

6. Clearing and grading shall be limited to the period of May 1st to October 1st unless the geotechnical report specifically addresses measures necessary to perform clearing and grading during other portions of the year;

7. Use of retaining walls that allow maintenance of existing natural slope areas are preferred over graded slopes;

8. Temporary erosion and sedimentation controls, pursuant to an approved plan, shall be implemented during construction;

9. A master drainage plan shall be prepared for large projects as required by the City Engineer;

10. Development shall not increase instability or create a hazard to the site or adjacent properties, or result in a significant increase in sedimentation or erosion;

11. Any other information and analysis, as determined by the Department, to be relevant to incorporate into mitigation plans.

F. Mitigation, when applicable or required, shall be implemented consistent with MTMC 16.15.210, mitigation sequencing, MTMC 16.15.220, mitigation plan, MTMC 16.15.230, performance standards, and MTMC 16.15.240, maintenance and monitoring plan, and any other applicable mitigation provisions in this section, and any specific standards per this section.

G. Geologic Hazard Protection. Protective covenants or conservation easements may, per MTMC 16.15.270, be required to provide long-term preservation and protection. (Ord. 2731 § 2 (Exh. A), 2018).

16.15.440 Frequently Flooded areas.

A. Purpose and Applicability. The purpose of regulating activities and structures in flood hazard areas is to protect the integrity, function, and value of the floodplain and to protect life, property and resources from risks associated with development in flood hazard areas.

B. Location and Designation of Flood Hazard Areas.

1. Flood areas within the City of Mountlake Terrace shall be designated according to the latest version of flood insurance rate maps (FIRM) issued by the Federal Insurance Administrator.

DRAFT

2. No specific buffer widths apply to frequently flooded areas beyond the edge of floodplain Zone A as shown on the FIRMs. However, buffer widths and building setbacks from the edge of other underlying critical areas, as regulated by this chapter, shall apply.

3. A flood elevation level may be amended only through property owner or proponent application to FEMA for a letter of map amendment (LOMA), per FEMA filing requirements and applicable procedures per Chapter 16.18 MTMC. Documentation thereof shall be provided to the City prior to or concurrent with an application to do work subject to the revised flood elevation.

C. Allowed Activities and Standards.

1. No structure or land within a designated floodway shall hereafter be constructed, reconstructed, located, extended, converted, or altered without full compliance with this section and Chapter 16.18 MTMC.

2. Construction, reconstruction, or substantial improvement of any residential or nonresidential structure, or appurtenances, is subject to Chapter 16.18 MTMC, except as provided for in WAC 173-158-070.

3. Any development in flood hazard areas is subject to the applicable provisions of Chapter 15.05 MTMC and any applicable City stormwater standards including Chapters 16.20 and 16.21 MTMC.

4. Critical facilities are subject to the provisions set forth in Chapter 16.18 MTMC.

5. Emergencies, exemptions, and reasonable use exceptions are permitted consistent with MTMC 16.15.100, 16.15.110 and 16.15.360 and Chapter 16.18 MTMC.

6. Elevation Certificate Following Construction. Following construction of a structure in the floodplain, the applicant shall obtain an elevation certificate that records the elevation of the lowest floor. The elevation certificate shall be completed by a surveyor licensed in the state of Washington and shall be submitted to the City and recorded per MTMC 16.15.250, Notice on title.

D. NFIP Compliance – FEMA Habitat Assessment. Projects within the FEMA-designated floodplains are required to prepare a habitat assessment to ascertain their potential effects on endangered species. The assessment shall be prepared in accordance with Floodplain Habitat Assessment and Mitigation Regional Guidance for Puget Sound Basin, 2013, FEMA Region 10, as amended.

1. The assessment shall determine if the project would adversely affect:
    a. Species that are federal, state, or local listed as threatened or endangered;
    b. The primary constituent elements for critical habitat, when designated;
    c. Essential fish habitat designated by the National Marine Fisheries Service;
    d. Fish and wildlife habitat conservation areas;
    e. Other protected areas and elements necessary for species conservation.
2. If the assessment conducted under subsection F of this section concludes the project is expected to have an adverse effect on water quality and/or aquatic or riparian habitat or habitat functions, the applicant shall provide a plan to mitigate those impacts, in accordance with Floodplain Habitat Assessment and Mitigation Regional Guidance for the Puget Sound Basin, 2013, FEMA Region 10, as amended.

E. Variances.

1. Variance requests for actions and activities within the floodplain are subject to the general variance criteria per MTMC 16.15.350 and any additional considerations per MTMC 16.18.060.

DRAFT

2. Variances shall only be issued upon a demonstration that the requirements for variances have been satisfied pursuant to Chapter 16.18 MTMC. Unavoidable impacts to floodplain functions and values shall be mitigated per subsection E of this section.

F. Mitigation. Unavoidable impacts to floodplain functions and values, when applicable or required, shall be mitigated consistent with MTMC 16.15.210 through 16.15.240.

G. Flood Hazard Area Protection. Protective covenants shall be established and noticed on title, pursuant to MTMC 16.15.250 and 16.15.270.

(Ord. 2770 § 4, 2020; Ord. 2731 § 2 (Exh. A), 2018).

16.15.450 Critical Aquifer Recharge Areas.

A. Classification – Critical Aquifer Recharge Areas. Critical Aquifer Recharge Areas, if identified, shall be classified as "low" (Class 3), "medium" (Class 2) and "high" (Class 1) susceptibility based on the soil and ground water conditions and risks to potable water and to surface water during periods of low hydrology. Wellhead protection areas are a type of critical aquifer recharge area. Classification is as follows:

1. Class 1. High susceptibility – uplands and sloping areas underlain predominantly by sand and gravel, valley floors underlain by relatively coarse alluvium, and include QVa soils, the six month, one-year or five-year capture zone of a wellhead protection area associated with a Group A public water system.

2. Class 2. Medium susceptibility – valley floors underlain by relatively fine-grained alluvial soils and the ten-year capture zone of a wellhead protection area associated with a Group A public water system.

3. Class 3. Low susceptibility recharge areas – uplands and sloping areas underlain by silt, clay or glacial till. Private water systems or areas with non-contiguous critical aquifer recharge areas requiring protection from contamination (buffer zone).

B. Mapping. The approximate location and classification of critical aquifer recharge areas is shown on the critical areas maps, pursuant to MTMC 16.15.080. The exact location and classification shall be determined through field investigation by a qualified professional applying the applicable manuals adopted by this chapter. Any critical aquifer recharge areas will be added on the map at such time as they are identified and delineated.

C. Allowed Activities. The following activities are allowed in critical aquifer recharge areas, if identified, pursuant to exempt activities per MTMC 16.15.100 and do not require submission of a critical area report, unless otherwise indicated, or if regulated per MTMC 16.15.090:

1. Development and improvement of parks, recreation facilities, open space, or conservation areas resulting in less than five percent total site impervious surface area, that do not increase the use of a hazardous substance.

2. Construction of structures and improvements, including additions, resulting in less than five percent or 2,500 square feet (whichever is greater) total site impervious surface area that does not result in a change of use or increase the use of a hazardous substance.

3. Rainwater collection and use.

D. Regulated Activities.

1. Development that will not cause contaminants to enter the aquifer may be permitted in critical aquifer recharge areas.

2. The following activities and uses in Table 1 below establishes land uses and related activities that are prohibited and restricted within a specific CARA classification. New land uses or activities that pose a hazard to the city's groundwater resources, resulting from storing, handling, treating, using, producing, recycling, or disposing of hazardous materials or other deleterious substances, are prohibited in CARA class 1 and 2. Some uses are prohibited in all CARA classes. Uses and activities lawfully established prior

DRAFT

to the effective date of this code are considered to be legal nonconforming uses subject to MTMC 16.15.105 and may continue to operate within the scope of the existing use.

Table 1

Use Activity	CARA Restriction
All mineral resource uses	Mining, processing and reclamation of any type below the water table or the upper surface of the saturated groundwater is prohibited in Class 1 and 2 CARA and in exposed QVa soils in Class 3 CARA. A hydrogeologic report is required for the use in Class 3 CARA outside of the area of exposed QVa.
Automotive uses	Wrecking yards are prohibited in all CARA classes. Vehicle towing yards that store vehicles on permeable surfaces are also prohibited. Service stations are prohibited in Class 1 and 2 CARA as well as in exposed QVa soils in Class 3 CARA. In Class 3 CARA outside of the area of exposed QVa, vehicle repair and servicing must be conducted indoors over impermeable pads. For underground storage tanks (UST) with hazardous substances, applicants must demonstrate that the facility complies with federal and state laws.
Bulk storage facilities where flammable or combustible liquids, solids, or gels are received by pipeline or tank vehicle, and are stored or blended in bulk for the purpose of distributing such substances by pipeline, tank vehicle, portable tank, or container;	Prohibited in all CARA.
Cemeteries	Cemeteries are prohibited in the Class 1 and 2 CARA and in exposed QVa soils in Class 3 CARA. Best management practices (BMPs) and integrated pest management (IPM) are required for the use in Class 3 CARA outside of the areas of exposed QVa.
Chemical manufacturing, including but not limited to organic and inorganic chemicals, plastics and resins, pharmaceuticals, cleaning compounds, paints and lacquers, and agricultural chemicals;	Prohibited in Class 1 and 2 CARA as well as in exposed QVa soils in Class 3 CARA. A hydrogeologic report is required for the use in Class 3 CARA outside of the area of exposed QVa. Applicants must demonstrate that the facility complies with federal and state laws.
Crumb rubber (styrene-butadiene rubber) for artificial turf installations.	Prohibited in all CARA.
Dry cleaning	Dry cleaning using chlorinated solvents or using solvent perchloroethylene is prohibited in all CARA classes.
Hazardous liquid transmission pipelines	As defined in Chapter 81.88 RCW, pipelines are prohibited in Class 1 and 2 CARA as well as in exposed QVa soils in Class 3 CARA. A hydrogeologic report is required for the use in Class 3 CARA outside of the area of exposed QVa.
Hazardous waste storage and/or treatment facilities	Hazardous waste storage and/or treatment facilities, as

DRAFT

and/or processing, or disposal of radioactive substances;	defined by Chapter 173-303-70 WAC through Chapter 173-303-100 and Chapter 173-342 WAC, are prohibited in all CARA classes. Storage, processing, or disposal of radioactive substances as defined in RCW 70.99.020 is prohibited in all CARA classes, except for medical equipment and/or material and medical waste, defined by RCW 70A.390.020, that is held for proper disposal. Aboveground storage tanks for hazardous substances or hazardous wastes with primary and secondary containment area(s) and spill protection plan are prohibited in Class 1 and 2 CARA as well as in exposed QVa soils in Class 3 CARA. A hydrogeologic report is required for the use in Class 3 CARA outside of the area of exposed QVa. Underground storage of chemicals, substances or materials that are toxic, hazardous or dangerous is prohibited in Class 1 and 2 CARA. A hydrogeologic report is required for the use in Class 3 CARA;
Hydrocarbon extraction;	Prohibited in all CARA.
Irrigation and infiltration of greywater	Prohibited in all CARA.
Landfills, including hazardous or dangerous waste, municipal solid waste, special waste, woodwaste, and inert and demolition waste landfills;	Prohibited in all CARA. Solid waste is defined in WAC 173-304-100.
Large on-site sewage systems, as defined in Chapter 246-272A WAC	Prohibited in all CARA.
Metal recycling facilities with outdoor storage and handling activities	Prohibited in all CARA.
Mobile fleet fueling operations.	Prohibited in all CARA. “Mobile fleet fueling” means the practice of filling fuel tanks of vehicles from tank vehicles. “Mobile fleet fueling” is also known as wet fueling and wet hosing. “Mobile fleet fueling” does not include fueling at construction sites.
Petroleum refinement processes, including any related reprocessing or storage.	Prohibited in all CARA.
Permanent dewatering of the aquifer when done as part of remediation action that is approved by the Department of Ecology;	Prohibited in all CARA.
Primary and secondary metal industries that manufacture, produce, smelt, or refine ferrous and nonferrous metals from molten materials;	Prohibited in all CARA.
Reclaimed or recycled water use with the exception of uses that discharge to the sanitary sewer;	Prohibited in all CARA.

DRAFT

Solid waste transfer stations.	Prohibited in all CARA. Solid waste is defined under WAC 173-304-100.
Wood Treatment Facilities. Commercial wood preserving and wood products preserving. Treatment facilities that allow any portion of the treatment process to occur over permeable surfaces (both natural and manmade);	Prohibited in all CARA.

E. Alteration or Development of Critical Aquifer Recharge Areas – Standards and Criteria.

1. Development should be clustered and impervious surfaces limited where possible;
2. All development shall implement best management practices for water quality, as approved by the Department, such as biofiltration swales and use of oil-water separators, and BMPs appropriate to the particular use proposed;
3. The City shall impose development conditions to prevent degradation of critical aquifer recharge areas. Development conditions shall be based on all known, available, and reasonable methods of prevention, control, and treatment ("AKART");
4. An emergency response/spill clean-up plan shall be prepared and employees properly trained in reacting to accidental spills;
5. A written operations plan should be developed, including procedures for loading/unloading liquids and for training of employees in proper materials handling;
6. The proposed activity must be designed and constructed in accordance with the City's stormwater manuals adopted in MTMC 16.20;
7. No waste liquids or chemicals of any kind shall be discharged to storm sewers;

F. Critical Area Report Requirements – Critical Aquifer Recharge Areas. Applications for activities where a high susceptibility critical aquifer recharge area is present shall require a hydrogeologic report prepared by a qualified professional—someone who is a currently licensed Washington State geologist holding a current specialty license in hydrogeology. The hydrogeologic report shall contain the following information:

1. Information regarding geologic and hydrogeologic characteristics of the site including the surface location of all critical aquifer recharge areas located on site or immediately adjacent to the site, and permeability of the unsaturated zone.;
2. Description of proposed uses and activities;
3. Ground water depth, flow direction, and gradient based on available information;
4. Currently available data on wells and springs within 1,320 feet of the project area;
5. A spill plan that identifies equipment and structures that could fail, resulting in an impact to the critical aquifer recharge area. Spill plans shall include provisions for regular inspection, repair, and replacement of structures and equipment with the potential to fail
6. When present, add wellhead protection information including protection measures.Proposed best management practices (BMPs) relevant to the proposed activity or use;
7. Historic water quality data for the area to be affected by the proposed activity or use compiled for at least the previous five-year period;

DRAFT

8. Provisions to monitor the groundwater quality and quantity;Discussion of the effects of the proposed project on the ground water quality and quantity, including:

    a. Predictive evaluation of ground water withdrawal effects on nearby wells and surface water features;

    b. Predictive evaluation of contaminant transport based on potential releases to ground water;

G. Third-Party Review. The city may employ a hydrogeologic consultant licensed in Washington State at the applicant's expense for third-party review for compliance
H. Critical Aquifer Recharge Area Protection. Protective covenants shall be provided, pursuant to MTMC 16.15.250 and 16.15.270. (Ord. 2731 § 2 (Exh. A), 2018).

16.15.500 Definitions.
For the purposes of this chapter, the following definitions shall apply:

"Active channel" means the portion of a stream channel defined by the lower limit of continuous riparian vegetation, and it may be delineated by absence of both moss on rocks and rooted vegetation. The upper most elevation of the active channel is sometimes equated with the ordinary high-water mark.

"Alteration" means any human induced change to, addition to, or modification of an existing condition, structure, or use of a critical area or its buffer. Alterations include, but are not limited to, grading, filling, channelizing, dredging, clearing (vegetation), construction, compaction, excavation, or any other activity that changes the character of the critical area.

"Anadromous fish" means fish, such as wild salmon, that spawn and rear in fresh water and mature in the marine environment.

"Applicant" means any person, party, firm, corporation, or other entity which applies for a development proposal, permit or approval subject to review under this chapter.

"Application" means the completed form or forms and all accompanying documents, exhibits, and fees required of an applicant for review and approval to conduct an activity or use as required and permitted in this chapter.

"Aquifer" means, generally, any water-bearing soil or rock unit. Specifically, a body of soil or rock that contains sufficient saturated permeable material to conduct ground water and yield economically significant quantities of ground water to wells or springs.

"Aquifer susceptibility" means the ease with which contaminants can move from the land surface to the aquifer based solely on the types of surface and subsurface materials in the area.

"Artificially created wetland" means wetlands created from nonwetland sites through purposeful, legally authorized human action, such as irrigation and drainage ditches, grass-lined swales, canals, retention or detention facilities, wastewater treatment facilities, farm ponds, and landscape amenities.

"Base flood" or "100-year flood" means a flood having a one percent chance of being equaled or exceeded in any given year, also referred to as the "100-year flood." The base flood is determined for existing conditions, and is shown on Flood Insurance Rate Maps (FIRM), current version; unless a more complete basin plan including projected flows under future developed conditions has been completed and adopted by the City of Mountlake Terrace, in which case these future flow projections shall be used. In areas where the flood insurance study for the City includes detailed base flood calculations, those calculations may be used.

"Best available science" means current scientific information used in the process to designate, protect, or restore critical areas, that is derived from a valid scientific process as defined by WAC 365-195-900 through 365-195-925. Sources of the best available science are included in Citations of Recommended Sources of Best Available Science for Designating and Protecting Critical Areas published by the Washington State Department of Community, Trade and Economic Development.

DRAFT

“Best management practices (BMPs)” means conservation practices or systems of practices and management measures that:

1. Controls soil loss and reduces water quality degradation caused by high concentrations of nutrients, animal waste, toxins, and sediment;

2. Minimizes adverse impacts to surface water and ground water flow and circulation patterns, and to the chemical, physical, and biological characteristics of wetlands;

3. Protects trees and vegetation designated to be retained during and following site construction, and uses native plant species appropriate to the site for revegetation of disturbed areas; and

4. Provides standards for proper use of chemical herbicides within critical areas.

“Buffer, critical area” means that area which surrounds and helps protect the functions and values of critical areas from adverse impacts, minimizes public safety risks, and/or may provide wildlife habitat integrally related to the critical area. The purpose of the buffer shall be to protect the integrity, function and value of the subject critical area (wetlands, streams, and wildlife habitat areas), and/or to protect life, property and resources from risks associated with development on unstable or critical lands (geologic hazard areas, flood hazard areas, aquifer recharge). Buffers shall typically consist of an undisturbed area of native vegetation

“Buffer, functionally disconnected,” see “Functionally disconnected buffers.”

“Building setback” means an area that begins at the outermost edge of a critical area buffer which shall not contain a building or structure of such size, individually or cumulatively, as to require issuance of a building permit. Building/structure overhangs not more than 24 inches may extend into the required building setback.

“Channel Migration Zone” (CMZ) means areas in a floodplain where a stream or river channel can be expected to move naturally over time in response to gravity and topography. It includes the land adjacent to the current river channel that is at high risk of occupation by the channel within the next 100 years. All areas separated from the active channel by a legally existing artificial structure(s) that is publicly maintained and likely to restrain channel migration, including transportation facilities, built above or constructed to remain intact through the one hundred-year flood, shall not be considered to be in the channel migration zone. Areas behind natural or manmade features which limit channel migration that allow fish passage shall not be included in the channel migration zone.

“City” means the City of Mountlake Terrace.

“Clearing” means the removal of timber, brush, grass, ground cover or other vegetative matter from a site which exposes the earth’s surface of the site, or any actions which disturb the existing ground surface.

“Comprehensive Plan” means the City of Mountlake Terrace Comprehensive Plan as now adopted or hereafter amended.

“Conservation easement” means a legal agreement that the property owner enters into to restrict uses of the land, providing permanent or long-term protection that is granted to the City or a nonprofit entity (e.g., land trust) to enable the City to protect a critical area and associated buffer from use and development that is inconsistent with this chapter.

“Contaminant loading potential” means the availability within an aquifer recharge area of any potential physical, chemical, biological, or radiological substance that enters the hydrological cycle and may cause a deleterious effect on ground water resources.

“Creation” means the purposeful and legally authorized construction or forming of a wetland or stream from an upland (nonwetland or dry) site through artificial means. See also “Mitigation, compensatory.”

“Critical aquifer recharge areas” are areas with a critical recharging effect on aquifers used for potable water, including areas where an aquifer that is a source of drinking water is vulnerable to contamination that would affect the potability of the water, or is susceptible to reduced recharge. “Critical area report” means a report prepared by a

DRAFT

"qualified professional" (as that term is defined in this section) to determine the presence, type, class, size, function and/or value of an area and mitigation and monitoring of impacts subject to these regulations.

"Critical area tract" means land held in private ownership and retained in an open condition in perpetuity for the protection of critical areas.

"Critical areas" means any of the following areas or ecosystems: wetlands, critical aquifer recharge areas, fish and wildlife habitat conservation areas, frequently flooded areas, and geologically hazardous areas, and as defined in Chapter 36.70A RCW and this chapter.

"Critical erosion hazard areas" means lands or areas underlain by soils identified by the U.S. Department of Agriculture Natural Resource Conservation Service as having "severe" or "very severe" erosion hazards..

"Critical facility" means a facility for which even a slight chance of flooding, inundation, or impact from a hazard event might be too great. Critical facilities include, but are not limited to, schools, nursing homes, hospitals, police, fire, and emergency response installations, and installations that produce, use, or store hazardous materials or hazardous waste.

"Critical geologic hazard areas" means lands or areas subject to high or severe risks of geologic hazard, including critical erosion hazard areas, critical landslide hazard areas, and critical seismic hazard areas.

"Priority habitat" means habitat areas associated with threatened, endangered, sensitive, monitor or priority species of plants or wildlife and which, if altered, could reduce the likelihood that the species will maintain and reproduce over the long term. Such areas are identified herein with reference to lists, categories and definitions of species promulgated by the Washington Department of Fish and Wildlife (Nongame Data System Special Animal Species) as identified in WAC 232-12-011 or 232-12-014; in the priority habitat and species (PHS) program of the Department of Fish and Wildlife; or by rules and regulations adopted currently or hereafter by the U.S. Fish and Wildlife Service or the National Marine Fisheries Service.

"Landslide hazard areas" means lands or areas where there is a moderate (Class II), high (Class III) or very high (Class IV) risk of landslide due to a combination of slope, soil permeability and water.

"Critical seismic hazard areas" means lands or areas where there is a high risk of seismic events and damage.

"Department" means the City of Mountlake Terrace Community and Economic Development Department, or successor agency, unless the context indicates otherwise.

"Development" means any human-made change to real estate including, but not limited to, buildings or other structures, grading, dredging, filling, paving, mining, excavation, drilling, or storage of equipment and materials, or any other activity of a temporary or permanent nature which results in the removal of vegetation or in the alteration of natural site characteristics.

"Director" means the Director of the City of Mountlake Terrace Community and Economic Development Department, or his/her designee.

"Earth/earth material" means naturally occurring rock, soil, stone, sediment, or a combination thereof.

"Ecosystem functions" means the products, physical and biological conditions, and environmental qualities of an ecosystem that result from interactions among ecosystem processes and ecosystem structures. Ecosystem functions include, but are not limited to, sequestered carbon, attenuated peak streamflow, aquifer water level, reduced pollutant concentrations in surface and ground waters, cool summer in-stream water temperatures, and fish and wildlife habitats.

"Ecosystem values" means the cultural, social, economic, and ecological benefits attributed to ecosystem functions.

"Emergency" means that there exists an immediate threat to public health, safety, or welfare, or that the circumstances pose an immediate risk of damage to private property and require remedial or preventative action in a time frame too short to allow for compliance with the standard procedural requirements of this chapter.

DRAFT

“Enhancement” means the improvement of an existing viable wetland, stream or habitat area or the buffers established for such areas, through such measures as increasing plant diversity, increasing wildlife habitat, installing environmentally compatible erosion controls, increasing structural diversity or removing plant or animal species that are not indigenous to the area. Enhancement also includes actions performed to improve the quality of an existing degraded wetland, stream or habitat area. See also “Restoration.”

“Erosion” means a process whereby wind, rain, water and other natural agents mobilize and transport soil particles.

“Erosion control” means on-site and off-site control measures needed to control conveyance or deposition of earth, turbidity or pollutants during development, construction, or restoration. Erosion control may be temporary or permanent.

“Erosion hazard areas” are those areas containing soils which, according to the United States Department of Agriculture Natural Resources Conservation Service Soil Survey Program, may experience significant erosion. Erosion hazard areas also include channel migration zones. Erosion hazard areas include areas likely to become unstable, such as bluffs, steep slopes, and areas with unconsolidated soils.

“Excavation” means the removal or displacement of earth material by human or mechanical means.

“Exotic” means any species of plant or animal that is foreign and not indigenous to the Mountlake Terrace area including non-native invasive species from other regions of the conterminous United States.

“Fill/fill material” means a deposit of earth material placed by human or mechanical means.

“Filling” means the act of transporting or placing (by any manner or mechanism) fill material from, to, or on any surface water body or wetland, soil surface, sediment surface, or other fill material.

“Fish and wildlife habitat conservation areas” (FWHCAs) means areas that serve a critical role in sustaining needed habitats and species for the functional integrity of the ecosystem, and which, if altered, may reduce the likelihood that the species will persist over the long term. These areas may include, but are not limited to, rare or vulnerable ecological systems, communities, and habitat or habitat elements including seasonal ranges, breeding habitat, winter range, and movement corridors; and areas with high relative population density or species richness. "Habitats of local importance" designated as fish and wildlife habitat conservation areas include those areas found to be locally important by counties and cities. "Fish and wildlife habitat conservation areas" does not include such artificial features or constructs as irrigation delivery systems, irrigation infrastructure, irrigation canals, or drainage ditches that lie within the boundaries of, and are maintained by, a port district or an irrigation district or company.

“Fish habitat” means the habitat used by any fish at any life stage at any time of the year, including potential habitat likely to be used by fish which could be recovered by restoration or management and includes off-channel habitat.

“Flood hazard areas” means those areas subject to inundation by the base flood. A flood hazard area consists of the floodplain, flood fringe, and floodway.

“Flood Insurance Rate Map (FIRM)” means the official map prepared as part of (but published separately from) the Flood Insurance Rate Study on which the Federal Emergency Management Agency has delineated both the areas of special flood hazards and the applicable risk premium zones.

“Flood or flooding” means a general and temporary condition of partial or complete inundation of normally dry land areas from the overflow of inland waters and/or the unusual and rapid accumulation of runoff of surface waters from any source.

“Floodplain” means the total area adjoining a river, stream, watercourse, or lake subject to inundation by the base flood.

“Floodplain, 100-year,” “100-year floodplain” or “flood hazard areas” means those lands which are subject to a one percent or greater chance of flooding in any year.

DRAFT

"Floodway" means the channel of the stream or river and that portion of the adjoining floodplain which is necessary to contain and discharge the base flood flow without increasing the base flood elevation more than one foot. It is generally associated with rapidly flowing water.

"Frequently flooded areas" are lands in the floodplain subject to at least a one percent or greater chance of flooding in any given year, or within areas subject to flooding due to high groundwater. These areas include, but are not limited to, streams, rivers, lakes, coastal areas, wetlands, and areas where high groundwater forms ponds on the ground surface, and those lands that provide important flood storage, conveyance, and attenuation functions, as determined by the Director in accordance with WAC 365-190-080(3). Classifications of frequently flooded areas include, at a minimum, the 100-year floodplain designations of the Federal Emergency Management Agency and the National Flood Insurance Program (NFIP).

"Functionally disconnected buffer" means legally established development blocks the protective measures that a buffer provides and increasing the buffer of the far side of the development would add no protective benefit. Functionally disconnected buffers can be created by significant developments, public infrastructure such as paved roads and railroads, and private development. Functionally disconnected buffers typically do not include trails, minor accessory structures, paths, driveways serving a single unit residence.

"Functions and values" or "functions" means the beneficial roles served by critical areas including, but not limited to, water quality protection and enhancement; fish and wildlife habitat; food chain support; flood storage, conveyance and attenuation; ground water recharge and discharge; erosion control; wave attenuation; protection from hazards; historical, archaeological, and aesthetic value protection; educational opportunities; and recreation.

"Geologic hazard areas" means those areas that because of their susceptibility to erosion, landsliding, earthquake, or other geological events, may not be suited to siting commercial, residential or industrial development consistent with public health or safety concerns.

"Grading" means any excavating, filling, clearing, leveling, or contouring or any combination thereof of the ground surface by human or mechanical means.

"Habitat assessment" means a written document that describes a project, identifies and analyzes the project's impacts to habitat for species discussed in the "Endangered Species Act – Section 7 Consultation Final Biological Opinion and Magnuson-Stevens Fishery Conservation and Management Act Essential Fish Habitat Consultation for the Implementation of the National Flood Insurance Program in the State of Washington, Phase One Document – Puget Sound Region," and provides an effects determination.

"Habitat connectivity" means the degree to which the landscape facilitates or impedes wildlife movement.

"Habitat corridor" means corridors set aside and protected for preserving connections between habitats on development proposal sites that contain streams and/or wetlands with a moderate to high habitat score greater than or equal to six on the Washington State Wetland Rating System for Western Washington (Department of Ecology 2014 or as revised) that are located within 200 feet of an on-site or off-site stream and/or wetland with a moderate to high habitat score greater than or equal to six on the Washington State Wetland Rating System for Western Washington. Fish and wildlife habitat corridors do not increase stream buffers, except as required to provide a connection between two features as described above.

"Habitat management" means management of land and its associated resources/features to maintain species in suitable habitats within their natural geographic distribution so that isolated subpopulations are not created. This does not imply maintaining all habitat or individuals of all species in all cases.

"Habitats of local importance" means habitats designated as fish and wildlife habitat conservation areas to include those areas found to be locally important by the city (WAC 365-190-030(6)(b)).

"Hazard areas" means areas designated as frequently flooded areas or geologically hazardous areas due to potential for erosion, landslide, seismic activity, mine collapse, or other geological condition.

DRAFT

“Hazard tree” means a tree or tree part that is structurally unsound and has a high likelihood of failure and causing damage or injury and is therefore a threat to life, property, or public safety.

“High impact land use” means land uses which are likely to have significant adverse impacts to critical areas because of the intensity of the use, levels of human activity, use of machinery or chemicals, site design or arrangement of buildings and structures. High impact land uses include, but are not limited to, active recreation, residential, institutional, commercial, and industrial land uses.

“Hydrologically isolated” means wetlands which: (1) have no surface water connection to a lake, river, or stream during any part of the year; (2) are outside of and not contiguous to any 100-year floodplain of a lake, river, or stream; and (3) have no contiguous hydric soil between the S and any lake, river, or stream. May also be a pond excavated from uplands with no surface water connection to a stream, lake, or other wetland.

“Imminent hazard tree” means hazard tree that presents an immediate threat to public health, safety, or welfare, or that pose an immediate risk of damage to private property and that require remedial or preventative action in a time frame too short to allow for compliance with the standard procedural requirements of this chapter.

“In-kind mitigation” or “in-kind compensation” means to replace a critical area whose characteristics and functions closely approximate those destroyed or degraded by a regulated activity.

“Intentionally created streams” means streams created through purposeful human action, such as irrigation and drainage ditches, grass-lined swales, and canals. This definition does not include stream modifications performed, pursuant to City authorization, such as changes or redirection of stream channels.

“Landslide” means episodic downslope movement of a mass of soil or rock.

“Landslide hazard areas” means areas at risk of mass movement due to a combination of geologic, topographic, and hydrologic factors.

“Low impact development” means A stormwater and land use management strategy that strives to mimic natural hydrologic conditions by emphasizing the pre-disturbance hydrologic processes of infiltration, filtration, storage, evaporation and transpiration.

“Low impact land use” means land uses which are not likely to have significant adverse impacts to critical areas because of the intensity of the use, levels of human activity, use of machinery or chemicals, site design or arrangement of buildings and structures. Depending on the specific context, examples of low impact land uses may include utility facilities and passive recreation.

“Mitigation” or “compensatory mitigation” means to replace project or activity-induced losses or impacts to critical area or buffers, and includes, but is not limited to, restoration, creation, preservation or enhancement. (See also separate definitions.)

1. Restoration – Actions performed to reestablish wetland, stream or other critical area functional characteristics and processes that have been lost by alterations, activities, or catastrophic events within an area that no longer meets the definition of that critical area.

2. Creation – Actions performed to intentionally establish a wetland, stream or other critical area at a site where it did not formerly exist.

3. Preservation – Actions taken to ensure the permanent protection of existing, high-quality wetland, stream or other critical area.

4. Enhancement – Actions performed to improve the condition of existing degraded wetland, stream or other critical area so that the functions they provide are of a higher quality.

Mitigation Bank. See “Wetlands mitigation bank.”

DRAFT

"Mitigation, off-site" or "off-site mitigation" means to replace a critical area, buffer and functions, on a site or in an area other than the site impacted by an allowable use or activity.

"Mitigation, on-site" or "on-site mitigation or compensation" means to replace critical areas at or adjacent to the site on which a critical area has been impacted.

"Mitigation, out-of-kind" or "out-of-kind mitigation" means to replace a critical area, buffer and their functions away from the site on which a critical area has been impacted with a substitute critical area, buffer or function whose characteristics do not closely approximate those adversely affected, destroyed or degraded by an allowable use or activity.

"Mitigation sequencing" means to consider and/or perform mitigation actions in a priority or sequential order from avoidance to compensation, as defined by this chapter.

"Monitoring" means the collection and analysis of data by various methods for the purposes of understanding and documenting changes in natural ecosystems and features, and includes gathering baseline data, evaluating the impacts of development proposals on the biological, hydrologic and geologic elements of such systems and assessing the performance of required mitigation measures.

"MTMC" means Mountlake Terrace Municipal Code.

"Native vegetation" means vegetation existing on a site or plant species which are or were indigenous to the area in question.

"No net loss of critical areas" refers to the actions taken to achieve and ensure no overall reduction in existing ecosystem functions and values or the natural systems constituting the protected critical areas. This may involve fully offsetting any unavoidable impacts to critical area functions and values. This principal does not apply to critical aquifer recharge areas.

The concept of "net" as used herein, recognizes that any development has potential or actual, short-term or long-term impacts and that through application of appropriate development standards and employment of mitigation measures in accordance with the mitigation sequence, those impacts will be addressed in a manner necessary to assure that the end result will not diminish the critical area resources and functions as they currently exist.

"Ordinary High Water Mark" (OHWM) means (1) That mark that will be found by examining the bed and banks and ascertaining where the presence and action of waters are so common and usual, and so long continued in all ordinary years, as to mark upon the soil a character distinct from that of the abutting upland (Washington Department of Ecology 2016). (2) That line on the shore established by the fluctuations of water and indicated by physical characteristics such as a clear, natural line impressed on the bank, shelving, changes in the character of soil, destruction of terrestrial vegetation, the presence of litter and debris, or other appropriate means that consider the characteristics of the surrounding areas (U.S. Army Corps of Engineers, 2014).

"Permit, critical area" means any authorization to proceed with an activity, action, or use in a critical area or buffer. An authorization may consist of an approved land use, building, or other type of construction, permit.

"Priority habitats and species" means important fish and wildlife species and habitats as determined by the Washington State Department of Fish and Wildlife. Priority Habitats include endangered, threatened, sensitive, candidate, and vulnerable species and habitats deemed priorities of WDFW and reflective of best available science.

"Priority species" means a fish or wildlife species requiring protective measures and/or management actions to ensure its survival. A Priority Species fits one or more of the following criteria (WDFW Priority Habitats and Species List):

- is a State-listed endangered, threatened, sensitive, or candidate species;
- has vulnerable aggregations; or
- is of recreational, commercial, and/or tribal importance.

DRAFT

those species that are so identified by the Washington Department of Fish and Wildlife due to their population status and their sensitivity to habitat manipulation. Priority species include those which are state-listed endangered, threatened, sensitive and candidate species; animal aggregations considered vulnerable; vulnerable species of recreational, commercial or tribal importance; as well as other species of concern and game species.

“Qualified Arborist” means an individual with relevant education and training in arboriculture or urban forestry, having one or more of the following credentials:
(1) International Society of Arboriculture (ISA) Certified Arborist;
(2) Tree Risk Assessor Qualification (TRAQ) as established by the ISA (or equivalent);
(3) American Society of Consulting Arborists (ASCA) registered Consulting Arborist;
(4) Society of American Foresters (SAF) Certified Forester for Forest Management Plans; and
(5) Board Certified Master Arborist as established by the ISA.
A qualified arborist must have the TRAQ or equivalent qualification to submit tree risk assessment reports related to hazard tree removal.

“Qualified Professional.” For purposes of this chapter, “qualified professional” shall mean a person who has attained a degree from an accredited college or university in the subject matter necessary to evaluate the critical area in question (e.g., biology, ecology or horticulture/arboriculture for wetlands, streams and wildlife habitat and significant vegetation, geology and/or civil engineering for geologic hazards and critical aquifer recharge areas), and/or who is professionally trained and/or certified or licensed by the state of Washington to practice in the scientific disciplines necessary to identify, evaluate, manage and mitigate impacts to the critical area in question and who has at least two years of experience in the relevant discipline. In addition, for a Critical Aquifer Recharge Area hydrogeologic report, a qualified professional is someone who is a currently licensed Washington State geologist holding a current specialty license in hydrogeology.

“Qualified Wetland Professional” means a person with professional wetland experience that meets the following criteria:

a. A Bachelor of Science or Bachelor of Arts or equivalent degree in hydrology, soil science, botany, ecology, resource management, or related field, or four years of full-time work experience as a wetland professional may substitute for a degree, and

b. At least two additional years of full-time work experience as a wetland professional; including delineating wetlands, preparing wetland reports, conducting function assessments, and developing and implementing mitigation plans, and

c. Completion of additional wetland-specific training programs. This could include a more comprehensive program such as the University of Washington Wetland Science and Management Certificate Program or individual workshops on topics such as wetland delineation, function assessment, mitigation design, hydrophytic plant or hydric soil identification.

A person certified as a Professional Wetland Scientist through the Society of Wetland Scientists professional certification program meets the above criteria.

“Recreation” means an active or passive enjoyable outdoor leisure activity.

1. Active recreation – Outdoor recreational activity that may require development of facilities, and can have a high impact on critical areas, such as larger group activities, organized sports, playground activities, and the use of motorized equipment.

2. Passive recreation – Nonconsumptive recreation, education, and scientific research activities that are smaller scale with low impact to critical areas including, but not limited to, interpretive field trips, fishing, hiking, canoeing, kayaking, and bird or wildlife watching.

“Redevelopment” means development of a site that contains or has contained real estate improvements such as, but not limited to, buildings or other structures, mining, dredging, filling, grading, paving, or excavation.

DRAFT

“Regulated activity” means activities that have a potential to significantly impact a critical area that is subject to the provisions of this chapter. Regulated activities generally include but are not limited to any filling, dredging, dumping or stockpiling, draining, excavation, flooding, clearing or grading, construction or reconstruction, driving pilings, obstructing, shading, clearing or harvesting.

“Restoration” means to reestablish critical area functional values and characteristics, to its unaltered state, prior to being destroyed or degraded by past alterations activities, past management activities, or catastrophic events, as closely as possible. Commonly applies, but is not limited to, to active steps taken to restore damaged wetlands, streams, protected habitat, or their buffers to the functioning condition that existed prior to an unauthorized alteration. (See also “Mitigation, compensatory” and “Enhancement.”)

“Riparian habitat” means areas adjacent to aquatic systems with flowing water that contain elements of both aquatic and terrestrial ecosystems that mutually influence each other.

“Seismic hazard areas” means areas that, due to a combination of soil and ground water conditions, are subject to risk of damage as a result of earthquake-induced ground shaking, slope failure, subsidence or liquefaction of soils.

“Significant tree” means a healthy coniferous or deciduous tree, eight inches in diameter or greater , measured at diameter breast height (DBH) for a deciduous tree; andand at least seven feet in height for a coniferous tree.

“Site” means the location containing a regulated critical area and on which a regulated activity is proposed. The location may be a parcel or portion thereof, or any combination of contiguous parcels where a proposed activity may impact a critical area.

“Slope” means an inclination of the earth’s surface expressed as the ratio of horizontal distance to vertical distance.

“Slope, steep” means a slope of 40 percent or more within a vertical elevation change of at least 10 feet. For the purpose of this definition, a slope is delineated by establishing the “toe” and “top” of slope, as defined by this section, and is measured by averaging the inclination over at least 10 feet of elevation difference. See “Critical landslide hazard areas.”

“Streams” means those areas where surface waters produce a defined channel or bed. A “defined channel or bed” is an area which demonstrates clear evidence of the passage of water and includes, but is not limited to, bedrock channels, gravel beds, sand and silt beds, and defined-channel swales. The channel or bed need not contain water year-round. This definition is not intended to include artificially created irrigation ditches, canals, storm or surface water devices or other entirely artificial watercourses unless they are used by salmonids or created for the purposes of stream mitigation.

“Stream buffer” means a designated area contiguous or adjacent to a stream that is required for the continued maintenance, function, and structural stability of the stream. Functions of a buffer include shading, input of organic debris and coarse sediments, uptake of nutrients, stabilization of banks, pollution control, protection from intrusion, or maintenance of wildlife habitat.

“Structural diversity, vegetative” means the relative degree of diversity or complexity of vegetation in a wildlife habitat area as indicated by the stratification or layering of different plant communities (e.g., ground cover, shrub layer and tree canopy); the variety of plant species; and the spacing or pattern of vegetation.

“Substantial improvement” means any repair, reconstruction or improvement the cost of which, during any three-year period, is more than 50 percent of the market value of the structure either:

1. Before the improvement is started; or

2. Before the damage occurred if the structure damaged is being replaced. An improvement occurs when the first alteration of any wall, ceiling, floor or other structural part of the building commences, whether or not the alteration affects the external dimensions of the structure. Substantial improvement does not include:

a. An improvement undertaken solely to comply with existing state or local health, sanitary or safety code specifications which are necessary to assure safe conditions; or

DRAFT

b. Alteration of a structure listed on the National Register of Historic Places or a state inventory of historic places.

“Substrate” means the soil, sediment, decomposing organic matter or combination of those located on the bottom surface of the wetland, lake, stream or river.

“Toe” or “toe of slope” means a distinct topographic break in slope that separates slopes inclined at less than 40 percent from slopes inclined at 40 percent or more. Where no distinct break exists, the “toe” of a slope is the lowermost limit of the area where the ground surface drops 10 feet or more vertically within a horizontal distance of 25 feet.

“Top” or “top of slope” means a distinct topographic break in slope that separates slopes inclined at less than 40 percent from slopes inclined at 40 percent or more. Where no distinct break exists, the “top” of a slope is the uppermost limit of the area where the ground surface drops 10 feet or more vertically within a horizontal distance of 25 feet.

Tree, Hazard. See “Hazard tree.”

Tree, Significant. See “Significant tree.”

“Utility” includes natural gas, electric, telephone and telecommunications, cable communications, water, sewer, or storm drainage and their respective facilities, lines, pipes, mains, equipment and appurtenances.

“Variance” means an adjustment in the application of the specific provisions of this chapter to a particular piece of property which, because of a unique physical character or condition, is deprived of privileges commonly enjoyed by other properties in similar circumstances.

“Water-dependent use” means a principal use which can only exist when the land/water interface provides biological or physical conditions necessary for the use.

"Wellhead protection area (WHPA)" means protective areas associated with public drinking water sources established by water systems and approved or assigned by the state department of health.

“Wetland” or “wetlands” means areas that are inundated or saturated by surface water or ground water at a frequency and duration sufficient to support and that under normal circumstances do support a prevalence of vegetation typically adapted for life in saturated soil conditions. Wetlands generally include swamps, marshes, bogs, and similar areas. Wetlands do not include those artificial wetlands intentionally created from nonwetland sites, including, but not limited to, irrigation and drainage ditches, grass-lined swales, canals, detention facilities, wastewater treatment facilities, farm ponds, and landscape amenities, or those wetlands created after July 1, 1990, that were unintentionally created as a result of the construction of a road, street or highway. However, wetlands may include those artificial wetlands intentionally created from nonwetland areas created to mitigate conversion of wetlands.

Wetland Classification. Wetland classifications shall incorporate the Washington State Wetlands Rating System for Western Washington (Department of Ecology 2014 Update Publication No. 23-06-009 or as revised).

“Wetlands mitigation bank” means a site where wetlands are restored, created, enhanced, or in exceptional circumstances, preserved, expressly for the purpose of providing compensatory mitigation in advance of unavoidable impacts to wetlands or other aquatic resources are typically unknown at the time of certification to compensate for future, permitted impacts to similar resources.

“Wildlife habitat” means areas including naturally occurring ponds that provide food, protective cover, nesting, loafing, breeding or movement for fish and wildlife and with which individual species have a primary association.

(Ord. 2747 § 5, 2019; Ord. 2731 § 2 (Exh. A), 2018).

DRAFT

APPENDIX E

Prevailing Wage Rates

State of Washington
Department of Labor & Industries
Prevailing Wage Section - Telephone 360-902-5335
PO Box 44540, Olympia, WA 98504-4540
Washington State Prevailing Wage

The PREVAILING WAGES listed here include both the hourly wage rate and the hourly rate of fringe benefits. On public works projects, worker's wage and benefit rates must add to not less than this total. A brief description of overtime calculation requirements are provided on the Benefit Code Key.

Journey Level Prevailing Wage Rates for the Effective Date: 04/22/2026

Snohomish County

Trade	Job Classification	Wage	Holiday	Overtime	Note	Risk Clas
Asbestos Abatement Workers	Journey Level	$67.39	**5D**	**1H**		**View**
Boilermakers	Journey Level	$80.89	**5N**	**1C**		**View**
Brick Mason	Journey Level	$76.07	**7E**	**1N**		**View**
Brick Mason	Pointer-Caulker-Cleaner	$76.07	**7E**	**1N**		**View**
Building Service Employees	Janitor	$17.13		**1**		**View**
Building Service Employees	Shampooer	$17.13		**1**		**View**

Building Service Employees	Waxer	$17.13		1		View
Building Service Employees	Window Cleaner	$17.13		1		View
Cabinet Makers (In Shop)	Journey Level	$27.33	5C	2M		View
Carpenters	Acoustical Worker	$83.21	15J	11U		View
Carpenters	Bridge Dock and Wharf Carpenter	$84.81	15J	11U	9L	View
Carpenters	Floor Layer & Floor Finisher	$83.21	15J	11U		View
Carpenters	General Carpenter	$83.21	15J	11U		View
Carpenters	Scaffold Erector	$83.21	15J	11U		View
Cement Masons	Application of all Composition Mastic	$81.87	15J	4U		View
Cement Masons	Application of all Epoxy Material	$81.36	15J	4U		View
Cement Masons	Application of all Plastic Material	$81.87	15J	4U		View
Cement Masons	Application of Sealing Compound	$81.36	15J	4U		View

Cement Masons	Application of Underlayment	$81.87	**15J**	**4U**	**View**
Cement Masons	Building General	$81.36	**15J**	**4U**	**View**
Cement Masons	Composition or Kalman Floors	$81.87	**15J**	**4U**	**View**
Cement Masons	Concrete Paving	$81.36	**15J**	**4U**	**View**
Cement Masons	Curb & Gutter Machine	$81.87	**15J**	**4U**	**View**
Cement Masons	Curb & Gutter, Sidewalks	$81.36	**15J**	**4U**	**View**
Cement Masons	Curing Concrete	$81.36	**15J**	**4U**	**View**
Cement Masons	Finish Colored Concrete	$81.87	**15J**	**4U**	**View**
Cement Masons	Floor Grinding	$81.87	**15J**	**4U**	**View**
Cement Masons	Floor Grinding/ Polisher	$81.36	**15J**	**4U**	**View**
Cement Masons	Green Concrete Saw, self-powered	$81.87	**15J**	**4U**	**View**
Cement Masons	Grouting of all Plates	$81.36	**15J**	**4U**	**View**
Cement Masons	Grouting of all Tilt-up Panels	$81.36	**15J**	**4U**	**View**

Cement Masons	Gunite Nozzleman	$81.87	**15J**	**4U**	**View**
Cement Masons	Hand Powered Grinder	$81.87	**15J**	**4U**	**View**
Cement Masons	Journey Level	$81.36	**15J**	**4U**	**View**
Cement Masons	Patching Concrete	$81.36	**15J**	**4U**	**View**
Cement Masons	Pneumatic Power Tools	$81.87	**15J**	**4U**	**View**
Cement Masons	Power Chipping & Brushing	$81.87	**15J**	**4U**	**View**
Cement Masons	Sand Blasting Architectural Finish	$81.87	**15J**	**4U**	**View**
Cement Masons	Screed & Rodding Machine	$81.87	**15J**	**4U**	**View**
Cement Masons	Spackling or Skim Coat Concrete	$81.36	**15J**	**4U**	**View**
Cement Masons	Troweling Machine Operator	$81.87	**15J**	**4U**	**View**
Cement Masons	Troweling Machine Operator on Colored Slabs	$81.87	**15J**	**4U**	**View**
Cement Masons	Tunnel Workers	$81.87	**15J**	**4U**	**View**

Divers & Tenders	Bell/Vehicle/ Submersible Operator (not under pressure)	$144.72	**15J**	**11T**	**9I**	**View**
Divers & Tenders	Dive Supervisor	$146.22	**15J**	**11T**	**9I**	**View**
Divers & Tenders	Diver	$144.72	**15J**	**11T**	**9I**	**View**
Divers & Tenders	Diver Tender	$91.05	**15J**	**11T**	**9I**	**View**
Divers & Tenders	Hyperbaric Worker - Compressed Air Worker 0-30.00 PSI	$114.73	**15J**	**11U**		**View**
Divers & Tenders	Hyperbaric Worker - Compressed Air Worker 30.01-44.00 PSI	$124.28	**15J**	**11U**		**View**
Divers & Tenders	Hyperbaric Worker - Compressed Air Worker 44.01 - 54.00 PSI	$133.82	**15J**	**11U**		**View**

Divers & Tenders	Hyperbaric Worker - Compressed Air Worker 54.01 - 60.00 PSI	$143.37	**15J**	**11U**	**View**
Divers & Tenders	Hyperbaric Worker - Compressed Air Worker 60.01 - 64.00 PSI	$152.91	**15J**	**11U**	**View**
Divers & Tenders	Hyperbaric Worker - Compressed Air Worker 64.01 - 68.00 PSI	$162.46	**15J**	**11U**	**View**
Divers & Tenders	Hyperbaric Worker - Compressed Air Worker 68.01 - 70.00 PSI	$172.00	**15J**	**11U**	**View**
Divers & Tenders	Hyperbaric Worker - Compressed Air Worker 70.01 - 72.00 PSI	$181.55	**15J**	**11U**	**View**
Divers & Tenders	Hyperbaric Worker - Compressed Air Worker 72.01 -	$191.09	**15J**	**11U**	**View**

	74.00 PSI					
Divers & Tenders	Lead Diver (Dive Master)	$105.51	**15J**	**11T**	**9I**	**View**
Divers & Tenders	Manifold Operator (Life Support Technician)	$96.05	**15J**	**11U**	**9I**	**View**
Divers & Tenders	Remote Operated Vehicle Operator/ Technician	$91.05	**15J**	**11T**	**9I**	**View**
Divers & Tenders	Remote Operated Vehicle Operator/ Technician	$91.05	**15J**	**11U**	**9I**	**View**
Divers & Tenders	Remote Operated Vehicle Tender	$84.75	**15J**	**11T**	**9I**	**View**
Divers & Tenders	Stand-by Diver	$100.51	**15J**	**11T**	**9I**	**View**
Dredge Workers	Assistant Engineer	$89.47	**5D**	**3F**		**View**
Dredge Workers	Assistant Mate (Deckhand)	$88.78	**5D**	**3F**		**View**
Dredge Workers	Boatmen	$89.47	**5D**	**3F**		**View**
Dredge Workers	Engineer Welder	$91.20	**5D**	**3F**		**View**
Dredge Workers	Leverman, Hydraulic	$93.03	**5D**	**3F**		**View**

Dredge Workers	Mates	$89.47	**5D**	**3F**	**View**
Dredge Workers	Oiler	$88.78	**5D**	**3F**	**View**
Drywall Applicator	Journey Level	$81.71	**15O**	**11S**	**View**
Drywall Tapers	Journey Level	$81.71	**15O**	**11S**	**View**
Electrical Fixture Maintenance Workers	Journey Level	$17.13		**1**	**View**
Electricians - Inside	Cable Splicer	$100.52	**7H**	**1E**	**View**
Electricians - Inside	Construction Stock Person	$48.08	**7H**	**1D**	**View**
Electricians - Inside	Journey Level	$94.06	**7H**	**1E**	**View**
Electricians - Motor Shop	Craftsman	$17.13		**1**	**View**
Electricians - Motor Shop	Journey Level	$17.13		**1**	**View**
Electricians - Powerline Construction	Cable Splicer	$107.31	**5A**	**4D**	**View**
Electricians - Powerline Construction	Certified Line Welder	$98.45	**5A**	**4D**	**View**
Electricians - Powerline	Groundperson	$61.75	**5A**	**4D**	**View**

Construction						
Electricians - Powerline Construction	Heavy Line Equipment Operator	$98.45	**5A**	**4D**		**View**
Electricians - Powerline Construction	Journey Level Lineperson	$98.45	**5A**	**4D**		**View**
Electricians - Powerline Construction	Line Equipment Operator	$84.18	**5A**	**4D**		**View**
Electricians - Powerline Construction	Meter Installer	$61.75	**5A**	**4D**	**8W**	**View**
Electricians - Powerline Construction	Pole Sprayer	$98.45	**5A**	**4D**		**View**
Electricians - Powerline Construction	Powderperson	$72.81	**5A**	**4D**		**View**
Electronic Technicians	Electronic Technicians Journey Level	$62.05	**5B**	**1B**		**View**
Elevator Constructors	Mechanic	$119.17	**7D**	**4A**		**View**
Elevator Constructors	Mechanic In Charge	$128.95	**7D**	**4A**		**View**

Fabricated Precast Concrete Products	Journey Level	$17.13		1		View
Fabricated Precast Concrete Products	Journey Level - In-Factory Work Only	$17.13		1		View
Fence Erectors	Fence Erector	$57.66	15J	11P	8Y	View
Fence Erectors	Fence Laborer	$57.66	15J	11P	8Y	View
Flaggers	Journey Level	$57.66	15J	11P	8Y	View
Glaziers	Journey Level	$85.16	7L	1Y		View
Heat & Frost Insulators And Asbestos Workers	Journey Level	$96.42	15H	11C		View
Heating Equipment Mechanics	Journey Level	$107.92	7F	1E		View
Hod Carriers & Mason Tenders	Journey Level	$71.09	15J	11P	8Y	View
Industrial Power Vacuum Cleaner	Journey Level	$17.13		1		View
Inland Boatmen	Boat Operator	$71.28	5B	1K		View
Inland Boatmen	Cook	$69.70	5B	1K		View
Inland Boatmen	Deckhand	$70.00	5B	1K		View

Inland Boatmen	Deckhand Engineer	$69.55	**5B**	**1K**	**View**
Inland Boatmen	Launch Operator	$71.23	**5B**	**1K**	**View**
Inland Boatmen	Mate	$89.12	**5B**	**1K**	**View**
Inspection/ Cleaning/Sealing Of Sewer & Water Systems By Remote Control	Cleaner Operator	$54.56	**15M**	**110**	**View**
Inspection/ Cleaning/Sealing Of Sewer & Water Systems By Remote Control	Foamer Operator	$54.56	**15M**	**110**	**View**
Inspection/ Cleaning/Sealing Of Sewer & Water Systems By Remote Control	Grout Truck Operator	$54.56	**15M**	**110**	**View**
Inspection/ Cleaning/Sealing Of Sewer & Water Systems By Remote Control	Head Operator	$52.40	**15M**	**110**	**View**
Inspection/ Cleaning/Sealing Of	Technician	$45.97	**15M**	**110**	**View**

Sewer & Water Systems By Remote Control						
Inspection/ Cleaning/Sealing Of Sewer & Water Systems By Remote Control	TV Truck Operator	$49.20	**15M**	**11O**		**View**
Insulation Applicators	Journey Level	$83.21	**15J**	**11U**		**View**
Ironworkers	Journeyman	$94.82	**15K**	**11N**		**View**
Laborers	Air, Gas Or Electric Vibrating Screed	$67.39	**15J**	**11P**	**8Y**	**View**
Laborers	Airtrac Drill Operator	$69.37	**15J**	**11P**	**8Y**	**View**
Laborers	Ballast Regular Machine	$67.39	**15J**	**11P**	**8Y**	**View**
Laborers	Batch Weighman	$57.66	**15J**	**11P**	**8Y**	**View**
Laborers	Brick Pavers	$67.39	**15J**	**11P**	**8Y**	**View**
Laborers	Brush Cutter	$67.39	**15J**	**11P**	**8Y**	**View**
Laborers	Brush Hog Feeder	$67.39	**15J**	**11P**	**8Y**	**View**
Laborers	Burner	$67.39	**15J**	**11P**	**8Y**	**View**

Laborers	Caisson Worker	$69.37	**15J**	**11P**	**8Y**	**View**
Laborers	Carpenter Tender	$67.39	**15J**	**11P**	**8Y**	**View**
Laborers	Cement Dumper-paving	$69.37	**15J**	**11P**	**8Y**	**View**
Laborers	Cement Finisher Tender	$67.39	**15J**	**11P**	**8Y**	**View**
Laborers	Change House Or Dry Shack	$67.39	**15J**	**11P**	**8Y**	**View**
Laborers	Chipping Gun (30 Lbs. And Over)	$68.56	**15J**	**11P**	**8Y**	**View**
Laborers	Chipping Gun (Under 30 Lbs.)	$67.39	**15J**	**11P**	**8Y**	**View**
Laborers	Choker Setter	$67.39	**15J**	**11P**	**8Y**	**View**
Laborers	Chuck Tender	$67.39	**15J**	**11P**	**8Y**	**View**
Laborers	Clary Power Spreader	$68.56	**15J**	**11P**	**8Y**	**View**
Laborers	Clean-up Laborer	$67.39	**15J**	**11P**	**8Y**	**View**
Laborers	Concrete Dumper/Chute Operator	$69.37	**15J**	**11P**	**8Y**	**View**
Laborers	Concrete Form Stripper	$67.39	**15J**	**11P**	**8Y**	**View**

Laborers	Concrete Placement Crew	$69.37	**15J**	**11P**	**8Y**	**View**
Laborers	Concrete Saw Operator/Core Driller	$68.56	**15J**	**11P**	**8Y**	**View**
Laborers	Crusher Feeder	$57.66	**15J**	**11P**	**8Y**	**View**
Laborers	Curing Laborer	$67.39	**15J**	**11P**	**8Y**	**View**
Laborers	Demolition: Wrecking & Moving (Incl. Charred Material)	$67.39	**15J**	**11P**	**8Y**	**View**
Laborers	Ditch Digger	$67.39	**15J**	**11P**	**8Y**	**View**
Laborers	Diver	$69.37	**15J**	**11P**	**8Y**	**View**
Laborers	Drill Operator (Hydraulic, Diamond)	$68.56	**15J**	**11P**	**8Y**	**View**
Laborers	Dry Stack Walls	$67.39	**15J**	**11P**	**8Y**	**View**
Laborers	Dump Person	$67.39	**15J**	**11P**	**8Y**	**View**
Laborers	Epoxy Technician	$67.39	**15J**	**11P**	**8Y**	**View**
Laborers	Erosion Control Worker	$67.39	**15J**	**11P**	**8Y**	**View**

Laborers	Faller & Bucker Chain Saw	$68.56	**15J**	**11P**	**8Y**	**View**
Laborers	Fine Graders	$67.39	**15J**	**11P**	**8Y**	**View**
Laborers	Firewatch	$57.66	**15J**	**11P**	**8Y**	**View**
Laborers	Form Setter	$69.37	**15J**	**11P**	**8Y**	**View**
Laborers	Gabian Basket Builders	$67.39	**15J**	**11P**	**8Y**	**View**
Laborers	General Laborer	$67.39	**15J**	**11P**	**8Y**	**View**
Laborers	Grade Checker & Transit Person	$71.09	**15J**	**11P**	**8Y**	**View**
Laborers	Grinders	$67.39	**15J**	**11P**	**8Y**	**View**
Laborers	Grout Machine Tender	$67.39	**15J**	**11P**	**8Y**	**View**
Laborers	Groutmen (Pressure) Including Post Tension Beams	$68.56	**15J**	**11P**	**8Y**	**View**
Laborers	Guardrail Erector	$67.39	**15J**	**11P**	**8Y**	**View**
Laborers	Hazardous Waste Worker (Level A)	$69.37	**15J**	**11P**	**8Y**	**View**
Laborers	Hazardous Waste Worker (Level B)	$68.56	**15J**	**11P**	**8Y**	**View**

Laborers	Hazardous Waste Worker (Level C)	$67.39	**15J**	**11P**	**8Y**	**View**
Laborers	High Scaler	$69.37	**15J**	**11P**	**8Y**	**View**
Laborers	Jackhammer	$68.56	**15J**	**11P**	**8Y**	**View**
Laborers	Laserbeam Operator	$68.56	**15J**	**11P**	**8Y**	**View**
Laborers	Maintenance Person	$67.39	**15J**	**11P**	**8Y**	**View**
Laborers	Manhole Builder-Mudman	$68.56	**15J**	**11P**	**8Y**	**View**
Laborers	Material Yard Person	$67.39	**15J**	**11P**	**8Y**	**View**
Laborers	Mold Abatement Worker	$67.39	**15J**	**11P**	**8Y**	**View**
Laborers	Motorman-Dinky Locomotive	$71.19	**15J**	**11P**	**8Y**	**View**
Laborers	nozzleman (concrete pump, green cutter when using combination of high pressure air & water on concrete & rock, sandblast, gunite, shotcrete, water	$71.09	**15J**	**11P**	**8Y**	**View**

	blaster, vacuum blaster)					
Laborers	Pavement Breaker	$68.56	**15J**	**11P**	**8Y**	**View**
Laborers	Pilot Car	$57.66	**15J**	**11P**	**8Y**	**View**
Laborers	Pipe Layer (Lead)	$71.09	**15J**	**11P**	**8Y**	**View**
Laborers	Pipe Layer/Tailor	$68.56	**15J**	**11P**	**8Y**	**View**
Laborers	Pipe Pot Tender	$68.56	**15J**	**11P**	**8Y**	**View**
Laborers	Pipe Reliner	$68.56	**15J**	**11P**	**8Y**	**View**
Laborers	Pipe Wrapper	$68.56	**15J**	**11P**	**8Y**	**View**
Laborers	Pot Tender	$67.39	**15J**	**11P**	**8Y**	**View**
Laborers	Powderman	$69.37	**15J**	**11P**	**8Y**	**View**
Laborers	Powderman's Helper	$67.39	**15J**	**11P**	**8Y**	**View**
Laborers	Power Jacks	$68.56	**15J**	**11P**	**8Y**	**View**
Laborers	Power Washer	$67.39	**15J**	**11P**	**8Y**	**View**
Laborers	Railroad Spike Puller - Power	$68.56	**15J**	**11P**	**8Y**	**View**
Laborers	Raker - Asphalt	$71.09	**15J**	**11P**	**8Y**	**View**

Laborers	Re-timberman	$69.37	**15J**	**11P**	**8Y**	**View**
Laborers	Remote Equipment Operator	$68.56	**15J**	**11P**	**8Y**	**View**
Laborers	Rigger/Signal Person	$68.56	**15J**	**11P**	**8Y**	**View**
Laborers	Rip Rap Person	$67.39	**15J**	**11P**	**8Y**	**View**
Laborers	Rivet Buster	$68.56	**15J**	**11P**	**8Y**	**View**
Laborers	Rodder	$69.37	**15J**	**11P**	**8Y**	**View**
Laborers	Scaffold Erector	$67.39	**15J**	**11P**	**8Y**	**View**
Laborers	Scale Person	$67.39	**15J**	**11P**	**8Y**	**View**
Laborers	Sloper (Over 20")	$68.56	**15J**	**11P**	**8Y**	**View**
Laborers	Sloper Sprayer	$67.39	**15J**	**11P**	**8Y**	**View**
Laborers	Spreader (Concrete)	$69.37	**15J**	**11P**	**8Y**	**View**
Laborers	Stake Hopper	$67.39	**15J**	**11P**	**8Y**	**View**
Laborers	Stock Piler	$67.39	**15J**	**11P**	**8Y**	**View**
Laborers	Swinging Stage/ Boatswain Chair	$57.66	**15J**	**11P**	**8Y**	**View**
Laborers	Tamper & Similar Electric, Air & Gas	$68.56	**15J**	**11P**	**8Y**	**View**

	Operated Tools					
Laborers	Tamper (Multiple & Self-propelled)	$68.56	**15J**	**11P**	**8Y**	**View**
Laborers	Timber Person - Sewer (Lagger, Shorer & Cribber)	$68.56	**15J**	**11P**	**8Y**	**View**
Laborers	Toolroom Person (at Jobsite)	$67.39	**15J**	**11P**	**8Y**	**View**
Laborers	Topper	$67.39	**15J**	**11P**	**8Y**	**View**
Laborers	Track Laborer	$67.39	**15J**	**11P**	**8Y**	**View**
Laborers	Track Liner (Power)	$68.56	**15J**	**11P**	**8Y**	**View**
Laborers	Traffic Control Laborer	$61.41	**15J**	**11P**	**9C**	**View**
Laborers	Traffic Control Supervisor	$64.86	**15J**	**11P**	**9C**	**View**
Laborers	Truck Mounted Attenuator	$61.41	**15J**	**11P**	**9C**	**View**
Laborers	Truck Spotter	$67.39	**15J**	**11P**	**8Y**	**View**
Laborers	Tugger Operator	$68.56	**15J**	**11P**	**8Y**	**View**
Laborers	Tunnel Work-Compressed Air Worker 0-30 psi	$225.32	**15J**	**11P**	**9B**	**View**

Laborers	Tunnel Work- Compressed Air Worker 30.01-44.00 psi	$230.35	**15J**	**11P**	**9B**	**View**
Laborers	Tunnel Work- Compressed Air Worker 44.01-54.00 psi	$234.03	**15J**	**11P**	**9B**	**View**
Laborers	Tunnel Work- Compressed Air Worker 54.01-60.00 psi	$239.73	**15J**	**11P**	**9B**	**View**
Laborers	Tunnel Work- Compressed Air Worker 60.01-64.00 psi	$241.85	**15J**	**11P**	**9B**	**View**
Laborers	Tunnel Work- Compressed Air Worker 64.01-68.00 psi	$246.95	**15J**	**11P**	**9B**	**View**
Laborers	Tunnel Work- Compressed Air Worker 68.01-70.00 psi	$248.85	**15J**	**11P**	**9B**	**View**
Laborers	Tunnel Work- Compressed Air Worker 70.01-72.00 psi	$250.85	**15J**	**11P**	**9B**	**View**

Laborers	Tunnel Work-Compressed Air Worker 72.01-74.00 psi	$252.85	**15J**	**11P**	**9B**	**View**
Laborers	Tunnel Work-Guage and Lock Tender	$71.19	**15J**	**11P**	**8Y**	**View**
Laborers	Tunnel Work-Miner	$71.19	**15J**	**11P**	**8Y**	**View**
Laborers	Vibrator	$69.37	**15J**	**11P**	**8Y**	**View**
Laborers	Vinyl Seamer	$67.39	**15J**	**11P**	**8Y**	**View**
Laborers	Watchman	$52.73	**15J**	**11P**	**8Y**	**View**
Laborers	Welder	$68.56	**15J**	**11P**	**8Y**	**View**
Laborers	Well Point Laborer	$68.56	**15J**	**11P**	**8Y**	**View**
Laborers	Window Washer/ Cleaner	$52.73	**15J**	**11P**	**8Y**	**View**
Laborers - Underground Sewer & Water	General Laborer & Topman	$67.39	**15J**	**11P**	**8Y**	**View**
Laborers - Underground Sewer & Water	Pipe Layer	$68.56	**15J**	**11P**	**8Y**	**View**

Landscape Construction	Landscape Construction/ Landscaping Or Planting Laborers	$52.73	**15J**	**11P**	**8Y**	**View**
Landscape Construction	Landscape Operator	$91.81	**15J**	**11G**	**8X**	**View**
Landscape Maintenance	Groundskeeper	$17.13		**1**		**View**
Lathers	Journey Level	$81.71	**15O**	**11S**		**View**
Marble Setters	Journey Level	$76.07	**7E**	**1N**		**View**
Metal Fabrication (In Shop)	Journey Level	$37.56	**0**	**11D**		**View**
Millwright	Journey Level	$80.28	**15J**	**4C**		**View**
Modular Buildings	Journey Level	$17.13		**1**		**View**
Painters	Journey Level	$57.46	**6Z**	**11J**		**View**
Pile Driver	Crew Tender	$80.50	**15J**	**11U**	**9L**	**View**
Pile Driver	Journey Level	$84.81	**15J**	**11U**		**View**
Plasterers	Journey Level	$78.60	**7Q**	**1R**		**View**
Plasterers	Nozzleman	$82.70	**7Q**	**1R**		**View**
Playground & Park Equipment Installers	Journey Level	$17.13		**1**		**View**

Plumbers & Pipefitters	Journey Level	$95.37	**5A**	**1G**		**View**
Power Equipment Operators	Asphalt Plant Operators	$93.36	**15J**	**11G**	**8X**	**View**
Power Equipment Operators	Assistant Engineer	$87.77	**15J**	**11G**	**8X**	**View**
Power Equipment Operators	Barrier Machine (zipper)	$92.52	**15J**	**11G**	**8X**	**View**
Power Equipment Operators	Batch Plant Operator: concrete	$92.52	**15J**	**11G**	**8X**	**View**
Power Equipment Operators	Boat Operator	$92.08	**7A**	**11H**	**8X**	**View**
Power Equipment Operators	Bobcat	$87.77	**15J**	**11G**	**8X**	**View**
Power Equipment Operators	Brokk - Remote Demolition Equipment	$87.77	**15J**	**11G**	**8X**	**View**
Power Equipment Operators	Brooms	$87.77	**15J**	**11G**	**8X**	**View**
Power Equipment Operators	Bump Cutter	$92.52	**15J**	**11G**	**8X**	**View**
Power Equipment Operators	Cableways	$93.36	**15J**	**11G**	**8X**	**View**
Power Equipment	Chipper	$92.52	**15J**	**11G**	**8X**	**View**

Operators						
Power Equipment Operators	Compressor	$87.77	**15J**	**11G**	**8X**	**View**
Power Equipment Operators	Concrete Finish Machine - Laser Screed	$87.77	**15J**	**11G**	**8X**	**View**
Power Equipment Operators	Concrete Pump - Mounted Or Trailer High Pressure Line Pump, Pump High Pressure	$91.81	**15J**	**11G**	**8X**	**View**
Power Equipment Operators	Concrete Pump: Truck Mount With Boom Attachment Over 42 M	$93.36	**15J**	**11G**	**8X**	**View**
Power Equipment Operators	Concrete Pump: Truck Mount With Boom Attachment Up To 42m	$92.52	**15J**	**11G**	**8X**	**View**
Power Equipment Operators	Conveyors	$91.81	**15J**	**11G**	**8X**	**View**
Power Equipment Operators	Cranes Friction: 200 tons and over	$94.85	**7A**	**11H**	**8X**	**View**

Power Equipment Operators	Cranes, A-frame: 10 tons and under	$86.60	**7A**	**11H**	**8X**	**View**
Power Equipment Operators	Cranes: 100 tons through 199 tons, or 150' of boom (including jib with attachments)	$92.98	**7A**	**11H**	**8X**	**View**
Power Equipment Operators	Cranes: 20 tons through 44 tons with attachments	$91.25	**7A**	**11H**	**8X**	**View**
Power Equipment Operators	Cranes: 200 tons-299 tons, or 250' of boom including jib with attachments	$93.95	**7A**	**11H**	**8X**	**View**
Power Equipment Operators	Cranes: 300 tons and over or 300' of boom including jib with attachments	$94.85	**7A**	**11H**	**8X**	**View**
Power Equipment Operators	Cranes: 45 tons through 99 tons, under 150' of boom(including jib with attachments)	$92.08	**7A**	**11H**	**8X**	**View**
Power Equipment Operators	Cranes: Friction cranes through	$93.95	**7A**	**11H**	**8X**	**View**

	199 tons					
Power Equipment Operators	Cranes: through 19 tons with attachments, a-frame over 10 tons	$90.55	**7A**	**11H**	**8X**	**View**
Power Equipment Operators	Crusher	$92.52	**15J**	**11G**	**8X**	**View**
Power Equipment Operators	Deck Engineer/ Deck Winches (power)	$92.52	**15J**	**11G**	**8X**	**View**
Power Equipment Operators	Derricks, On Building Work	$92.08	**7A**	**11H**	**8X**	**View**
Power Equipment Operators	Dozers D-9 & Under	$91.81	**15J**	**11G**	**8X**	**View**
Power Equipment Operators	Drill Oilers: Auger Type, Truck Or Crane Mount	$91.81	**15J**	**11G**	**8X**	**View**
Power Equipment Operators	Drilling Machine	$94.30	**15J**	**11G**	**8X**	**View**
Power Equipment Operators	Elevator and man-lift: permanent and shaft type	$87.77	**15J**	**11G**	**8X**	**View**
Power Equipment Operators	Finishing Machine, Bidwell And Gamaco & Similar	$92.52	**15J**	**11G**	**8X**	**View**

	Equipment					
Power Equipment Operators	Forklift: 3000 lbs and over with attachments	$91.81	**15J**	**11G**	**8X**	**View**
Power Equipment Operators	Forklifts: under 3000 lbs. with attachments	$87.77	**15J**	**11G**	**8X**	**View**
Power Equipment Operators	Grade Engineer: Using Blue Prints, Cut Sheets, Etc	$92.52	**15J**	**11G**	**8X**	**View**
Power Equipment Operators	Gradechecker/ Stakeman	$87.77	**15J**	**11G**	**8X**	**View**
Power Equipment Operators	Guardrail Punch	$92.52	**15J**	**11G**	**8X**	**View**
Power Equipment Operators	Hard Tail End Dump Articulating Off- Road Equipment 45 Yards. & Over	$93.36	**15J**	**11G**	**8X**	**View**
Power Equipment Operators	Hard Tail End Dump Articulating Off-road Equipment Under 45 Yards	$92.52	**15J**	**11G**	**8X**	**View**
Power Equipment Operators	Horizontal/ Directional Drill Locator	$91.81	**15J**	**11G**	**8X**	**View**

Power Equipment Operators	Horizontal/ Directional Drill Operator	$92.52	**15J**	**11G**	**8X**	**View**
Power Equipment Operators	Hydralifts/Boom Trucks Over 10 Tons	$90.55	**7A**	**11H**	**8X**	**View**
Power Equipment Operators	Hydralifts/boom trucks: 10 tons and under	$86.60	**7A**	**11H**	**8X**	**View**
Power Equipment Operators	Leverman	$95.28	**15J**	**11G**	**8X**	**View**
Power Equipment Operators	Loader, Overhead, 6 Yards. But Not Including 8 Yards	$93.36	**15J**	**11G**	**8X**	**View**
Power Equipment Operators	Loaders, Overhead Under 6 Yards	$92.52	**15J**	**11G**	**8X**	**View**
Power Equipment Operators	Loaders, Plant Feed	$92.52	**15J**	**11G**	**8X**	**View**
Power Equipment Operators	Loaders: Elevating Type Belt	$91.81	**15J**	**11G**	**8X**	**View**
Power Equipment Operators	Locomotives, All	$92.52	**15J**	**11G**	**8X**	**View**
Power Equipment Operators	Material Transfer Device	$92.52	**15J**	**11G**	**8X**	**View**

Power Equipment Operators	Mechanics: All (Leadmen - $0.50 per hour over mechanic)	$94.30	**15J**	**11G**	**8X**	**View**
Power Equipment Operators	Motor Patrol Graders	$93.36	**15J**	**11G**	**8X**	**View**
Power Equipment Operators	Mucking Machine, Mole, Tunnel Drill, Boring, Road Header And/or Shield	$93.36	**15J**	**11G**	**8X**	**View**
Power Equipment Operators	Oil Distributors, Blower Distribution & Mulch Seeding Operator	$87.77	**15J**	**11G**	**8X**	**View**
Power Equipment Operators	Outside Hoists (Elevators and Manlifts), Air Tuggers, Strato	$91.81	**15J**	**11G**	**8X**	**View**
Power Equipment Operators	Overhead, bridge type Crane: 20 tons through 44 tons	$91.25	**7A**	**11H**	**8X**	**View**
Power Equipment Operators	Overhead, bridge type: 100 tons and over	$92.98	**7A**	**11H**	**8X**	**View**

Power Equipment Operators	Overhead, bridge type: 45 tons through 99 tons	$92.08	**7A**	**11H**	**8X**	**View**
Power Equipment Operators	Pavement Breaker	$87.77	**15J**	**11G**	**8X**	**View**
Power Equipment Operators	Pile Driver (other Than Crane Mount)	$92.52	**15J**	**11G**	**8X**	**View**
Power Equipment Operators	Plant Oiler - Asphalt, Crusher	$91.81	**15J**	**11G**	**8X**	**View**
Power Equipment Operators	Posthole Digger, Mechanical	$87.77	**15J**	**11G**	**8X**	**View**
Power Equipment Operators	Power Plant	$87.77	**15J**	**11G**	**8X**	**View**
Power Equipment Operators	Pumps - Water	$87.77	**15J**	**11G**	**8X**	**View**
Power Equipment Operators	Quad 9, Hd 41, D10 And Over	$93.36	**15J**	**11G**	**8X**	**View**
Power Equipment Operators	Quick Tower: no cab, under 100 feet in height base to boom	$92.52	**15J**	**11G**	**8X**	**View**
Power Equipment Operators	Remote Control Operator On Rubber Tired Earth Moving	$93.36	**15J**	**11G**	**8X**	**View**

	Equipment					
Power Equipment Operators	Rigger and Bellman	$86.60	**7A**	**11H**	**8X**	**View**
Power Equipment Operators	Rigger/Signal Person, Bellman(Certified)	$90.55	**7A**	**11H**	**8X**	**View**
Power Equipment Operators	Rollagon	$93.36	**15J**	**11G**	**8X**	**View**
Power Equipment Operators	Roller, Other Than Plant Mix	$87.77	**15J**	**11G**	**8X**	**View**
Power Equipment Operators	Roller, Plant Mix Or Multi-lift Materials	$91.81	**15J**	**11G**	**8X**	**View**
Power Equipment Operators	Roto-mill, Roto-grinder	$92.52	**15J**	**11G**	**8X**	**View**
Power Equipment Operators	Saws - Concrete	$91.81	**15J**	**11G**	**8X**	**View**
Power Equipment Operators	Scraper, Self Propelled Under 45 Yards	$92.52	**15J**	**11G**	**8X**	**View**
Power Equipment Operators	Scrapers - Concrete & Carry All	$91.81	**15J**	**11G**	**8X**	**View**
Power Equipment Operators	Scrapers, Self-propelled: 45 Yards And Over	$93.36	**15J**	**11G**	**8X**	**View**

Power Equipment Operators	Service Engineers: Equipment	$91.81	**15J**	**11G**	**8X**	**View**
Power Equipment Operators	Shotcrete/Gunite Equipment	$87.77	**15J**	**11G**	**8X**	**View**
Power Equipment Operators	Shovel, Excavator, Backhoe, Tractors Under 15 Metric Tons	$91.81	**15J**	**11G**	**8X**	**View**
Power Equipment Operators	Shovel, Excavator, Backhoe: Over 30 Metric Tons To 50 Metric Tons	$93.36	**15J**	**11G**	**8X**	**View**
Power Equipment Operators	Shovel, Excavator, Backhoes, Tractors: 15 To 30 Metric Tons	$92.52	**15J**	**11G**	**8X**	**View**
Power Equipment Operators	Shovel, Excavator, Backhoes: Over 50 Metric Tons To 90 Metric Tons	$94.30	**15J**	**11G**	**8X**	**View**
Power Equipment Operators	Shovel, Excavator, Backhoes: Over 90 Metric Tons	$95.28	**15J**	**11G**	**8X**	**View**
Power Equipment Operators	Slipform Pavers	$93.36	**15J**	**11G**	**8X**	**View**

Power Equipment Operators	Spreader, Topsider & Screedman	$93.36	**15J**	**11G**	**8X**	**View**
Power Equipment Operators	Subgrader Trimmer	$92.52	**15J**	**11G**	**8X**	**View**
Power Equipment Operators	Tower Bucket Elevators	$91.81	**15J**	**11G**	**8X**	**View**
Power Equipment Operators	Tower Crane: over 175' through 250' in height, base to boom	$93.95	**7A**	**11H**	**8X**	**View**
Power Equipment Operators	Tower crane: up to 175' in height base to boom	$92.98	**7A**	**11H**	**8X**	**View**
Power Equipment Operators	Tower Cranes: over 250' in height from base to boom	$94.85	**7A**	**11H**	**8X**	**View**
Power Equipment Operators	Transporters, All Track Or Truck Type	$93.36	**15J**	**11G**	**8X**	**View**
Power Equipment Operators	Trenching Machines	$91.81	**15J**	**11G**	**8X**	**View**
Power Equipment Operators	Truck Crane Oiler/ Driver: 100 tons and over	$91.25	**7A**	**11H**	**8X**	**View**

Power Equipment Operators	Truck crane oiler/ driver: under 100 tons	$90.55	**7A**	**11H**	**8X**	**View**
Power Equipment Operators	Truck Mount Portable Conveyor	$92.52	**15J**	**11G**	**8X**	**View**
Power Equipment Operators	Vac Truck (Vactor Guzzler, Hydro Excavator)	$92.52	**15J**	**11G**	**8X**	**View**
Power Equipment Operators	Welder	$93.36	**15J**	**11G**	**8X**	**View**
Power Equipment Operators	Wheel Tractors, Farmall Type	$87.77	**15J**	**11G**	**8X**	**View**
Power Equipment Operators	Yo Yo Pay Dozer	$92.52	**15J**	**11G**	**8X**	**View**
Power Equipment Operators- Underground Sewer & Water	Asphalt Plant Operators	$93.36	**15J**	**11G**	**8X**	**View**
Power Equipment Operators- Underground Sewer & Water	Assistant Engineer	$87.77	**15J**	**11G**	**8X**	**View**

Power Equipment Operators-Underground Sewer & Water	Barrier Machine (zipper)	$92.52	**15J**	**11G**	**8X**	**View**
Power Equipment Operators-Underground Sewer & Water	Batch Plant Operator, Concrete	$92.52	**15J**	**11G**	**8X**	**View**
Power Equipment Operators-Underground Sewer & Water	Boat Operator	$92.08	**7A**	**11H**	**8X**	**View**
Power Equipment Operators-Underground Sewer & Water	Bobcat	$87.77	**15J**	**11G**	**8X**	**View**
Power Equipment Operators-Underground Sewer & Water	Brokk - Remote Demolition Equipment	$87.77	**15J**	**11G**	**8X**	**View**
Power Equipment Operators-Underground Sewer & Water	Brooms	$87.77	**15J**	**11G**	**8X**	**View**
Power Equipment Operators-Underground Sewer	Bump Cutter	$92.52	**15J**	**11G**	**8X**	**View**

& Water						
Power Equipment Operators- Underground Sewer & Water	Cableways	$93.36	**15J**	**11G**	**8X**	**View**
Power Equipment Operators- Underground Sewer & Water	Chipper	$92.52	**15J**	**11G**	**8X**	**View**
Power Equipment Operators- Underground Sewer & Water	Compressor	$87.77	**15J**	**11G**	**8X**	**View**
Power Equipment Operators- Underground Sewer & Water	Concrete Finish Machine - Laser Screed	$87.77	**15J**	**11G**	**8X**	**View**
Power Equipment Operators- Underground Sewer & Water	Concrete Pump - Mounted Or Trailer High Pressure Line Pump, Pump High Pressure	$91.81	**15J**	**11G**	**8X**	**View**
Power Equipment Operators- Underground Sewer & Water	Concrete Pump: Truck Mount With Boom Attachment Over 42 M	$93.36	**15J**	**11G**	**8X**	**View**

Power Equipment Operators-Underground Sewer & Water	Concrete Pump: Truck Mount With Boom Attachment Up To 42m	$92.52	**15J**	**11G**	**8X**	**View**
Power Equipment Operators-Underground Sewer & Water	Conveyors	$91.81	**15J**	**11G**	**8X**	**View**
Power Equipment Operators-Underground Sewer & Water	Cranes Friction: 200 tons and over	$94.85	**7A**	**11H**	**8X**	**View**
Power Equipment Operators-Underground Sewer & Water	Cranes, A-frame: 10 tons and under	$86.60	**7A**	**11H**	**8X**	**View**
Power Equipment Operators-Underground Sewer & Water	Cranes: 100 tons through 199 tons, or 150' of boom (including jib with attachments)	$92.98	**7A**	**11H**	**8X**	**View**
Power Equipment Operators-Underground Sewer & Water	Cranes: 20 tons through 44 tons with attachments	$91.25	**7A**	**11H**	**8X**	**View**
Power Equipment Operators-	Cranes: 200 tons-299 tons, or 250'	$93.95	**7A**	**11H**	**8X**	**View**

Underground Sewer & Water	of boom including jib with attachments					
Power Equipment Operators-Underground Sewer & Water	Cranes: 300 tons and over or 300' of boom including jib with attachments	$94.85	**7A**	**11H**	**8X**	**View**
Power Equipment Operators-Underground Sewer & Water	Cranes: 45 tons through 99 tons, under 150' of boom(including jib with attachments)	$92.08	**7A**	**11H**	**8X**	**View**
Power Equipment Operators-Underground Sewer & Water	Cranes: Friction cranes through 199 tons	$93.95	**7A**	**11H**	**8X**	**View**
Power Equipment Operators-Underground Sewer & Water	Cranes: through 19 tons with attachments, a-frame over 10 tons	$90.55	**7A**	**11H**	**8X**	**View**
Power Equipment Operators-Underground Sewer & Water	Crusher	$92.52	**15J**	**11G**	**8X**	**View**
Power Equipment	Deck Engineer/	$92.52	**15J**	**11G**	**8X**	**View**

Operators-Underground Sewer & Water	Deck Winches (power)					
Power Equipment Operators-Underground Sewer & Water	Derricks, On Building Work	$92.08	**7A**	**11H**	**8X**	**View**
Power Equipment Operators-Underground Sewer & Water	Dozers D-9 & Under	$91.81	**15J**	**11G**	**8X**	**View**
Power Equipment Operators-Underground Sewer & Water	Drill Oilers: Auger Type, Truck Or Crane Mount	$91.81	**15J**	**11G**	**8X**	**View**
Power Equipment Operators-Underground Sewer & Water	Drilling Machine	$94.30	**15J**	**11G**	**8X**	**View**
Power Equipment Operators-Underground Sewer & Water	Elevator and man-lift: permanent and shaft type	$87.77	**15J**	**11G**	**8X**	**View**
Power Equipment Operators-Underground Sewer & Water	Finishing Machine, Bidwell And Gamaco & Similar Equipment	$92.52	**15J**	**11G**	**8X**	**View**

Power Equipment Operators-Underground Sewer & Water	Forklift: 3000 lbs and over with attachments	$91.81	**15J**	**11G**	**8X**	**View**
Power Equipment Operators-Underground Sewer & Water	Forklifts: under 3000 lbs. with attachments	$87.77	**15J**	**11G**	**8X**	**View**
Power Equipment Operators-Underground Sewer & Water	Grade Engineer: Using Blue Prints, Cut Sheets, Etc	$92.52	**15J**	**11G**	**8X**	**View**
Power Equipment Operators-Underground Sewer & Water	Gradechecker/ Stakeman	$87.77	**15J**	**11G**	**8X**	**View**
Power Equipment Operators-Underground Sewer & Water	Guardrail Punch	$92.52	**15J**	**11G**	**8X**	**View**
Power Equipment Operators-Underground Sewer & Water	Hard Tail End Dump Articulating Off- Road Equipment 45 Yards. & Over	$93.36	**15J**	**11G**	**8X**	**View**
Power Equipment Operators-Underground Sewer	Hard Tail End Dump Articulating Off-road	$92.52	**15J**	**11G**	**8X**	**View**

& Water	Equipment Under 45 Yards					
Power Equipment Operators-Underground Sewer & Water	Horizontal/ Directional Drill Locator	$91.81	**15J**	**11G**	**8X**	**View**
Power Equipment Operators-Underground Sewer & Water	Horizontal/ Directional Drill Operator	$92.52	**15J**	**11G**	**8X**	**View**
Power Equipment Operators-Underground Sewer & Water	Hydralifts/boom trucks: 10 tons and under	$86.60	**7A**	**11H**	**8X**	**View**
Power Equipment Operators-Underground Sewer & Water	Hydralifts/boom trucks: over 10 tons	$90.55	**7A**	**11H**	**8X**	**View**
Power Equipment Operators-Underground Sewer & Water	Leverman	$95.28	**15J**	**11G**	**8X**	**View**
Power Equipment Operators-Underground Sewer & Water	Loader, Overhead, 6 Yards. But Not Including 8 Yards	$93.36	**15J**	**11G**	**8X**	**View**
Power Equipment	Loaders,	$92.52	**15J**	**11G**	**8X**	**View**

Operators-Underground Sewer & Water	Overhead Under 6 Yards					
Power Equipment Operators-Underground Sewer & Water	Loaders, Plant Feed	$92.52	**15J**	**11G**	**8X**	**View**
Power Equipment Operators-Underground Sewer & Water	Loaders: Elevating Type Belt	$91.81	**15J**	**11G**	**8X**	**View**
Power Equipment Operators-Underground Sewer & Water	Locomotives, All	$92.52	**15J**	**11G**	**8X**	**View**
Power Equipment Operators-Underground Sewer & Water	Material Transfer Device	$92.52	**15J**	**11G**	**8X**	**View**
Power Equipment Operators-Underground Sewer & Water	Mechanics: All (Leadmen - $0.50 per hour over mechanic)	$94.30	**15J**	**11G**	**8X**	**View**
Power Equipment Operators-Underground Sewer & Water	Motor Patrol Graders	$93.36	**15J**	**11G**	**8X**	**View**

Power Equipment Operators-Underground Sewer & Water	Mucking Machine, Mole, Tunnel Drill, Boring, Road Header And/or Shield	$93.36	**15J**	**11G**	**8X**	**View**
Power Equipment Operators-Underground Sewer & Water	Oil Distributors, Blower Distribution & Mulch Seeding Operator	$87.77	**15J**	**11G**	**8X**	**View**
Power Equipment Operators-Underground Sewer & Water	Outside Hoists (Elevators and Manlifts), Air Tuggers, Strato	$91.81	**15J**	**11G**	**8X**	**View**
Power Equipment Operators-Underground Sewer & Water	Overhead, bridge type Crane: 20 tons through 44 tons	$91.25	**7A**	**11H**	**8X**	**View**
Power Equipment Operators-Underground Sewer & Water	Overhead, bridge type: 100 tons and over	$92.98	**7A**	**11H**	**8X**	**View**
Power Equipment Operators-Underground Sewer & Water	Overhead, bridge type: 45 tons through 99 tons	$92.08	**7A**	**11H**	**8X**	**View**

Power Equipment Operators-Underground Sewer & Water	Pavement Breaker	$87.77	**15J**	**11G**	**8X**	**View**
Power Equipment Operators-Underground Sewer & Water	Pile Driver (other Than Crane Mount)	$92.52	**15J**	**11G**	**8X**	**View**
Power Equipment Operators-Underground Sewer & Water	Plant Oiler - Asphalt, Crusher	$91.81	**15J**	**11G**	**8X**	**View**
Power Equipment Operators-Underground Sewer & Water	Posthole Digger, Mechanical	$87.77	**15J**	**11G**	**8X**	**View**
Power Equipment Operators-Underground Sewer & Water	Power Plant	$87.77	**15J**	**11G**	**8X**	**View**
Power Equipment Operators-Underground Sewer & Water	Pumps - Water	$87.77	**15J**	**11G**	**8X**	**View**
Power Equipment Operators-Underground Sewer	Quad 9, Hd 41, D10 And Over	$93.36	**15J**	**11G**	**8X**	**View**

& Water						
Power Equipment Operators-Underground Sewer & Water	Quick Tower: no cab, under 100 feet in height base to boom	$92.52	**15J**	**11G**	**8X**	**View**
Power Equipment Operators-Underground Sewer & Water	Remote Control Operator On Rubber Tired Earth Moving Equipment	$93.36	**15J**	**11G**	**8X**	**View**
Power Equipment Operators-Underground Sewer & Water	Rigger and Bellman	$86.60	**7A**	**11H**	**8X**	**View**
Power Equipment Operators-Underground Sewer & Water	Rigger/Signal Person, Bellman(Certified)	$90.55	**7A**	**11H**	**8X**	**View**
Power Equipment Operators-Underground Sewer & Water	Rollagon	$93.36	**15J**	**11G**	**8X**	**View**
Power Equipment Operators-Underground Sewer & Water	Roller, Other Than Plant Mix	$87.77	**15J**	**11G**	**8X**	**View**
Power Equipment	Roller, Plant Mix	$91.81	**15J**	**11G**	**8X**	**View**

Operators-Underground Sewer & Water	Or Multi-lift Materials					
Power Equipment Operators-Underground Sewer & Water	Roto-mill, Roto-grinder	$92.52	**15J**	**11G**	**8X**	**View**
Power Equipment Operators-Underground Sewer & Water	Saws - Concrete	$91.81	**15J**	**11G**	**8X**	**View**
Power Equipment Operators-Underground Sewer & Water	Scraper, Self Propelled Under 45 Yards	$92.52	**15J**	**11G**	**8X**	**View**
Power Equipment Operators-Underground Sewer & Water	Scrapers - Concrete & Carry All	$91.81	**15J**	**11G**	**8X**	**View**
Power Equipment Operators-Underground Sewer & Water	Scrapers, Self-propelled: 45 Yards And Over	$93.36	**15J**	**11G**	**8X**	**View**
Power Equipment Operators-Underground Sewer & Water	Shotcrete/Gunite Equipment	$87.77	**15J**	**11G**	**8X**	**View**

Power Equipment Operators-Underground Sewer & Water	Shovel, Excavator, Backhoe, Tractors Under 15 Metric Tons	$91.81	**15J**	**11G**	**8X**	**View**
Power Equipment Operators-Underground Sewer & Water	Shovel, Excavator, Backhoe: Over 30 Metric Tons To 50 Metric Tons	$93.36	**15J**	**11G**	**8X**	**View**
Power Equipment Operators-Underground Sewer & Water	Shovel, Excavator, Backhoes, Tractors: 15 To 30 Metric Tons	$92.52	**15J**	**11G**	**8X**	**View**
Power Equipment Operators-Underground Sewer & Water	Shovel, Excavator, Backhoes: Over 50 Metric Tons To 90 Metric Tons	$94.30	**15J**	**11G**	**8X**	**View**
Power Equipment Operators-Underground Sewer & Water	Shovel, Excavator, Backhoes: Over 90 Metric Tons	$95.28	**15J**	**11G**	**8X**	**View**
Power Equipment Operators-Underground Sewer & Water	Slipform Pavers	$93.36	**15J**	**11G**	**8X**	**View**
Power Equipment Operators-Underground Sewer	Spreader, Topsider & Screedman	$93.36	**15J**	**11G**	**8X**	**View**

& Water						
Power Equipment Operators-Underground Sewer & Water	Subgrader Trimmer	$92.52	**15J**	**11G**	**8X**	**View**
Power Equipment Operators-Underground Sewer & Water	Tower Bucket Elevators	$91.81	**15J**	**11G**	**8X**	**View**
Power Equipment Operators-Underground Sewer & Water	Tower Crane: over 175' through 250' in height, base to boom	$93.95	**7A**	**11H**	**8X**	**View**
Power Equipment Operators-Underground Sewer & Water	Tower crane: up to 175' in height base to boom	$92.98	**7A**	**11H**	**8X**	**View**
Power Equipment Operators-Underground Sewer & Water	Tower Cranes: over 250' in height from base to boom	$94.85	**7A**	**11H**	**8X**	**View**
Power Equipment Operators-Underground Sewer & Water	Transporters, All Track Or Truck Type	$93.36	**15J**	**11G**	**8X**	**View**
Power Equipment Operators-	Trenching Machines	$91.81	**15J**	**11G**	**8X**	**View**

Underground Sewer & Water						
Power Equipment Operators-Underground Sewer & Water	Truck Crane Oiler/ Driver: 100 tons and over	$91.25	**7A**	**11H**	**8X**	**View**
Power Equipment Operators-Underground Sewer & Water	Truck crane oiler/ driver: under 100 tons	$90.55	**7A**	**11H**	**8X**	**View**
Power Equipment Operators-Underground Sewer & Water	Truck Mount Portable Conveyor	$92.52	**15J**	**11G**	**8X**	**View**
Power Equipment Operators-Underground Sewer & Water	Vac Truck (Vactor Guzzler, Hydro Excavator)	$92.52	**15J**	**11G**	**8X**	**View**
Power Equipment Operators-Underground Sewer & Water	Welder	$93.36	**15J**	**11G**	**8X**	**View**
Power Equipment Operators-Underground Sewer & Water	Wheel Tractors, Farmall Type	$87.77	**15J**	**11G**	**8X**	**View**
Power Equipment	Yo Yo Pay Dozer	$92.52	**15J**	**11G**	**8X**	**View**

Operators-Underground Sewer & Water					
Power Line Clearance Tree Trimmers	Journey Level In Charge	$69.62	**5A**	**4A**	**View**
Power Line Clearance Tree Trimmers	Spray Person	$65.89	**5A**	**4A**	**View**
Power Line Clearance Tree Trimmers	Tree Equipment Operator	$69.62	**5A**	**4A**	**View**
Power Line Clearance Tree Trimmers	Tree Trimmer	$62.19	**5A**	**4A**	**View**
Power Line Clearance Tree Trimmers	Tree Trimmer Groundperson	$45.93	**5A**	**4A**	**View**
Refrigeration & Air Conditioning Mechanics	Journey Level	$100.71	**5A**	**1G**	**View**
Residential Brick Mason	Journey Level	$22.73		**1**	**View**
Residential Carpenters	Journey Level	$37.17		**1**	**View**
Residential Cement	Journey Level	$81.36	**15J**	**4U**	**View**

Masons					
Residential Drywall Applicators	Journey Level	$51.52	**15J**	**4C**	**View**
Residential Drywall Tapers	Journey Level	$81.31	**5P**	**1E**	**View**
Residential Electricians	Journey Level	$48.80		**1**	**View**
Residential Glaziers	Journey Level	$33.75		**1**	**View**
Residential Insulation Applicators	Journey Level	$37.07		**1**	**View**
Residential Laborers	Journey Level	$28.78		**1**	**View**
Residential Marble Setters	Journey Level	$39.71		**1**	**View**
Residential Painters	Journey Level	$30.60		**1**	**View**
Residential Plumbers & Pipefitters	Journey Level	$51.38		**1**	**View**
Residential Refrigeration & Air Conditioning Mechanics	Journey Level	$107.92	**7F**	**1E**	**View**

Residential Sheet Metal Workers	Journey Level	$107.92	7F	1E	View
Residential Soft Floor Layers	Journey Level	$49.91	15J	4C	View
Residential Sprinkler Fitters (Fire Protection)	Journey Level	$61.85		1	View
Residential Stone Masons	Journey Level	$39.71		1	View
Residential Terrazzo Workers	Journey Level	$17.13		1	View
Residential Terrazzo/Tile Finishers	Journey Level	$27.90		1	View
Residential Tile Setters	Journey Level	$21.38		1	View
Roofers	Journey Level	$70.70	5A	3H	View
Roofers	Using Irritable Bituminous Materials	$74.15	5A	3H	View
Sheet Metal Workers	Journey Level (Field or Shop)	$107.92	7F	1E	View
Shipbuilding & Ship Repair	New Construction Boilermaker	$61.07	7X	4J	View

Shipbuilding & Ship Repair	New Construction Carpenter	$51.85	**7X**	**4J**	**View**
Shipbuilding & Ship Repair	New Construction Crane Operator	$44.29	**7V**	**1**	**View**
Shipbuilding & Ship Repair	New Construction Electrician	$61.12	**7X**	**4J**	**View**
Shipbuilding & Ship Repair	New Construction Heat & Frost Insulator	$96.42	**15H**	**11C**	**View**
Shipbuilding & Ship Repair	New Construction Laborer	$60.73	**7X**	**4J**	**View**
Shipbuilding & Ship Repair	New Construction Machinist	$60.93	**7X**	**4J**	**View**
Shipbuilding & Ship Repair	New Construction Operating Engineer	$44.29	**7V**	**1**	**View**
Shipbuilding & Ship Repair	New Construction Painter	$60.93	**7X**	**4J**	**View**
Shipbuilding & Ship Repair	New Construction Pipefitter	$61.21	**7X**	**4J**	**View**
Shipbuilding & Ship Repair	New Construction Rigger	$61.07	**7X**	**4J**	**View**
Shipbuilding & Ship Repair	New Construction Sheet Metal	$60.94	**7X**	**4J**	**View**
Shipbuilding & Ship	New Construction	$51.85	**7X**	**4J**	**View**

Repair	Shipwright				
Shipbuilding & Ship Repair	New Construction Warehouse/ Teamster	$44.29	**7V**	**1**	**View**
Shipbuilding & Ship Repair	New Construction Welder / Burner	$61.07	**7X**	**4J**	**View**
Shipbuilding & Ship Repair	Ship Repair Boilermaker	$61.07	**7X**	**4J**	**View**
Shipbuilding & Ship Repair	Ship Repair Carpenter	$51.85	**7X**	**4J**	**View**
Shipbuilding & Ship Repair	Ship Repair Crane Operator	$45.06	**7Y**	**4K**	**View**
Shipbuilding & Ship Repair	Ship Repair Electrician	$61.12	**7X**	**4J**	**View**
Shipbuilding & Ship Repair	Ship Repair Heat & Frost Insulator	$96.42	**15H**	**11C**	**View**
Shipbuilding & Ship Repair	Ship Repair Laborer	$60.73	**7X**	**4J**	**View**
Shipbuilding & Ship Repair	Ship Repair Machinist	$60.93	**7X**	**4J**	**View**
Shipbuilding & Ship Repair	Ship Repair Operating Engineer	$45.06	**7Y**	**4K**	**View**
Shipbuilding & Ship Repair	Ship Repair Painter	$60.93	**7X**	**4J**	**View**

Shipbuilding & Ship Repair	Ship Repair Pipefitter	$61.21	**7X**	**4J**	**View**
Shipbuilding & Ship Repair	Ship Repair Rigger	$61.07	**7X**	**4J**	**View**
Shipbuilding & Ship Repair	Ship Repair Sheet Metal	$60.94	**7X**	**4J**	**View**
Shipbuilding & Ship Repair	Ship Repair Shipwright	$51.85	**7X**	**4J**	**View**
Shipbuilding & Ship Repair	Ship Repair Warehouse / Teamster	$45.06	**7Y**	**4K**	**View**
Sign Makers & Installers (Electrical)	Sign Installer	$26.56		**1**	**View**
Sign Makers & Installers (Electrical)	Sign Maker	$20.50		**1**	**View**
Sign Makers & Installers (Non-Electrical)	Sign Installer	$22.56		**1**	**View**
Sign Makers & Installers (Non-Electrical)	Sign Maker	$20.50		**1**	**View**
Soft Floor Layers	Journey Level	$63.29	**15J**	**4C**	**View**
Solar Controls For Windows	Journey Level	$17.13		**1**	**View**

Sprinkler Fitters (Fire Protection)	Journey Level	$104.44	**5C**	**1X**		**View**
Stage Rigging Mechanics (Non Structural)	Journey Level	$17.13		**1**		**View**
Stone Masons	Journey Level	$76.07	**7E**	**1N**		**View**
Street And Parking Lot Sweeper Workers	Journey Level	$17.13		**1**		**View**
Surveyors	Assistant Construction Site Surveyor	$90.55	**7A**	**11H**	**8X**	**View**
Surveyors	Chainman	$86.60	**7A**	**11H**	**8X**	**View**
Surveyors	Construction Site Surveyor	$92.08	**7A**	**11H**	**8X**	**View**
Surveyors	Drone Operator (when used in conjunction with survey work only)	$86.60	**7A**	**11H**	**8X**	**View**
Surveyors	Ground Penetrating Radar Operator	$86.60	**7A**	**11H**	**8X**	**View**
Telecommunication Technicians	Telecom Technician Journey Level	$62.05	**5B**	**1B**		**View**

Telephone Line Construction - Outside	Cable Splicer	$42.62	**5A**	**2B**	**View**
Telephone Line Construction - Outside	Hole Digger/ Ground Person	$27.97	**5A**	**2B**	**View**
Telephone Line Construction - Outside	Telephone Equipment Operator (Light)	$35.60	**5A**	**2B**	**View**
Telephone Line Construction - Outside	Telephone Lineperson	$40.28	**5A**	**2B**	**View**
Terrazzo Workers	Journey Level	$70.61	**7E**	**1N**	**View**
Tile Setters	Journey Level	$68.61	**7E**	**1N**	**View**
Tile, Marble & Terrazzo Finishers	Finisher	$59.44	**7E**	**1N**	**View**
Traffic Control Stripers	All cleanup required in connection with traffic control stripers work (Group 1)	$95.41	**15L**	**1K**	**View**
Traffic Control Stripers	Handling, painting and installing of all car stops, stop signs and any	$62.69	**15L**	**1K**	**View**

	other type sign (Group 2)				
Traffic Control Stripers	Installation of guard rail and posts and similar protective devices (Group 2)	$62.69	**15L**	**1K**	**View**
Traffic Control Stripers	Installation of parking gates, ticket spitters and other mechanical and automatic control devices (Group 2)	$62.69	**15L**	**1K**	**View**
Traffic Control Stripers	Installation of plastic metal or composition button, or lines used instead of paint (Group 1)	$95.41	**15L**	**1K**	**View**
Traffic Control Stripers	Line removal; chemical sand and hydro-blast, paint and button (Group 1)	$95.41	**15L**	**1K**	**View**
Traffic Control Stripers	Manufacturing and installation of all car stops and control devices	$62.69	**15L**	**1K**	**View**

	and similar traffic regulators (Group 2)				
Traffic Control Stripers	Manufacturing, painting, stenciling, servicing, repairing, placing and removal of traffic safety and control devices/ barricades (Group 2)	$62.69	**15L**	**1K**	**View**
Traffic Control Stripers	Painting and installing lines, arrows, bumpers, curbs, etc., on parking lots, air fields, highways, game courts (Group 1)	$95.41	**15L**	**1K**	**View**
Traffic Control Stripers	Preparation and maintenance of all surfaces (Group 1)	$95.41	**15L**	**1K**	**View**
Traffic Control Stripers	Seal coating, slurry coating and other surface protection (Group	$62.69	**15L**	**1K**	**View**

	2)					
Truck Drivers	Asphalt Mix Over 16 Yards	$82.95	**15J**	**11M**	**8L**	**View**
Truck Drivers	Asphalt Mix To 16 Yards	$82.11	**15J**	**11M**	**8L**	**View**
Truck Drivers	Dump Truck	$82.11	**15J**	**11M**	**8L**	**View**
Truck Drivers	Dump Truck & Trailer	$82.95	**15J**	**11M**	**8L**	**View**
Truck Drivers	Other Trucks	$82.95	**15J**	**11M**	**8L**	**View**
Truck Drivers - Ready Mix	Transit Mix	$82.95	**15J**	**11M**	**8L**	**View**
Well Drillers & Irrigation Pump Installers	Irrigation Pump Installer	$17.13		**1**		**View**
Well Drillers & Irrigation Pump Installers	Oiler	$17.13		**1**		**View**
Well Drillers & Irrigation Pump Installers	Well Driller	$19.01		**1**		**View**

APPENDIX F

Pedestrian Detour and Temporary Ramp Details

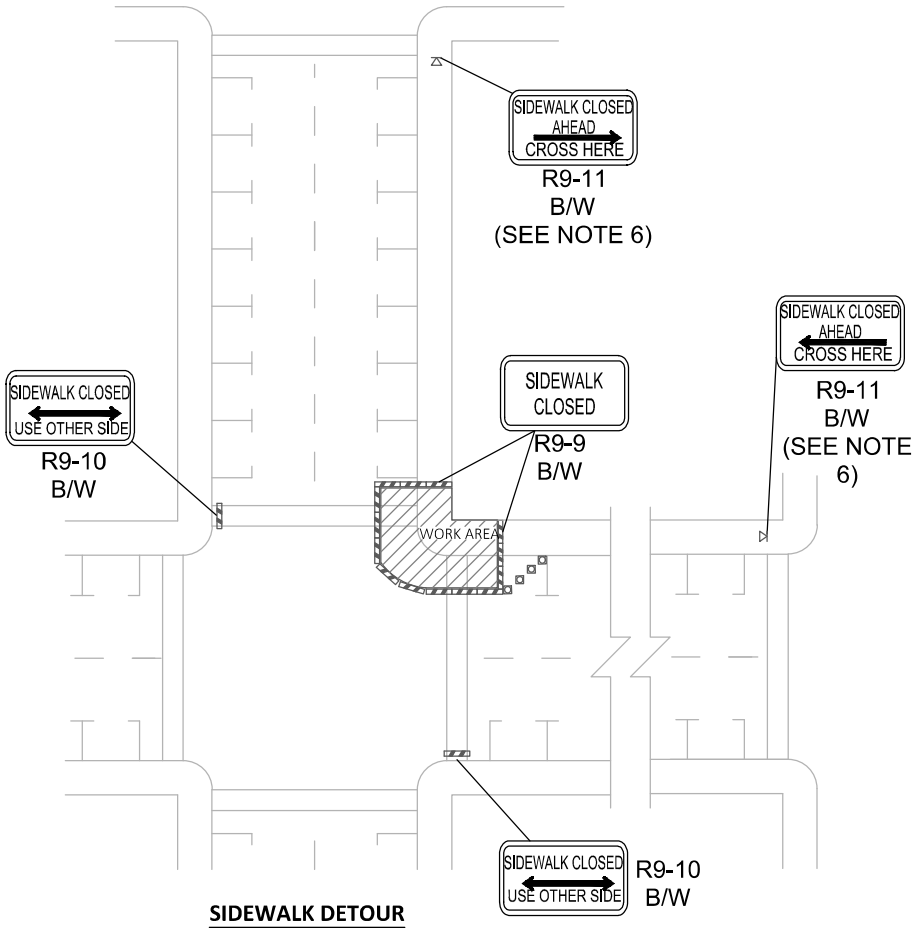

SIDEWALK DETOUR

LEGEND

- TEMPORARY SIGN LOCATION
- CHANNELIZING DEVICES
- PEDESTRIAN CHANNELIZING DEVICES
- TEMPORARY ADA COMPLIANT PEDESTRIAN RAMP FOR SIDEWALKS

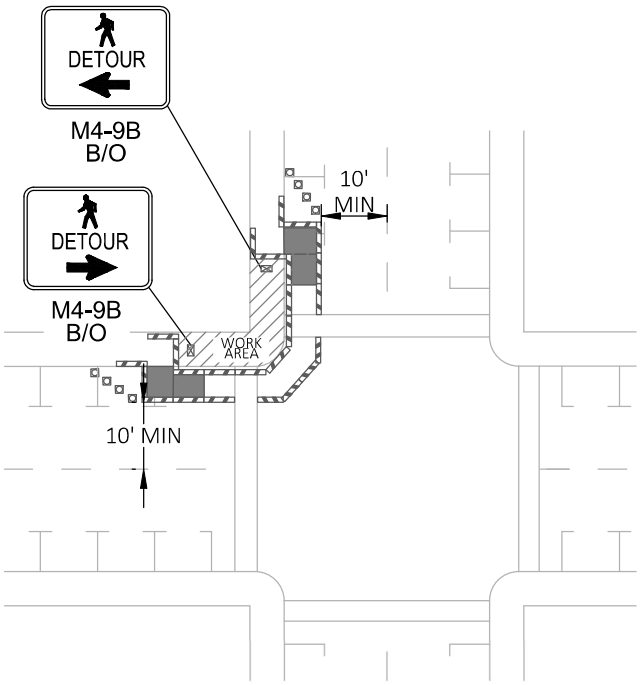

SIDEWALK DIVERSION

NOTES:

1. SIDEWALK DIVERSION IS THE PREFERRED PEDESTRIAN TRAFFIC CONTROL METHOD.
2. CONTROLS SHOWN ARE FOR PEDESTRIAN TRAFFIC ONLY.
3. A 60" PEDESTRIAN PATH WIDTH SHOULD BE MAINTAINED (48" IS THE MINIMUM).
4. SEE STANDARD DETAILS 918 AND 919 FOR TEMPORARY PEDESTRIAN RAMP AND PLATFORM DETAILS.
5. PEDESTRIAN FACILITIES THAT MEET OR EXCEED EXISTING ACCESSIBILITY PROVISIONS MUST BE MAINTAINED, SEE WSDOT STANDARD SPECIFICATION 1-10.2(1)B.
6. INSTALL "NO PARKING" A-BOARD SIGNS ON BARRICADES THROUGHOUT THE WORK AREA 72 HOURS PRIOR TO IMPLEMENTING TRAFFIC CONTROL. PRIOR NOTIFICATION OF LOCAL LAW ENFORCEMENT REQUIRED.

CITY OF MOUNTLAKE TERRACE ENGINEERING SERVICES DEPARTMENT	D&S DRAWING TITLE: INTERSECTION PEDESTRIAN TRAFFIC CONTROL SCALE: N.T.S.	D&S Drawing No. EFFECTIVE DATE:

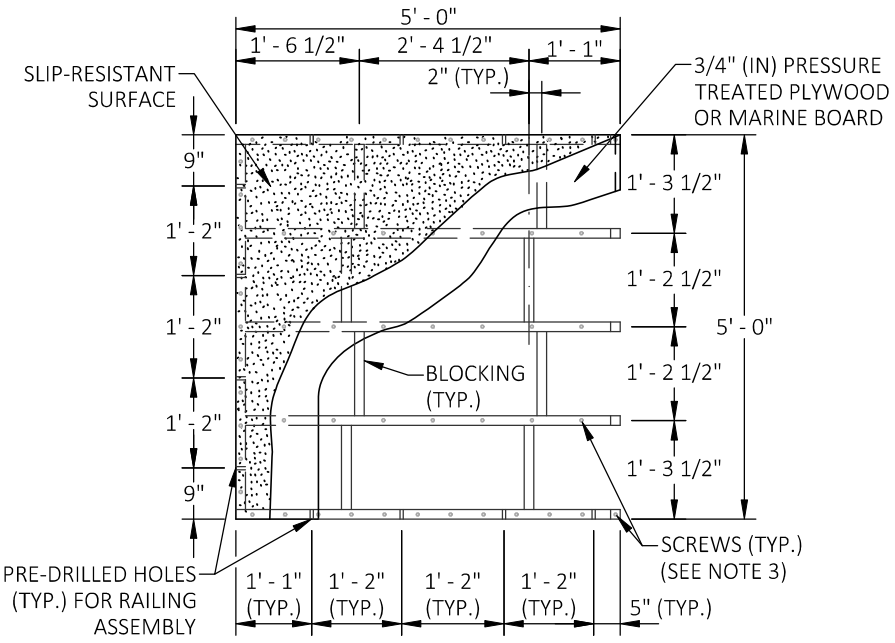

TOP VIEW

PLATFORM DETAIL

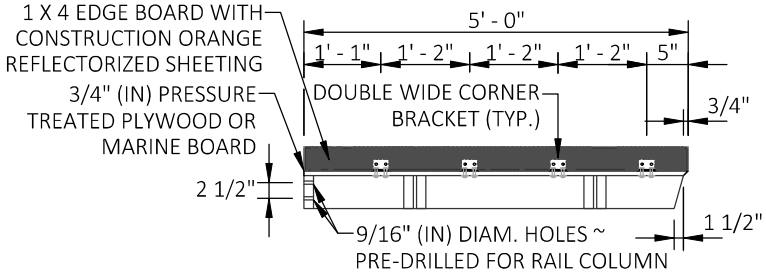

ELEVATION

NOTES:

1. ALL HOLES SHOWN SHALL BE DRILLED TO FACILITATE RE-USE AND FLEXIBLE EXPANSION.

2. THIS DESIGN ASSUMES OPTIMAL CONDITIONS AND A STANDARD CURB HEIGHT OF 6" (IN). INSTALLED RAMPS SHALL BE NO STEEPER THEN 12H : 1V, AND SHALL HAVE A CROSS-SLOPE OF 2% OR LESS. USE SHIMS OR GROUT AS REQUIRED TO ADJUST FOR EXISTING CONDITIONS AND TO PREVENT ROCKING. SHIMS SHALL BE NO HIGHER THAN 1" (IN), AND SHALL BE SECURED TO THE RAMP AND/OR PLATFORM. FOR CURBS SHORTER THAN 6" (IN), INSTALL A RAMP ON THE SIDEWALK, NO STEEPER THAN 12H : 1V, MADE OF GROUT OR AS APPROVED BY THE ENGINEER. ADJUSTMENTS TO THE PLATFORM DIMENSIONS SHOWN MAY BE REQUIRED TO MATCH EXISTING CONDITIONS.

3. SCREWS SHALL BE USED TO SECURE THE RAMP SURFACE, SPACING SHALL BE IN ACCORDANCE WITH THE CURRENT BUILDING CODE.

4. USE A SLIP-RESISTANT TREATMENT FOR SURFACE OF RAMP.

5. ALL FASTENERS SHALL BE GALVANIZED.

CITY OF MOUNTLAKE TERRACE ENGINEERING SERVICES DEPARTMENT	D&S DRAWING TITLE: TEMPORARY PEDESTRIAN RAMP 1 0F 2 SCALE: N.T.S.	D&S Drawing No. EFFECTIVE DATE:

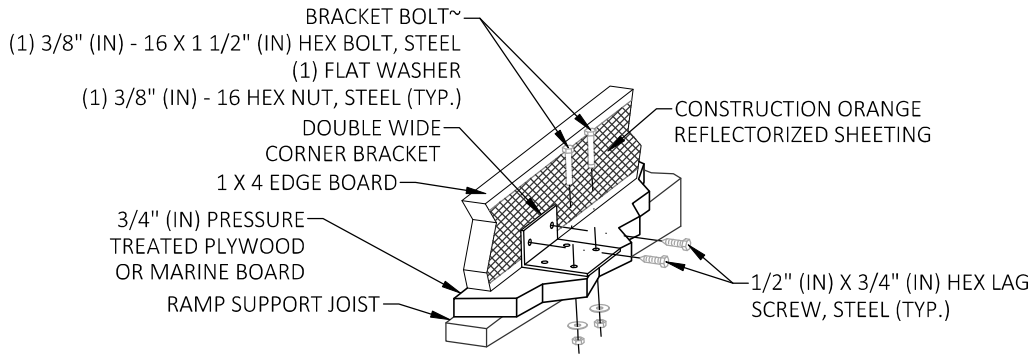

PERSPECTIVE VIEW
DETAIL (A)

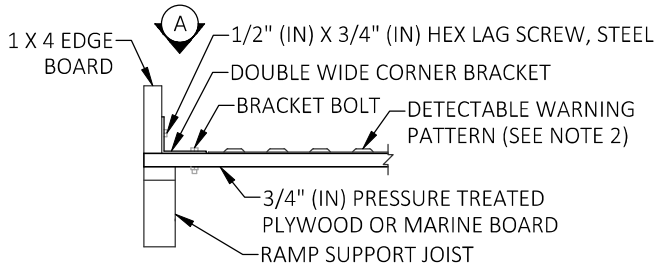

END VIEW
EDGE BOARD ATTACHMENT
DETAIL

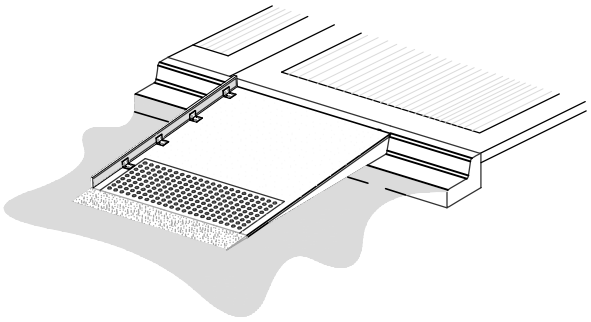

ISOMETRIC VIEW

NOTES:

1. THIS DESIGN ASSUMES OPTIMAL CONDITIONS AND A STANDARD CURB HEIGHT OF 6" (IN). INSTALLED RAMPS SHALL BE NO STEEPER THEN 12H : 1V, AND SHALL HAVE A CROSS-SLOPE OF 2% OR LESS. USE SHIMS OR GROUT AS REQUIRED TO ADJUST FOR EXISTING CONDITIONS AND TO PREVENT ROCKING. SHIMS SHALL BE NO HIGHER THAN 1" (IN), AND SHALL BE SECURED TO THE RAMP. FOR CURBS SHORTER THAN 6" (IN), INSTALL A RAMP ON THE SIDEWALK, NO STEEPER THAN 12H : 1V, MADE OF GROUT OR AS APPROVED BY THE ENGINEER. ADJUSTMENTS TO THE RAMP DIMENSIONS SHOWN MAY BE REQUIRED TO MATCH EXISTING CONDITIONS.

2. THE DETECTABLE WARNING PATTERN SHALL BE INSTALLED ONLY WHEN THE INTENT IS TO GUIDE PEDESTRIANS DIRECTLY ACROSS THE ROADWAY (CROSSWALK). SEE WSDOT STANDARD PLAN F-45.10 FOR DETAILS.

3. SCREWS SHALL BE USED TO SECURE THE RAMP SURFACE, SPACING SHALL BE IN ACCORDANCE WITH THE CURRENT BUILDING CODE.

4. USE A SLIP-RESISTANT TREATMENT FOR SURFACE OF RAMP.

5. ALL FASTENERS SHALL BE GALVANIZED.

6. DO NOT INSTALL A HAND RAILING IF USING THE EDGE BOARD OPTION.

CITY OF MOUNTLAKE TERRACE ENGINEERING SERVICES DEPARTMENT	D&S DRAWING TITLE: SCALE: N.T.S.	TEMPORARY PEDESTRIAN RAMP 2 0F 2	D&S Drawing No. EFFECTIVE DATE:

SPECIAL PROVISIONS

TABLE OF CONTENTS

City of Mountlake Terrace
Westside Water Main Phase II and Overlay
Project No. C2501

INTRODUCTION TO THE SPECIAL PROVISIONS 1
DIVISION 1 – GENERAL REQUIREMENTS 2
DESCRIPTION OF WORK 2
1-01 DEFINITIONS AND TERMS 2
1-01.3 Definitions 2
1-02 BID PROCEDURES AND CONDITIONS 4
1-02.1 Prequalification of Bidders 4
1-02.1 Qualifications of Bidder 4
1-02.1(1) Supplemental Qualifications Criteria *(New Section)* 4
1-02.2 Plans and Specifications 5
1-02.4 Examination of Plans, Specifications and Site of Work 5
1-02.4(1) General 5
1-02.5 Proposal Forms 5
1-02.6 Preparation of Proposal 6
1-02.6 Preparation of Proposal 6
1-02.7 Bid Deposit 7
1-02.9 Delivery of Proposal 7
1-02.10 Withdrawing, Revising, or Supplementing Proposal 8
1-02.13 Irregular Proposals 8
1-02.14 Disqualification of Bidders 9
1-02.15 Pre Award Information 13
1-03 AWARD AND EXECUTION OF CONTRACT 14
1-03.1 Consideration of Bids 14
1-03.3 Execution of Contract 14
1-03.3 Execution of Contract 15
1-03.4 Contract Bond 15
1-03.7 Judicial Review 16
1-04 SCOPE OF THE WORK 16
1-04.2 Coordination of Contract Documents, Plans, Special Provisions, ... 16
1-04.4 Changes 17
1-04.4(1) Minor Changes 17
1-04.6 Variation in Estimated Quantities 17
1-05 CONTROL OF WORK 18
1-05.4 Conformity With and Deviations from Plans and Stakes 18
1-05.7 Removal of Defective and Unauthorized Work 22
1-05.10 Guarantees 22
1-05.10(1) Final Guarantee *(New Section)* 22
1-05.11 Final Inspection 23
1-05.11 Final Inspections and Operational Testing 23
1-05.11(1) Substantial Completion Date 23
1-05.11(2) Final Inspection and Physical Completion Date 24
1-05.11(3) Operational Testing 24
1-05.13 Superintendents, Labor and Equipment of Contractor 25
1-05.14 Cooperation with Other Contractors 25
1-05.15 Method of Serving Notices 25
1-05.16 Water and Power (New Section) 26
1-05.16 Water and Power 26

1-05.18 *Record Drawings (New Section)* ... *26*
1-05.19 *Notifications Relative to Contractor's Activities (New Section)* ... *28*
1-06 **CONTROL OF MATERIAL** ... **31**
1-06.1 *Approval of Materials Prior to Use* ... *31*
1-06.1(2) Request for Approval of Material (RAM) ... 31
1-06.6 *Recycled Materials* ... *31*
1-07 **LEGAL RELATIONS AND RESPONSIBILITIES TO THE PUBLIC** ... **31**
1-07.1 *Laws to be Observed* ... *31*
1-07.1(2) Confined Space ... 32
1-07.2 *Sales Tax* ... *33*
1-07.2 *Sales Tax* ... *33*
1-07.2(1) State Sales Tax — Rule 171 ... 33
1-07.2(2) State Sales Tax — Rule 170 ... 33
1-07.2(3) Services ... 34
1-07.6 *Permits and Licenses* ... *34*
1-07.7 *Load Limits* ... *35*
1-07.7(1) General ... 35
1-07.9 *Wage* ... *35*
1-07.9(3) Apprentices ... 35
1-07.9(5) Required Documents ... 39
1-07.16 *Protection and Restoration of Property* ... *40*
1-07.16(1) Private/Public Property ... 40
1-07.16(2) Vegetation Protection and Restoration ... 40
1-07.16(4) Archaeological and Historical Objects ... 40
1-07.17 *Utilities and Similar Facilities* ... *40*
1-07.17 *Utilities and Similar Facilities* ... *41*
1-07.17(3) Utility Potholing *(New Section)* ... 42
1-07.18 *Public Liability and Property Damage Insurance* ... *43*
1-07.18 *Insurance* ... *43*
1-07.18(1) General Requirements ... 43
1-07.18(2) Additional Insured ... 44
1-07.18(3) Subcontractors ... 44
1-07.18(4) Verification of Coverage ... 45
1-07.18(5) Coverages and Limit ... 46
1-07.23 *Public Convenience and Safety* ... *47*
1-07.23(1) Construction Under Traffic ... 47
1-07.23(1) Construction Under Traffic ... 47
1-07.23(2) Construction and Maintenance of Detours ... 49
1-07.24 *Rights of Way* ... *49*
1-08 **PROSECUTION AND PROGRESS** ... **50**
1-08.0 *Preliminary Matters (New Section)* ... *50*
1-08.0(1) Preconstruction Conference *(New Section)* ... 50
1-08.0(2) Hours of Work *(New Section)* ... 51
1-08.1 *Subcontracting* ... *52*
1-08.1(1) General ... 52
1-08.1(7) Payments to Subcontractors and Lower-Tier Subcontractors ... 53
1-08.3 *Progress Schedule* ... *53*
1-08.3(2) Progress Schedule Types ... 53
1-08.4 *Prosecution of Work* ... *53*
1-08.4 *Notice to Proceed and Prosecution of Work* ... *53*
1-08.4(1) Suggested Construction Sequence *(New Section)* ... 54
1-08.5 *Time for Completion* ... *56*
1-08.6 *Suspension of Work* ... *57*
1-08.9 *Liquidated Damages* ... *57*
1-08.10 *Termination of Contract* ... *58*
1-08.10(6) Removal of Equipment *(New Section)* ... 58

1-09 MEASUREMENT AND PAYMENT 58
1-09.2 Weighing Equipment 58
1-09.2(1) General Requirements for Weighing Equipment 58
1-09.2(1) General Requirements for Weighing Equipment 59
1-09.2(5) Measurement 59
1-09.6 Force Account 59
1-09.7 Mobilization 60
1-09.9 Payments 60
1-09.9 Payments 61
1-09.11 Disputes and Claims 61
1-09.11(3) Time Limitation and Jurisdiction 61
1-09.13 Claims Resolution 62
1-09.13(3) Arbitration 62
1-09.13(4) Venue for Litigation 62
1-10 TEMPORARY TRAFFIC CONTROL 62
1-10.2 Traffic Control Management 63
1-10.2(1) General 63
1-10.3(1) Traffic Control Labor 64
DIVISION 2 – EARTHWORK 65
2-01 CLEARING, GRUBBING, AND ROADSIDE CLEANUP 65
2-01.2 Disposal of Usable Material and Debris 65
2-01.3 Construction Requirements 65
2-01.3(1) Clearing 65
2-01.5 Payment 65
2-02 REMOVAL OF STRUCTURES AND OBSTRUCTIONS 65
2-02.1 Description 65
2-02.3 Construction Requirements 66
2-02.3(3) Removal of Pavement, Sidewalks and Curbs 66
2-02.3(5) Remove / Abandon Existing Utility Pipe *(New Section)* 67
2-02.4 Measurement 67
2-02.5 Payment 67
2-03 ROADWAY EXCAVATION AND EMBANKMENT 68
2-03.5 Payment 68
DIVISION 4 – BASES 69
4-04 BALLAST AND CRUSHED SURFACING 69
4-04.4 Measurement 69
4-04.5 Payment 69
4-06ASPHALT TREATED BASE (ATB) 69
4-06.1 Description 69
4-06.2 Materials 70
4-06.3 Construction Requirements 70
4-06.3(1) Asphalt Mixing Plant 70
4-06.3(2) Preparation of Aggregates 70
4-06.3(3) Vacant 71
4-06.3(4) Mixing 71
4-06.3(5) Hauling Equipment 71
4-06.3(6) Spreading and Finishing 71
4-06.3(7) Density 72
4-06.3(8) Anti-Stripping Additive 72
DIVISION 5 – SURFACE TREATMENTS AND PAVEMENTS 73
5-04 HOT MIX ASPHALT 73
5-04.1 Description 73
5-04.2 Materials 73
5-04.2(1) How to Get an HMA Mix Design on the QPL 74
5-04.2(2) Mix Design - Obtaining Project Approval 74
5-04.3 Construction Requirements 76

5-04.3(1) Weather Limitations 76
5-04.3(2) Paving Under Traffic 76
5-04.3(3) Equipment 77
5-04.3(4) Preparation of Existing Paved Surfaces 81
5-04.3(5) Producing/Stockpiling Aggregates and RAP 83
5-04.3(6) Mixing 83
5-04.3(7) Spreading and Finishing 84
5-04.3(8) Aggregate Acceptance Prior to Incorporation in HMA 84
5-04.3(9) HMA Mixture Acceptance 84
5-04.3(10) HMA Compaction Acceptance 89
5-04.3(11) Reject Work 92
5-04.3(12) Joints 94
5-04.3(13) Surface Smoothness 95
5-04.3(14) Planing (Milling) Bituminous Pavement 96
5-04.3(15) Sealing Pavement Surfaces 101
5-04.3(16) HMA Road Approaches 101
5-04.4 Measurement 101
5-04.4 Measurement 102
5-04.5 Payment 102
5-04.5 Payment 103
5-04.5 Payment 104
5-06 PAVEMENT REPAIR MEMBRANE (NEW SECTION) 106
5-06.1 Description 106
5-06.2 Materials 106
5-06.3 Construction Requirements 106
5-06.4 Measurement 107
5-06.5 Payment 107
5-07 TEMPORARY PAVEMENT PATCHING *(NEW SECTION)* 107
5-07.1 Description 107
5-07.2 Materials 107
5-07.3 Construction Requirements 107
5-07.4 Measurement 108
5-07.5 Payment 108
DIVISION 7 – DRAINAGE STRUCTURES, STORM SEWERS, SANITARY SEWERS, WATER MAINS AND CONDUITS 109
7-05 MANHOLES, INLETS, CATCH BASINS, AND DRYWELLS 109
7-05.1 Description 109
7-05.2 Materials 109
7-05.3 Construction Requirements 109
7-05.3(1) Adjusting Manholes and Catch Basins to Grade 110
7-05.3(5) Connection to Drainage Structure *(New Section)* 110
7-05.3(6) Connection to Existing Pipe *(New Section)* 111
7-05.4 Measurement 111
7-05.5 Payment 111
7-08 GENERAL PIPE INSTALLATION REQUIREMENTS 112
7-08.2 Materials 112
7-08.3 Construction Requirements 113
7-08.3(1) Excavation and Preparation of Trench 113
7-08.3(2) Laying Pipe 113
7-08.3(3) Backfilling 113
7-08.3(5) Pipe Crossing Existing Utilities *(New Section)* 113
7-08.3(6) Existing Side Sewers *(New Section)* 114
7-08.4 Measurement 114
7-08.5 Payment 114
7-09 WATER MAINS 115
7-09.1 Description 115

7-09.2 *Materials* *115*
7-09.3 *Construction Requirements* *115*
7-09.3(13) Handling of Pipe 115
7-09.3(19) Connections 116
7-09.3(21) Concrete Thrust Blocking 117
7-09.3(25) Abandon Existing Water Main *(New Section)* 117
7-09.3(26) Temporary Water System Configuration *(New Section)* 117
7-09.4 *Measurement* *118*
7-09.5 *Payment* *118*
7-12 VALVES FOR WATER MAINS 119
7-12.1 *Description* *119*
7-12.2 *Materials* *119*
7-12.3 *Construction Requirements* *119*
7-12.4 *Measurement* *120*
7-12.5 *Payment* *120*
7-14 HYDRANTS 122
7-14.1 *Description* *122*
7-14.2 *Materials* *122*
7-14.3 *Construction Requirements* *122*
7-14.3(7) Salvage of Removed Hydrants (New Section) 122
7-14.4 *Measurement* *122*
7-14.5 *Payment* *123*
7-15 SERVICE CONNECTIONS 123
7-15.1 *Description* *123*
7-15.2 *Materials* *124*
7-15.3 *Construction Requirements* *124*
7-15.4 *Measurement* *124*
7-15.5 *Payment* *125*
7-18 SIDE SEWERS 125
7-18.1 *Description* *125*
7-18.4 *Measurement* *125*
7-18.5 *Payment* *125*
7-19 SEWER CLEANOUTS 126
7-19.1 *Description* *126*
7-19.4 *Measurement* *126*
7-19.5 *Payment* *126*
DIVISION 8 – MISCELLANEOUS CONSTRUCTION 127
8-01 EROSION CONTROL AND WATER POLLUTION CONTROL 127
8-01.3 *Construction Requirements* *127*
8-01.3(1) General 127
8-02 ROADSIDE RESTORATION 127
8-02.3 *Construction Requirements* *127*
8-02.3(1) Responsibility During Construction 127
8-02.3(6) Mulch and Amendments 127
8-02.3(9) Seeding, Fertilizing, and Mulching 127
8-02.3(10) Lawn Installation 128
8-02.4 *Measurement* *128*
8-02.5 *Payment* *129*
8-04 CURBS, GUTTERS, AND SPILLWAYS 129
8-04.3 *Construction Requirements* *129*
8-04.3(1) Cement Concrete Curbs, Gutters, and Spillways 129
8-04.3(3) Pedestrian Curb (New Section) 129
8-13 MONUMENT CASES 129
8-13.3 *Construction Requirements* *129*
8-13.3(1) Adjust Monument Case and Cover (New Section) 130
8-14 CEMENT CONCRETE SIDEWALKS 130

8-14.1 *Description* *130*
8-14.3 *Construction Requirements* *130*
8-14.3(3) Placing and Finishing Concrete 130
8-14.3(6) Curb Ramp Layouts (New Section) 131
8-14.4 *Measurement* *131*
8-14.5 *Payment* *131*
8-21 PERMANENT SIGNING 131
8-21.1 *Description* *132*
8-21.2 *Materials* *132*
8-21.3 *Construction Requirements* *132*
8-21.3(5) Sign Relocation 132
8-21.3(13) Project Sign *(New Section)* 133
8-21.4 *Measurement* *133*
8-21.5 *Payment* *133*
8-33 LIGHTWEIGHT FILL (NEW SECTION) 133
8-33.1 *Description* *133*
8-33.2 *Materials* *133*
8-33.3 *Construction Requirements* *134*
DIVISION 9 – MATERIALS 135
9-03 AGGREGATES 135
9-03.6 *Vacant* *135*
9-03.6 *Aggregates for Asphalt Treated Base (ATB)* *135*
9-03.6(1) General Requirements 135
9-03.6(2) Grading 135
9-03.6(3) Test Requirements 135
9-03.8 *Aggregates for Hot Mix Asphalt* *136*
9-03.8(7) HMA Tolerances, Specification Limits and Adjustments 136
9-05 DRAINAGE STRUCTURES AND CULVERTS 137
9-05.12 *Polyvinyl Chloride (PVC) Pipe* *137*
9-14 EROSION CONTROL AND ROADSIDE PLANTING 137
9-14.2 *Topsoil* *137*
9-14.2(1) Topsoil Type A 137
9-14.3 *Seed* *138*

SPECIAL PROVISIONS

INTRODUCTION TO THE SPECIAL PROVISIONS

(January 4, 2024 APWA GSP, Option A)

The work on this project shall be accomplished in accordance with the *Standard Specifications for Road, Bridge and Municipal Construction*, 2025 edition, as issued by the Washington State Department of Transportation (WSDOT) and the American Public Works Association (APWA), Washington State Chapter (hereafter "Standard Specifications"). The Standard Specifications, as modified or supplemented by these Special Provisions, all of which are made a part of the Contract Documents, shall govern all of the Work.

These Special Provisions are made up of both General Special Provisions (GSPs) from various sources, which may have project-specific fill-ins; and project-specific Special Provisions. Each Provision either supplements, modifies, or replaces the comparable Standard Specification, or is a new Provision. The deletion, amendment, alteration, or addition to any subsection or portion of the Standard Specifications is meant to pertain only to that particular portion of the section, and in no way should it be interpreted that the balance of the section does not apply.

The GSPs are labeled under the headers of each GSP, with the effective date of the GSP and its source. For example:

(March 8, 2013 APWA GSP)
(April 1, 2013 WSDOT GSP)
(May 1, 2013 MLT GSP)

Project specific special provisions are labeled without a date as such:
(*****)

Also incorporated into the Contract Documents by reference are:

- *Manual on Uniform Traffic Control Devices for Streets and Highways*, currently adopted edition, with Washington State modifications, if any
- *Standard Plans for Road, Bridge and Municipal Construction*, WSDOT Manual M21-01, current edition
- City of Mountlake Terrace Engineering Details & Specifications, 2024 Version

Contractor shall obtain copies of these publications, at Contractor's own expense.

DIVISION 1 – GENERAL REQUIREMENTS

DESCRIPTION OF WORK
(March 13, 1995 WSDOT GSP)

This Contract provides for the improvement of the City's water facilities, including approximately 1,700 linear feet of 8 inch and 12 inch diameter Class 52 ductile iron water main, 7 gate valves, 4 fire hydrants, 1 combination air release/air vacuum valve, 27 water connection services, pressure reducing valve (PRV) assembly, approximately 6,900 square yards of pavement planing, 1,000 tons of HMA for pavement repair, 1,200 tons of HMA for prelevel and overlay paving, 6 curb ramp replacements, 20 linear feet of sewer lateral pipe replacement. The work includes minor restoration of concrete traffic curb and gutter, concrete sidewalk and landscaping, traffic, striping and erosion control, and other work, all in accordance with the attached Contract Plans, these Contract Provisions, and the Standard Specifications.

1-01 DEFINITIONS AND TERMS

1-01.3 Definitions
(January 19, 2022 APWA GSP)
Delete the heading Completion Dates and the three paragraphs that follow it, and replace them with the following:

Dates

Bid Opening Date
The date on which the Contracting Agency publicly opens and reads the Bids.

Award Date
The date of the formal decision of the Contracting Agency to accept the lowest responsible and responsive Bidder for the Work.

Contract Execution Date
The date the Contracting Agency officially binds the Agency to the Contract.

Notice to Proceed Date
The date stated in the Notice to Proceed on which the Contract time begins.

Substantial Completion Date
The day the Engineer determines the Contracting Agency has full and unrestricted use and benefit of the facilities, both from the operational and safety standpoint, any remaining traffic disruptions will be rare and brief, and only minor incidental work, replacement of temporary substitute facilities, plant establishment periods, or correction or repair remains for the Physical Completion of the total Contract.

Physical Completion Date
The day all of the Work is physically completed on the project. All documentation required

by the Contract and required by law does not necessarily need to be furnished by the Contractor by this date.

Completion Date
The day all the Work specified in the Contract is completed and all the obligations of the Contractor under the contract are fulfilled by the Contractor. All documentation required by the Contract and required by law must be furnished by the Contractor before establishment of this date.

Final Acceptance Date
The date on which the Contracting Agency accepts the Work as complete.

Supplement this Section with the following:

All references in the Standard Specifications or WSDOT General Special Provisions, to the terms "Department of Transportation", "Washington State Transportation Commission", "Commission", "Secretary of Transportation", "Secretary", "Headquarters", and "State Treasurer" shall be revised to read "Contracting Agency".

All references to the terms "State" or "state" shall be revised to read "Contracting Agency" unless the reference is to an administrative agency of the State of Washington, a State statute or regulation, or the context reasonably indicates otherwise.

All references to "State Materials Laboratory" shall be revised to read "Contracting Agency designated location".

All references to "final contract voucher certification" shall be interpreted to mean the Contracting Agency form(s) by which final payment is authorized, and final completion and acceptance granted.

Additive
A supplemental unit of work or group of bid items, identified separately in the Bid Proposal, which may, at the discretion of the Contracting Agency, be awarded in addition to the base bid.

Alternate
One of two or more units of work or groups of bid items, identified separately in the Bid Proposal, from which the Contracting Agency may make a choice between different methods or material of construction for performing the same work.

Business Day
A business day is any day from Monday through Friday except holidays as listed in Section 1-08.5.

Contract Bond
The definition in the Standard Specifications for "Contract Bond" applies to whatever bond form(s) are required by the Contract Documents, which may be a combination of a Payment Bond and a Performance Bond.

Contract Documents
See definition for "Contract".

Contract Time
The period of time established by the terms and conditions of the Contract within which the Work must be physically completed.

Notice of Award
The written notice from the Contracting Agency to the successful Bidder signifying the Contracting Agency's acceptance of the Bid Proposal.

Notice to Proceed
The written notice from the Contracting Agency or Engineer to the Contractor authorizing and directing the Contractor to proceed with the Work and establishing the date on which the Contract time begins.

Traffic
Both vehicular and non-vehicular traffic, such as pedestrians, bicyclists, wheelchairs, and equestrian traffic.

1-02 BID PROCEDURES AND CONDITIONS

1-02.1 Prequalification of Bidders
Delete this Section and replace it with the following:

1-02.1 Qualifications of Bidder
(February 17, 2026 APWA GSP, Option A)

Before award of a public works contract, a Bidder must meet at least the minimum qualifications of RCW 39.04.350(1) to be considered a responsible bidder and qualified to be awarded a public works project.

Add the following new section:
1-02.1(1) Supplemental Qualifications Criteria ***(New Section)***
(July 31, 2017 APWA GSP)

In addition, the Contracting Agency has established a Contracting Agency-specific and/or project-specific supplemental criteria, in accordance with RCW 39.04.350(3), for determining Bidder responsibility, including the basis for evaluation and the deadline for appealing a determination that a Bidder is not responsible. These criteria are contained in

Section 1-02.14 Option C of these Special Provisions.

1-02.2 Plans and Specifications

(June 27, 2011 APWA GSP)

Delete this section and replace it with the following:

Information as to where Bid Documents can be obtained or reviewed can be found in the Call for Bids (Advertisement for Bids) for the work.

After award of the contract, plans and specifications will be issued to the Contractor at no cost as detailed below:

To Prime Contractor	No. of Sets	Basis of Distribution
Reduced plans (11" x 17")	2	Furnished automatically upon award.
Contract Provisions	3	Furnished automatically upon award.
Large plans (e.g., 22" x 34")	3	Furnished only upon request.

Additional plans and Contract Provisions may be obtained by the Contractor from the source stated in the Call for Bids, at the Contractor's own expense.

1-02.4 Examination of Plans, Specifications and Site of Work

1-02.4(1) General

(December 30, 2022 APWA GSP, Option B)

The first sentence of the ninth paragraph, beginning with "Prospective Bidder desiring…", is revised to read:

Prospective Bidders desiring an explanation or interpretation of the Bid Documents, shall request the explanation or interpretation in writing by close of business five (5) business days preceding the bid opening to allow a written reply to reach all prospective Bidders before the submission of their Bids.

1-02.5 Proposal Forms

(February 17, 2026 APWA GSP)

Delete this section and replace it with the following:

The Proposal Form will identify the project and its location and describe the work. It will also list estimated quantities, units of measurement, the items of work, and the materials to be furnished at the unit bid prices. The bidder shall complete spaces on the proposal form that call for, but are not limited to, unit prices; extensions; summations; the total bid amount; signatures; date; and, where applicable, retail sales taxes and acknowledgment of

addenda; the bidder's name, address, telephone number, and signature. Bids shall be in legible figures (not words) written in ink or typed and expressed in U.S. dollars. The required certifications are included as part of the Proposal Form.

The Contracting Agency reserves the right to arrange the proposal forms with alternates and additives, if such be to the advantage of the Contracting Agency. The bidder shall bid on all alternates and additives set forth in the Proposal Form unless otherwise specified.

1-02.6 Preparation of Proposal
(February 17, 2026 APWA GSP, Option A)
Revise the fourth paragraph to read:

Subcontractor's List
The Bidder shall submit with the Bid the completed Subcontractor List included in the Contracting Agency Proposal Package. If a Subcontractor List Form is not included in the package, use DOT Form 271-015. The Form shall contain the following:

1. Subcontractors who will perform the Work of structural steel installation, rebar installation, heating, ventilation, air conditioning, and plumbing as described in RCW 18.106 and electrical as described in RCW 19.28,

2. The Work those subcontractors will perform on the Contract and the proof of license when required as described in RCW 39.04.350(1), and

3. No more than one subcontractor for each category of Work identified, except, when subcontractors vary with Bid alternates, in which case the Bidder shall identify which subcontractor will be used for which alternate.

1-02.6 Preparation of Proposal
(February 17, 2026 APWA GSP, Option C)
The first sentence of the second paragraph is revised to read as follows:

All prices shall be in legible figures (not words) written in ink or typed, and expressed in U.S. dollars.

Supplement the second paragraph with the following:

4. If a minimum bid amount has been established for any item, the unit or lump sum price must equal or exceed the minimum amount stated.

Delete the last two paragraphs, and replace them with the following:

The Bidder shall submit with their Bid a completed Contractor Certification Wage Law Compliance form, provided by the Contracting Agency. Failure to return this certification as part of the Bid Proposal package will make this Bid Nonresponsive and ineligible for Award. A Contractor Certification of Wage Law Compliance form is included in the

Proposal Forms.

The Bidder shall make no stipulation on the Bid Form, nor qualify the bid in any manner.

A bid by a corporation shall be executed in the corporate name, by the president or a vice president (or other corporate officer accompanied by evidence of authority to sign).

A bid by a partnership shall be executed in the partnership name and signed by a partner.

A bid by a joint venture shall be executed in the joint venture name and signed by a member of the joint venture.

1-02.7 Bid Deposit

(February 17, 2026 APWA GSP and May 11, 2021 MLT GSP as underlined)

Revise the third sentence of the first paragraph to read:

This deposit may be certified check, postal money order, or a proposal bond (Surety Bond), cash will not be accepted. For projects that are selected by the Contracting Agency to be Bid electronically, the proposal bond may be in either a physical format, or an electronic format via Surety2000.

Supplement this section with the following:

Bid bonds shall contain the following:

1. Contracting Agency-assigned number for the project;
2. Name of the project;
3. The Contracting Agency named as obligee;
4. The amount of the bid bond stated either as a dollar figure or as a percentage which represents five percent of the maximum bid amount that could be awarded;
5. Signature of the bidder's officer empowered to sign official statements. The signature of the person authorized to submit the bid should agree with the signature on the bond, and the title of the person must accompany the said signature;
6. The signature of the surety's officer empowered to sign the bond and the power of attorney.

If so stated in the Contract Provisions, bidder must use the bond form included in the Contract Provisions.

If so stated in the Contract Provisions, cash will not be accepted for a bid deposit.

1-02.9 Delivery of Proposal

(May 11, 2021 MLT GSP)

Delete the first two paragraphs of this section and replace with the following:

Each Proposal shall be submitted electronically using the secure online bid service and project information as stated in the Call for Bids.

1-02.10 Withdrawing, Revising, or Supplementing Proposal

(February 17, 2026 APWA GSP)

Delete this section, and replace it with the following:

After submitting a physical or an electronic bid, if allowed under 1-02.9, Bid Proposal to the Contracting Agency, the Bidder may withdraw, revise, or supplement it if:

1. The Bidder submits a written request signed by an authorized person and physically delivers it to the place designated for receipt of Bid Proposals, if a physical Bid Proposal was submitted, or recalled electronically via electronic method described in 1-02.9 if an electronic Bid Proposal was submitted, and
2. The Contracting Agency receives the request before the time set for receipt of Bid Proposals, and
3. The revised or supplemented Bid Proposal (if any) is received by the Contracting Agency before the time set for receipt of Bid Proposals.

If the Bidder's request to withdraw, revise, or supplement its Bid Proposal is received before the time set for receipt of Bid Proposals, the Contracting Agency will return the unopened Proposal package to the Bidder. The Bidder must then submit the revised or supplemented package in its entirety. If the Bidder does not submit a revised or supplemented package before the time set for receipt of Bid Proposals, then its bid shall be considered withdrawn.

Late revised or supplemented Bid Proposals or late withdrawal requests will be date recorded by the Contracting Agency and returned unopened. Requests to withdraw, revise, or supplement a Bid Proposal may be submitted by the following methods:

1. In person

1-02.13 Irregular Proposals

(November 21, 2025 APWA GSP)

Delete this section and replace it with the following:

1. A Proposal will be considered irregular and will be rejected if:
   a. The Bidder is not prequalified when so required;
   b. The Bidder adds provisions reserving the right to reject or accept the Award, or enter into the Contract;
   c. A price per unit cannot be determined from the Bid Proposal;
   d. The Proposal form is not properly executed;
   e. The Bidder fails to submit or properly complete a subcontractor list as required in Section 1-02.6;
   f. The Bidder fails to submit the Bidder Questionnaire, if applicable, as required by Section 1-02.6, or if the documentation that is submitted fails to meet the

requirements of the Special Provisions; or

g. The Bid Proposal does not constitute a definite and unqualified offer to meet the material terms of the Bid invitation.

2. A Proposal may be considered irregular and may be rejected if:
   a. The Proposal does not include a unit price for every Bid item;
   b. Any of the unit prices are excessively unbalanced (either above or below the amount of a reasonable Bid) to the potential detriment of the Contracting Agency;
   c. The authorized Proposal Form furnished by the Contracting Agency is not used or is altered;
   d. The completed Proposal form contains unauthorized additions, deletions, alternate Bids, or conditions;
   e. Receipt of Addenda is not acknowledged;
   f. A member of a joint venture or partnership and the joint venture or partnership submit Proposals for the same project (in such an instance, both Bids may be rejected); or
   g. If Proposal form entries are not made in ink.

1-02.14 Disqualification of Bidders

(May 17, 2018 APWA GSP, Option C)

Delete this section and replace it with the following:

A Bidder will be deemed not responsible if the Bidder does not meet the mandatory bidder responsibility criteria in RCW 39.04.350(1), as amended; or does not meet Supplemental Criteria 1-8 in this Section:

The Contracting Agency will verify that the Bidder meets the mandatory bidder responsibility criteria in RCW 39.04.350(1), and Supplemental Criteria 1-2. Evidence that the Bidder meets Supplemental Criteria 3-8 shall be provided by the Bidder as stated later in this Section.

1. **Delinquent State Taxes**

   A. Criterion: The Bidder shall not owe delinquent taxes to the Washington State Department of Revenue without a payment plan approved by the Department of Revenue.

   B. Documentation: The Bidder, if and when required as detailed below, shall sign a statement (on a form to be provided by the Contracting Agency) that the Bidder does not owe delinquent taxes to the Washington State Department of Revenue, or if delinquent taxes are owed to the Washington State Department of Revenue, the Bidder must submit a written payment plan approved by the Department of Revenue, to the Contracting Agency by the deadline listed below.

2. **Federal Debarment**

A. Criterion: The Bidder shall not currently be debarred or suspended by the Federal government.

B. Documentation: The Bidder shall not be listed as having an "active exclusion" on the U.S. government's "System for Award Management" database (www.sam.gov).

3. **Subcontractor Responsibility**

A. Criterion: The Bidder's standard subcontract form shall include the subcontractor responsibility language required by RCW 39.06.020, and the Bidder shall have an established procedure which it utilizes to validate the responsibility of each of its subcontractors. The Bidder's subcontract form shall also include a requirement that each of its subcontractors shall have and document a similar procedure to determine whether the sub-tier subcontractors with whom it contracts are also "responsible" subcontractors as defined by RCW 39.06.020.

B. Documentation: The Bidder, if and when required as detailed below, shall submit a copy of its standard subcontract form for review by the Contracting Agency, and a written description of its procedure for validating the responsibility of subcontractors with which it contracts.

4. **Claims Against Retainage and Bonds**

A. Criterion: The Bidder shall not have a record of excessive claims filed against the retainage or payment bonds for public works projects in the three years prior to the bid submittal date, that demonstrate a lack of effective management by the Bidder of making timely and appropriate payments to its subcontractors, suppliers, and workers, unless there are extenuating circumstances and such circumstances are deemed acceptable to the Contracting Agency.

B. Documentation: The Bidder, if and when required as detailed below, shall submit a list of the public works projects completed in the three years prior to the bid submittal date that have had claims against retainage and bonds and include for each project the following information:

- Name of project
- The owner and contact information for the owner;
- A list of claims filed against the retainage and/or payment bond for any of the projects listed;
- A written explanation of the circumstances surrounding each claim and the ultimate resolution of the claim.

5. **Public Bidding Crime**

A. Criterion: The Bidder and/or its owners shall not have been convicted of a crime involving bidding on a public works contract in the five years prior to the bid submittal date.

B. Documentation: The Bidder, if and when required as detailed below, shall sign a statement (on a form to be provided by the Contracting Agency) that the Bidder and/or its owners have not been convicted of a crime involving bidding on a public works contract.

6. **Termination for Cause / Termination for Default**

A. Criterion: The Bidder shall not have had any public works contract terminated for cause or terminated for default by a government agency in the five years prior to the bid submittal date, unless there are extenuating circumstances and such circumstances are deemed acceptable to the Contracting Agency.

B. Documentation: The Bidder, if and when required as detailed below, shall sign a statement (on a form to be provided by the Contracting Agency) that the Bidder has not had any public works contract terminated for cause or terminated for default by a government agency in the five years prior to the bid submittal date; or if Bidder was terminated, describe the circumstances.

7. **Lawsuits**

A. Criterion: The Bidder shall not have lawsuits with judgments entered against the Bidder in the five years prior to the bid submittal date that demonstrate a pattern of failing to meet the terms of contracts, unless there are extenuating circumstances and such circumstances are deemed acceptable to the Contracting Agency.

B. Documentation: The Bidder, if and when required as detailed below, shall sign a statement (on a form to be provided by the Contracting Agency) that the Bidder has not had any lawsuits with judgments entered against the Bidder in the five years prior to the bid submittal date that demonstrate a pattern of failing to meet the terms of contracts, or shall submit a list of all lawsuits with judgments entered against the Bidder in the five years prior to the bid submittal date, along with a written explanation of the circumstances surrounding each such lawsuit. The Contracting Agency shall evaluate these explanations to determine whether the lawsuits demonstrate a pattern of failing to meet of terms of construction related contracts.

8. **Completion of Similar Projects**

A. Criterion: The bidder shall have successfully completed at least three (3) projects of a similar size and scope as required by the Contract Documents for this project within the last five (5) years. The bidder shall identify the total number of successfully completed and not successfully completed projects for public or

private entities, and the total number of these projects involving litigation, mediation, arbitration, or unresolved claims within the last five (5) years.

In evaluating whether the projects were "successfully completed," the Owner may check references for the previous projects and may evaluate the Owner's assessment of the Bidder performance, including but not limited to the following areas:

a. Quality control;
b. Safety record;
c. Timeliness of performance;
d. Use of skilled personnel;
e. Management of subcontractors;
f. Availability of and use of appropriate equipment;
g. Compliance with contract documents;
h. Management of submittals process, change orders, and project close-out.

B. Documentation: The Bidder shall submit a list of projects of similar size and scope to this project, as described in the Invitation for Bid, completed within the last five (5) years. For the purposes of meeting this criterion, the Owner has determined that "similar size and scope to this project" means projects that have the following characteristics:

a. Installation of water main facilities including:
    i. Water Service meters
    ii. Fire Hydrants
    iii. Air release/vacuum valve assemblies
    iv. Pressure reducing assemblies

The information about each project shall include the following:

a. Owner's name and contact information for the owner's representative;
b. Awarded contract amount;
c. Final contract amount;
d. A description of the scope of the project and how the project is similar to this project;
e. The Bidders assessment of its performance of each project, including but not limited to the following:
    1. Quality control;
    2. Safety record;
    3. Timeliness of performance;
    4. Use of skilled personnel;
    5. Management of subcontractors;
    6. Availability of and use of appropriate equipment;
    7. Compliance with contract documents;
    8. Management of submittals process and change orders.

As evidence that the Bidder meets the Supplemental Responsibility Criteria stated above, the apparent low Bidder must submit to the Contracting Agency by 12:00 P.M. (noon) of the

second business day following the bid submittal deadline, a written statement verifying that the Bidder meets the Supplemental Criteria together with supporting documentation (sufficient in the sole judgment of the Contracting Agency) demonstrating compliance with the Supplemental Responsibility Criteria. The Contracting Agency reserves the right to request further documentation as needed from the low bidder and documentation from other Bidders as well to assess Bidder responsibility and compliance with all bidder responsibility criteria. The Contracting Agency also reserves the right to obtain information from third-parties and independent sources of information concerning a Bidder's compliance with the mandatory and supplemental criteria, and to use that information in their evaluation. The Contracting Agency may consider mitigating factors in determining whether the Bidder complies with the requirements of the Supplemental Criteria.

The basis for evaluation of Bidder compliance with these mandatory and Supplemental Criteria shall include any documents or facts obtained by Contracting Agency (whether from the Bidder or third parties) including but not limited to: (i) financial, historical, or operational data from the Bidder; (ii) information obtained directly by the Contracting Agency from others for whom the Bidder has worked, or other public agencies or private enterprises; and (iii) any additional information obtained by the Contracting Agency which is believed to be relevant to the matter.

If the Contracting Agency determines the Bidder does not meet the bidder responsibility criteria above and is therefore not a responsible Bidder, the Contracting Agency shall notify the Bidder in writing, with the reasons for its determination. If the Bidder disagrees with this determination, it may appeal the determination within two (2) business days of the Contracting Agency's determination by presenting its appeal and any additional information to the Contracting Agency. The Contracting Agency will consider the appeal and any additional information before issuing its final determination. If the final determination affirms that the Bidder is not responsible, the Contracting Agency will not execute a contract with any other Bidder until at least two business days after the Bidder determined to be not responsible has received the Contracting Agency's final determination.

Request to Change Supplemental Bidder Responsibility Criteria Prior To Bid: Bidders with concerns about the relevancy or restrictiveness of the Supplemental Bidder Responsibility Criteria may make or submit requests to the Contracting Agency to modify the criteria. Such requests shall be in writing, describe the nature of the concerns, and propose specific modifications to the criteria. Bidders shall submit such requests to the Contracting Agency no later than five (5) business days prior to the bid submittal deadline and address the request to the Project Engineer or such other person designated by the Contracting Agency in the Bid Documents.

1-02.15 Pre Award Information

(December 30, 2022 APWA GSP)

Revise this section to read:

Before awarding any contract, the Contracting Agency may require one or more of these items or actions of the apparent lowest responsible bidder:

1. A complete statement of the origin, composition, and manufacture of any or all materials to be used,
2. Samples of these materials for quality and fitness tests,
3. A progress schedule (in a form the Contracting Agency requires) showing the order of and time required for the various phases of the work,
4. A breakdown of costs assigned to any bid item,
5. Attendance at a conference with the Engineer or representatives of the Engineer,
6. Obtain, and furnish a copy of, a business license to do business in the city or county where the work is located.
7. Any other information or action taken that is deemed necessary to ensure that the bidder is the lowest responsible bidder.

1-03 AWARD AND EXECUTION OF CONTRACT

1-03.1 Consideration of Bids

(December 30, 2022 APWA GSP)

Revise the first paragraph to read:

After opening and reading proposals, the Contracting Agency will check them for correctness of extensions of the prices per unit and the total price. If a discrepancy exists between the price per unit and the extended amount of any bid item, the price per unit will control. If a minimum bid amount has been established for any item and the bidder's unit or lump sum price is less than the minimum specified amount, the Contracting Agency will unilaterally revise the unit or lump sum price, to the minimum specified amount and recalculate the extension. The total of extensions, corrected where necessary, including sales taxes where applicable and such additives and/or alternates as selected by the Contracting Agency, will be used by the Contracting Agency for award purposes and to fix the Awarded Contract Price amount and the amount of the contract bond.

1-03.3 Execution of Contract

(February 17, 2026 APWA GSP, Option A)

Revise this section to read:

Copies of the Contract Provisions, including the unsigned Form of Contract, will be available for signature by the successful bidder on the first business day following award. The number of copies to be executed by the Contractor will be determined by the Contracting Agency.

Within 3 calendar days after the award date, the successful Bidder shall return the signed Contracting Agency-prepared Contract, an insurance certification as required by Section 1-07.18, a satisfactory bond as required by law and Section 1-03.4, the Transfer of Coverage form for the Construction Stormwater General Permit with sections I, III, and

VIII completed when provided. Before execution of the Contract by the Contracting Agency, the successful Bidder shall provide, if required, any of the following: pre-Award information required by the Contracting Agency as listed under Section 1-02.15, proof of licensure for electrical, HVAC, or plumbing subcontractors. If the Prime Contractor lists themselves as performing electrical, HVAC, or plumbing they are required to submit proof of licensure prior to execution.

Until the Contracting Agency executes a Contract, no Proposal shall bind the Contracting Agency nor shall any Work begin within the project limits or within Contracting Agency-furnished sites. The Contractor shall bear all risks for any Work begun outside such areas and for any materials ordered before the Contract is executed by the Contracting Agency.

If the Bidder experiences circumstances beyond their control that prevents return of the Contract documents within the calendar days after the Award date stated above, the Contracting Agency may grant up to a maximum of 10 additional calendar days for return of the documents, provided the Contracting Agency deems the circumstances warrant it.

1-03.3 Execution of Contract

(January 29, 2024 MLT GSP)

Supplement this section with the following:

Within 3 calendar days of award date (not including Saturdays, Sundays and holidays), the successful Bidder shall provide the information necessary to execute the Contract electronically to the Contracting Agency. The bidder shall send the contact information, including the full name, email address, and phone number, for the authorized signer and bonding agent to the contracting agency at jrivers@mltwa.gov.

1-03.4 Contract Bond

(July 23, 2015 APWA GSP)

Delete the first paragraph and replace it with the following:

The successful bidder shall provide executed payment and performance bond(s) for the full contract amount. The bond may be a combined payment and performance bond; or be separate payment and performance bonds. In the case of separate payment and performance bonds, each shall be for the full contract amount. The bond(s) shall:

1. Be on Contracting Agency-furnished form(s);
2. Be signed by an approved surety (or sureties) that:
   a. Is registered with the Washington State Insurance Commissioner, and
   b. Appears on the current Authorized Insurance List in the State of Washington published by the Office of the Insurance Commissioner,
3. Guarantee that the Contractor will perform and comply with all obligations, duties, and conditions under the Contract, including but not limited to the duty and obligation to indemnify, defend, and protect the Contracting Agency and the Public Works Board against all losses and claims related directly or indirectly from any failure:

a. Of the Contractor (or any of the employees, subcontractors, or lower tier subcontractors of the Contractor) to faithfully perform and comply with all contract obligations, conditions, and duties, or
b. Of the Contractor (or the subcontractors or lower tier subcontractors of the Contractor) to pay all laborers, mechanics, subcontractors, lower tier subcontractors, material person, or any other person who provides supplies or provisions for carrying out the work;

4. Be conditioned upon the payment of taxes, increases, and penalties incurred on the project under titles 50, 51, and 82 RCW; and
5. Be accompanied by a power of attorney for the Surety's officer empowered to sign the bond; and
6. Be signed by an officer of the Contractor empowered to sign official statements (sole proprietor or partner). If the Contractor is a corporation, the bond(s) must be signed by the president or vice president, unless accompanied by written proof of the authority of the individual signing the bond(s) to bind the corporation (i.e., corporate resolution, power of attorney, or a letter to such effect signed by the president or vice president).

1-03.7 Judicial Review

(December 30, 2022 APWA GSP)
Revise this section to read:

All decisions made by the Contracting Agency regarding the Award and execution of the Contract or Bid rejection shall be conclusive subject to the scope of judicial review permitted under Washington Law. Such review, if any, shall be timely filed in the Superior Court of the county where the Contracting Agency headquarters is located, provided that where an action is asserted against a county, RCW 36.01.050 shall control venue and jurisdiction.

1-04 SCOPE OF THE WORK

1-04.2 Coordination of Contract Documents, Plans, Special Provisions, Specifications, and Addenda

(December 30, 2022 APWA GSP)
Revise the second paragraph to read:

Any inconsistency in the parts of the contract shall be resolved by following this order of precedence (e.g., 1 presiding over 2, 2 over 3, 3 over 4, and so forth):

1. Addenda,
2. Proposal Form,
3. Special Provisions,
4. Contract Plans,
5. Standard Specifications,
6. Contracting Agency's Standard Plans or Details (if any), and

7. WSDOT Standard Plans for Road, Bridge, and Municipal Construction.

1-04.4 Changes

1-04.4(1) Minor Changes

(May 30, 2019 APWA GSP)

Delete the first paragraph and replace it with the following:

Payments or credits for changes amounting to $25,000 or less may be made under the Bid item "Minor Change". At the discretion of the Contracting Agency, this procedure for Minor Changes may be used in lieu of the more formal procedure as outlined in Section 1-04.4, Changes. All "Minor Change" work will be within the scope of the Contract Work and will not change Contract Time.

1-04.6 Variation in Estimated Quantities

(May 25, 2006 APWA GSP)

Supplement this section with the following:

The quantities for the Bid Items listed below have been entered into the Proposal only to provide a common proposal for bidders. Actual quantities will be determined in the field as the work progresses, and will be paid at the original bid price, regardless of final quantity. These bid items shall not be subject to the provisions of 1-04.6 of the Standard Specifications.

Schedule A

Bid Item No. A-5	Potholing
Bid Item No. A-9	Remove and Dispose of Existing Concrete Traffic Curb and Gutter
Bid Item No. A-10	Remove and Dispose of Existing Concrete Sidewalk
Bid Item No. A-11	Crushed Surfacing Top Course Incl. Haul
Bid Item No. A-12	Commercial HMA for Pavement Repair Class ½" PG 58H-22 Incl. Excavation and Haul
Bid Item No. A-14	Commercial HMA or Asphalt Treated Base for Temporary Patch
Bid Item No. A-15	Gravel Borrow Incl. Haul for Water and Sewer
Bid Item No. A-16	Foundation Materials Class A Incl. Haul for Water and Sewer
Bid Item No. A-32	Topsoil Type A
Bid Item No. A-33	Cement Concrete Curb and Gutter
Bid Item No. A-34	Cement Concrete Sidewalk

Schedule B

Bid Item No. B-7	Remove and Dispose of Existing Concrete Traffic Curb and Gutter
Bid Item No. B-8	Remove and Dispose of Existing Concrete Sidewalk
Bid Item No. B-9	Roadway Excavation Incl. Haul
Bid Item No. B-10	Crushed Surfacing Top Course Incl. Haul
Bid Item No. B-11	Permeable Ballast Incl. Haul for Road
Bid Item No. B-13	HMA Class 1/2" PG 58V-22

Bid Item No. B-14	Commercial HMA for Pavement Repair Class ½" PG 58H-22 Incl. Excavation and Haul
Bid Item No. B-16	Pavement Repair Membrane
Bid Item No. B-17	Commercial HMA or Asphalt Treated Base for Temporary Patch
Bid Item No. B-18	New Rectangular Frame and Locking Vaned Grate, and Adjust to Finished Grade
Bid Item No. B-19	Adjust Catch Basin Type 2 with Circular Frame and Locking Solid Cover with "STORM DRAIN" Lettering to Finished Grade
Bid Item No. B-20	New Circular Frame and Locking Solid Cover with "SEWER" Lettering, and Adjust to Finished Grade
Bid Item No. B-21	Adjust Existing Valve Box Case and Cover to Finished Grade
Bid Item No. B-22	Adjust Sewer Cleanout Box to Finished Grade
Bid Item No. B-24	Cement Concrete Traffic Curb and Gutter
Bid Item No. B-25	Cement Concrete Pedestrian Curb
Bid Item No. B-26	Raised Pavement Marker Type 1
Bid Item No. B-27	Raised Pavement Marker Type 2
Bid Item No. B-28	Adjust Monument Case and Cover
Bid Item No. B-29	Cement Concrete Sidewalk
Bid Item No. B-30	Detectable Warning Surface
Bid Item No. B-32	Plastic Crosswalk Line
Bid Item No. B-33	Paint Line
Bid Item No. B-34	Plastic Stop Line
Bid Item No. B-35	Plastic Line
Bid Item No. B-36	Temporary Pavement Marking

1-05 CONTROL OF WORK

1-05.4 Conformity With and Deviations from Plans and Stakes

(January 27, 2022 MLT GSP)

Supplement this section with the following:

Copies of the Contracting Agency provided primary survey control data are available for the bidder's inspection at the office of the Project Engineer.

The Contractor shall be responsible for setting, maintaining, and resetting all alignment stakes, slope stakes, and grades necessary for the construction of the roadbed, drainage, water, surfacing, paving, channelization and pavement marking, illumination and signals, guardrails and barriers, and signing. Except for the survey control data to be furnished by the Contracting Agency, calculations, surveying, and measuring required for setting and maintaining the necessary lines and grades shall be the Contractor's responsibility.

The Contractor shall inform the Engineer when monuments are discovered that were not identified in the Plans and construction activity may disturb or damage the monuments. All monuments noted on the plans "DO NOT DISTURB" shall be protected throughout the length of the project or be replaced at the Contractors expense.

Detailed survey records shall be maintained, including a description of the work performed on each shift, the methods utilized, and the control points used. The record shall be adequate to allow the survey to be reproduced. A copy of each day's record shall be provided to the Engineer within three working days after the end of the shift.

The meaning of words and terms used in this provision shall be as listed in "Definitions of Surveying and Associated Terms" current edition, published by the American Congress on Surveying and Mapping and the American Society of Civil Engineers.

The survey work shall include but not be limited to the following:

1. Verify the primary horizontal and vertical control furnished by the Contracting Agency, and expand into secondary control by adding stakes and hubs as well as additional survey control needed for the project. Provide descriptions of secondary control to the Contracting Agency. The description shall include coordinates and elevations of all secondary control points.

2. Establish the centerlines of all alignments by placing hubs, stakes, or marks on centerline or on offsets to centerline at all curve points (PCs, PTs, and PIs) and at points on the alignments spaced no further than 50 feet.

3. Establish clearing limits, placing stakes at all angle points and at intermediate points not more than 50 feet apart. The clearing and grubbing limits shall be 5 feet beyond the toe of a fill and 10 feet beyond the top of a cut unless otherwise shown in the Plans.

4. Establish grading limits, placing slope stakes at centerline increments not more than 50 feet apart. Establish offset reference to all slope stakes. If Global Positioning Satellite (GPS) Machine Controls are used to provide grade control, then slope stakes may be omitted at the discretion of the Contractor.

5. Establish the horizontal and vertical location of all drainage features, placing offset stakes to all drainage structures and to pipes at a horizontal interval not greater than 25 feet. Establish the horizontal and vertical location for water mains and appurtenances, placing stakes at horizontal intervals not greater than 50 feet in tangent sections, 25 feet in curve sections with a radius less than 500 feet. Additional stakes shall be set, as necessary to avoid utility conflicts, at locations where the new water improvements cross the alignment of existing underground utilities.

6. Establish roadbed and surfacing elevations by placing stakes at the top of subgrade and at the top of each course of surfacing. Subgrade and surfacing stakes shall be set at horizontal intervals not greater than 50 feet in tangent sections, 25 feet in curve sections with a radius less than 300 feet, and at 10-foot intervals in intersection radii with a radius less than 10 feet. Transversely, stakes shall be placed at all locations where the roadway slope changes and at additional points such that the transverse spacing of stakes is not more than 12 feet. If GPS Machine Controls are used to

provide grade control, then roadbed and surfacing stakes may be omitted at the discretion of the Contractor.

7. Establish intermediate elevation benchmarks as needed to check work throughout the project.

8. Provide references for paving pins at 25-foot intervals or provide simultaneous surveying to establish location and elevation of paving pins as they are being placed.

9. For all other types of construction included in this provision, (including but not limited to channelization and pavement marking, illumination and signals, guardrails and barriers, and signing) provide staking and layout as necessary to adequately locate, construct, and check the specific construction activity.

10. Contractor shall determine if changes are needed to the profiles or roadway sections shown in the Contract Plans in order to achieve proper smoothness and drainage where matching into existing features, such as a smooth transition from new pavement to existing pavement. The Contractor shall submit these changes to the Project Engineer for review and approval 10 days prior to the beginning of work.

The Contractor shall provide the Contracting Agency copies of any calculations and staking data when requested by the Engineer.

To facilitate the establishment of these lines and elevations, the Contracting Agency will provide the Contractor with primary survey control information consisting of descriptions of two primary control points used for the horizontal and vertical control, and descriptions of two additional primary control points for every additional three miles of project length. Primary control points will be described by reference to the project alignment and the coordinate system and elevation datum utilized by the project. In addition, the Contracting Agency will supply horizontal coordinates for the beginning and ending points and for each Point of Intersection (PI) on each alignment included in the project.

The Contractor shall ensure a surveying accuracy within the following tolerances:

	Vertical	Horizontal
Slope stakes	±0.10 feet	±0.10 feet
Subgrade grade stakes set 0.04 feet below grade	±0.01 feet	±0.5 feet (parallel to alignment) ±0.1 feet (normal to alignment)

Stationing on roadway	N/A	±0.1 feet
Alignment on roadway	N/A	±0.04 feet
Surfacing grade stakes	±0.01 feet	±0.5 feet (parallel to alignment) ±0.1 feet (normal to alignment)
Roadway paving pins for surfacing or paving	±0.01 feet	±0.2 feet (parallel to alignment) ±0.1 feet (normal to alignment)

The Contracting Agency may spot-check the Contractor's surveying. These spot-checks will not change the requirements for normal checking by the Contractor.

When staking roadway alignment and stationing, the Contractor shall perform independent checks from different secondary control to ensure that the points staked are within the specified survey accuracy tolerances.

The Contractor shall calculate coordinates for the alignment. The Contracting Agency will verify these coordinates prior to issuing approval to the Contractor for commencing with the work. The Contracting Agency will require up to seven calendar days from the date the data is received.

Contract work to be performed using contractor-provided stakes shall not begin until the stakes are approved by the Contracting Agency. Such approval shall not relieve the Contractor of responsibility for the accuracy of the stakes.

Stakes shall be marked in accordance with Standard Plan A10.10. When stakes are needed that are not described in the Plans, then those stakes shall be marked, at no additional cost to the Contracting Agency as ordered by the Engineer.

Payment

Payment will be made in accordance with Section 1-04.1 for the following bid item when included in the proposal:

"Roadway Surveying", lump sum.

The lump sum contract price for "Roadway Surveying" shall be full pay for all labor, equipment, materials, and supervision utilized to perform the Work specified, including any resurveying, checking, correction of errors, replacement of missing or damaged stakes, and coordination efforts.

1-05.7 Removal of Defective and Unauthorized Work

(October 1, 2005 APWA GSP)

Supplement this section with the following:

If the Contractor fails to remedy defective or unauthorized work within the time specified in a written notice from the Engineer, or fails to perform any part of the work required by the Contract Documents, the Engineer may correct and remedy such work as may be identified in the written notice, with Contracting Agency forces or by such other means as the Contracting Agency may deem necessary.

If the Contractor fails to comply with a written order to remedy what the Engineer determines to be an emergency situation, the Engineer may have the defective and unauthorized work corrected immediately, have the rejected work removed and replaced, or have work the Contractor refuses to perform completed by using Contracting Agency or other forces. An emergency situation is any situation when, in the opinion of the Engineer, a delay in its remedy could be potentially unsafe, or might cause serious risk of loss or damage to the public.

Direct or indirect costs incurred by the Contracting Agency attributable to correcting and remedying defective or unauthorized work, or work the Contractor failed or refused to perform, shall be paid by the Contractor. Payment will be deducted by the Engineer from monies due, or to become due, the Contractor. Such direct and indirect costs shall include in particular, but without limitation, compensation for additional professional services required, and costs for repair and replacement of work of others destroyed or damaged by correction, removal, or replacement of the Contractor's unauthorized work.

No adjustment in contract time or compensation will be allowed because of the delay in the performance of the work attributable to the exercise of the Contracting Agency's rights provided by this Section.

The rights exercised under the provisions of this section shall not diminish the Contracting Agency's right to pursue any other avenue for additional remedy or damages with respect to the Contractor's failure to perform the work as required.

1-05.10 Guarantees

Add the following new section:

1-05.10(1) Final Guarantee *(New Section)*

(January 27, 2022 MLT GSP)

Within the fifteen (15) calendar days following the physical completion dated as established by the Contracting Agency, the Contractor shall file with the City a Construction Maintenance Bond in the amount of **20 percent** of the final construction cost. Said bond will be held by the City for a period of two years from the date of physical completion of construction. Should any failures due to faulty workmanship or materials

occur within the two-year period, the City will require the Contractor, at contractor's expense, to correct them. The bond document shall:

1. Be on Contracting Agency-furnished form(s);
2. Be signed by an approved surety (or sureties) that:
   a. Is registered with the Washington State Insurance Commissioner, and
   b. Appears on the current Authorized Insurance List in the State of Washington published by the Office of the Insurance Commissioner,
3. Guarantee that the Contractor will correct or replace any defective work or materials discovered within a period of two (2) years from the date of physical completion, including but not limited to the duty and obligation to indemnify, defend, and protect the Contracting Agency and the Public Works Board against all losses and claims related directly or indirectly from any failure; and
5. Be accompanied by a power of attorney for the Surety's officer empowered to sign the bond; and
6. Be signed by an officer of the Contractor empowered to sign official statements (sole proprietor or partner). If the Contractor is a corporation, the bond(s) must be signed by the president or vice president, unless accompanied by written proof of the authority of the individual signing the bond(s) to bind the corporation (i.e., corporate resolution, power of attorney, or a letter to such effect signed by the president or vice president).

1-05.11 Final Inspection

Delete this section and replace with the following:

1-05.11 Final Inspections and Operational Testing

(October 1, 2005 APWA GSP)

1-05.11(1) Substantial Completion Date

When the Contractor considers the work to be substantially complete, the Contractor shall so notify the Engineer and request the Engineer establish the Substantial Completion Date. The Contractor's request shall list the specific items of work that remain to be completed in order to reach physical completion. The Engineer will schedule an inspection of the work with the Contractor to determine the status of completion. The Engineer may also establish the Substantial Completion Date unilaterally.

If, after this inspection, the Engineer concurs with the Contractor that the work is substantially complete and ready for its intended use, the Engineer, by written notice to the Contractor, will set the Substantial Completion Date. If, after this inspection the Engineer does not consider the work substantially complete and ready for its intended use, the Engineer will, by written notice, so notify the Contractor giving the reasons therefore.

Upon receipt of written notice concurring in or denying substantial completion, whichever is applicable, the Contractor shall pursue vigorously, diligently and without unauthorized

interruption, the work necessary to reach Substantial and Physical Completion. The Contractor shall provide the Engineer with a revised schedule indicating when the Contractor expects to reach substantial and physical completion of the work.

The above process shall be repeated until the Engineer establishes the Substantial Completion Date and the Contractor considers the work physically complete and ready for final inspection.

1-05.11(2) Final Inspection and Physical Completion Date

When the Contractor considers the work physically complete and ready for final inspection, the Contractor by written notice, shall request the Engineer to schedule a final inspection. The Engineer will set a date for final inspection. The Engineer and the Contractor will then make a final inspection and the Engineer will notify the Contractor in writing of all particulars in which the final inspection reveals the work incomplete or unacceptable. The Contractor shall immediately take such corrective measures as are necessary to remedy the listed deficiencies. Corrective work shall be pursued vigorously, diligently, and without interruption until physical completion of the listed deficiencies. This process will continue until the Engineer is satisfied the listed deficiencies have been corrected.

If action to correct the listed deficiencies is not initiated within 7 days after receipt of the written notice listing the deficiencies, the Engineer may, upon written notice to the Contractor, take whatever steps are necessary to correct those deficiencies pursuant to Section 1-05.7.

The Contractor will not be allowed an extension of contract time because of a delay in the performance of the work attributable to the exercise of the Engineer's right hereunder.

Upon correction of all deficiencies, the Engineer will notify the Contractor and the Contracting Agency, in writing, of the date upon which the work was considered physically complete. That date shall constitute the Physical Completion Date of the contract, but shall not imply acceptance of the work or that all the obligations of the Contractor under the contract have been fulfilled.

1-05.11(3) Operational Testing

It is the intent of the Contracting Agency to have at the Physical Completion Date a complete and operable system. Therefore when the work involves the installation of machinery or other mechanical equipment; street lighting, electrical distribution or signal systems; irrigation systems; buildings; or other similar work it may be desirable for the Engineer to have the Contractor operate and test the work for a period of time after final inspection but prior to the physical completion date. Whenever items of work are listed in the Contract Provisions for operational testing they shall be fully tested under operating conditions for the time period specified to ensure their acceptability prior to the Physical Completion Date. During and following the test period, the Contractor shall correct any items of workmanship, materials, or equipment which prove faulty, or that are not in first

class operating condition. Equipment, electrical controls, meters, or other devices and equipment to be tested during this period shall be tested under the observation of the Engineer, so that the Engineer may determine their suitability for the purpose for which they were installed. The Physical Completion Date cannot be established until testing and corrections have been completed to the satisfaction of the Engineer.

The costs for power, gas, labor, material, supplies, and everything else needed to successfully complete operational testing, shall be included in the unit contract prices related to the system being tested, unless specifically set forth otherwise in the proposal.

Operational and test periods, when required by the Engineer, shall not affect a manufacturer's guaranties or warranties furnished under the terms of the contract.

1-05.13 Superintendents, Labor and Equipment of Contractor

(August 14, 2013 APWA GSP)

Delete the sixth and seventh paragraphs of this section.

1-05.14 Cooperation with Other Contractors

(March 13, 1995, WSDOT GSP)

Section 1-05.14 is supplemented with the following:

Other Contracts or Other Work

It is anticipated that the following work adjacent to or within the limits of this project will be performed by others during the course of this project and will require coordination of the work:

1. Coordination with City Public Works forces as part of the project and ongoing city infrastructure maintenance and operation.

1-05.15 Method of Serving Notices

(January 4, 2024 APWA GSP and January 25, 2022 MLT GSP as underlined)

Revise the second paragraph to read:

All correspondence from the Contractor shall be served and directed to the Engineer. All correspondence from the Contractor constituting any notification, notice of protest, notice of dispute, or other correspondence constituting notification required to be furnished under the Contract, must be written in paper format, hand delivered or sent via certified mail delivery service with return receipt requested to the Engineer's office. Electronic copies such as e-mails or electronically delivered copies of correspondence will not constitute such notice and will not comply with the requirements of the Contract.

<u>Copies of Notices shall also be provided via email to the Project Engineer.</u>

Add the following new section:

1-05.16 Water and Power ***(New Section)***

(October 1, 2005 AWPA GSP)

The Contractor shall make necessary arrangements, and shall bear the costs for power and water necessary for the performance of the work, unless the contract includes power and water as a pay item.

1-05.16 Water and Power

(December 19, 2024 MLT GSP)

Supplement this section with the following:

Water for construction is available from the City of Mountlake Terrace. The charge for water used will be waived provided the following conditions and requirements are met:

1. Contractor shall apply for and obtain a temporary Hydrant Use Permit Application from the City of Mountlake Terrace.
2. The water is supplied through a City supplied double check valve and water meter assembly.
3. The water must be metered (for internal City records).
4. The water shall be used only for work on this project.
5. The Contractor shall use only those hydrants designated by the City and in strict accordance with its requirements for hydrant use.
6. Contractor shall pay the applicable deposit and fee for filing and handling in effect at the time of application. Current fees can be found here: City of Mountlake Terrace Civil Permit Fees.

Add the following new section:

1-05.18 Record Drawings ***(New Section)***

(March 8, 2013 APWA GSP)

The Contractor shall maintain one set of full size plans for Record Drawings, updated with clear and accurate red-lined field revisions on a daily basis, and within 2 business days after receipt of information that a change in Work has occurred. The Contractor shall not conceal any work until the required information is recorded.

This Record Drawing set shall be used for this purpose alone, shall be kept separate from other Plan sheets, and shall be clearly marked as Record Drawings. These Record Drawings shall be kept on site at the Contractor's field office, and shall be available for review by the Contracting Agency at all times. The Contractor shall bring the Record Drawings to each progress meeting for review.

The preparation and upkeep of the Record Drawings is to be the assigned responsibility of a single, experienced, and qualified individual. The quality of the Record Drawings, in terms of accuracy, clarity, and completeness, is to be adequate to allow the Contracting

Agency to modify the computer-aided drafting (CAD) Contract Drawings to produce a complete set of Record Drawings for the Contracting Agency without further investigative effort by the Contracting Agency.

The Record Drawing markups shall document all changes in the Work, both concealed and visible. Items that must be shown on the markups include but are not limited to:

- Actual dimensions, arrangement, and materials used when different than shown in the Plans.
- Changes made by Change Order or Field Order.
- Changes made by the Contractor.
- Accurate locations of storm sewer, sanitary sewer, water mains and other water appurtenances, structures, conduits, light standards, vaults, width of roadways, sidewalks, landscaping areas, building footprints, channelization and pavement markings, etc. Include pipe invert elevations, top of castings (manholes, inlets, etc.).

If the Contract calls for the Contracting Agency to do all surveying and staking, the Contracting Agency will provide the elevations at the tolerances the Contracting Agency requires for the Record Drawings.

When the Contract calls for the Contractor to do the surveying/staking, the applicable tolerance limits include, but are not limited to the following:

	Vertical	Horizontal
As-built sanitary & storm invert and grate elevations	± 0.01 foot	± 0.01 foot
As-built monumentation	± 0.001 foot	± 0.001 foot
As-built waterlines, inverts, valves, hydrants	± 0.10 foot	± 0.10 foot
As-built ponds/swales/water features	± 0.10 foot	± 0.10 foot
As-built buildings (fin. Floor elev.)	± 0.01 foot	± 0.10 foot
As-built gas lines, power, TV, Tel, Com	± 0.10 foot	± 0.10 foot
As-built signs, signals, etc.	N/A	± 0.10 foot

Making Entries on the Record Drawings:

- Use erasable colored pencil (not ink) for all markings on the Record Drawings, conforming to the following color code:
- Additions - Red
- Deletions - Green
- Comments - Blue
- Dimensions - Graphite

- Provide the applicable reference for all entries, such as the change order number, the request for information (RFI) number, or the approved shop drawing number.
- Date all entries.
- Clearly identify all items in the entry with notes similar to those in the Contract Drawings (such as pipe symbols, centerline elevations, materials, pipe joint abbreviations, etc.).

The Contractor shall certify on the Record Drawings that said drawings are an accurate depiction of built conditions, and in conformance with the requirements detailed above. The Contractor shall submit final Record Drawings to the Contracting Agency. Contracting Agency acceptance of the Record Drawings is one of the requirements for achieving Physical Completion.

Payment will be made for the following bid item:

Record Drawings (Minimum Bid $1,000)	Lump Sum

Payment for this item will be made on a prorated monthly basis for work completed in accordance with this section up to 75% of the lump sum bid. The final 25% of the lump sum item will be paid upon submittal and approval of the completed Record Drawings set prepared in conformance with these Special Provisions.

A minimum bid amount has been entered in the Bid Proposal for this item. The Contractor must bid at least that amount.

Add the following new section:

1-05.19 Notifications Relative to Contractor's Activities ***(New Section)***

(October 16, 2023 MLT GSP)

The Contracting Agency will make an initial written notification to owners and tenants of nearby properties of the pending commencement of the construction of the project. The Contracting Agency will also provide the initial notification of the commencement of construction to the public and franchise utilities and other agencies listed in the table below. This notification will be via an invitation to the Preconstruction Meeting or other method of notification deemed suitable by the Contracting Agency.

The Contractor shall be responsible for making detailed notification as follows:

The Contractor performing work in streets, right-of-ways, and easements shall notify all of the affected property owners, tenants, public and franchise utilities, and other agencies in regard to Contractor's operations so as to properly coordinate and expedite the work in such a manner as to cause the least amount of conflict and interference between the operations and those impacted by them.

The Contractor shall be responsible for notifying affected owners and tenants of affected properties of service interruptions necessary for water service transfers.

Attention is directed to Sections 1-07.16 and 1-07.17 of the Standard Specifications. Wherever in the course of the construction operation it becomes necessary to cause an outage of utilities, it shall be Contractor's responsibility to notify the affected users and Engineer not less than 48 hours in advance (not including the weekends and holidays) of the creation of such outage. Contractor shall make reasonable effort to minimize the duration of outages and shall estimate the length of time service will be interrupted and so notify the users. In the case of any utility outage that has exceeded or will exceed four hours, user contact shall again be made. Contractor shall arrange temporary service, if needed, at Contractor's expense.

Water main and service shut offs shall occur only for Tuesday through Thursday between the hours of 9:00 AM to 4:00 PM, unless otherwise authorized by the Engineer. Water main and hydrant foot valves shall be operated only by the City of Mountlake Terrace personnel. The Contractor shall coordinate these activities with the Contracting Agency and no water mains or private drives shall be closed off without a minimum of 48 hours' notice (not including the weekends and holidays) to the Contracting Agency and the private property owner. Should the Contracting Agency or the property owner have adequate reason, as determined by the Engineer, to defer access or water service shutoff at the scheduled time, the Contractor shall reschedule the work to meet the condition.

The Contractor shall notify property owners and tenants by written postings on doors, door knob hangers, or US Mail, unless otherwise approved by the Contracting Agency. The notifications shall be provided when access, and utility and other services will be interrupted. The notices shall be in such detail as to give the time of commencement and completion of work causing the interruptions. The notices are subject to review and approval by the Contracting Agency prior to delivery to the property owners and tenants.

The Contractor shall notify public and franchise utilities and other agencies in the manner requested by each at the Preconstruction Meeting or as otherwise communicated by those entities. The notifications shall be in such detail as to give the time of commencement and completion of work, and provide the name(s) of the construction superintendent in responsible charge or other individuals having full authority to execute the orders or directions of the Engineer in the event of an emergency. The methods of notification are subject to review and approval by the Contracting Agency prior to delivery.

The Contracting Agency shall be provided copies of written notices. The Contractor shall also provide a record of the date and the approximate time of delivery for all notifications, regardless of type.

All notifications shall be made sufficiently ahead of time to allow the affected property owners, tenants, public and franchise utilities, and other agencies to prepare for coordinating with the Contractor's operations and minimizing the impacts to themselves. The time intervals of prior notification are subject to review and approval by the

Contracting Agency, but shall be no less than a full 24 hours, unless the event is deemed an emergency by the Engineer.

The Contractor shall notify the following listed agencies and individuals, prior commencement of the work:

City of Mountlake Terrace – City Hall 23204 58th Avenue West Mountlake Terrace, WA 98043 Phone: (425) 775-1161	City of Mountlake Terrace Public Works 6204 – 215th Street SW Mountlake Terrace, WA 98043 Phone: (425) 670-8264
U.S. Postal Service @ Lynnwood Center 6817 – 208th Street SW Lynnwood, WA 98036-9998 Robert Radich, robert.s.radich@usps.gov Phone: (425) 774-8492	Ziply Mike Hakahan, OSP Engineer Phone: (425) 949-0230 mike.hakahan@ziply.com
Community Transit Shawn Nakano, CT Operations Supervisor 7100 Hardeson Road Everett, WA 98203 Phone: (425) 348-7191 Construction.supervisor@commtrans.org	Snohomish County PUD District 1 (Electric) Erin Burke P.O. Box 1107 Everett, WA 98206 Phone: (425) 783-4745 Email: EFBurke@SNOPUD.com
Puget Sound Energy (Gas) Eric Liaw, Project Manager Public Improvement @ Snohomish County Cell: (206) 495-3297 Fax: (425) 462-3355 Email: Eric.Liaw@pse.com 19900 N Creek Parkway, BOT-01H Bothell, WA 98011 www.PSE.com	Edmonds School District 15 Doug Jackman Transportation Routing/Planning Technician (425) 431-1401 Jackmand983@edmonds.wednet.edu Edmonds Bus Barn Dispatch Phone: (425) 431-1405 Ben Mount Transportation Program Director Phone: (425) 431-7233 mountb276@edmonds.wednet.edu Robert Thueringer Transportation Supervisor Phone: (425) 431-1427 thueringerr@edmonds.wednet.edu
Waste Management NW 1821 – 180th Street SE Bothell, WA 98012 Phone: 1-800-592-9995 www.wmnorthw1est.com	
Comcast Broadband Mike Fontenot 1525 75 St. SW, #200 Everett, WA 98023 Phone: (425) 218-9719	AT&T Steve Duppenthaler Cell: (425) 286-3822 Email: sd1891@att.com
Underground Utilities Location Center Phone: 1-800-424-5555	Snocom Phone: (425) 774-3583

1-06 CONTROL OF MATERIAL

1-06.1 Approval of Materials Prior to Use

(January 27, 2022 MLT GSP)

Section 1-06.1 is supplemented with the following:

At least fifteen (15) working days prior to use, the Contractor shall notify the Engineer of all proposed materials. The material submittal for approval shall come from a single approved source. If the material does not meet the requirements of the specifications or the supplier does not have the material in stock, the Contractor shall submit the material from another supplier or from another approved source. The City reserves the right to reject any or all submittal document(s) if the Contractor submits the same material from multiple sources. The City reserves the right not to review the submittal documents if the submittal documents are incomplete or include the same material from multiple sources. No payment will be made for installed materials not approved by the Engineer that may or may not meet specifications. If the Contractor installs materials that do not meet the requirements of the specifications and have not been approved by the Engineer, the materials shall be removed and disposed of and replaced at the Contractor's expense.

1-06.1(2) Request for Approval of Material (RAM)

(October 19, 2021 MLT GSP)

Replace the first sentence of this Section with the following:

The Contractor shall use the City RAM form for all proposed materials.

1-06.6 Recycled Materials

(January 4, 2016 APWA GSP)

Delete this section, including its subsections, and replace it with the following:

The Contractor shall make their best effort to utilize recycled materials in the construction of the project. Approval of such material use shall be as detailed elsewhere in the Standard Specifications.

Prior to Physical Completion the Contractor shall report the quantity of recycled materials that were utilized in the construction of the project for each of the items listed in Section 9-03.21. The report shall include hot mix asphalt, recycled concrete aggregate, recycled glass, steel furnace slag and other recycled materials (e.g. utilization of on-site material and aggregates from concrete returned to the supplier). The Contractor's report shall be provided on DOT form 350-075 Recycled Materials Reporting.

1-07 LEGAL RELATIONS AND RESPONSIBILITIES TO THE PUBLIC

1-07.1 Laws to be Observed

(October 1, 2005 APWA GSP)

Section 1-07.1 is supplemented with the following:

In cases of conflict between different safety regulations, the more stringent regulation shall apply.

The Washington State Department of Labor and Industries shall be the sole and paramount administrative agency responsible for the administration of the provisions of the Washington Industrial Safety and Health Act of 1973 (WISHA).

The Contractor shall maintain at the project site office, or other well be known place at the project site, all articles necessary for providing first aid to the injured. The Contractor shall establish, publish, and make known to all employees, procedures for ensuring immediate removal to a hospital, or doctor's care, persons, including employees, who may have been injured on the project site. Employees should not be permitted to work on the project site before the Contractor has established and made known procedures for removal of injured persons to a hospital or a doctor's care.

The Contractor shall have sole responsibility for the safety, efficiency, and adequacy of the Contractor's plant, appliances, and methods, and for any damage or injury resulting from their failure, or improper maintenance, use, or operation. The Contractor shall be solely and completely responsible for the conditions of the project site, including safety for all persons and property in the performance of the work. This requirement shall apply continuously and not be limited to normal working hours. The required or implied duty of the Engineer to conduct construction review of the Contractor's performance does not, and shall not, be intended to include review and adequacy of the Contractor's safety measures in, on, or near the project site.

1-07.1(2) Confined Space

(April 3, 2006 WSDOT GSP)

Section 1-07.1(2) is supplemented with the following:

Confined Space

Confined spaces are known to exist at the following locations:

- Existing pressure reducing valve (PRV) station vault; and
- Proposed PRV station vault.

The Contractor shall be fully responsible for the safety and health of all on-site workers and compliant with the Washington Administrative Code (WAC 296-809).

The Contractor shall prepare and implement a confined space program for each of the confined spaces identified above. The Contractors Confined Space program shall be sent to the Contracting Agency at least 30 days prior to the Contractor beginning work in or adjacent to the confined space. No work shall be performed in or adjacent to the confined space until the plan is submitted to the Engineer as required. The Contractor shall communicate with the Engineer to ensure a coordinated effort for providing and maintaining a safe worksite for both the Contracting Agency's and Contractor's workers when working in or near a confined space.

All costs to prepare and implement the confined space program shall be included in the bid prices for the various items associated with the confined space work.

1-07.2 Sales Tax

Delete this section, including its sub-sections, in its entirety and replace it with the following:

1-07.2 Sales Tax

(June 27, 2011 APWA GSP)

The Washington State Department of Revenue has issued special rules on the State sales tax. Sections 1-07.2(1) through 1-07.2(3) are meant to clarify those rules. The Contractor should contact the Washington State Department of Revenue for answers to questions in this area. The Contracting Agency will not adjust its payment if the Contractor bases a bid on a misunderstood tax liability.

The Contractor shall include all Contractor-paid taxes in the unit bid prices or other contract amounts. In some cases, however, state retail sales tax will not be included. Section 1-07.2(2) describes this exception.

The Contracting Agency will pay the retained percentage (or release the Contract Bond if a FHWB-funded Project) only if the Contractor has obtained from the Washington State Department of Revenue a certificate showing that all contract-related taxes have been paid (RCW 60.28.051). The Contracting Agency may deduct from its payments to the Contractor any amount the Contractor may owe the Washington State Department of Revenue, whether the amount owed relates to this contract or not. Any amount so deducted will be paid into the proper State fund.

1-07.2(1) State Sales Tax — Rule 171

WAC 458-20-171, and its related rules, apply to building, repairing, or improving streets, roads, etc., which are owned by a municipal corporation, or political subdivision of the state, or by the United States, and which are used primarily for foot or vehicular traffic. This includes storm or combined sewer systems within and included as a part of the street or road drainage system and power lines when such are part of the roadway lighting system. For work performed in such cases, the Contractor shall include Washington State Retail Sales Taxes in the various unit bid item prices, or other contract amounts, including those that the Contractor pays on the purchase of the materials, equipment, or supplies used or consumed in doing the work.

1-07.2(2) State Sales Tax — Rule 170

WAC 458-20-170, and its related rules, apply to the constructing and repairing of new or existing buildings, or other structures, upon real property. This includes, but is not limited to, the construction of streets, roads, highways, etc., owned by the state of Washington; water mains and their appurtenances; sanitary sewers and sewage disposal systems unless

such sewers and disposal systems are within, and a part of, a street or road drainage system; telephone, telegraph, electrical power distribution lines, or other conduits or lines in or above streets or roads, unless such power lines become a part of a street or road lighting system; and installing or attaching of any article of tangible personal property in or to real property, whether or not such personal property becomes a part of the realty by virtue of installation.

For work performed in such cases, the Contractor shall collect from the Contracting Agency, retail sales tax on the full contract price. The Contracting Agency will automatically add this sales tax to each payment to the Contractor. For this reason, the Contractor shall not include the retail sales tax in the unit bid item prices, or in any other contract amount subject to Rule 170, with the following exception.

Exception: The Contracting Agency will not add in sales tax for a payment the Contractor or a subcontractor makes on the purchase or rental of tools, machinery, equipment, or consumable supplies not integrated into the project. Such sales taxes shall be included in the unit bid item prices or in any other contract amount.

1-07.2(3) Services

The Contractor shall not collect retail sales tax from the Contracting Agency on any contract wholly for professional or other services (as defined in Washington State Department of Revenue Rules 138 and 244).

1-07.6 Permits and Licenses

(January 2, 2018 WSDOT GSP, Option 1)

Section 1-07.6 is supplemented with the following:

The Contracting Agency has obtained the below-listed permit(s) for this project. A copy of the permit(s) is attached as an appendix for informational purposes. Copies of these permits, including a copy of the Transfer of Coverage form, when applicable, are required to be onsite at all times.

Contact with the permitting agencies, concerning the below-listed permit(s), shall be made through the Engineer with the exception of when the Construction Stormwater General Permit coverage is transferred to the Contractor, direct communication with the Department of Ecology is allowed. The Contractor shall be responsible for obtaining Ecology's approval for any Work requiring additional approvals (e.g. Request for Chemical Treatment Form). The Contractor shall obtain additional permits as necessary. All costs to obtain and comply with additional permits shall be included in the applicable Bid items for the Work involved.

- City Business Licenses - The Contractor and subcontractors performing work within the City limits of Mountlake Terrace shall obtain business licenses from the City of Mountlake Terrace. The Contractor shall be held responsible to inform and to ensure all his Subcontractors obtain licenses. Failure of the prime or any

subcontractor to obtain licenses shall result in withholding any payments by the City. City business licenses are available through the Department of Revenue website where City requirements and fees are described. A link is available from the City website: https://www.cityofmlt.com/158/Business-Licenses.

- City Electrical Permits – Electrical and other permits issued under the jurisdiction of the City will be issued to the Contractor at no cost. The Contractor will still be required to make application for the permits and provide any required submittals.

- Other permits not issued under City jurisdiction - All permits, permission under franchises, licenses and bonds of a temporary nature necessary for and during the prosecution of the Work, and inspection fees in connection therewith shall be secured and paid for by the Contractor. If the City of Mountlake Terrace is required by the granting entity to secure such permits, permission under franchises, licenses and bonds and pay the fees on behalf of the Contractor, the costs incurred thereby shall be charged against the Contractor and offset against the Contract price.

1-07.7 Load Limits

1-07.7(1) General

(March 13, 1995 WSDOT GSP, Option 6)
Section 1-07.7(1) is supplemented with the following:

If the sources of materials provided by the Contractor necessitates hauling over roads other than city streets, the Contractor shall, at the Contractor's expense, make all arrangements for the use of the haul routes.

1-07.9 Wage

1-07.9(3) Apprentices

(February 17, 2026 APWA GSP)
Supplement this section with the following:

Apprentice Utilization
This Contract includes an Apprentice Utilization Requirement. Fifteen percent or more of project Labor Hours shall be performed by Apprentices unless Good Faith Efforts are accepted**.** Apprentice Utilization will be determined using the Department of Labor and Industries (L&I) online Prevailing Wage Intent & Affidavit (PWIA) system.

Definitions
For the purposes of this specification the following definitions apply:

1. Apprentice is a person enrolled in a State-approved Apprenticeship Training Program.

2. Apprentice Utilization is the apprentice labor hours, on the project, expressed as a percentage of project Labor Hours based on certified payrolls or the affidavits of wages paid, whichever is least. The percentage is not rounded up.

3. Apprentice Utilization Requirement is the minimum percentage of apprentice labor hours required by the Contract.

4. Good Faith Effort(s) (GFE) describes the Contractor's efforts to meet the Apprentice Utilization Requirement including but not limited to the specific steps as described elsewhere in this specification.

5. Labor Hours are the total hours performed by all workers receiving an hourly wage who are subject to prevailing wage requirements for work performed on the Contract as defined by RCW 39.04.310. Labor Hours are determined based on the scope of work performed by the individuals, rather than the title of their occupations in accordance with WAC 296-127.

6. State-approved Apprenticeship Training Program is an apprenticeship training program approved by the Washington State Apprenticeship Council.

7. Apprentice Wage Rates are the applicable wage rates that are to be paid for an apprentice registered in a training program, separate from Journey Level rates, as set by the Washington State Apprenticeship Training Council and Washington State Department of Labor and Industries (L&I).

Electronic Reporting
The Contractor shall use the PWIA System to submit the "Apprentice Utilization Plan". Reporting instructions are available in the application.

Apprentice Utilization Plan
The Contractor shall submit an "Apprentice Utilization Plan" by filling out the Apprentice Utilization Plan Form (WSDOT Form 424-004) or other form approved by the Contracting Agency within 30 calendar days of Contract execution, however no later than the preconstruction meeting, demonstrating how and when they intend to achieve the Apprentice Utilization Requirement. The Plan shall be in sufficient detail for the Engineer to track the Contractor's progress in meeting the utilization requirements. An Apprentice Utilization Plan shall be updated and resubmitted as the Work progresses or when requested by the Engineer or other Contracting Agency representative.

If the Contractor is unable to demonstrate the ability to meet the Apprentice Utilization Requirement with their initial Apprentice Utilization Plan submission, an effort must be made to find additional registered apprentices to perform on the contract. If after attempts have been made at every tier and every scope, the Contractor must submit GFE documentation to the Contracting Agency. The Contractor shall actively seek out opportunities to meet the Apprentice Utilization Requirement during the construction Work.

Subcontracts
The Contractor must not require subcontractors to attain more than 15% of a subcontract's proposed labor hours for the subcontract's scope of Work.

Contacts
The Contractor may obtain information on State-approved Apprenticeship Training Programs by using the Apprentice Registration and Tracking System (ARTS) https://secure.lni.wa.gov/arts-public/#/program-search or contacting the Department of Labor and Industries directly at:

Specialty Compliance and Services Division, Apprenticeship Section, P.O. Box 44530, Olympia, WA 98504-4530 or by phone at (360) 902-5320.

Compliance
The Contractor is expected to make attempts to employ Apprentices and shall include the requirement in any subcontracts at any tier. In the event that the Contractor is unable to achieve the Apprentice Utilization Requirement, the Contractor shall submit GFE documentation demonstrating the efforts and attempts they made. Final GFE documentation shall be submitted to the Contracting Agency after Substantial Completion but no later than 30 days after Physical Completion.

If the Contractor fails to actively attempt to employ Apprentices, submit GFE documentation, or if the Engineer does not approve the GFE, the Contractor will be assessed a penalty. The Engineer will provide the Contractor with a written notice at Final Acceptance of the project informing the Contractor of the failure to comply with this specification which will include a calculation of the penalty to be assessed as provided for in the Payment section in this special provision.

If the Contractor achieves the required Apprentice Utilization an incentive will be assessed with Final Payment.

Good Faith Efforts
The GFE shall document the attempts (efforts) the Contractor (and any subcontractor at any tier) made to meet the Apprentice Utilization Requirement. Emails, letters, or other written communications with letterhead, titles, and contact information are required.

Documentation must include one or more of the following accepted GFEs:

1. Demonstrated Lack of Availability of Apprentices. Correspondence from State-approved Apprenticeship Training Program(s), with project specific responses confirming there is a lack of availability of Apprentices for this project.

2. Demonstrated Disproportionate Ratio of Material/Equipment/Products to Labor Hours. Documentation explaining the bid includes a disproportionate high cost of

material/equipment/products to Labor Hours. (E.g., a $2 M estimated contract includes $1 M or more in procurement costs of equipment to be installed.)

3. Demonstrated Lack of Necessary Labor Hours. Correspondence from a State-approved Apprentice Training Programs confirming there is not enough time in the project to meet required journey level to apprentice training ratios.

4. Demonstrated Lack of Available Approved Programs. Correspondence from State-approved Apprentice Training Programs, confirming there are no programs that train for the scopes included/anticipated on the project. Contractor and state programs to submit training program detail needs and details that could be used for future program creation.

5. Funding Precedent. Documentation that shows conflicting, more restrictive, or precedent requirements for other training on the Project. Examples include, but are not limited to, Tribal Employment Rights (TERO), Federal Training Hours, or Special Training that affect the ability to use state-registered apprentices.

6. Warranty Work. Documentation from Original Equipment Manufacturers, or similar, confirming that Work performed must only be completed by certified journey-level installers or risk voiding warranty, or similar.

7. Other Effort. The Contractor may submit other evidence, documentation, or rationale for not being able to achieve the required Apprentice Utilization that are not covered in the other efforts named. Other efforts will still need to be corroborated by an independent, knowledgeable third-party.

Contractors may receive a GFE credit for graduated Apprentice hours through the end of the calendar year for all projects worked on as long as the Apprentice remains continuously employed with the same Contractor/subcontractor they were working for when they graduated. If an Apprentice graduates during employment on a project of significant duration, they may be counted towards a GFE credit for up to one year after their graduation or until the end of the project (whichever comes first). Determination of whether Contract requirements were met in good faith will be made by subtracting the hours from the journeyman total reported hours for the project and adding them to the apprentice hour total. If the new utilization percentage meets the Contract requirement, the Contractor will be reported as meeting the requirement in good faith.

Approving Good Faith Efforts

The Contracting Agency will review submitted Good Faith Efforts and issue a determination. The Engineer may request additional information, documentation, evidence or similar in order to approve such efforts. A determination by the Engineer is final. The approved Good Faith Efforts will be loaded into the PWIA system by the Contracting Agency.

Measurement
Apprenticeship hours used to calculate the item "Apprentice Incentive/Penalty", by calculation, will be measured for each hour of Work performed by an apprentice as shown on the Monthly Apprentice Utilization Report, based on certified payrolls or the affidavits of wages paid, whichever is least. The percentage is not rounded up. The calculation of incentive/penalty will be assessed based on the Final Payment for Contractors who meet the Apprentice Utilization Requirement without a reduction by Good Faith Effort.

Payment
Payment will be made for the following Bid Items when included in the proposal:

"Apprenticeship Incentive/Penalty", by calculation.

When the Contractor meets the apprenticeship requirement of 15% an incentive will be assessed. When the Contractor fails to meet the apprenticeship requirement of 15%, a penalty will be assessed for each hour that is not achieved, unless a Good Faith Effort is approved by the Contracting Agency.

Apprenticeship Incentive/Penalty will be calculated as described below:

Percent of requirement met	Incentive	Penalty per hour of unmet requirement
100%	$2,000.00	N/A
90% to 99%	N/A	$2.00
75% to 89%	N/A	$3.50
50% to 74%	N/A	$5.00
1% to 49%	N/A	$7.50
0%	N/A	$10.0

For the purpose of providing a common proposal for all bidders, the Contracting Agency has entered an Incentive amount in the proposal to become a part of the total bid by the Contractor.

The Contractor shall include all related costs in the unit Bid prices of the Contract, included but not limited to implementing, developing, documenting, and administering an apprenticeship utilization program, recording and reporting hours and all other costs to comply with this provision.

1-07.9(5) Required Documents

1-07.9(5)A Required Documents
(February 17, 2026 APWA GSP, Option A)
Revise this section to read:

All Statements of Intent to Pay Prevailing Wages and Affidavits of Wages Paid, including

a signed Statement of Compliance for Federal-aid projects, shall be submitted to the Engineer and entered into the State L&I online Prevailing Wage Intent & Affidavit (PWIA) system. In addition to entries made in the PWIA system, all Certified Payrolls must be submitted weekly to the Contracting Agency with a legally valid signature.

1-07.16 Protection and Restoration of Property

1-07.16(1) Private/Public Property

(June 22, 2007 MLT GSP)

Section 1-07.16(1) is supplemented with the following:

All existing survey monuments and property corner markers shall be protected from movement by Contractor. All existing markers and monuments that must be removed for construction purposes are to be referenced by survey ties and then replaced by Contractor. All existing markers and monuments that are to remain during construction and that will likely be disturbed by the Contractor's operations are to be referenced by survey ties by Contractor. All existing survey monuments and property corner markers disturbed or removed by Contractor's operations which, in the opinion of Engineer, were not required to be removed for construction purposes shall be replaced, at Contractor's own expense, by a Professional Land Surveyor registered in the State of Washington.

1-07.16(2) Vegetation Protection and Restoration

(August 2, 2010, WSDOT GSP, Option 1)

Section 1-07.16(2) is supplemented with the following:

Vegetation and soil protection zones for trees shall extend out from the trunk to a distance of 1 foot radius for each inch of trunk diameter at breast height.

Vegetation and soil protection zones for shrubs shall extend out from the stems at ground level to twice the radius of the shrub.

Vegetation and soil protection zones for herbaceous vegetation shall extend to encompass the diameter of the plant as measured from the outer edge of the plant.

1-07.16(4) Archaeological and Historical Objects

1-07.16(4)A Inadvertent Discovery of Human Skeletal Remains

(January 25, 2022 MLT GSP)

Section 1-07.16(4)A is supplemented with the following:

Inadvertent Discovery Language Posters, provided as an Appendix, shall be posted throughout the construction area.

1-07.17 Utilities and Similar Facilities

(March 15, 2021 MLT GSP)

Section 1-07.17 is supplemented with the following:

Existing communications junction boxes, manholes, and/or vaults shall be adjusted to finished grade by the franchise utility owner. Existing natural gas valves boxes shall be adjusted to finished grade by Puget Sound Energy (PSE) forces. The contractor shall coordinate with the franchise utilities, mark the locations of the existing facilities on new pavement, and allow the franchise utilities safe access to the adjustment locations. The Contractor shall coordinate the work with the utility companies and agencies involved in accordance with Sections 1-05.14.

Costs for coordinating with franchise utilities, locating and marking utilities, and providing access to the franchise utilities shall be incidental to the work of the contract.

1-07.17 Utilities and Similar Facilities

(October 3, 2022 WSDOT GSP, Option 2)

Section 1-07.17 is supplemented with the following:

Locations and dimensions shown in the Plans for existing facilities are in accordance with available information obtained without uncovering, measuring, or other verification.

Public and private utilities, or their Contractors, will furnish all work necessary to adjust, relocate, replace, or construct their facilities unless otherwise provided for in the Plans or these Special Provisions. Such adjustment, relocation, replacement, or construction will be done during the prosecution of the work for this project. It is anticipated that utility adjustment, relocation, replacement, or construction within the project limits will be completed as follows:

- Adjusting of utility castings for water, storm, and sewer systems by the Contractor.

The Contractor shall attend a mandatory utility preconstruction meeting with the Engineer, all affected Subcontractors, and all utility owners and their Contractors prior to beginning onsite work.

The following addresses and telephone numbers of utility companies or their Contractors that will be adjusting, relocating, replacing or constructing utilities within the project limits are supplied for the Contractor's use:

City of Mountlake Terrace City Hall 23204 58th Avenue West Mountlake Terrace, WA 98043 Phone: (425) 775-1161	City of Mountlake Terrace Public Works 6204 215th St, SW Mountlake Terrace, WA 98043 (425) 670-8264

Snohomish County PUD District 1 (Electric) Kenneth Luu P.O. Box 1107 Everett, WA 98206 (425) 783-4745 Email: KCLuu@Snopud.com	Comcast Broadband Mike Fontenot 1525 75 St. SW, #200 Everett, WA 98023 Phone: (425) 218-9719
Puget Sound Energy Aaron Hines, Engineer II (253) 307-0767 Email: aaron.hines@pse.com Eric Liaw, Project Manager (425) 495-3297 Email: Eric.Liaw@pse.com www.pse.com/construction-services/ 19900 N Creek Parkway, BOT-01H Bothell, WA 98011	Ziply Mike Hakahan, OSP Engineer Phone: (425) 949-0230 mike.hakahan@ziply.com
	Snohomish County 911 Services (Sno911) Phone: (425) 774-3583
	Underground Utilities Location Center Call Before You Dig 1-800-424-5555 / 811

Add the following new section:

1-07.17(3) Utility Potholing ***(New Section)***

(February 26, 2024 MLT GSP)

Description and Construction Requirements

The Contractor shall pothole utilities as directed by the Engineer to determine the horizontal and vertical location of existing utilities in advance of the Contractor's operations.

Potholing shall be for the following purposes:

1. To determine the vertical and horizontal location of existing utilities in advance of the Contractor's excavation operations.

2. As a means of the Contractor determining the means and methods of constructing the improvements to be installed by the Contractor.

Backfill shall be as designated by the Engineer.

The horizontal and vertical locations of potholed utilities shall be shown on the Contractor maintained redlined drawings for the project, accurate to the nearest half-inch.

1-07.17(3)B Measurement

(February 26, 2024 MLT GSP)

"Potholing" will be measured per each.

1-07.17(3)C Payment

(February 26, 2024 MLT GSP)

Payment will be made for the following bid item included in the Proposal:

"Potholing", per each.

The unit contract price per each for "Potholing" shall be full compensation all labor, materials, tools, and equipment required to complete each pothole including excavation, location, documentation, backfill, and restoration.

1-07.18 Public Liability and Property Damage Insurance

Delete this section in its entirety, and replace it with the following:

1-07.18 Insurance

(February 17, 2026 APWA GSP)

1-07.18(1) General Requirements

A. The Contractor shall procure and maintain the insurance described in all subsections of section 1-07.18 of these Special Provisions, from insurers with a current A. M. Best rating of not less than A-: VII and licensed to do business in the State of Washington. The Contracting Agency reserves the right to approve or reject the insurance provided, based on the insurer's financial condition.

B. The Contractor shall keep this insurance in force without interruption from the commencement of the Contractor's Work through the term of the Contract and for thirty (30) days after the Physical Completion date, unless otherwise indicated below.

C. If any insurance policy is written on a claims-made form, its retroactive date, and that of all subsequent renewals, shall be no later than the effective date of this Contract. The policy shall state that coverage is claims made and state the retroactive date. Claims-made form coverage shall be maintained by the Contractor for a minimum of 36 months following the Completion Date or earlier termination of this Contract, and the Contractor shall annually provide the Contracting Agency with proof of renewal. If renewal of the claims made form of coverage becomes unavailable, or economically prohibitive, the Contractor shall purchase an extended reporting period ("tail") or execute another form of guarantee acceptable to the Contracting Agency to assure financial responsibility for liability for services performed.

D. The Contractor's Automobile Liability, Commercial General Liability and Excess or Umbrella Liability insurance policies shall be primary and non-contributory insurance as respects the Contracting Agency's insurance, self-insurance, or self-insured pool coverage. Any insurance, self-insurance, or self-insured pool coverage maintained by the Contracting Agency shall be excess of the Contractor's insurance and shall not contribute with it.

E. The Contractor shall provide the Contracting Agency and all additional insureds with

written notice of any policy cancellation, within two business days of their receipt of such notice.

F. The Contractor shall not begin Work under the Contract until the required insurance has been obtained and approved by the Contracting Agency.

G. Failure on the part of the Contractor to maintain the insurance as required shall constitute a material breach of contract, upon which the Contracting Agency may, after giving five business days' notice to the Contractor to correct the breach, immediately terminate the Contract or, at its discretion, procure or renew such insurance and pay any and all premiums in connection therewith, with any sums so expended to be repaid to the Contracting Agency on demand, or at the sole discretion of the Contracting Agency, offset against funds due the Contractor from the Contracting Agency.

H. All costs for insurance shall be incidental to and included in the unit or lump sum prices of the Contract and no additional payment will be made.

I. Under no circumstances shall a wrap up policy be obtained, for either initiating or maintaining coverage, to satisfy insurance requirements for any policy required under this Section. A "wrap up policy" is defined as an insurance agreement or arrangement under which all the parties working on a specified or designated project are insured under one policy for liability arising out of that specified or designated project.

1-07.18(2) Additional Insured

All insurance policies, with the exception of Workers Compensation, and of Professional Liability and Builder's Risk (if required by this Contract) shall name the following listed entities as additional insured(s) using the forms or endorsements required herein:

- the Contracting Agency and its officers, elected officials, employees, agents, and volunteers

The above-listed entities shall be additional insured(s) for the full available limits of liability maintained by the Contractor, irrespective of whether such limits maintained by the Contractor are greater than those required by this Contract, and irrespective of whether the Certificate of Insurance provided by the Contractor pursuant to 1-07.18(4) describes limits lower than those maintained by the Contractor.

For Commercial General Liability insurance coverage, the required additional insured endorsements shall be at least as broad as ISO forms CG 20 10 10 01 for ongoing operations and CG 20 37 10 01 for completed operations.

1-07.18(3) Subcontractors

The Contractor shall cause each subcontractor of every tier to provide insurance coverage that complies with all applicable requirements of the Contractor-provided insurance as set forth herein, except the Contractor shall have sole responsibility for determining the limits of coverage required to be obtained by subcontractors.

The Contractor shall ensure that all subcontractors of every tier add all entities listed in 1-07.18(2) as additional insureds, and provide proof of such on the policies as required by that section as detailed in 1-07.18(2) using an endorsement as least as broad as ISO CG 20 10 10 01 for ongoing operations and CG 20 37 10 01 for completed operations.

Upon request by the Contracting Agency, the Contractor shall forward to the Contracting Agency evidence of insurance and copies of the additional insured endorsements of each subcontractor of every tier as required in 1-07.18(4) Verification of Coverage.

1-07.18(4) Verification of Coverage

The Contractor shall deliver to the Contracting Agency a Certificate(s) of Insurance and endorsements for each policy of insurance meeting the requirements set forth herein when the Contractor delivers the signed Contract for the Work. Failure of Contracting Agency to demand such verification of coverage with these insurance requirements or failure of Contracting Agency to identify a deficiency from the insurance documentation provided shall not be construed as a waiver of Contractor's obligation to maintain such insurance.

Verification of coverage shall include:

1. An ACORD certificate or a form determined by the Contracting Agency to be equivalent.

2. Copies of all endorsements naming Contracting Agency and all other entities listed in 1-07.18(2) as additional insured(s), showing the policy number. The Contractor may submit a copy of any blanket additional insured clause from its policies instead of a separate endorsement.

3. Any other amendatory endorsements to show the coverage required herein.

4. A notation of coverage enhancements on the Certificate of Insurance shall not satisfy these requirements – actual endorsements must be submitted.

5. All insurance coverage maintained or procured pursuant to this agreement shall be endorsed to waive subrogation against the Contracting Agency, its elected or appointed officers, agents, officials, employees, and volunteers or shall specifically allow the Contractor or others providing insurance evidence in compliance with these Specifications to waive their right of subrogation prior to a loss. The Contractor hereby waives its own right of subrogation against the Contracting Agency and shall require similar written express waivers and insurance clauses from each of its subcontractors.

Upon request by the Contracting Agency, the Contractor shall forward to the Contracting Agency a full and certified copy of the insurance policy(s). If Builders Risk insurance is required on this Project, a full and certified copy of that policy is required when the Contractor delivers the signed Contract for the Work.

1-07.18(5) Coverages and Limit

The insurance shall provide the minimum coverages and limits set forth below. Contractor's maintenance of insurance, its scope of coverage, and limits as required herein shall not be construed to limit the liability of the Contractor to the coverage provided by such insurance, or otherwise limit the Contracting Agency's recourse to any remedy available at law or in equity.

All deductibles and self-insured retentions must be disclosed and are subject to approval by the Contracting Agency. The cost of any claim payments falling within the deductible or self-insured retention shall be the responsibility of the Contractor. In the event an additional insured incurs a liability subject to any policy's deductibles or self-insured retention, said deductibles or self-insured retention shall be the responsibility of the Contractor.

1-07.18(5)A Commercial General Liability

Commercial General Liability insurance shall be written on coverage forms at least as broad as ISO occurrence form CG 00 01, including but not limited to liability arising from premises, operations, stop gap liability, independent contractors, products-completed operations, personal and advertising injury, and liability assumed under an insured contract. There shall be no exclusion for liability arising from explosion, collapse or underground property damage.

The Commercial General Liability insurance shall be endorsed to provide a per project general aggregate limit, using ISO form CG 25 03 05 09 or an equivalent endorsement.

Contractor shall maintain Commercial General Liability Insurance arising out of the Contractor's completed operations for at least three years following Substantial Completion of the Work.

Such policy must provide the following minimum limits:

$2,000,000	Each Occurrence
$3,000,000	General Aggregate
$3,000,000	Products & Completed Operations Aggregate
$2,000,000	Personal & Advertising Injury each offence
$2,000,000	Stop Gap / Employers' Liability each accident

1-07.18(5)B Automobile Liability

Automobile Liability shall cover owned, non-owned, hired, and leased vehicles; and shall be written on a coverage form at least as broad as ISO form CA 00 01. If the Work involves the transport of pollutants, the automobile liability policy shall include MCS 90 and CA 99 48 endorsements.

Such policy must provide the following minimum limit:

$1,000,000	Combined single limit each accident

1-07.18(5)C Workers' Compensation

The Contractor shall comply with Workers' Compensation coverage as required by the Industrial Insurance laws of the State of Washington.

1-07.23 Public Convenience and Safety

1-07.23(1) Construction Under Traffic

(May 2, 2017 APWA GSP)

Revise the third sentence of the second paragraph to read:

Accessibility to existing or temporary pedestrian push buttons shall not be impaired; if approved by the Contracting Agency activating pedestrian recall timing or other accommodation may be allowed during construction.

1-07.23(1) Construction Under Traffic

(February 6, 2023, WSDOT GSP, Option 5)

Section 1-07.23(1) is supplemented with the following:

Lane, ramp, shoulder, and roadway closures are subject to the following restrictions:

- Streets and avenues shall not have restricted traffic except during working hours when the Contractor is on site and the construction is underway.
- 66th Avenue W and 226th Place W / 68th Place W / 228th Street SW are located on school bus routes. The Contractor shall coordinate lane closures and detour activities occurring on either of these roadways with both the Engineer and the Edmonds School District Transportation Division. The Contractor shall contact Doug Jackman (Jackmand983@edmonds.wednet.edu, 425-431-1401) and Ben Mount (mountb276@edmonds.wednet.edu, 425-431-7233) at least two school days prior to road and/or lane closures. Contact "Edmonds Bus Barn Dispatch" at (425-431-1405) the morning of road and/or lane closures.
- Parking restrictions in the immediate area of construction will be allowed. All temporary "No Parking" is to be coordinated with the City's Construction Inspector, David Marschall (425-744-6277). Temporary "No Parking" signs are to be in place 72 hours prior to the effective date and time on the signs. See Contract Provisions Section 1-10.1(2).

If the Engineer determines the permitted closure hours adversely affect traffic, the Engineer may adjust the hours accordingly. The Engineer will notify the Contractor in writing of any change in the closure hours. Exceptions to these restrictions are listed below and when applicable take precedence over closures listed above. The Engineer may also consider on a case-by-case basis additional exceptions following a written request by the Contractor.

Lane closures are not allowed on any of the following:

1. A holiday,

2. A holiday weekend; holidays that occur on Friday, Saturday, Sunday or Monday are considered a holiday weekend. A holiday weekend includes Saturday, Sunday, and the holiday.
3. After 12:00 PM (noon) on the day prior to a holiday or holiday weekend.
4. Before 9:00 AM on the day after the holiday or holiday weekend.
5. The two-hour period prior to and the two-hour period after the following special events:

   Tour de Terrace

   It shall be the Contractor's responsibility to obtain the dates and times of all events.

General Restrictions

Construction vehicles using a closed traffic lane shall travel only in the normal direction of traffic flow unless expressly allowed in an accepted traffic control plan. Construction vehicles shall be equipped with flashing or rotating amber lights.

No two consecutive on-ramps, off-ramps, or intersections shall be closed at the same time and only one ramp at an interchange shall be closed, unless specifically shown in the Plans.

Roads or ramps that are designated as part of a detour shall not be closed or restricted during the implementation of that detour, unless specifically shown in the Plans.

Controlled Access

No special access or egress shall be allowed by the Contractor other than normal legal movements or as shown in the Plans.

Contractor's vehicles of 10,000 GVW or greater shall not exit or enter a lane open to public traffic except as follows:

Egress and ingress shall only occur during the hours of allowable lane closures, and:

1. For exiting an open lane of traffic, by decelerating in a lane that is closed during the allowable hours for lane closures.
2. For entering an open lane of traffic, by accelerating in a closed lane during the allowable hours for lane closures.

Traffic control vehicles are excluded from the gross vehicle weight requirement. If placing construction signs will restrict traveled lanes, then the work will be permitted during the hours of allowable lane closures.

Advance Notification

The Contractor shall notify the Engineer in writing of any traffic impacts related to lane closure, shoulder closure, sidewalk closure, or any combination for the week by 12:00 p.m. (noon) Wednesday the week prior to the stated impacts.

The Contractor shall notify the Engineer in writing ten working days in advance of any traffic impacts related to full roadway closure, ramp closure, or both.

The Contractor shall notify the Engineer in writing of any changes to the stated traffic impacts a minimum of 48 hours prior to the traffic impacts.

1-07.23(2) Construction and Maintenance of Detours

(July 5, 2023 MLT GSP)

This section is supplemented with the following:

Use of detours is allowed following submittal of plans and approval by the Engineer. Use of detours is restricted to the 226th Place SW / 68th Place W / 228th Street SW corridor (from 66th Avenue W to 73rd Place W), unless otherwise approved by the Engineer. If utilized by the Contractor, the detours may be in operation only between the hours of 9 AM and 4 PM on working days while construction is in progress. The road may be closed to all traffic except local access for residents, emergency response vehicles, garbage trucks, and mail services. The Contractor shall notify the Engineer at least ten working days in advance of establishing a detour route.

All costs associated with supplying the devices, installation, construction, maintenance, and removal of all detours shall be included in the lump sum price of "Project Temporary Traffic Control".

1-07.24 Rights of Way

(April 22, 2025 APWA GSP and November 14, 2023 MLT GSP as underlined)

Delete this section and replace it with the following:

Street Right of Way lines, limits of easements, and limits of construction permits are indicated in the Plans. The Contractor's construction activities shall be confined within these limits unless arrangements for use of private property are made as described below.

Generally, the Contracting Agency will have obtained, prior to bid opening, all rights of way and easements, both permanent and temporary, necessary for carrying out the work. Exceptions to this are noted in the Bid Documents or will be brought to the Contractor's attention by a duly issued Addendum.

Whenever any of the work is accomplished on or through property other than public Right of Way, the Contractor shall meet and fulfill all covenants and stipulations of any easement agreement obtained by the Contracting Agency from the owner of the private property. Copies of the easement agreements may be included in the Contract Provisions or made available to the Contractor as soon as practical after they have been obtained by the Engineer.

Whenever easements or rights of entry have not been acquired prior to advertising, these areas are so noted in the Plans. The Contractor shall not proceed with any portion of the work in areas where right of way, easements or rights of entry have not been acquired until

the Engineer certifies to the Contractor that the right of way or easement is available or that the right of entry has been received. If the Contractor is delayed due to acts of omission on the part of the Contracting Agency in obtaining easements, rights of entry or right of way, the Contractor will be entitled to an extension of time. The Contractor agrees that such delay shall not be a breach of contract.

Each property owner shall be given 15 days' notice prior to entry by the Contractor. This includes entry onto easements and private property where private improvements must be adjusted.

The Contractor shall be responsible for providing, without expense or liability to the Contracting Agency, any additional land and access thereto that the Contractor may desire for temporary construction facilities, storage of materials, or other Contractor needs. However, before using any private property, whether adjoining the work or not, the Contractor shall file with the Engineer a written permission of the private property owner, and, upon vacating the premises, a written release from the property owner of each property disturbed or otherwise interfered with by reasons of construction pursued under this contract. The statement shall be signed by the private property owner, or proper authority acting for the owner of the private property affected, stating that permission has been granted to use the property and all necessary permits have been obtained or, in the case of a release, that the restoration of the property has been satisfactorily accomplished. The statement shall include the parcel number, address, and date of signature. Written releases must be filed with the Engineer before the Completion Date will be established.

1-08 PROSECUTION AND PROGRESS

Add the following new section:

1-08.0 Preliminary Matters ***(New Section)***

(May 25, 2006 APWA GSP)

Add the following new section:

1-08.0(1) Preconstruction Conference ***(New Section)***

(October 21, 2025 APWA GSP)

Prior to the Contractor beginning the work, a preconstruction conference will be held between the Contractor, the Engineer and such other interested parties as may be invited. The purpose of the preconstruction conference will be:

1. To review the initial progress schedule;
2. To establish a working understanding among the various parties associated or affected by the work;
3. To establish and review procedures for progress payment, notifications, approvals, submittals, etc.;
4. To review Training or Apprenticeship Plans, when applicable.

5. To discuss FSBE Goals when applicable.
6. To establish normal working hours for the work;
7. To review safety standards and traffic control; and
8. To discuss such other related items as may be pertinent to the work.

The Contractor shall prepare and submit at the preconstruction conference the following:

1. A breakdown of all lump sum items;
2. A preliminary schedule of working drawing submittals; and
3. A list of material sources for approval if applicable.

Add the following new section:

1-08.0(2) Hours of Work ***(New Section)***

(February 17, 2026 APWA GSP)

Except in the case of emergency or unless otherwise approved by the Engineer, the normal working hours for the Contract shall be any consecutive 8-hour period between 7:00 a.m. and 6:00 p.m. Monday through Friday, exclusive of a lunch break. If the Contractor desires different than the normal working hours stated above, the request must be submitted in writing prior to the preconstruction conference, subject to the provisions below. The working hours for the Contract shall be established at or prior to the preconstruction conference.

All working hours and days are also subject to local permit and ordinance conditions (such as noise ordinances).

If the Contractor wishes to deviate from the established working hours, the Contractor shall submit a written request to the Engineer for consideration. This request shall state what hours are being requested, and why. Requests shall be submitted for review no later than 5 working days prior to the day(s) the Contractor is requesting to change the hours.

If the Contracting Agency approves such a deviation, such approval may be subject to certain other conditions, which will be detailed in writing. For example:

1. On non-Federal aid projects, requiring the Contractor to reimburse the Contracting Agency for the costs in excess of straight-time costs for Contracting Agency representatives who worked during such times. (The Engineer may require designated representatives to be present during the Work. Representatives who may be deemed necessary by the Engineer include, but are not limited to: survey crews; personnel from the Contracting Agency's material testing lab; inspectors; and other Contracting Agency employees or third party consultants when, in the opinion of the Engineer, such Work necessitates their presence.)
2. Considering the Work performed on Saturdays, Sundays, and holidays as working days with regard to the contract time.
3. Considering multiple work shifts as multiple working days with respect to contract time even though the multiple shifts occur in a single 24-hour period.

4. If a 4-10 work schedule is requested and approved the non-working day for the week will be charged as a working day.

If Davis Bacon wage rates apply to this Contract, all requirements must be met and recorded properly on certified payroll.

1-08.1 Subcontracting

(December 30, 2022 APWA GSP, Option A)

Section 1-08.1 is supplemented with the following:

Prior to any subcontractor or lower tier subcontractor beginning work, the Contractor shall submit to the Engineer a certification (WSDOT Form 420-004) that a written agreement between the Contractor and the subcontractor or between the subcontractor and any lower tier subcontractor has been executed. This certification shall also guarantee that these subcontract agreements include all the documents required by the Special Provision Federal Agency Inspection.

A subcontractor or lower tier subcontractor will not be permitted to perform any work under the contract until the following documents have been completed and submitted to the Engineer:

1. Request to Sublet Work (WSDOT Form 421-012), and

2. Contractor and Subcontractor or Lower Tier Subcontractor Certification for Federal-aid Projects (WSDOT Form 420-004).

The Contractor shall submit to the Engineer a completed Monthly Retainage Report (WSDOT Form 272-065) within 15 calendar days after receipt of every monthly progress payment until every subcontractor and lower tier subcontractor's retainage has been released.

The Contractor's records pertaining to the requirements of this Special Provision shall be open to inspection or audit by representatives of the Contracting Agency during the life of the contract and for a period of not less than three years after the date of acceptance of the contract. The Contractor shall retain these records for that period. The Contractor shall also guarantee that these records of all subcontractors and lower tier subcontractors shall be available and open to similar inspection or audit for the same time period.

1-08.1(1) General

(February 17, 2026 APWA GSP)

Delete the first paragraph, and replace it with the following:

For purposes of this Section, all Work that is not self-performed by the Contractor will be considered as subcontracting except the following, hereinafter referred to as materials

supplying: (1) when purchased directly by the Contractor - sand, gravel, crushed stone, crushed slag, batched concrete aggregates, ready-mix concrete, off-site fabricated structural steel, other off-site fabricated items, and any other materials supplied by established and recognized commercial plants; or (2) delivery of these materials to the Work site in vehicles owned or operated by such plants or by recognized independent or commercial hauling companies hired by those commercial plants; or (3) the presence of a uniformed law enforcement officer and marked law enforcement vehicle.

1-08.1(7) Payments to Subcontractors and Lower-Tier Subcontractors

1-08.1(7)C Subcontractor Retainage

(February 13, 2024 WSDOT GSP)

The first sentence in the last paragraph of Section 1-08.1(7)C is revised to read:

If the Contractor fails to comply with the requirements of this Section and the first-tier subcontractor's retainage or retainage bond is wrongfully withheld, the Contractor will be subject to the actions described in Section 1-08.1(10).

1-08.3 Progress Schedule

1-08.3(2) Progress Schedule Types

1-08.3(2)A Type A Progress Schedule

(February 17, 2026 APWA GSP and October 16, 2023 MLT GSP as underlined)

Revise this section to read:

The Contractor shall submit 1 copies <u>electronically (in PDF format)</u> of a Type A Progress Schedule no later than <u>1 day before</u> at the preconstruction conference, or some other mutually agreed upon submittal time. The schedule may be a critical path method (CPM) schedule, bar chart, or other standard schedule format. Regardless of which format is used, the schedule shall identify the critical path. The Engineer will evaluate the Type A Progress Schedule and accept or return the schedule for corrections within 15 calendar days of receiving the submittal.

1-08.4 Prosecution of Work

Delete this section and replace it with the following:

1-08.4 Notice to Proceed and Prosecution of Work

(February 17, 2026 APWA GSP)

Notice to Proceed will be given after the Contract has been executed and the contract bond and evidence of insurance have been approved and filed by the Contracting Agency. The Contractor shall not commence with the Work until the Notice to Proceed has been given by the Engineer. The Contractor shall commence construction activities on the project site within ten days of the Notice to Proceed Date, unless otherwise approved in writing. The

Contractor shall diligently pursue the Work to the Physical Completion Date within the time specified in the Contract. Voluntary shutdown or slowing of operations by the Contractor shall not relieve the Contractor of the responsibility to complete the Work within the time(s) specified in the Contract.

When shown in the Plans, the first order of Work shall be the installation of high visibility fencing to delineate all areas for protection or restoration, as described in the Contract. Installation of high visibility fencing adjacent to the roadway shall occur after the placement of all necessary signs and traffic control devices in accordance with 2-04.3. Upon construction of the fencing, the Contractor shall request the Engineer to inspect the fence. No other Work shall be performed on the site until the Contracting Agency has accepted the installation of high visibility fencing, as described in the Contract.

Add the following new section:

1-08.4(1) Suggested Construction Sequence ***(New Section)***

(March 2, 2026 MLT GSP)

Prior to commencing work, the Contractor shall submit for approval of the Engineer a project schedule that contains a detailed construction sequence consistent with the following. The Contractor shall follow all steps of the construction sequence in accordance with the plans and specifications. Construction shall not begin until the project schedule is approved.

1. **Water Main on 226th Place SW / 68th Place W / 228th Street SW, see Drawing Nos. C-1 through C-5.**

    a. Set up temporary vehicular and pedestrian detours.
    b. Cut and temporarily cap the existing water mains at the following locations (near the existing PRV station / assembly) for temporary operation of the water system during construction. Plug existing pipes as needed with commercial concrete to abandon them in place. See Section 7-09.3(26) for additional information.
        I. To the north of the PRV station.
        II. To the west of the PRV station.
        III. To the northwest of the PRV station.
    c. Remove existing PRV station.
    d. Install proposed 12 Inch Diam. Class 52 ductile iron water mains, service connections from proposed water main to proposed water meter, fire hydrants, gate valves, combination air Release/air vacuum valves, and pressure reducing valve (PRV) assembly / station.
    e. After water sample testing meets DOH requirements and is approved by the Engineer, cut-in and connect new water main to existing main at the following locations.

I. 226th Place SW and 70th Avenue W intersection (494 Pressure Zone).
II. 226th Place SW and 68th Place W intersection (494 Pressure Zone).
III. PRV Station (494 Pressure Zone).
IV. 228th Street SW and 66th Avenue W intersection (570 Pressure Zone).

f. Adjust settings for the proposed PRVs to match the existing PRVs.
g. Coordinate with Project Engineer and Public Works Supervisor for City personnel to close the gate valves on existing water mains. The existing gate valves shall be closed prior to cutting existing water mains.
h. Transfer water service connection from the existing water mains / meters to the proposed water mains / meters.
i. Cut and cap the existing water mains at the following locations. Plug existing pipes as needed with commercial concrete to abandon them in place.
    I. 226th Place SW and 70th Avenue W intersection.
    II. 228th Street SW and 66th Avenue W intersection, 8 Inch Diam. CI on south side.
    III. 228th Street SW and 66th Avenue W intersection, 6 Inch Diam. CI on north side.
j. Install traffic curb and gutters, curb ramps, and sidewalks.
    I. Only one quadrant at an intersection may have curb ramp(s) worked on at a time, see Plans for additional information.
k. Install HMA pavement repair in utility trench areas.
l. Mill existing asphalt pavement.
m. Lower utility frames and grates below the existing grade.
n. Remove existing asphalt pavement (including existing subgrade), and install HMA pavement repairs (including subgrade) per plans and specifications and as directed by the Project Engineer.
o. Install pavement repair membrane and overlay pave with HMA.
p. Adjust utility frames and grates to finished grade.
q. Install channelization.
r. Restore the project site.
s. Take down and remove temporary vehicular and pedestrian detours.

1-08.5 Time for Completion

(February 17, 2026 APWA GSP, Option B)

Revise the third and fourth paragraphs to read:

Contract time shall begin on the first working day following the tenth (10th) calendar day after the Notice to Proceed date. If the Contractor starts Work on the project at an earlier date, then contract time shall begin on the first working day when onsite work begins.

Each working day shall be charged to the Contract as it occurs, until the Contract Work is physically complete. If substantial completion has been granted and all the authorized working days have been used, charging of working days will cease. Each week the Engineer will provide the Contractor a statement that shows the number of working days: (1) charged to the Contract the week before; (2) specified for the physical completion of the Contract; and (3) remaining for the physical completion of the Contract. The statement will also show the nonworking days and all partial or whole days the Engineer declares as unworkable. The statement will be identified as a Written Determination by the Engineer. If the Contractor does not agree with the Written Determination of working days, the Contractor shall pursue the protest procedures in accordance with Section 1-04.5. By failing to follow the procedures of Section 1-04.5, the Contractor shall be deemed as having accepted the statement as correct. If the Contractor is approved to work 10 hours a day and 4 days a week (a 4-10 schedule) and the fifth day of the week in which a 4-10 shift is worked would ordinarily be charged as a working day, then the fifth day of that week will be charged as a working day whether or not the Contractor works on that day.

Revise the sixth paragraph to read:

The Engineer will give the Contractor written notice of the Completion Date of the Contract after all the Contractor's obligations under the Contract have been performed by the Contractor. The following events must occur before the Completion Date can be established:

1. The physical Work on the project must be complete; and
2. The Contractor must furnish all documentation required by the contract and required by law, to allow the Contracting Agency to process final acceptance of the contract. The following documents must be received by the Engineer prior to establishing a completion date:
    a. Certified Payrolls (per Section 1-07.9(5)).
    b. Material Acceptance Certification Documents
    c. Monthly Reports in DMCS of the amounts paid including the final payment confirmation to all firms required by Section 1-08.1(7)A if applicable
    d. Final Contract Voucher Certification
    e. Copies of the approved "Affidavit of Prevailing Wages Paid" for the Contractor and all subcontractors
    f. A copy of the Notice of Termination sent to the Washington State Department of Ecology (Ecology); the elapse of 30 calendar days from the date of receipt

of the Notice of Termination by Ecology; and no rejection of the Notice of Termination by Ecology. This requirement will not apply if the Construction Stormwater General Permit is transferred back to the Contracting Agency in accordance with Section 8-01.3(16).

g. Property owner releases per Section 1-07.24

1-08.6 Suspension of Work

(February 6, 2023 WSDOT GSP, Option 2)

Section 1-08.6 is supplemented with the following:

Contract time may be suspended for procurement of critical materials (Procurement Suspension). In order to receive a Procurement Suspension, the Contractor shall within 21 calendar days after execution by the Contracting Agency, place purchase orders for all materials deemed critical by the Contracting Agency for physical completion of the contract. The Contractor shall provide copies of purchase orders for the critical materials. Such purchase orders shall disclose the purchase order date and estimated delivery dates for such critical material.

The Contractor shall show procurement of the materials listed below as activities in the Progress Schedule. If the approved Progress Schedule indicates that the materials procurement are critical activities, and if the Contractor has provided documentation that purchase orders are placed for the critical materials within the prescribed 21 calendar days, then contract time will be suspended upon physical completion of all critical work except that work dependent upon the below listed critical materials:

- Pressure reducing valve (PRV)
- PRV vault

Charging of contract time will resume upon delivery of the critical materials to the Contractor or 60 calendar days after execution by the Contracting Agency, whichever occurs first.

1-08.9 Liquidated Damages

(February 17, 2026 APWA GSP, Option B)

Revise the second and third paragraphs to read:

Accordingly, the Contractor agrees:

1. To pay (according to the following formula) liquidated damages for each working day beyond the number of working days established for Physical Completion, and

2. To authorize the Engineer to deduct these liquidated damages from any money due or coming due to the Contractor.

Liquidated Damages Formula

LD=0.15C/T

Where:

LD = liquidated damages per working day (rounded to the nearest dollar)
C = original Contract amount
T = original time for Physical Completion

When the Contract Work has progressed to Substantial Completion as defined in the Contract, the Engineer may determine the Contract Work is Substantially Complete. The Engineer will notify the Contractor in writing of the Substantial Completion Date. For overruns in Contract time occurring after the date so established, the formula for liquidated damages shown above will not apply. For overruns in Contract time occurring after the Substantial Completion Date, liquidated damages shall be assessed on the basis of direct engineering and related costs assignable to the project until the actual Physical Completion Date of all the Contract Work. The Contractor shall complete the remaining Work as promptly as possible. Upon request by the Engineer, the Contractor shall furnish a written schedule for completing the physical Work on the Contract.

1-08.10 Termination of Contract

Add the following new section:

1-08.10(6) Removal of Equipment ***(New Section)***

(October 16, 2023 MLT GSP)

In case of the termination of this Contract before completion for any cause, Contractor, if notified to do so by Owner, shall promptly remove any part of or all of their equipment and supplies from the property of Owner; and, if Contractor fails to do so within 5 working days from such notice by Owner, Owner will have the right to remove such equipment and supplies at the expense of Contractor, deducting the cost thereof from any funds otherwise due Contractor.

1-09 MEASUREMENT AND PAYMENT

1-09.2 Weighing Equipment

1-09.2(1) General Requirements for Weighing Equipment

(November 25, 2024 APWA GSP, Option B)

Revise item 4 of the fifth paragraph to read:

4. Test results and scale weight records for each day's hauling operations are provided to the Engineer daily. Reporting shall utilize WSDOT form 422-027LP, Scaleman's Daily

Report, unless the printed ticket contains the same information that is on the Scaleman's Daily Report Form. The scale operator must provide AM and/or PM tare weights for each truck on the printed ticket.

1-09.2(1) General Requirements for Weighing Equipment

(July 8, 2024 APWA GSP, Option C and October 15, 2025 MLT GSP as underlined)

Revise the sixth and seventh paragraph to read:

Trucks and Tickets – Each truck to be weighed shall bear a unique identification number. This number shall be legible and in plain view of the scale operator. The Contractor shall provide Electronic tickets or Physical tickets for all weighed materials. All Tickets shall, regardless of medium, at a minimum, contain the following information:

1. Date of haul;
2. Contract number,
3. Contract unit Bid item;
4. Unit of measure;
5. Identification number of hauling vehicle; and
6. Weight delivered:
    a. Net weight in the case of batch and hopper scales.
    b. Gross weight, tare (a.m. and p.m. minimum) and net weight in the case of platform scales (tare may be omitted if a tare beam is used).
    c. Approximate load out weight in the case of belt conveyor scales.
7. <u>Project Name</u>

Electronic-tickets shall be uploaded to the designated site so that they can be accessed by the material receiver at the material delivery point. Physical tickets shall be handed to the inspector at the delivery point at the time materials are delivered. The material delivery point is defined as the location where the material is incorporated into the permanent Work. The Contractor's representative shall make report summaries available to the Engineer's designated receiver, not later than the end of shift, for reconciliation. Tickets for loads not verified as delivered will receive no pay.

1-09.2(5) Measurement

(December 30, 2022 APWA GSP)

Revise the first paragraph to read:

Scale Verification Checks – At the Engineer's discretion, the Engineer may perform verification checks on the accuracy of each batch, hopper, or platform scale used in weighing contract items of Work.

1-09.6 Force Account

(December 30, 2022 APWA GSP)

Supplement this section with the following:

The Contracting Agency has estimated and included in the Proposal, dollar amounts for all

items to be paid per force account, only to provide a common proposal for Bidders. All such dollar amounts are to become a part of Contractor's total bid. However, the Contracting Agency does not warrant expressly or by implication, that the actual amount of work will correspond with those estimates. Payment will be made on the basis of the amount of work actually authorized by the Engineer.

1-09.7 Mobilization

(December 30, 2022 APWA GSP)

Delete this Section and replace it with the following:

Mobilization consists of preconstruction expenses and the costs of preparatory Work and operations performed by the Contractor typically occurring before 10 percent of the total original amount of an individual Bid Schedule is earned from other Contract items on that Bid Schedule. Items which are not to be included in the item of Mobilization include but are not limited to:

1. Portions of the Work covered by the specific Contract item or incidental Work which is to be included in a Contract item or items.
2. Profit, interest on borrowed money, overhead, or management costs.
3. Costs incurred for mobilizing equipment for force account Work.

Based on the lump sum Contract price for "Mobilization", partial payments will be made as follows:

1. When 5 percent of the total original Bid Schedule amount is earned from other Contract items on that original Bid Schedule, excluding amounts paid for materials on hand, 50 percent of the Bid Item for mobilization on that original Bid Schedule, 5 percent of the total of that original Bid Schedule, or 5 percent of the total original Contract amount, whichever is the least, will be paid.
2. When 10 percent of the total original Bid Schedule amount is earned from other Contract items on that original Bid Schedule, excluding amounts paid for materials on hand, 100 percent of the Bid Item for mobilization on that original Bid Schedule, 10 percent of the total of that original Bid Schedule, or 10 percent of the total original Contract amount, whichever is the least, will be paid.
3. When the Substantial Completion Date has been established for the project, payment of any remaining amount Bid for mobilization will be paid.

Nothing herein shall be construed to limit or preclude partial payments otherwise provided by the Contract

1-09.9 Payments

(July 8, 2024 APWA GSP, Option A)

Supplement this section with the following:

Lump sum item breakdowns are not required when the bid price for the lump sum item is less than $20,000.

1-09.9 Payments

(February 17, 2026 APWA GSP, Option B)

Delete the fourth paragraph and replace it with the following:

Progress payments for completed Work and material on hand will be based upon progress estimates prepared by the Engineer. A progress estimate cutoff date will be established at the preconstruction conference.

The initial progress estimate will be made not later than 30 days after the Contractor commences the Work, and successive progress estimates will be made every month thereafter until the Completion Date. Progress estimates made during progress of the Work are tentative, and made only for the purpose of determining progress payment. The progress estimates are subject to change at any time prior to the calculation of the Final Payment.

The value of the progress estimate will be the sum of the following:

1. Unit Price Items in the Bid Form — the approximate quantity of acceptable units of Work completed multiplied by the unit price.
2. Lump Sum Items in the Bid Form — based on the approved Contractor's lump sum breakdown for that item, or absent such a breakdown, based on the Engineer's determination.
3. Materials on Hand — 100 percent of invoiced cost of material delivered to Job site or other storage area approved by the Engineer.
4. Change Orders — entitlement for approved extra cost or completed extra Work as determined by the Engineer.

Progress payments will be made in accordance with the progress estimate less:

1. Retainage per Section 1-09.9(1), on non FHWA-funded projects;
2. The amount of Progress Payments previously made; and
3. Funds withheld by the Contracting Agency for disbursement in accordance with the Contract Documents.

Progress payments for Work performed shall not be evidence of acceptable performance or an admission by the Contracting Agency that any Work has been satisfactorily completed. The determination of payments under the Contract will be final in accordance with Section 1-05.1.

The sixth paragraph of Section 1-09.9 is deleted.

1-09.11 Disputes and Claims

1-09.11(3) Time Limitation and Jurisdiction

(December 30, 2022 APWA GSP)

Revise this section to read:

For the convenience of the parties to the Contract it is mutually agreed by the parties that all claims or causes of action which the Contractor has against the Contracting Agency arising from the Contract shall be brought within 180 calendar days from the date of final acceptance (Section 1-05.12) of the Contract by the Contracting Agency; and it is further agreed that all such claims or causes of action shall be brought only in the Superior Court of the county where the Contracting Agency headquarters is located, provided that where an action is asserted against a county, RCW 36.01.050 shall control venue and jurisdiction. The parties understand and agree that the Contractor's failure to bring suit within the time period provided, shall be a complete bar to all such claims or causes of action. It is further mutually agreed by the parties that when claims or causes of action which the Contractor asserts against the Contracting Agency arising from the Contract are filed with the Contracting Agency or initiated in court, the Contractor shall permit the Contracting Agency to have timely access to all records deemed necessary by the Contracting Agency to assist in evaluating the claims or action.

1-09.13 Claims Resolution

1-09.13(3) Arbitration

1-09.13(3)A Arbitration General

(January 19, 2022 APWA GSP)

Revise the third paragraph to read:

The Contracting Agency and the Contractor mutually agree to be bound by the decision of the arbitrator, and judgment upon the award rendered by the arbitrator may be entered in the Superior Court of the county in which the Contracting Agency's headquarters is located, provided that where claims subject to arbitration are asserted against a county, RCW 36.01.050 shall control venue and jurisdiction of the Superior Court. The decision of the arbitrator and the specific basis for the decision shall be in writing. The arbitrator shall use the Contract as a basis for decisions.

1-09.13(4) Venue for Litigation

(December 30, 2022 APWA GSP)

Revise this section to read:

Litigation shall be brought in the Superior Court of the county in which the Contracting Agency's headquarters is located, provided that where claims are asserted against a county, RCW 36.01.050 shall control venue and jurisdiction of the Superior Court. It is mutually agreed by the parties that when litigation occurs, the Contractor shall permit the Contracting Agency to have timely access to all records deemed necessary by the Contracting Agency to assist in evaluating the claims or action.

1-10 TEMPORARY TRAFFIC CONTROL

1-10.2 Traffic Control Management

1-10.2(1) General

(October 3, 2022 WSDOT GSP, Option 1)
Section 1-10.2(1) is supplemented with the following:

The Traffic Control Supervisor shall be certified by one of the following:

The Northwest Laborers-Employers Training Trust
27055 Ohio Ave.
Kingston, WA 98346
(360) 297-3035
https://www.nwlett.edu

Evergreen Safety Council
12545 135th Ave. NE
Kirkland, WA 98034-8709
1-800-521-0778
https://www.esc.org

The American Traffic Safety Services Association
15 Riverside Parkway, Suite 100
Fredericksburg, Virginia 22406-1022
Training Dept. Toll Free (877) 642-4637
Phone: (540) 368-1701
https://atssa.com/training

Integrity Safety
13912 NE 20th Ave.
Vancouver, WA 98686
(360) 574-6071
https://www.integritysafety.com

US Safety Alliance
(904) 705-5660
https://www.ussafetyalliance.com

K&D Services Inc.
2719 Rockefeller Ave.
Everett, WA 98201
(800) 343-4049
https://www.kndservices.net

1-10.2(1)A Traffic Control Management

(May 14, 2020 MLT GSP)
Section 1-10.2(1)A is supplemented with the following:

The Contractor's attention is directed to the school bus traffic within the limits of the project. 226th Place SW / 68th Place W / 228th Street SW and 66th Avenue W are school bus routes. The Contractor shall coordinate their activities with the Edmonds School District Transportation Division. Contact "Edmonds Bus Barn Dispatch" at (425) 431-1405.

The Contractor is also advised that 66th Avenue W within the project area are the routes for Community Transit bus services. The Contractor shall coordinate their activities by emailing construction.supervisor@commtrans.org.

1-10.3(1) Traffic Control Labor

1-10.3(1)B Other Traffic Control Labor

(February 6, 2026 MLT GSP)

Section 1-10.3(1)B is supplemented with the following:

The Contractor shall arrange for uniformed law enforcement personnel to participate in the Contractor's traffic control activities when more than one leg of an intersection requires traffic control. As stated in the last paragraph of Section 1-10.1(2), the responsibility for all traffic control shall remain with the Contractor. Uniformed law enforcement personnel shall be utilized to perform the following traffic control tasks unless approved otherwise by the Engineer and based upon an approved traffic control plan:

- As directed by the Engineer through review and approval of contractor proposed Traffic Control Plans

City of Mountlake Terrace Police Department, (425) 670-8260, may be able to provide law enforcement personnel for traffic control activities. The City of Mountlake Terrace Police Department shall have first right of refusal for traffic control services before the contractor arranges with other law enforcement agencies to provide these services.

END OF DIVISION 1

DIVISION 2 – EARTHWORK

2-01 CLEARING, GRUBBING, AND ROADSIDE CLEANUP

2-01.2 Disposal of Usable Material and Debris

(October 24, 2023 MLT GSP)

The second paragraph of Section 2-01.2 is replaced with the following:

The Contractor shall dispose of all debris by Disposal Method No. 2 - Waste Site.

2-01.3 Construction Requirements

2-01.3(1) Clearing

(March 2, 2026 MLT GSP)

Supplement this section with the following:

8. Remove shrubs, blackberry bushes, and landscaping within 3 feet from the edge of utility trenches, excavation areas for improvements (including but not limited to locations where the existing water main is cut and capped), water meter boxes, and hydrants (including trimming, cutting, and removing tree branches up to 7 feet high in the City Right-of-Way).

2-01.5 Payment

(July 5, 2023 MLT GSP)

Modify section 2-01.5 with the following:

"Roadside Cleanup" within the project limits shall be considered incidental to other bid items of work and no extra payment shall be made. The work shall include sweepings and maintaining during construction phase.

2-02 REMOVAL OF STRUCTURES AND OBSTRUCTIONS

2-02.1 Description

(October 24, 2023 MLT GSP)

Section 2-02.1 is supplemented with the following:

The following partial list of items to be removed and disposed of under the bid item "Removal of Structures and Obstructions" is provided for the convenience of the Contractor. The Contractor shall review the Contract Documents and project site to verify other items to be removed:

Item	Location	Quantity (Schedules "A", "B", and "C")
Remove / Abandon Existing Water Pipe	See Plans	Approximately 2,350 LF (Schedule "A")
Plugging Existing Water Pipe with Commercial Concrete	See Plans	As Necessary to Install Proposed Improvements (Schedule "A")
Remove Existing Combination Air Release/Air Vacuum Valve Assembly	See Plans	Approximately 1 EA (Schedule "A")
Remove Existing Gate Valve	See Plans	Approximately 11 EA (Schedule "A")
Remove Existing Signs and Barricades	See Plans	Approximately 2 EA (Schedules "A" and "B")
Remove, Trim, and Cut Shrubs, Blackberry Bushes, Landscaping, and Tree Branches	See Plans	As Necessary to Install Proposed Improvements (Schedules "A" and "B")
Removal Existing Painted and Plastic Pavement Markings	See Plans	As Necessary to Install Proposed Improvements (Schedules "A" and "B")

2-02.3 Construction Requirements

(July 5, 2023 MLT GSP)

Section 2-02.3 is supplemented with the following:

The Contractor shall coordinate with the Engineer the proposed location of all features to be relocated or realigned and mark the location in the field.

The Contractor shall coordinate with the utility organizations for abandonment, relocation, and/or adjustment as needed.

Voids left by removal of all items shall be backfilled with suitable native material or gravel borrow as approved by the Engineer. Gravel Borrow shall meet the requirements of Section 9-03.14 of the Standard Specifications and shall be compacted to 95 percent of maximum dry density per Section 2-03.3(14)D. No payment shall be made for backfill with suitable native material. No additional payment shall be made for backfill with Gravel Borrow if suitable native material is available as determined by the Engineer.

2-02.3(3) Removal of Pavement, Sidewalks and Curbs

(August 15, 2025 MLT GSP)

Supplement this section with the following:

The existing asphalt concrete pavement in the project area is approximately 3 to 5 inches thick on local roads, except on 228th Street SW where it is approximately 5 to 8 inches thick.

Add the following new section:

2-02.3(5) Remove / Abandon Existing Utility Pipe ***(New Section)***

(October 30, 2017 MLT GSP)

The Contractor shall remove or abandon existing storm sewer, sanitary sewer and water line pipe as identified on the Plans and backfill the voids.

Existing utility pipe may be abandoned in place unless it conflicts with proposed improvements. Pipes to be abandoned shall be plugged in accordance with Section 7-08.3(4) of these Specifications.

Structure excavation and backfill limits for the removal of utility pipe are not shown in the Plans. This excavation, removal, abandonment, and backfill work shall be considered incidental to the items under Remove Structures and Obstructions.

2-02.4 Measurement

(July 5, 2023 MLT GSP)

Section 2-02.4 is supplemented with the following:

No specific unit of measurement shall apply to "Removal of Structures and Obstructions" which will be measured and paid per lump sum.

"Remove and Dispose of Existing Cement Concrete Curb and Gutter" shall be measured and paid by linear foot.

"Remove and Dispose of Existing Cement Concrete Sidewalk" shall be measured and paid by square yard.

No measurement shall be made for sawcutting which shall be considered incidental to the various bid items of the contract and no addition payment shall be made.

2-02.5 Payment

(July 5, 2023 MLT GSP)

Section 2-02.5 is supplemented with the following:

"Removal of Structures and Obstructions", per lump sum.

The lump sum contract price for "Removal of Structures and Obstructions" will be full compensation for all labor, tools, equipment, materials, excavation, backfill, compaction, hauling, waste fee and all other incidental items necessary to complete the work and shown on the Plans and as described in the Standard Specifications and Herein.

Backfill for voids created by the removal of structures and obstructions shall be approved native materials. Separate payment for "Gravel Borrow Incl. Haul" will only be made if, in the sole opinion of the Engineer, native excavated material is not suitable for backfill of

voids. No additional payment shall be made under Roadway Excavation or Structure Excavation for the items included in Section 2-02 herein.

"Remove and Dispose of Existing Concrete Traffic Curb and Gutter", per linear foot.

"Remove and Dispose of Existing Cement Concrete Curb and Gutter", per linear foot will be full compensation for all labor, equipment, excavation, removal, hauling waste fee and all other incidental items necessary to complete the work as shown on the plans and described in the specifications.

"Remove and Dispose of Existing Concrete Sidewalk", per square yard.

"Remove and Dispose of Existing Cement Concrete Sidewalk", per square yard will be full compensation for all labor, equipment, excavation, removal, hauling waste fee and all other incidental items necessary to complete the work as shown on the plans and described in the specifications.

No payment shall be made for removal of "Commercial HMA or Asphalt Treated Base for Temporary Patch" installed for this project, which shall be considered incidental to the various bid items of the contract, regardless of how much temporary patch is installed.

No payment shall be made for sawcutting, which shall be considered incidental to the various bid items of the contract, regardless of required sawcutting depth.

2-03 ROADWAY EXCAVATION AND EMBANKMENT

2-03.5 Payment

(October 15, 2025 MLT GSP)

Section 2-03.5 is supplemented with the following:

The replacement for unsuitable materials shall be Permeable Ballast and paid under Section 4-04.5 "Permeable Ballast Incl. Haul for Road".

END OF DIVISION 2

DIVISION 4 – BASES

4-04 BALLAST AND CRUSHED SURFACING

4-04.4 Measurement

(April 11, 2025 MLT GSP)

Section 4-04.4 is supplemented with the following:

"Crushed Surfacing Top Course Incl. Haul" shall be measured per ton.
"Permeable Ballast Incl. Haul for Road" shall be measured per ton.

4-04.5 Payment

(April 10, 2025 MLT GSP)

Section 4-04.5 is supplemented with the following:

"Crushed Surfacing Top Course Incl. Haul", per ton.

The unit price per ton for installing "Crushed Surfacing Top Course Incl. Haul" shall include all costs for the labor, materials, tools, and equipment to complete the work, including furnishing placing, and compacting the material on the subgrade for cement concrete curb and gutters, sidewalks, driveways, roadway and other paving, to create temporary ramps for driveway and pedestrian routes, and for backfill in trenches where directed by the Engineer. The work also includes hauling and disposing of the unsuitable material displaced by the furnished crushed surfacing top course, if not included in other bid items, and removing temporary ramps.

"Permeable Ballast Incl. Haul for Road", per ton.

The unit price per ton for installing "Permeable Ballast Incl. Haul for Road" shall include all costs for the labor, materials, and equipment to complete the work, including furnishing placing, and compacting, hauling, dispose surplus and waste fee.

4-06 ASPHALT TREATED BASE (ATB)

(December 12, 2025 APWA GSP)

Supplement Division 4 with the following:

4-06.1 Description

Asphalt treated base (ATB) consists of a compacted course of base material which has been weatherproofed and stabilized by treatment with an asphalt binder.

The Work shall consist of one or more courses of asphalt treated base placed on the Subgrade in accordance with these Specifications and in conformity with the lines, grades, thicknesses, and typical cross-sections shown in the Plans or as staked.

4-06.2 Materials

Materials shall meet the requirements of the following sections:

Asphalt	9-02.1
Anti-Stripping Additive	9-02.4
Aggregates	9-03.6

The grade of paving asphalt shall be as required in the Contract.

4-06.3 Construction Requirements

4-06.3(1) Asphalt Mixing Plant

Asphalt mixing plants for asphalt treated base shall meet the following requirements:

Heating

The plant shall be capable of heating the aggregates to the required temperature.

Proportioning

The mixing plant shall be capable of proportioning: the aggregates to meet the Specifications, and the asphalt binder will be introduced at the rate specified in the approved mix design. If the aggregates are supplied in two or more sizes, means shall be provided for proportioning or blending the different sizes of aggregates to produce material meeting the Specification requirements.

Recycled asphalt pavement (RAP) may be used in the production of ATB. If utilized, the amount of RAP shall not exceed 30 percent of the total weight of the ATB. The final gradation and asphalt binder content will conform to the approved Job Mix Formula (JMF).

ATB will be evaluated under Commercial Evaluation as shown in Section 5-04.2(2). Va limits under 9-03.8(7) are excluded from ATB evaluation criteria.

Mixing

The mixer shall be capable of producing a uniform mixture of uniformly coated aggregates meeting the requirements of these Specifications.

4-06.3(2) Preparation of Aggregates

Aggregates for asphalt treated base shall be stockpiled before use in accordance with the requirements of Section 3-02.

The aggregates shall be heated as required by the Engineer.

4-06.3(2)A Mix Design

The mix design requirements for asphalt treated base shall be as described in Section 9-03.6(3). Ndesign will be 100 gyrations for all ATB design applications. The asphalt binder shall be PG58H-22 or PG64H-28 unless specifically altered in the project specifications. The proposed mix design will be submitted for review on WSDOT Form 350-042 with

included notes applicable to the ATB design evaluation.

4-06.3(3) Vacant

4-06.3(4) Mixing

The asphalt treated base shall be mixed in accordance with the requirements of Section 5-04.3(6).

4-06.3(5) Hauling Equipment

Hauling equipment for asphalt treated base shall conform to the requirements of Section 5-04.3(3)B.

4-06.3(6) Spreading and Finishing

Asphalt treated base shall be spread with a spreading machine equipped with a stationary, vibratory, or oscillating screed or cut-off device, subject to the approval of the Engineer. Approval of the equipment shall be based on a job demonstration that the finished product will meet all requirements of the Specifications. Automatic controls will not be required. Unless otherwise directed by the Engineer, the nominal compacted depth of any ATB layer shall not exceed 0.40 feet. On areas where irregularities or unavoidable obstacles make the use of mechanical spreading and finishing equipment impractical, the paving may be done with other equipment or by hand.

The internal temperature of the ATB mixture at the time compaction is achieved shall be a minimum of 185°F. Rollers shall only be operated in the static mode when the internal temperature of the mix is less than 175°F.

4-06.3(6)A Subgrade Protection Course

Unless otherwise specified by the Engineer, the Contractor shall place the asphalt treated base as a protection for the prepared Subgrade on all sections of individual Roadways which are to receive asphalt treated base as soon as 10,000 square yards of Subgrade is completed. This requirement shall not be limited to contiguous areas on the project.

The surface of the Subgrade protection layer when constructed on a grading project shall conform to grade and smoothness requirements that apply to the Subgrade upon which it is placed.

4-06.3(6)B Finish Course

The final surface course of the asphalt treated base, excluding Shoulders, shall not deviate at any point more than ⅜ inch from the bottom of a 10-foot straightedge laid in any direction on the surface on either side of the Roadway crown. Failure to meet this requirement shall necessitate sufficient surface correction to achieve the required tolerance, as approved by the Engineer, at no expense to the Contracting Agency.

When portland cement concrete pavement is placed on an asphalt base, the surface tolerance of the asphalt base shall be such that no elevation lies more than 0.05 feet below nor 0.00 feet above the plan grade minus the specified plan depth of portland cement

concrete pavement. Prior to placing the portland cement concrete pavement, any such irregularities shall be brought to the required tolerance by grinding or other means approved by the Engineer, at no expense to the Contracting Agency.

4-06.3(7) Density

The asphalt treated base shall be compacted to a density of not less than 80% percent of the maximum theoretical density established for the mix by WSDOT FOP for AASHTO T 209. The density of the base shall be determined by means of tests on cores taken from the Roadway or with the nuclear gauge in accordance with Section 5-04.3(10). The frequency of these tests shall be at the discretion of the Engineer, but in no case shall it be less than one control lot for each normal day's production. The use of equipment which results in damage to the materials or produces substandard workmanship will not be permitted.

4-06.3(8) Anti-Stripping Additive

An anti-stripping additive shall be added to the asphalt binder material in accordance with Section 9-02.4 in the amount designated in a WSDOT mix design/anti-strip evaluation report for a dense graded hot mix asphalt design from the same gravel source within the last 24 months or as evaluated separately by an accredited lab using current WSDOT test methods (AASHTO T324 – Hamburg). Alternately, the ATB may be evaluated for anti-strip additive using ASTM D3625 (Standard Practice for Effect of Water on Bituminous-Coated Aggregate Using Boiling Water) by an accredited lab. The anti-stripping additive required will be the minimum amount necessary to achieve a passing evaluation.

END OF DIVISION 4

DIVISION 5 – SURFACE TREATMENTS AND PAVEMENTS

5-04 HOT MIX ASPHALT

(December 12, 2025 APWA GSP)

Delete Section 5-04 and replace it with the following:

5-04.1 Description

(December 12, 2025 APWA GSP)

This Work shall consist of providing and placing one or more layers of plant-mixed hot mix asphalt (HMA) on a prepared foundation or base in accordance with these Specifications and the lines, grades, thicknesses, and typical cross-sections shown in the Plans. The manufacture of HMA may include warm mix asphalt (WMA) processes in accordance with these Specifications. WMA processes include organic additives, chemical additives, and foaming.

HMA shall be composed of asphalt binder and mineral materials as may be required, mixed in the proportions specified to provide a homogeneous, stable, and workable mixture.

5-04.2 Materials

(December 12, 2025 APWA GSP)

Materials shall meet the requirements of the following sections:

Asphalt Binder	9-02.1(4)
Cationic Emulsified Asphalt	9-02.1(6)
Anti-Stripping Additive	9-02.4
HMA Additive	9-02.5
Aggregates	9-03.8
Recycled Asphalt Pavement (RAP)	9-03.8(3)B, 9-03.21
Reclaimed Asphalt Shingles (RAS)	9-03.8(3)B, 9-03.21
Mineral Filler	9-03.8(5)
Recycled Material	9-03.21

The Contract documents may establish that the various mineral materials required for the manufacture of HMA will be furnished in whole or in part by the Contracting Agency. If the documents do not establish the furnishing of any of these mineral materials by the Contracting Agency, the Contractor shall be required to furnish such materials in the amounts required for the designated mix. Mineral materials include coarse and fine aggregates, and mineral filler.

The Contractor may choose to utilize recycled asphalt pavement (RAP) in the production of HMA. The RAP may be from pavements removed under the Contract, if any, or

pavement material from an existing stockpile.

The Contractor may use up to 20 percent RAP by total weight of HMA with no additional sampling or testing of the RAP.

If the Contractor wishes to utilize High RAP/Any RAS, the design must be listed on the WSDOT Qualified Products List (QPL).

The grade of asphalt binder shall be as required by the Contract. Blending of asphalt binder from different sources is not permitted.

The Contractor may only use warm mix asphalt (WMA) processes in the production of HMA with 20 percent or less RAP by total weight of HMA. The Contractor shall submit to the Engineer for approval the process that is proposed and how it will be used in the manufacture of HMA.

Production of aggregates shall comply with the requirements of Section 3-01.
Preparation of stockpile site, the stockpiling of aggregates, and the removal of aggregates from stockpiles shall comply with the requirements of Section 3-02.

5-04.2(1) How to Get an HMA Mix Design on the QPL

If the Contractor wishes to submit a mix design for inclusion in the Qualified Products List (QPL), please follow the WSDOT process outlined in Standard Specification 5-04.2(1).

5-04.2(1)A Vacant

5-04.2(2) Mix Design - Obtaining Project Approval

No paving shall begin prior to the approval of the mix design by the Engineer.

Nonstatistical evaluation will be used for all HMA not designated as Commercial HMA in the Contract documents.

Commercial evaluation will be used for Commercial HMA and for other classes of HMA in the following applications: sidewalks, road approaches, ditches, slopes, paths, trails, gores, prelevel, temporary pavement, and pavement repair. Other nonstructural applications of HMA accepted by commercial evaluation shall be as approved by the Project Engineer. Sampling and testing of HMA accepted by commercial evaluation will be at the option of the Project Engineer. The Proposal quantity of HMA that is accepted by commercial evaluation will be excluded from the quantities used in the determination of nonstatistical evaluation.

Nonstatistical Mix Design. Fifteen days prior to the first day of paving the Contractor shall provide one of the following mix design verification certifications for Contracting

Agency review;

- The WSDOT Mix Design Evaluation Report from the current WSDOT QPL, or one of the mix design verification certifications listed below.
- The proposed HMA mix design on WSDOT Form 350-042 with the seal and certification (stamp & signature) of a valid licensed Washington State Professional Engineer. * (see below)
- The Mix Design Report for the proposed HMA mix design developed by a qualified City or County laboratory that is within one year of the approval date. * (see below)

The mix design shall be performed by a lab accredited by a national authority such as Laboratory Accreditation Bureau, L-A-B for Construction Materials Testing, The Construction Materials Engineering Council (CMEC's) ISO 17025 or AASHTO Accreditation Program (AAP) and shall supply evidence of participation in the AASHTO: resource proficiency sample program.

Mix designs for HMA accepted by Nonstatistical evaluation shall:

- Be designed for 2.8 million equivalent single axle loads (ESALs).
- Have the aggregate structure and asphalt binder content determined in accordance with WSDOT Standard Operating Procedure 732 and meet the requirements of Sections 9-03.8(2), except that Hamburg testing for ruts and stripping are at the discretion of the Engineer, and 9-03.8(6).
- Have anti-strip requirements, if required, for the proposed mix design determined in accordance with AASHTO T 283 or T 324 or based on historic anti-strip and aggregate source compatibility from previous WSDOT lab testing.

* At the discretion of the Engineer, agencies may accept verified mix designs older than 12 months from the original verification date with a certification from the Contractor that the materials and sources are the same as those shown on the original mix design.

Commercial Evaluation Mix Design. Approval of a mix design for "Commercial Evaluation" will be based on a review of the Contractor's submittal of WSDOT Form 350-042 (for commercial mixes, AASHTO T 324 evaluation is not required) or a Mix Design from the current WSDOT QPL or from one of the processes allowed by this section. Testing of the HMA by the Contracting Agency for mix design approval is not required.

For the Bid Item Commercial HMA, the Contractor shall select a class of HMA and design level of ESALs appropriate for the required use.

5-04.2(2)B Using Warm Mix Asphalt Processes

The Contractor may elect to use additives that reduce the optimum mixing temperature or serve as a compaction aid for producing HMA. Additives include organic additives,

chemical additives and foaming processes. The use of Additives is subject to the following:

- Do not use additives that reduce the mixing temperature more than allowed in Section 5-04.3(6) in the production of mixtures.
- Before using additives, obtain the Engineer's approval using WSDOT Form 350-076 to describe the proposed additive and process.

5-04.3 Construction Requirements
(December 12, 2025 APWA GSP)

5-04.3(1) Weather Limitations
(December 12, 2025 APWA GSP)

Do not place HMA for wearing course on any Traveled Way beginning October 1st through March 31st of the following year without written concurrence from the Engineer.

Do not place HMA on any wet surface, or when the average surface temperatures are less than those specified below, or when weather conditions otherwise prevent the proper handling or finishing of the HMA.

Minimum Surface Temperature for Paving

Compacted Thickness (Feet)	Wearing Course	Other Courses
Less than 0.10	55°F	45°F
0.10 to .20	45°F	35°F
More than 0.20	35°F	35°F

5-04.3(2) Paving Under Traffic
(December 12, 2025 APWA GSP)

When the Roadway being paved is open to traffic, the requirements of this Section shall apply.

The Contractor shall keep intersections open to traffic at all times except when paving the intersection or paving across the intersection. During such time, and provided that there has been an advance warning to the public, the intersection may be closed for the minimum time required to place and compact the mixture. In hot weather, the Engineer may require the application of water to the pavement to accelerate the finish rolling of the pavement and to shorten the time required before reopening to traffic.

Before closing an intersection, advance warning signs shall be placed, and signs shall also be placed marking the detour or alternate route.

During paving operations, temporary pavement markings shall be maintained throughout the project. Temporary pavement markings shall be installed on the Roadway prior to opening to traffic. Temporary pavement markings shall be in accordance with Section 8-23.

All costs in connection with performing the Work in accordance with these requirements, except the cost of temporary pavement markings, shall be included in the unit Contract prices for the various Bid items involved in the Contract.

5-04.3(3) Equipment
(December 12, 2025 APWA GSP)

5-04.3(3)A Mixing Plant
Plants used for the preparation of HMA shall conform to the following requirements:

1. **Equipment for Preparation of Asphalt Binder** – Tanks for the storage of asphalt binder shall be equipped to heat and hold the material at the required temperatures. The heating shall be accomplished by steam coils, electricity, or other approved means so that no flame shall be in contact with the storage tank. The circulating system for the asphalt binder shall be designed to ensure proper and continuous circulation during the operating period. A valve for the purpose of sampling the asphalt binder shall be placed in either the storage tank or in the supply line to the mixer.

2. **Thermometric Equipment** – An armored thermometer, capable of detecting temperature ranges expected in the HMA mix, shall be fixed in the asphalt binder feed line at a location near the charging valve at the mixer unit. The thermometer location shall be convenient and safe for access by Inspectors. The plant shall also be equipped with an approved dial-scale thermometer, a mercury actuated thermometer, an electric pyrometer, or another approved thermometric instrument placed at the discharge chute of the drier to automatically register or indicate the temperature of the heated aggregates. This device shall be in full view of the plant operator.

3. **Heating of Asphalt Binder** – The temperature of the asphalt binder shall not exceed the maximum recommended by the asphalt binder manufacturer nor shall it be below the minimum temperature required to maintain the asphalt binder in a homogeneous state. The asphalt binder shall be heated in a manner that will avoid local variations in heating. The heating method shall provide a continuous supply of asphalt binder to the mixer at a uniform average temperature with no individual variations exceeding 25°F. Also, when a WMA additive is included in the asphalt

binder, the temperature of the asphalt binder shall not exceed the maximum recommended by the manufacturer of the WMA additive.

4. **Sampling and Testing of Mineral Materials** – The HMA plant shall be equipped with a mechanical sampler for the sampling of the mineral materials. The mechanical sampler shall meet the requirements of Section 1-05.6 for the crushing and screening operation. The Contractor shall provide for the setup and operation of the field-testing facilities of the Contracting Agency as provided for in Section 3-01.2(2).

5. **Sampling HMA** – The HMA plant shall provide for sampling HMA by one of the following methods:

    a. A mechanical sampling device attached to the HMA plant.

    b. Platforms or devices to enable sampling from the hauling vehicle without entering the hauling vehicle.

5-04.3(3)B Hauling Equipment

Trucks used for hauling HMA shall have tight, clean, smooth metal beds and shall have a cover of canvas or other suitable material of sufficient size to protect the mixture from adverse weather. Whenever the weather conditions during the work shift include, or are forecast to include precipitation or an air temperature less than 45°F or when time from loading to unloading exceeds 30 minutes, the cover shall be securely attached to protect the HMA.

The Contractor shall provide an environmentally benign means to prevent the HMA mixture from adhering to the hauling equipment. Excess release agent shall be drained prior to filling hauling equipment with HMA. Petroleum derivatives or other coating material that contaminate or alter the characteristics of the HMA shall not be used. For live bed trucks, the conveyer shall be in operation during the process of applying the release agent.

5-04.3(3)C Pavers

HMA pavers shall be self-contained, power-propelled units, provided with an internally heated vibratory screed and shall be capable of spreading and finishing courses of HMA plant mix material in lane widths required by the paving section shown in the Plans.

The HMA paver shall be in good condition and shall have the most current equipment available from the manufacturer for the prevention of segregation of the HMA mixture installed, in good condition, and in working order. The equipment certification shall list the make, model, and year of the paver and any equipment that has been retrofitted.

The screed shall be operated in accordance with the manufacturer's recommendations and

shall effectively produce a finished surface of the required evenness and texture without tearing, shoving, segregating, or gouging the mixture. A copy of the manufacturer's recommendations shall be provided upon request by the Contracting Agency. Extensions will be allowed provided they produce the same results, including ride, density, and surface texture as obtained by the primary screed. Extensions without augers and an internally heated vibratory screed shall not be used in the Traveled Way.

When specified in the Contract, reference lines for vertical control will be required. Lines shall be placed on both outer edges of the Traveled Way of each Roadway. Horizontal control utilizing the reference line will be permitted. The grade and slope for intermediate lanes shall be controlled automatically from reference lines or by means of a mat referencing device and a slope control device. When the finish of the grade prepared for paving is superior to the established tolerances and when, in the opinion of the Engineer, further improvement to the line, grade, cross-section, and smoothness can best be achieved without the use of the reference line, a mat referencing device may be substituted for the reference line. Substitution of the device will be subject to the continued approval of the Engineer. A joint matcher may be used subject to the approval of the Engineer. The reference line may be removed after the completion of the first course of HMA when approved by the Engineer. Whenever the Engineer determines that any of these methods are failing to provide the necessary vertical control, the reference lines will be reinstalled by the Contractor.

The Contractor shall furnish and install all pins, brackets, tensioning devices, wire, and accessories necessary for satisfactory operation of the automatic control equipment.

If the paving machine in use is not providing the required finish, the Engineer may suspend Work as allowed by Section 1-08.6. Any cleaning or solvent type liquids spilled on the pavement shall be thoroughly removed before paving proceeds.

5-04.3(3)D Material Transfer Device or Material Transfer Vehicle

A Material Transfer Device/Vehicle (MTD/V) shall only be used with the Engineer's approval, unless otherwise required by the Contract.

Where an MTD/V is required by the Contract, the Engineer may approve paving without an MTD/V, at the request of the Contractor. The Engineer will determine if an equitable adjustment in cost or time is due.

When used, the MTD/V shall mix the HMA after delivery by the hauling equipment and prior to placement by the paving machine. Mixing of the HMA shall be sufficient to obtain a uniform temperature throughout the mixture. If a windrow elevator is used, the length of the windrow may be limited in urban areas or through intersections, at the discretion of the Engineer.

To be approved for use, an MTV:

1. Shall be self-propelled vehicle, separate from the hauling vehicle or paver.

2. Shall not be connected to the hauling vehicle or paver.

3. May accept HMA directly from the haul vehicle or pick up HMA from a windrow.

4. Shall mix the HMA after delivery by the hauling equipment and prior to placement into the paving machine.

5. Shall mix the HMA sufficiently to obtain a uniform temperature throughout the mixture.

To be approved for use, an MTD:

1. Shall be positively connected to the paver.

2. May accept HMA directly from the haul vehicle or pick up HMA from a windrow.

3. Shall mix the HMA after delivery by the hauling equipment and prior to placement into the paving machine.

4. Shall mix the HMA sufficiently to obtain a uniform temperature throughout the mixture.

5-04.3(3)E Rollers

Rollers shall be of the steel wheel, vibratory, oscillatory, or pneumatic tire type, in good condition and capable of reversing without backlash. Operation of the roller shall be in accordance with the manufacturer's recommendations. When ordered by the Engineer for any roller planned for use on the project, the Contractor shall provide a copy of the manufacturer's recommendation for the use of that roller for compaction of HMA. The number and weight of rollers shall be sufficient to compact the mixture in compliance with the requirements of Section 5-04.3(10). The use of equipment that results in crushing of the aggregate will not be permitted. Rollers producing pickup, washboard, uneven compaction of the surface, displacement of the mixture or other undesirable results shall not be used.

5-04.3(4) Preparation of Existing Paved Surfaces

(December 12, 2025 APWA GSP and October 15, 2025 MLT GSP as underlined)

When the surface of the existing pavement or old base is irregular, the Contractor shall bring it to a uniform grade and cross-section as shown on the Plans or approved by the Engineer.

Preleveling of uneven or broken surfaces over which HMA is to be placed may be accomplished by using an asphalt paver, a motor patrol grader, or by hand raking, as approved by the Engineer.

The prelevel material shall be place on the roadway to restore the pavement grade and cross section by filling dips, sags, wheel ruts and distorted area within the roadway limits to be paved. The existing average slope from centerline for the roadway section shall be maintained.

Preleveling shall only be performed where directed by the Engineer.

Compaction of preleveling HMA shall be to the satisfaction of the Engineer and may require the use of small steel wheel rollers, plate compactors, or pneumatic rollers to avoid bridging across preleveled areas by the compaction equipment. Equipment used for the compaction of preleveling HMA shall be approved by the Engineer.

Before construction of HMA on an existing paved surface, the entire surface of the pavement shall be clean. All fatty asphalt patches, grease drippings, and other objectionable matter shall be entirely removed from the existing pavement. All pavements or bituminous surfaces shall be thoroughly cleaned of dust, soil, pavement grindings, and other foreign matter. All holes and small depressions shall be filled with an appropriate class of HMA. The surface of the patched area shall be leveled and compacted thoroughly. Prior to the application of tack coat, or paving, the condition of the surface shall be approved by the Engineer.

A tack coat of asphalt shall be applied to all paved surfaces on which any course of HMA is to be placed or abutted; except that tack coat may be omitted from clean, newly paved surfaces at the discretion of the Engineer. Tack coat shall be uniformly applied to cover the existing pavement with a thin film of residual asphalt free of streaks and bare spots at a rate between 0.02 and 0.10 gallons per square yard of retained asphalt. The rate of application shall be approved by the Engineer. A heavy application of tack coat shall be applied to all joints. For Roadways open to traffic, the application of tack coat shall be limited to surfaces that will be paved during the same working shift. The spreading equipment shall be equipped with a thermometer to indicate the temperature of the tack coat material.

Equipment shall not operate on tacked surfaces until the tack has broken and cured. If the Contractor's operation damages the tack coat it shall be repaired prior to placement of the HMA.

The tack coat shall be CSS-1, or CSS-1h emulsified asphalt. The CSS-1 and CSS-1h emulsified asphalt may be diluted once with water at a rate not to exceed one-part water to one-part emulsified asphalt. The tack coat shall have sufficient temperature such that it may be applied uniformly at the specified rate of application and shall not exceed the maximum temperature recommended by the emulsified asphalt manufacturer. PG grade asphalt or non-tracking tack formulas may be used upon approval of the Engineer.

5-04.3(4)A Crack Sealing

When the Proposal includes a pay item for crack sealing, seal cracks in accordance with Section 5-03.

5-04.3(4)B Vacant

5-04.3(4)C Pavement Repair

The Contractor shall excavate pavement repair areas and shall backfill these with HMA in accordance with the details shown in the Plans and as marked in the field. The Contractor shall conduct the excavation operations in a manner that will protect the pavement that is to remain. Pavement not designated to be removed that is damaged as a result of the Contractor's operations shall be repaired by the Contractor to the satisfaction of the Engineer at no cost to the Contracting Agency. The Contractor shall excavate only within one lane at a time unless approved otherwise by the Engineer. The Contractor shall not excavate more area than can be completely finished during the same shift, unless approved by the Engineer.

Unless otherwise shown in the Plans or determined by the Engineer, excavate to a depth of 1.0 feet. The Engineer will make the final determination of the excavation depth required. The minimum width of any pavement repair area shall be 40 inches unless shown otherwise in the Plans. Before any excavation, the existing pavement shall be sawcut or shall be removed by a pavement grinder. Excavated materials will become the property of the Contractor and shall be disposed of in a Contractor-provided site off the Right of Way or used in accordance with Sections 2-02.3(3) or 9-03.21.

Asphalt for tack coat shall be required as specified in Section 5-04.3(4). A heavy application of tack coat shall be applied to all surfaces of existing pavement in the pavement repair area.

Placement of the HMA backfill shall be accomplished in lifts not to exceed 0.35-foot compacted depth. Lifts that exceed 0.35-foot of compacted depth may be accomplished with the approval of the Engineer. Each lift shall be thoroughly compacted by a mechanical

tamper or a roller.

5-04.3(5) Producing/Stockpiling Aggregates and RAP
(December 12, 2025 APWA GSP)

Aggregates and RAP shall be stockpiled according to the requirements of Section 3-02. Sufficient storage space shall be provided for each size of aggregate and RAP. Materials shall be removed from stockpile(s) in a manner to ensure minimal segregation when being moved to the HMA plant for processing into the final mixture. Different aggregate sizes shall be kept separated until they have been delivered to the HMA plant.

5-04.3(5)A Vacant

5-04.3(6) Mixing
(December 12, 2025 APWA GSP)

After the required amount of mineral materials, asphalt binder, recycling agent and anti-stripping additives have been introduced into the mixer the HMA shall be mixed until complete and uniform coating of the particles and thorough distribution of the asphalt binder throughout the mineral materials is ensured.

When discharged, the temperature of the HMA shall not exceed the optimum mixing temperature by more than 25°F as shown on the reference mix design report or as approved by the Engineer. Also, when a WMA additive is included in the manufacture of HMA, the discharge temperature of the HMA shall not exceed the maximum recommended by the manufacturer of the WMA additive. A maximum water content of 2 percent in the mix, at discharge, will be allowed providing the water causes no problems with handling, stripping, or flushing. If the water in the HMA causes any of these problems, the moisture content shall be reduced as directed by the Engineer.

Storing or holding of the HMA in approved storage facilities will be permitted with approval of the Engineer, but in no event shall the HMA be held for more than 24 hours. HMA held for more than 24 hours after mixing shall be rejected. Rejected HMA shall be disposed of by the Contractor at no expense to the Contracting Agency. The storage facility shall have an accessible device located at the top of the cone or about the third point. The device shall indicate the amount of material in storage. No HMA shall be accepted from the storage facility when the HMA in storage is below the top of the cone of the storage facility, except as the storage facility is being emptied at the end of the working shift.

Recycled asphalt pavement (RAP) utilized in the production of HMA shall be sized prior to entering the mixer so that a uniform and thoroughly mixed HMA is produced. If there is evidence of the recycled asphalt pavement not breaking down during the heating and mixing of the HMA, the Contractor shall immediately suspend the use of the RAP until changes have been approved by the Engineer. After the required amount of mineral

materials, RAP, new asphalt binder and asphalt rejuvenator have been introduced into the mixer the HMA shall be mixed until complete and uniform coating of the particles and thorough distribution of the asphalt binder throughout the mineral materials, and RAP is ensured.

5-04.3(7) Spreading and Finishing

(December 12, 2025 APWA GSP)

The mixture shall be placed upon an approved surface, spread, and struck off to the grade and elevation established. HMA pavers complying with Section 5-04.3(3) shall be used to distribute the mixture. Unless otherwise directed by the Engineer, the nominal compacted depth of any layer of any course shall not exceed the following:

HMA Class 1”		0.35 feet
HMA Class ¾” and HMA Class ½”		
	wearing course	0.30 feet
	other courses	0.35 feet
HMA Class ⅜”		0.15 feet

On areas where irregularities or unavoidable obstacles make the use of mechanical spreading and finishing equipment impractical, the paving may be done with other equipment or by hand.

When more than one JMF is being utilized to produce HMA, the material produced for each JMF shall be placed by separate spreading and compacting equipment. The intermingling of HMA produced from more than one JMF is prohibited. Each strip of HMA placed during a work shift shall conform to a single JMF established for the class of HMA specified unless there is a need to make an adjustment in the JMF.

5-04.3(8) Aggregate Acceptance Prior to Incorporation in HMA

(December 12, 2025 APWA GSP)

For HMA accepted by nonstatistical evaluation, the aggregate properties of sand equivalent, uncompacted void content, and fracture will be evaluated in accordance with Section 3-04. Sampling and testing of aggregates for HMA accepted by commercial evaluation will be at the option of the Engineer.

5-04.3(9) HMA Mixture Acceptance

(December 12, 2025 APWA GSP)

Acceptance of HMA shall be as provided under nonstatistical, or commercial evaluation.

Nonstatistical evaluation will be used for the acceptance of HMA unless Commercial

Evaluation is specified.

Commercial evaluation will be used for Commercial HMA and for other classes of HMA in the following applications: sidewalks, road approaches, ditches, slopes, paths, trails, gores, prelevel, temporary pavement, and pavement repair. Other nonstructural applications of HMA accepted by commercial evaluation shall be as approved by the Engineer. Sampling and testing of HMA accepted by commercial evaluation will be at the option of the Engineer.

The mix design will be the initial JMF for the class of HMA. The Contractor may request a change in the JMF. Any adjustments to the JMF will require the approval of the Engineer and may be made in accordance with this section.

HMA Tolerances and Adjustments

1. **Job Mix Formula Tolerances** – The constituents of the mixture at the time of acceptance shall be within tolerance. The tolerance limits will be established as follows:

   For Asphalt Binder and Air Voids (Va), the acceptance limits are determined by adding the tolerances below to the approved JMF values. These values will also be the Upper Specification Limit (USL) and Lower Specification Limit (LSL) required in Section 1-06.2(2)D2

Property	Non-Statistical Evaluation	Commercial Evaluation
Asphalt Binder	+/- 0.5%	+/- 0.7%
Air Voids, Va	2.5% min. and 5.5% max	N/A

   For Aggregates in the mixture:

   a. First, determine preliminary upper and lower acceptance limits by applying the following tolerances to the approved JMF.

Aggregate Percent Passing	Non-Statistical Evaluation	Commercial Evaluation
1”, ¾”, ½”, and 3/8” sieves	+/- 6%	+/- 8%
No. 4 sieve	+/-6%	+/- 8%
No. 8 Sieve	+/- 6%	+/-8%
No. 200 sieve	+/- 2.0%	+/- 3.0%

   b. Second, adjust the preliminary upper and lower acceptance limits determined from step (a) the minimum amount necessary so that none of

the aggregate properties are outside the control points in Section 9-03.8(6), except as specified below in (c). The resulting values will be the upper and lower acceptance limits for aggregates, as well as the USL and LSL required in Section 1-06.2(2)D2.

c. These tolerances and specification limits constitute the allowable limits as described in Section 1-06.2. The tolerance limit for aggregate shall not exceed the limits of the control points, except the No. 8 tolerance is +/- 6% from the JMF, the No. 200 tolerance is +/- 2.0% from the JMF with a minimum of 2% and a maximum of 8.0% passing the No. 200 sieve. Other tolerance limits for sieves designated as 100 percent passing will be 99-100.

2. **Job Mix Formula Adjustments** – An adjustment to the aggregate gradation or asphalt binder content of the JMF requires approval of the Engineer. Adjustments to the JMF will only be considered if the change produces material of equal or better quality and may require the development of a new mix design if the adjustment exceeds the amounts listed below.

   a. **Aggregates** –2 percent for the aggregate passing the 1½″, 1″, ¾″, ½″, ⅜″, and the No. 4 sieves, 1 percent for aggregate passing the No. 8 sieve, and 0.5 percent for the aggregate passing the No. 200 sieve. The adjusted JMF shall be within the range of the control points in Section 9-03.8(6).

   b. **Asphalt Binder Content** – The Engineer may order or approve changes to asphalt binder content. The maximum adjustment from the approved mix design for the asphalt binder content shall be 0.3 percent.

5-04.3(9)A Vacant

5-04.3(9)B Vacant

5-04.3(9)C Mixture Acceptance – Nonstatistical Evaluation

HMA mixture which is accepted by Nonstatistical Evaluation will be evaluated by the Contracting Agency by dividing the HMA tonnage into lots.

5-04.3(9)C1 Mixture Nonstatistical Evaluation – Lots and Sublots

A lot is represented by randomly selected samples of the same mix design that will be tested for acceptance. A lot is defined as the total quantity of material or work produced for each Job Mix Formula placed. Only one lot per JMF is expected. A sublot shall be equal to one day's production or 800 tons, whichever is less except that the final sublot will be a minimum of 400 tons and may be increased to 1200 tons.

All of the test results obtained from the acceptance samples from a given lot shall be evaluated collectively. If the Contractor requests a change to the JMF that is approved, the

material produced after the change will be evaluated on the basis of the new JMF for the remaining sublots in the current lot and for acceptance of subsequent lots. For a lot in progress with a CPF less than 0.75, a new lot will begin at the Contractor's request after the Engineer is satisfied that material conforming to the Specifications can be produced.

Sampling and testing for evaluation shall be performed on the frequency of one sample per sublot.

5-04.3(9)C2 Mixture Nonstatistical Evaluation Sampling

Samples for acceptance testing shall be obtained by the Contractor when ordered by the Engineer. The Contractor shall sample the HMA mixture in the presence of the Engineer and in accordance with AASHTO T 168. A minimum of three samples should be taken for each class of HMA placed on a project. If used in a structural application, at least one of the three samples shall be tested.

Sampling and testing HMA in a structural application where quantities are less than 400 tons is at the discretion of the Engineer.

For HMA used in a structural application and with a total project quantity less than 800 tons but more than 400 tons, a minimum of one acceptance test shall be performed. In all cases, a minimum of 3 samples will be obtained at the point of acceptance, a minimum of one of the three samples will be tested for conformance to the JMF:

- If the test results are found to be within specification requirements, additional testing will be at the Engineer's discretion.

- If test results are found not to be within specification requirements, additional testing of the remaining samples to determine a CPF shall be performed.

5-04.3(9)C3 Mixture Nonstatistical Evaluation – Acceptance Testing

Testing of HMA for compliance of V_a will at the option of the Contracting Agency. If tested, compliance of V_a will use WSDOT SOP 731.

Testing for compliance of asphalt binder content will be by WSDOT FOP for AASHTO T 308.

Testing for compliance of gradation will be by FOP for WAQTC T 27/T 11.

5-04.3(9)C4 Mixture Nonstatistical Evaluation – Pay Factors

For each lot of material falling outside the tolerance limits in 5-04.3(9), the Contracting Agency will determine a CPF using the following price adjustment factors:

Table of Price Adjustment Factors	
Constituent	**Factor "f"**
All aggregate passing: 1½″, 1″, ¾″, ½″, ⅜″ and No.4 sieves	2
All aggregate passing No. 8 sieve	15
All aggregate passing No. 200 sieve	20
Asphalt binder	40
Air Voids (Va) (where applicable)	20

Each lot of HMA produced under Nonstatistical Evaluation and having all constituents falling within the tolerance limits of the job mix formula shall be accepted at the unit Contract price with no further evaluation. When one or more constituents fall outside the nonstatistical tolerance limits in the Job Mix Formula shown in Table of Price Adjustment Factors, the lot shall be evaluated in accordance with Section 1-06.2 to determine the appropriate CPF. The nonstatistical tolerance limits will be used in the calculation of the CPF and the maximum CPF shall be 1.00. When less than three sublots exist, backup samples of the existing sublots or samples from the Roadway shall be tested to provide a minimum of three sets of results for evaluation.

5-04.3(9)C5 Vacant

5-04.3(9)C6 Mixture Nonstatistical Evaluation – Price Adjustments

For each lot of HMA mix produced under Nonstatistical Evaluation when the calculated CPF is less than 1.00, a Nonconforming Mix Factor (NCMF) will be determined. The NCMF equals the algebraic difference of CPF minus 1.00 multiplied by 60 percent. The total job mix compliance price adjustment will be calculated as the product of the NCMF, the quantity of HMA in the lot in tons, and the unit Contract price per ton of mix.

If a constituent is not measured in accordance with these Specifications, its individual pay factor will be considered 1.00 in calculating the CPF.

5-04.3(9)C7 Mixture Nonstatistical Evaluation - Retests

The Contractor may request a sublot be retested. To request a retest, the Contractor shall submit a written request within 7 calendar days after the specific test results have been received. A split of the original acceptance sample will be retested. The split of the sample will not be tested with the same tester that ran the original acceptance test. The sample will be tested for a complete gradation analysis, asphalt binder content, and, at the option of the agency, V_a. The results of the retest will be used for the acceptance of the HMA in place of the original sublot sample test results. The cost of testing will be deducted from any monies due or that may come due the Contractor under the Contract at the rate of $500 per

sample.

5-04.3(9)D Mixture Acceptance – Commercial Evaluation

If sampled and tested, HMA produced under Commercial Evaluation and having all constituents falling within the tolerance limits of the job mix formula shall be accepted at the unit Contract price with no further evaluation. When one or more constituents fall outside the commercial tolerance limits in the Job Mix Formula shown in 5-04.3(9), the lot shall be evaluated in accordance with Section 1-06.2 to determine the appropriate CPF. The commercial tolerance limits will be used in the calculation of the CPF and the maximum CPF shall be 1.00. When less than three sublots exist, backup samples of the existing sublots or samples from the street shall be tested to provide a minimum of three sets of results for evaluation.

For each lot of HMA mix produced and tested under Commercial Evaluation when the calculated CPF is less than 1.00, a Nonconforming Mix Factor (NCMF) will be determined. The NCMF equals the algebraic difference of CPF minus 1.00 multiplied by 60 percent. The Job Mix Compliance Price Adjustment will be calculated as the product of the NCMF, the quantity of HMA in the lot in tons, and the unit Contract price per ton of mix.

If a constituent is not measured in accordance with these Specifications, its individual pay factor will be considered 1.00 in calculating the CPF.

5-04.3(10) HMA Compaction Acceptance

(December 12, 2025 APWA GSP)

HMA mixture accepted by nonstatistical evaluation that is used in traffic lanes, including lanes for intersections, ramps, truck climbing, weaving, and speed change, and having a specified compacted course thickness greater than 0.10-foot, shall be compacted to a specified level of relative density. The specified level of relative density shall be a CPF of not less than 0.75 when evaluated in accordance with Section 1-06.2, using a LSL of 92.0 (minimum of 92 percent of the maximum density). The maximum density shall be determined by WSDOT FOP for AASHTO T 729. The specified level of density attained will be determined by the evaluation of the density of the pavement. The density of the pavement shall be determined in accordance with WSDOT FOP for WAQTC TM 8, except that gauge correlation will be at the discretion of the Engineer, when using the nuclear density gauge and WSDOT SOP 736 when using cores to determine density.

Tests for the determination of the pavement density will be taken in accordance with the required procedures for measurement by a nuclear density gauge or Roadway cores after completion of the finish rolling.

If the Contracting Agency uses a nuclear density gauge to determine density the test procedures FOP for WAQTC TM 8 and WSDOT SOP T 729 will be used on the day the mix is placed and prior to opening to traffic.

Roadway cores for density may be obtained by either the Contracting Agency or the Contractor in accordance with WSDOT SOP 734. The core diameter shall be 4-inches minimum, unless otherwise approved by the Engineer. Roadway cores will be tested by the Contracting Agency in accordance with WSDOT FOP for AASHTO T 166.

If the Contract includes the Bid item "Roadway Core", the cores shall be obtained by the Contractor in the presence of the Engineer on the same day the mix is placed and at locations designated by the Engineer. If the Contract does not include the Bid item "Roadway Core", the Contracting Agency will obtain the cores.

For a lot in progress with a CPF less than 0.75, a new lot will begin at the Contractor's request after the Engineer is satisfied that material conforming to the Specifications can be produced.

HMA mixture accepted by commercial evaluation and HMA constructed under conditions other than those listed above shall be compacted on the basis of a test point evaluation of the compaction train. The test point evaluation shall be performed in accordance with instructions from the Engineer. The number of passes with an approved compaction train, required to attain the maximum test point density, shall be used on all subsequent paving.

HMA for preleveling shall be thoroughly compacted. HMA that is used for preleveling wheel rutting shall be compacted with a pneumatic tire roller unless otherwise approved by the Engineer.

Test Results

For a sublot that has been tested with a nuclear density gauge that did not meet the minimum of 92 percent of the reference maximum density in a compaction lot with a CPF below 1.00 and thus subject to a price reduction or rejection, the Contractor may request that a core be used for determination of the relative density of the sublot. The relative density of the core will replace the relative density determined by the nuclear density gauge for the sublot and will be used for calculation of the CPF and acceptance of HMA compaction lot.

When cores are taken by the Contracting Agency at the request of the Contractor, they shall be requested by noon of the next workday after the test results for the sublot have been provided or made available to the Contractor. Core locations shall be outside of wheel paths and as determined by the Engineer. Traffic control shall be provided by the Contractor as requested by the Engineer. Failure by the Contractor to provide the requested traffic control will result in forfeiture of the request for cores. When the CPF for the lot based on the results of the HMA cores is less than 1.00, the cost for the coring will be deducted from any monies due or that may become due the Contractor under the Contract at the rate of $200 per core and the Contractor shall pay for the cost of the traffic control.

5-04.3(10)A HMA Compaction – General Compaction Requirements

Compaction shall take place when the mixture is in the proper condition so that no undue displacement, cracking, or shoving occurs. Areas inaccessible to large compaction equipment shall be compacted by other mechanical means. Any HMA that becomes loose, broken, contaminated, shows an excess or deficiency of asphalt, or is in any way defective, shall be removed and replaced with new hot mix that shall be immediately compacted to conform to the surrounding area.

The type of rollers to be used and their relative position in the compaction sequence shall generally be the Contractor's option, provided the specified densities are attained. Unless the Engineer has approved otherwise, rollers shall only be operated in the static mode when the internal temperature of the mix is less than 175°F. Regardless of mix temperature, a roller shall not be operated in a mode that results in checking or cracking of the mat. Rollers shall only be operated in static mode on bridge decks.

5-04.3(10)B HMA Compaction - Cyclic Density

Low cyclic density areas are defined as spots or streaks in the pavement that are less than 90 percent of the theoretical maximum density. At the Engineer's discretion, the Engineer may evaluate the HMA pavement for low cyclic density, and when doing so will follow WSDOT SOP 733. A $1500 Cyclic Density Price Adjustment will be assessed for any 500-foot section with two or more density readings below 90 percent of the theoretical maximum density.

5-04.3(10)C Vacant

5-04.3(10)D HMA Nonstatistical Compaction

5-04.3(10)D1 HMA Nonstatistical Compaction - Lots and Sublots

HMA compaction which is accepted by nonstatistical evaluation will be based on acceptance testing performed by the Contracting Agency dividing the project into compaction lots.

A lot is represented by randomly selected samples of the same mix design that will be tested for acceptance. A lot is defined as the total quantity of material or work produced for each Job Mix Formula placed. Only one lot per JMF is expected. A sublot shall be equal to one day's production or 400 tons, whichever is less except that the final sublot will be a minimum of 200 tons and may be increased to 800 tons. Testing for compaction will be at the rate of 5 tests per sublot per WSDOT T 738.

The sublot locations within each density lot will be determined by the Engineer. For a lot in progress with a CPF less than 0.75, a new lot will begin at the Contractor's request after the Engineer is satisfied that material conforming to the Specifications can be produced.

HMA mixture accepted by commercial evaluation and HMA constructed under conditions other than those listed above shall be compacted on the basis of a test point evaluation of the compaction train. The test point evaluation shall be performed in accordance with instructions from the Engineer. The number of passes with an approved compaction train, required to attain the maximum test point density, shall be used on all subsequent paving.

HMA for preleveling shall be thoroughly compacted. HMA that is used to prelevel wheel ruts shall be compacted with a pneumatic tire roller unless otherwise approved by the Engineer.

5-04.3(10)D2 HMA Compaction Nonstatistical Evaluation – Acceptance Testing

The location of the HMA compaction acceptance tests will be randomly selected by the Engineer from within each sublot, with one test per sublot.

5-04.3(10)D3 HMA Nonstatistical Compaction – Price Adjustments

For each compaction lot with one or two sublots, having all sublots attain a relative density that is 92 percent of the reference maximum density the HMA shall be accepted at the unit Contract price with no further evaluation. When a sublot does not attain a relative density that is 92 percent of the reference maximum density, the lot shall be evaluated in accordance with Section 1-06.2 to determine the appropriate CPF. The maximum CPF shall be 1.00, however, lots with a calculated CPF in excess of 1.00 will be used to offset lots with CPF values below 1.00 but greater than 0.90. Lots with CPF lower than 0.90 will be evaluated for compliance per 5-04.3(11). Additional testing by either a nuclear moisture-density gauge or cores will be completed as required to provide a minimum of three tests for evaluation.

For compaction below the required 92%, a Non-Conforming Compaction Factor (NCCF) will be determined. The NCCF equals the algebraic difference of CPF minus 1.00 multiplied by 40 percent. The Compaction Price Adjustment will be calculated as the product of CPF, the quantity of HMA in the compaction control lot in tons, and the unit Contract price per ton of mix.

5-04.3(11) Reject Work

(December 12, 2025 APWA GSP)

5-04.3(11)A Reject Work General

Work that is defective or does not conform to Contract requirements shall be rejected. The Contractor may propose, in writing, alternatives to removal and replacement of rejected material. Acceptability of such alternative proposals will be determined at the sole discretion of the Engineer. HMA that has been rejected is subject to the requirements in Section 1-06.2(2) and this specification, and the Contractor shall submit a corrective action proposal to the Engineer for approval.

5-04.3(11)B Rejection by Contractor

The Contractor may, prior to sampling, elect to remove any defective material and replace it with new material. Any such new material will be sampled, tested, and evaluated for acceptance.

5-04.3(11)C Rejection Without Testing (Mixture or Compaction)

The Engineer may, without sampling, reject any batch, load, or section of Roadway that appears defective. Material rejected before placement shall not be incorporated into the pavement. Any rejected section of Roadway shall be removed.

No payment will be made for the rejected materials or the removal of the materials unless the Contractor requests that the rejected material be tested. If the Contractor elects to have the rejected material tested, a minimum of three representative samples will be obtained and tested. Acceptance of rejected material will be based on conformance with the nonstatistical acceptance Specification. If the CPF for the rejected material is less than 0.75, no payment will be made for the rejected material; in addition, the cost of sampling and testing shall be borne by the Contractor. If the CPF is greater than or equal to 0.75, the cost of sampling and testing will be borne by the Contracting Agency. If the material is rejected before placement and the CPF is greater than or equal to 0.75, compensation for the rejected material will be at a CPF of 0.75. If rejection occurs after placement and the CPF is greater than or equal to 0.75, compensation for the rejected material will be at the calculated CPF with an addition of 25 percent of the unit Contract price added for the cost of removal and disposal.

5-04.3(11)D Rejection - A Partial Sublot

In addition to the random acceptance sampling and testing, the Engineer may also isolate from a normal sublot any material that is suspected of being defective in relative density, gradation or asphalt binder content. Such isolated material will not include an original sample location. A minimum of three random samples of the suspect material will be obtained and tested. The material will then be statistically evaluated as an independent lot in accordance with Section 1-06.2(2).

5-04.3(11)E Rejection - An Entire Sublot

An entire sublot that is suspected of being defective may be rejected. When a sublot is rejected a minimum of two additional random samples from this sublot will be obtained. These additional samples and the original sublot will be evaluated as an independent lot in accordance with Section 1-06.2(2).

5-04.3(11)F Rejection - A Lot in Progress

The Contractor shall shut down operations and shall not resume HMA placement until such time as the Engineer is satisfied that material conforming to the Specifications can be produced:

1. When the CPF of a lot in progress drops below 1.00 and the Contractor is taking no corrective action, or
2. When the Pay Factor (PF) for any constituent of a lot in progress drops below 0.95 and the Contractor is taking no corrective action, or
3. When either the PF for any constituent or the CPF of a lot in progress is less than 0.75.

5-04.3(11)G Rejection - An Entire Lot (Mixture or Compaction)

An entire lot with a CPF of less than 0.75 will be rejected.

5-04.3(12) Joints

(December 12, 2025 APWA GSP)

5-04.3(12)A HMA Joints

5-04.3(12)A1 Transverse Joints

The Contractor shall conduct operations such that the placing of the top or wearing course is a continuous operation or as close to continuous as possible. Unscheduled transverse joints will be allowed, and the roller may pass over the unprotected end of the freshly placed mixture only when the placement of the course must be discontinued for such a length of time that the mixture will cool below compaction temperature. When the Work is resumed, the previously compacted mixture shall be cut back to produce a slightly beveled edge for the full thickness of the course.

A temporary wedge of HMA constructed on a 20H:1V shall be constructed where a transverse joint as a result of paving or planing is open to traffic. The HMA in the temporary wedge shall be separated from the permanent HMA by strips of heavy wrapping paper or other methods approved by the Engineer. The wrapping paper shall be removed and the joint trimmed to a slightly beveled edge for the full thickness of the course prior to resumption of paving.

The material that is cut away shall be wasted and new mix shall be placed against the cut. Rollers or tamping irons shall be used to seal the joint.

5-04.3(12)A2 Longitudinal Joints

The longitudinal joint in any one course shall be offset from the course immediately below by not more than 6 inches nor less than 2 inches. All longitudinal joints constructed in the wearing course shall be located at a lane line or an edge line of the Traveled Way. A notched wedge joint shall be constructed along all longitudinal joints in the wearing surface of new HMA unless otherwise approved by the Engineer. The notched wedge joint shall have a vertical edge of not less than the maximum aggregate size or more than ½ of the compacted lift thickness and then taper down on a slope not steeper than 4H:1V. The sloped

portion of the HMA notched wedge joint shall be uniformly compacted.

5-04.3(12)B Bridge Paving Joint Seals

Bridge Paving Joint Seals shall be in accordance with Section 5-03.

5-04.3(13) Surface Smoothness

(December 12, 2025 APWA GSP)

The completed surface of all courses shall be of uniform texture, smooth, uniform as to crown and grade, and free from defects of all kinds. The completed surface of the wearing course shall not vary more than ⅛ inch from the lower edge of a 10-foot straightedge placed on the surface parallel to the centerline. The transverse slope of the completed surface of the wearing course shall vary not more than ¼ inch in 10 feet from the rate of transverse slope shown in the Plans.

When deviations in excess of the above tolerances are found that result from a high place in the HMA, the pavement surface shall be corrected by one of the following methods:

1. Removal of material from high places by grinding with an approved grinding machine, or

2. Removal and replacement of the wearing course of HMA, or

3. By other method approved by the Engineer.

Correction of defects shall be carried out until there are no deviations anywhere greater than the allowable tolerances.

Deviations in excess of the above tolerances that result from a low place in the HMA and deviations resulting from a high place where corrective action, in the opinion of the Engineer, will not produce satisfactory results will be accepted with a price adjustment. The Engineer shall deduct from monies due or that may become due to the Contractor the sum of $1500.00 for each and every section of single traffic lane 100 feet in length in which any excessive deviations described above are found.

When utility appurtenances such as manhole covers and valve boxes are located in the traveled way, the utility appurtenances shall be adjusted to the finished grade prior to paving. This requirement may be waived when requested by the Contractor, at the discretion of the Engineer or when the adjustment details provided in the project plan or specifications call for utility appurtenance adjustments after the completion of paving.

Utility appurtenance adjustment discussions will be included in the Pre-Paving and Pre-

Planing Briefing (5-04.3(14)B3). Submit a written request to waive this requirement to the Engineer prior to the start of paving.

5-04.3(14) Planing (Milling) Bituminous Pavement
(December 12, 2025 APWA GSP)

The planing plan must be approved by the Engineer and a pre-planing meeting must be held prior to the start of any planing. See Section 5-04.3(14)B2 for information on planing submittals.

Where planing an existing pavement is specified in the Contract, the Contractor must remove existing surfacing material and to reshape the surface to remove irregularities. The finished product must be a prepared surface acceptable for receiving an HMA overlay.

Use the cold milling method for planing unless otherwise specified in the Contract. Do not use the planer on the final wearing course of new HMA.

Conduct planing operations in a manner that does not tear, break, burn, or otherwise damage the surface which is to remain. The finished planed surface must be slightly grooved or roughened and must be free from gouges, deep grooves, ridges, or other imperfections. The Contractor must repair any damage to the surface by the Contractor's planing equipment, using an Engineer approved method.

Repair or replace any metal castings and other surface improvements damaged by planing, as determined by the Engineer.

A tapered wedge cut must be planed longitudinally along curb lines sufficient to provide a minimum of 4 inches of curb reveal after placement and compaction of the final wearing course. The dimensions of the wedge must be as shown on the Drawings or as specified by the Engineer.

A tapered wedge cut must also be made at transitions to adjoining pavement surfaces (meet lines) where butt joints are shown on the Drawings. Cut butt joints in a straight line with vertical faces 2 inches or more in height, producing a smooth transition to the existing adjoining pavement.

After planing is complete, planed surfaces must be swept, cleaned, and if required by the Contract, patched and preleveled.

The Engineer may direct additional depth planing. Before performing this additional depth planing, the Contractor must conduct a hidden metal in pavement detection survey as specified in Section 5-04.3(14)A.

5-04.3(14)A Pre-Planing Metal Detection Check

(December 12, 2025 APWA GSP, deleted first paragraph and replace with underline May 15, 2023 MLT GSP)

Before starting removal of existing pavements by planing or excavating, the Contractor shall conduct a physical survey of existing pavement to be planed with equipment that can identify hidden metal objects, both ferrous and non-ferrous.

Should such metal be identified, promptly notify the Engineer.

See Section 1-07.16(1) regarding the protection of survey monumentation that may be hidden in pavement.

The Contractor is solely responsible for any damage to equipment resulting from the Contractor's failure to conduct a pre-planing metal detection survey, or from the Contractor's failure to notify the Engineer of any hidden metal that is detected.

5-04.3(14)B Paving and Planing Under Traffic

(December 12, 2025 APWA GSP)

5-04.3(14)B1 General

In addition, the requirements of Section 1-07.23 and the traffic controls required in Section 1-10, and unless the Contract specifies otherwise or the Engineer approves, the Contractor must comply with the following:

1. Intersections:

    a. Keep intersections open to traffic at all times, except when paving or planing operations through an intersection requires closure. Such closure must be kept to the minimum time required to place and compact the HMA mixture, or plane as appropriate. For paving, schedule such closure to individual lanes or portions thereof that allows the traffic volumes and schedule of traffic volumes required in the approved traffic control plan. Schedule work so that adjacent intersections are not impacted at the same time and comply with the traffic control restrictions required by the Traffic Engineer. Each individual intersection closure or partial closure must be addressed in the traffic control plan, which must be submitted to and accepted by the Engineer, see Section 1-10.2(2).

    b. When planing or paving and related construction must occur in an intersection, consider scheduling and sequencing such work into quarters of the intersection,

or half or more of an intersection with side street detours. Be prepared to sequence the work to individual lanes or portions thereof.

c. Should closure of the intersection in its entirety be necessary, and no trolley service is impacted, keep such closure to the minimum time required to place and compact the HMA mixture, plane, remove asphalt, tack coat, and as needed.

d. Any work in an intersection requires advance warning in both signage and a number of Working Days advance notice as determined by the Engineer, to alert traffic and emergency services of the intersection closure or partial closure.

e. Allow new compacted HMA asphalt to cool to ambient temperature before any traffic is allowed on it. Traffic is not allowed on newly placed asphalt until approval has been obtained from the Engineer.

2. Temporary centerline marking, post-paving temporary marking, temporary stop bars, and maintaining temporary pavement marking must comply with Section 8-23.

3. Permanent pavement marking must comply with Section 8-22.

5-04.3(14)B2 Submittals - Planing Plan and HMA Paving Plan

The Contractor must submit a separate planing plan and a separate paving plan to the Engineer at least 5 Working Days in advance of each operation's activity start date. These plans must show how the moving operation and traffic control are coordinated, as they will be discussed at the pre-planing briefing and pre-paving briefing. When requested by the Engineer, the Contractor must provide each operation's traffic control plan on 24 x 36 inch or larger size Shop Drawings with a scale showing both the area of operation and sufficient detail of traffic beyond the area of operation where detour traffic may be required. The scale on the Shop Drawings is 1 inch = 20 feet, which may be changed if the Engineer agrees sufficient detail is shown.

The planing operation and the paving operation include, but are not limited to, metal detection, removal of asphalt and temporary asphalt of any kind, tack coat and drying, staging of supply trucks, paving trains, rolling, scheduling, and as may be discussed at the briefing.

When intersections will be partially or totally blocked, provide adequately sized and noticeable signage alerting traffic of closures to come, a minimum 2 Working Days in advance. The traffic control plan must show where police officers will be stationed when signalization is or may be, countermanded, and show areas where flaggers are proposed.

At a minimum, the planing and the paving plan must include:

1. A copy of the accepted traffic control plan, see Section 1-10.2(2), detailing each day's traffic control as it relates to the specific requirements of that day's planing and paving. Briefly describe the sequencing of traffic control consistent with the proposed planing and paving sequence, and scheduling of placement of temporary pavement markings and channelizing devices after each day's planing, and paving.

2. A copy of each intersection's traffic control plan.

3. Haul routes from supplier facilities, and locations of temporary parking and staging areas, including return routes. Describe the complete round trip as it relates to the sequencing of paving operations.

4. Names and locations of HMA supplier facilities to be used.

5. List of all equipment to be used for paving.

6. List of personnel and associated job classification assigned to each piece of paving equipment.

7. Description (geometric or narrative) of the scheduled sequence of planing and of paving and intended area of planing and of paving for each day's work, must include the directions of proposed planing and of proposed paving, sequence of adjacent lane paving, sequence of skipped lane paving, intersection planing and paving scheduling and sequencing, and proposed notifications and coordinations to be timely made. The plan must show HMA joints relative to the final pavement marking lane lines.

8. Names, job titles, and contact information for field, office, and plant supervisory personnel.

9. A copy of the approved Mix Designs.

10. Tonnage of HMA to be placed each day.

11. Approximate times and days for starting and ending daily operations.

5-04.3(14)B3 Pre-Paving and Pre-Planing Briefing

At least 2 Working Days before the first paving operation and the first planing operation, or as scheduled by the Engineer for future paving and planing operations to ensure the Contractor has adequately prepared for notifying and coordinating as required in the

Contract, the Contractor must be prepared to discuss that day's operations as they relate to other entities and to public safety and convenience, including driveway and business access, garbage truck operations, transit operations and working around energized overhead wires, school and nursing home and hospital and other accesses, other Contractors who may be operating in the area, pedestrian and bicycle traffic, and emergency services. The Contractor, and Subcontractors that may be part of that day's operations, must meet with the Engineer and discuss the proposed operation as it relates to the submitted planing plan and paving plan, approved traffic control plan, and public convenience and safety. Such discussion includes, but is not limited to:

1. General for both the Paving and Planing:

   a. The actual times of starting and ending daily operations.

   b. In intersections, how to break up the intersection, and address traffic control and signalization for that operation, including use of peace officers.

   c. The sequencing and scheduling of paving operations and of planing operations, as applicable, as it relates to traffic control, public convenience and safety, and other Contractors who may operate in the Project limits.

   d. Notifications required of Contractor activities and coordinating with other entities and the public as necessary.

   e. Description of the sequencing of installation and types of temporary pavement markings as it relates to planing and paving.

   f. Description of the sequencing of installation of, and the removal of, temporary pavement patch material around exposed castings and as may be needed.

   g. Description of procedures and equipment to identify hidden metal in the pavement, such as survey monumentation, monitoring wells, streetcar rail, and castings, before planing as per Section 5-04.3(14)B2.

   h. Description of how flaggers will be coordinated with the planing, paving, and related operations.

   i. Description of sequencing of traffic controls for the process of rigid pavement base repairs.

   j. Other items the Engineer deems necessary to address.

2. Paving – additional topics:

   a. When to start applying tack and coordinating with paving.

   b. Types of equipment and numbers of each type of equipment to be used. If more pieces of equipment than personnel are proposed, describe the sequencing of the personnel operating the types of equipment. Discuss the continuance of operator personnel for each type of equipment as it relates to meeting Specification requirements.

   c. Number of JMFs to be placed, and if more than one JMF is used, how the Contractor will ensure different JMFs are distinguished, how pavers and how MTVs are distinguished, and how pavers and MTVs are cleaned so that one JMF does not adversely influence the other JMF.

   d. Description of contingency plans for that day's operations such as equipment breakdown, rain out, and supplier shutdown of operations.

   e. Number of sublots to be placed, sequencing of density testing, and other sampling and testing.

5-04.3(15) Sealing Pavement Surfaces
(December 12, 2025 APWA GSP)

Apply a fog seal where shown in the plans. Construct the fog seal in accordance with Section 5-02.3. Unless otherwise approved by the Engineer, apply the fog seal prior to opening to traffic.

5-04.3(16) HMA Road Approaches
(December 12, 2025 APWA GSP)

Construct HMA approaches at the locations shown in the Plans or where staked by the Engineer, in accordance with Section 5-04.

5-04.4 Measurement
(December 12, 2025 APWA GSP)

HMA Cl. ___ PG ___, HMA for ___ Cl. ___ PG ___, and Commercial HMA will be measured by the ton in accordance with Section 1-09.2, with no deduction being made for the weight of asphalt binder, mineral filler, or any other component of the mixture. If the Contractor elects to remove and replace mix as allowed by Section 5-04.3(11), the

material removed will not be measured.

Roadway cores will be measured per each for the number of cores taken.

Pavement repair excavation will be measured by the square yard of surface marked prior to excavation.

Planing bituminous pavement will be measured by the square yard.

5-04.4 Measurement

(June 15, 2023 MLT GSP)

Section 5-04.4 is supplemented - with the following:

Commercial HMA for Pavement Repair Class ½" PG 58H-22 Incl. Excavation and Haul shall be measured per ton of HMA installed. Pavement repair excavation and haul shall be incidental to the item.

"HMA Class ½" PG 58V-22" shall be measured per ton. The payment for the HMA preleveling shall be under the bid item "HMA Class ½" PG 58V-22" and no additional compensation shall be made for HMA preleveling.

5-04.5 Payment

(December 12, 2025 APWA GSP)

Payment will be made for each of the following Bid items that are included in the Proposal:

"HMA Cl. ___ PG ___", per ton.
"HMA for Approach Cl. ___ PG ___", per ton.
"HMA for Preleveling Cl. ___ PG ___", per ton.
"HMA for Pavement Repair Cl. ___ PG ___", per ton.
"Commercial HMA", per ton.
The unit Contract price per ton for "HMA Cl. ___ PG ___", "HMA for Approach Cl. ___ PG ___", "HMA for Preleveling Cl. ___ PG ___", "HMA for Pavement Repair Cl. ___ PG ___", and "Commercial HMA" shall be full compensation for all costs, including anti-stripping additive, incurred to carry out the requirements of Section 5-04 except for those costs included in other items which are included in this Subsection and which are included in the Proposal.

"Pavement Repair Excavation Incl. Haul", per square yard.
The unit Contract price per square yard for "Pavement Repair Excavation Incl. Haul" shall be full payment for all costs incurred to perform the Work described in Section 5-04.3(4) with the exception, however, that all costs involved in the placement of HMA shall be included in the unit Contract price per ton for "HMA for Pavement Repair Cl. ___ PG ___", per ton.

"Planing Bituminous Pavement", per square yard.
The unit Contract price per square yard for "Planing Bituminous Pavement" shall be full payment for all costs incurred to perform the Work described in Section 5-04.3(14).

"Job Mix Compliance Price Adjustment", by calculation.
"Job Mix Compliance Price Adjustment" will be calculated and paid for as described in Section 5-04.3(9)C6.

"Compaction Price Adjustment", by calculation.
"Compaction Price Adjustment" will be calculated and paid for as described in Section 5-04.3(10)D3.

"Roadway Core", per each.
The Contractor's costs for all Work associated with the coring (e.g., traffic control) shall be incidental and included in the unit Bid price per each.

"Cyclic Density Price Adjustment", by calculation.
"Cyclic Density Price Adjustment" will be calculated and paid for as described in Section 5-04.3(10)B.

5-04.5 Payment
(March 2, 2026 MLT GSP)
Section 5-04.5 is supplemented with the following:

"Commercial HMA for Pavement Repair Class ½" PG 58H-22 Incl. Excavation and Haul" per ton.

The unit contract price per ton for installing "Commercial HMA for Pavement Repair Class ½" PG 58H-22 Incl. Excavation and Haul" shall be full compensation for all labor, tools, and materials required for loading, hauling, placing, compacting HMA pavement, and includes "Anti-Stripping Additive," "Tack Coat", "Soil Residual Herbicide", top sealing all cold joints with AR-4000 (and sand blanket to alleviate tracking), saw cutting existing pavement, excavating and disposing of existing pavement, existing base and native material for installation new base, hauling, waste fee, compacting base and sub-base materials and other work to install HMA pavement repair per the plans and specifications. The contract price shall also include all costs related to testing HMA validated mix designs submitted to the Engineer for review and approval (which show the validated anti-strip additive in HMA, validated anti-strip additive in asphalt oil binder, or oil binder content), including lab fees and HMA density cores to establish Contractor's nuclear gauge density correlation factor (aka HMA density cores for establishing gauge correlation factor). No additional payment will be made for pavement repair.

"Planing Bituminous Pavement", per square yard.

The unit contract price bid per square yard for "Planing Bituminous Pavement" shall be full pay for all work required to plane existing asphalt concrete to the depths specified, including mobilizing, operating, and demobilizing all necessary equipment, tie-ins to existing roads, around castings, and adjusting depth to suit existing curbs. It shall also include loading, waste hauling and disposing the grindings. Removal of existing asphalt concrete from gutter pans and removal of all pavement markings within the area to be planed shall be included in this bis item, regardless of the method of removal. No additional payment will be made for planing the existing asphalt concrete.

"HMA Class ½" PG 58V-22", per ton.

The unit contract price per ton for "HMA Class ½" PG 58V-22" shall be full compensation for all labor, tool, and materials required for loading, hauling, placing, feathering, and compacting HMA pavement, and includes "Anti-Stripping Additive", "Tack Coat", "Soil Residual Herbicide", top sealing all cold joints with AR-4000 (and sand blanket to alleviate tracking), and all other work necessary for a complete paving system as shown on the plans and specifications. The payment for the HMA preleveling shall be under this bid item. No additional payment will be made for installing HMA Class ½" PG 58V-22.

The payment for Crushed Surfacing Top Course shall be paid under Section 4-04.5 of these Specifications.

This item will also be used for payment of commercial HMA for temporary pavement patching and will include the removal and disposal of the temporary patch. See Section 5-07 of these Special Provisions.

5-04.5 Payment

(January 13, 2021 WSDOT GSP, Option 2 and June 15, 2023 MLT GSP as underlined)

Section 5-04.5 is supplemented with the following:

Asphalt Cost Price Adjustment

The Contracting Agency will make an Asphalt Cost Price Adjustment, either a credit or a payment, for qualifying changes in the reference cost of asphalt binder. The adjustment will be applied to partial payments made according to Section 1-09.9 for the following bid items when they are included in the proposal:

"HMA Cl. ___ PG ___"
"HMA for Approach Cl. ___ PG ___"
"HMA for Preleveling Cl. ___ PG ___"
"HMA for Pavement Repair Cl. ___ PG ___"
"Commercial HMA"

<u>"HMA Class ½" PG 58V-22"</u>
<u>"Commercial HMA for Pavement Repair Class ½" PG 58H-22 Incl. Excavation and Haul"</u>

The adjustment is not a guarantee of full compensation for changes in the cost of asphalt binder. The Contracting Agency does not guarantee that asphalt binder will be available at the reference cost.

The Contracting Agency will establish asphalt binder reference costs twice each month and post the information on the Agency website at: https://wsdot.wa.gov/business-wsdot/contracts/about-public-works-contracts/payments-reporting/asphalt-binder-reference-cost. The reference cost will be determined using posted prices furnished by Poten & Partners, Inc. If the selected price source ceases to be available for any reason, then the Contracting Agency will select a substitute price source to establish the reference cost.

Price adjustments will be calculated one time per month. No price adjustment will be made if the Current Reference Cost is within +/-5% of the Base Cost. Reference costs for projects located in Eastern versus Western Washington shall be selected from the column in the WSDOT website table labeled "Eastern", or "Western", accordingly. The adjustment will be calculated as follows:

If the reference cost is greater than or equal to 105% of the base cost, then Asphalt Cost Price Adjustment = (Current Reference Cost – (1.05 x Base Cost)) x (Q x 0.056).

If the reference cost is less than or equal to 95% of the base cost, then Asphalt Cost Price Adjustment = (Current Reference Cost – (0.95 x Base Cost)) x (Q x 0.056).

Where: **Current Reference Cost** is selected from the website table based on the "Date Effective" that immediately precedes the current month's progress estimate end date. For work completed after all authorized working days are used, the adjustment will be based on the posted reference cost during which contract time was exhausted.

Base Cost is selected from the website table based on the "Date Effective" that immediately precedes the contract bid opening date, and shall be a constant for all monthly adjustments.

Q = total tons of all classes of HMA paid in the current month's progress payment.

"Asphalt Cost Price Adjustment", by calculation.

"Asphalt Cost Price Adjustment" will be calculated and paid for as described in this section. For the purpose of providing a common proposal for all bidders, the Contracting Agency has entered an amount in the proposal to become a part of the total bid by the Contractor.

Add the following new section:

5-06 PAVEMENT REPAIR MEMBRANE (New Section)

(October 15, 2025 MLT GSP)

5-06.1 Description

This work shall consist of installing a pavement repair membrane on existing roads where shown on the plans and as directed by the Engineer.

5-06.2 Materials

The pavement repair membrane shall be non-woven paving fabric with a rubberized asphalt coating and tackifier to allow for peal and stick application by hand. The pavement repair membrane shall meet the following requirements:

Property	Test Method	Units	Value[1]
Strip tensile	ASTM D 882[2]	Lb/in	50
Puncture resistance	ASTM E 154	Lb	200
Permeance	AMTM E 96 Method B	Perms	0.10 (max)
Pliability	ASTM D 146[3]	N/A	No cracks in fabric or rubberized asphalt

The pavement repair membrane shall have the following dimensions:

Dimensions & Weights		
Width (ft)	Length (ft)	Gross weight (lbs)
1	108	45
1.5	108	66
2	108	88
3	45	53

5-06.3 Construction Requirements

The pavement repair membrane shall be installed per the manufacturer's requirements and recommendations.

5-06.4 Measurement

Pavement repair membrane shall be measured per square yard of pavement surface where the membrane is installed.

5-06.5 Payment

"Pavement Repair Membrane", per square yard.

The unit contract price per square yard for installing "Pavement Repair Membrane" shall be full compensation for all labor, tools, materials, loading, hauling, placing, filling existing pavement cracks with AR-4000, applying prime coats, and thoroughly cleaning the existing pavement surface of dirt, dust, water, vegetation and other foreign material prior to installation.

Add the following new section:

5-07 TEMPORARY PAVEMENT PATCHING *(New Section)*

(March 2, 2026 MLT GSP)

5-07.1 Description

This work consists of installing temporary pavement patches with Commercial HMA or asphalt treated base (ATB) as shown in the Plans and Specifications or established by the Engineer. The temporary patches shall be maintained during construction by the Contractor. This work may also consist of installing temporary pedestrian ramps.

5-07.2 Materials

HMA used for temporary pavement patches, utility trench patches, and/or temporary ADA ramps shall be Commercial HMA or ATB. The HMA used for walkways and driveways shall be Commercial HMA.

Materials for pavement patching shall be Commercial HMA per Section 5-04 of the Standard Specifications.

The ATB for pavement patching shall be per Section 4-06 Asphalt Treated Base (ATB) of the Special Provisions.

5-07.3 Construction Requirements

Asphalt shall not be stockpiled at the site.

The temporary patches shall be maintained during construction by the Contractor.

Commercial HMA and ATB installed for temporary purposes shall be removed before final paving.

5-07.4 Measurement

Commercial HMA or asphalt treated base for temporary patch will be measured per ton.

5-07.5 Payment

"Commercial HMA or Asphalt Treated Base for Temporary Patch", per ton.

The unit contract price per ton for "Commercial HMA or Asphalt Treated Base for Temporary Patch" shall be full compensation for this item, including furnishing, installing, compacting, maintenance, removal, and disposal at an approved waste site.

END OF DIVISION 5

DIVISION 7 – DRAINAGE STRUCTURES, STORM SEWERS, SANITARY SEWERS, WATER MAINS AND CONDUITS

7-05 MANHOLES, INLETS, CATCH BASINS, AND DRYWELLS

7-05.1 Description

(October 15, 2015 MLT GSP)

Section 7-05.1 is supplemented with the following:

The work shall consist of raising or lowering existing utility castings and structures to allow the work to progress and to match the finished grade of the completed paving including reusing or removing and disposing of existing frames, grates, rings and covers, installing new concrete risers, and bolt down locking frames and grates and rings and covers.

7-05.2 Materials

(July 5, 2023 MLT GSP)

Section 7-05.2 is supplemented with the following:

Circular Frame (Ring) and Cover

Materials shall meet the requirements for Circular Frame (Ring) and Locking Cover with Pick Bar per City of Mountlake Terrace Engineering Details & Specifications Drawing No. 616. The lettering shall be specified as either "STORM", "SEWER", or "WATER" as appropriate.

Vented Frame

Vented Frames shall be an ERGO 6-inch frame SS Cam Lock HD GRT type.

Rectangular Frame and Grate

Rectangular Frames and Grates where specified on the plans shall be the type shown on WSDOT Standard plans B-30.10-03 and B-30.30-03.

Conversion Risers

Materials shall be prefabricated and meet the requirements of Section 9-05.50.

7-05.3 Construction Requirements

(March 15, 2021 MLT GSP)

Section 7-05.3 is supplemented with the following:

Sand collars, flexible transition couplings or equal and approved by the Engineer are required on all PVC pipe connections and concrete catch basins.

Where shown on the Plans, remove and dispose of existing adjustment brick, frames,

grates, lids, rings and covers, and install new concrete riser sections, as necessary, adjustment brick and new frames, grates, lids, rings and covers of the types indicated.

Where specified, the grates, lids, and covers shall be locking. The new frames, grates, lids, rings and covers shall conform to the details on the Plans, the City of Mountlake Terrace Standards, and Section 9-05.15 of the Standard Specifications.

The Contractor shall also verify invert elevations of existing catch basins that will be connected to the new drainage system. Discrepancies from the plans shall be reported to the Engineer. Following field verification, the Contractor may procure the drainage structures using the invert information as determined in the field.

7-05.3(1) Adjusting Manholes and Catch Basins to Grade

(March 15, 2021 MLT GSP)

Section 7-05.3(1) is supplemented with the following:

Castings and structures shall not be adjusted to the finished grade until the final pavement is completed, at which time the center of each structure shall be located from references previously established by the Contractor.

Where castings are above or near the finished grade of the asphalt prior to final paving, the castings shall be adjusted to a lower elevation, or temporarily removed and replaced with metal plates.

The existing asphalt concrete pavement (ACP) shall be cut and removed to a neat circle, the diameter of which shall be equal to the outside diameter of the frame or ring plus 1 foot.

The completed patch shall match the existing paved surface for texture, density, and uniformity of grade. The top surface of the joint between the patch and the existing pavement shall then be painted with AR-4000 grade bitumen asphalt and shall be immediately covered with dry paving sand before the asphalt cement solidifies.

See Special Provisions 1-05.14 and 1-07.17 for adjustments of franchise utility structures.

Add the following new section:

7-05.3(5) Connection to Drainage Structure ***(New Section)***

(July 5, 2023 MLT GSP)

The locations, type, and size of the existing catch basins and storm lines have been determined from available records, and are approximate; however, it is anticipated that connections to these existing facilities may be made, in general, as shown on the Plans.
It shall be the responsibility of the Contractor to determine the exact location, type, and size of the existing facilities prior to starting work on each connection, and to provide any alterations, as required at no additional cost to the City.

The Contractor shall clean (per the requirements of Section 7-07.3) and re-grout existing manholes and catch basins at structures where connections are made.

When connecting to a structure, openings must be core drilled, unless an existing knockout is available. Connections shall be made with watertight rubber boots, sand collars, manhole adapter, or other approved watertight connections, except for concrete, ductile iron or corrugated metal pipe. For concrete, ductile iron, or corrugated metal pipe the connections shall be made with non-shrink Portland cement grout to make a watertight fit.

Add the following new section:

7-05.3(6) Connection to Existing Pipe ***(New Section)***

(December 17, 2015 MLT GSP)

The location, type and size of existing storm sewer pipe has been determined from available records and are approximate. However, it is anticipated that connection may be made, in general, as shown on the Plans.

It shall be the responsibility of the Contractor to determine the exact location, type, and size of the existing facilities prior to starting work on each connection, and to provide any alterations, as required.

Connect existing pipe to a new concrete structure using a knockout, if available, or by core drilling the structure. Connections shall be made with watertight rubber boots, sand collars, manhole adapter, or other approved watertight connections, except for concrete, ductile iron or corrugated metal pipe. For concrete, ductile iron, or corrugated metal pipe the connections shall be made with non-shrink Portland cement grout to make a watertight fit.

7-05.4 Measurement

(March 2, 2026 MLT GSP)

Section 7-05.4 is supplemented with the following:

"New Rectangular Frame and Locking Vaned Grate, and Adjust to Finished Grade" shall be measured per each.

"Adjust Catch Basin Type 2 with Circular Frame and Locking Solid Cover with "STORM DRAIN" Lettering to Finished Grade" shall be measured per each.

"New Circular Frame and Locking Solid Cover with "SEWER" Lettering, and Adjust to Finished Grade" shall be measured per each.

7-05.5 Payment

(March 2, 2026 MLT GSP)

Section 7-05.5 is supplemented with the following:

"New Rectangular Frame and Locking Vaned Grate, and Adjust to Finished Grade" per each.

The unit contract price per each for "New Rectangular Frame and Locking Vaned Grate, and Adjust to Finished Grade" will be full compensation for all labor, materials, tools, and equipment necessary to complete the work, including lowering castings prior to paving, adjusting castings to finished grade after overlay paving per Section 7-05.3(1) of the Special Provisions, removing and disposing of the existing frame and grate, and providing and installing a new rectangular frame (ring) and locking grate.

" Adjust Catch Basin Type 2 with Circular Frame and Locking Solid Cover with "STORM DRAIN" Lettering to Finished Grade", per each.

The unit contract price per each for "Adjust Catch Basin Type 2 with Circular Frame and Locking Solid Cover with "STORM DRAIN" Lettering to Finished Grade" will be full compensation for all labor, materials, tools, and equipment necessary to complete the work, including lowering castings prior to paving and adjusting castings to finished grade after overlay paving per Section 7-05.3(1) of the Special Provisions.

"New Circular Frame and Locking Solid Cover with "SEWER" Lettering, and Adjust to Finished Grade" per each.

The unit contract price per each for "New Circular Frame and Locking Solid Cover with "SEWER" Lettering, and Adjust to Finished Grade" will be full compensation for all labor, materials, tools, and equipment necessary to complete the work, including lowering castings prior to paving, adjusting castings to finished grade after overlay paving per Section 7-05.3(1) of the Special Provisions, removing and disposing of the existing ring and cover, and providing and installing a new circular frame (ring) and locking cover.

7-08 GENERAL PIPE INSTALLATION REQUIREMENTS

7-08.2 Materials

(March 2, 2026 MLT GSP)

Section 7-08.2 is supplemented with the following:

Materials shall meet the requirements of the following sections:

Flexible Couplings for connecting storm system pipes shall meet the following requirements of ASTM C1173 and ASTM D5926.

Pipe Bedding	SS 9-03.9(3)	Crushed Surfacing Top Course
Gravel Borrow for Trench Backfill	SS 9-03.14(1)	Gravel Borrow
Foundation Materials Class A	SS 9-03.9(2)	Permeable Ballast

Straight ductile iron couplings for storm and sanitary sewer main connections of dissimilar pipe shall meet the requirements of AWWA C219. The couplings end and center rings

shall be ductile iron meeting or exceeding ASTM A536. Gaskets shall be Styrene Butadine Rubber compounded for water and sewer service in accordance with ASTM D 2000 MBA 710.

7-08.3 Construction Requirements

7-08.3(1) Excavation and Preparation of Trench

7-08.3(1)B Shoring

(September 30, 2021 MLT GSP)

Section 7-08.3(1)B is supplemented with the following:

Extra excavation shall not be allowed in lieu of shoring except as authorized by the Engineer.

7-08.3(2) Laying Pipe

7-08.3(2)G Jointing of Dissimilar Pipe

(March 12, 2013 MLT GSP)

Section 7-08.3(2)G is supplemented with the following:

Contractor shall connect pipe to manhole and/or catch basin by use of a factory fabricated adapter coupling and pipe collar as shown in the plans. Whether or not shown on the plans, all dissimilar pipes shall be joined by use of a flexible rubber transition coupling with stainless steel shear bands.

7-08.3(3) Backfilling

(August 15, 2025 MLT GSP)

Section 7-08.3(3) is supplemented with the following:

The import material for utility trench backfill shall be Gravel Borrow. If native material is suitable for backfilling the trench, the contractor shall backfill the trench with native material when directed by the Engineer.

Add the following new section:

7-08.3(5) Pipe Crossing Existing Utilities *(New Section)*

(March 2, 2026 MLT GSP)

Where new pipes cross existing utilities with less than 12 inches clearance, an Ethafoam pad is required for installations where other utilities are closer than 12 inches to provide additional protection between the adjacent utilities. The size of the pad shall be based on the outside diameter (O.D.) of the larger crossing pipe. The pad shall be O.D. long by O.D. wide by 2.5 inches thick minimum or as required to protect the pipes. The pad shall be a strong, resilient, medium-density, closed-cell, polyethylene foam plank (Dow Ethafoam

220, or approved equivalent.). The cushion shall be included in the unit contract prices for water mains and no additional compensation will be allowed.

At crossings of PSE natural gas pipelines, sand bedding 4 inches under and sand shading 6 inches around and over PSE Pipe shall be placed in accordance with PSE standards set forth under PSE's Form 3061 "Gas and Electric Underground Service Installation Requirements".

Add the following new section:

7-08.3(6) Existing Side Sewers ***(New Section)***

(March 15, 2021 MLT GSP)

The Contractor shall anticipate the potential for crossing over or under an occasional shallow existing side sewer that is not part of the one-call utility locate. Side sewers are not shown on the plans. If such a side sewer is encountered, the Contractor shall immediately notify the Contracting Agency. If a side sewer is damaged by construction activity, the Contractor is responsible for repairing the side sewer.

7-08.4 Measurement

(August 15, 2025 MLT GSP)

Section 7-08.4 is supplemented with the following:

"Gravel Borrow Incl. Haul for Water and Sewer" shall be measured per ton.
"Foundation Materials Class A Incl. Haul for Water and Sewer" shall be measured per ton.
"Trench Safety and Shoring or Extra Excavation Class A and Class B for Water and Sewer" shall be measured per lump sum.

7-08.5 Payment

(March 2, 2026 MLT GSP)

Section 7-08.5 is supplemented with the following:

"Gravel Borrow Incl. Haul for Water and Sewer", per ton.

The unit price for "Gravel Borrow Incl. Haul for Water and Sewer" shall include all costs for the labor, materials, and equipment to complete the work, including furnishing and placing the material and excavating, hauling and disposing of unsuitable backfill material necessary to install the Gravel Borrow. Structure excavation, backfilling, and compaction shall be included in the unit contract prices per foot for the various types and sizes of pipe being installed.

"Foundation Materials Class A Incl. Haul for Water and Sewer", per ton.

The unit price per ton for "Foundation Material Class A for Water and Sewer" shall include all costs for the labor, materials, and equipment to complete the work, including furnishing, placing, and compacting the materials; excavating, hauling, and disposing of unsuitable

foundation material necessary to install the Permeable Ballast in trenches; and any waste fees.

"Trench Safety and Shoring or Extra Excavation Class A and Class B for Water and Sewer", per lump sum.

The lump sum contract price for "Trench Safety and Shoring or Extra Excavation Class A and Class B for Water and Sewer" shall include all costs for the labor, materials, and equipment to complete the work, including hauling, installing, and removal of shoring boxes and trench safety equipment during construction (including but not limited to temporarily placing H-20 rated steel plates over excavations and trenches during non-working hours). No additional/extra payment shall be made for the different types of trench safety equipment, shoring boxes, shoring box sizes, different shoring depths, and/or different type of shoring methods.

7-09 WATER MAINS

7-09.1 Description

(August 15, 2025 MLT GSP)

Section 7-09.1 is supplemented with the following:

The work consists of installing Class 52 ductile iron pipes for water mains including, tees, crosses, bends, sleeves and concrete thrust blocks as shown on the plans and profiles. The work also includes temporarily capping of existing water mains with temporary blocking, testing, and flushing to maintain water customer service during the construction of new water mains.

7-09.2 Materials

(September 30, 2021 MLT GSP)

Section 7-09.2 is supplemented with the following:

Ductile iron pipe shall be Class 52. Ductile iron fittings shall be Class 350.

The locate conductor wire shall be 12-gauge stranded copper conductor. Insulation shall be Type USE Chemically Cross Linked Polyethylene or type UF, and shall be listed by a Nationally Recognized Testing Laboratory. Conductor wires shall be spliced with a direct bury splice kit using a copper H-Tap or copper C-Tap connector encased with heat-shrinkable insulating tubing or a waterproof polypropylene tube filled with a silicone electrical insulating gel accordance with WSDOT Std Spec 9-15.17.

7-09.3 Construction Requirements

7-09.3(13) Handling of Pipe

(June 11, 2024 MLT GSP)

Section 7-09.3(13) is supplemented with the following:

The stringing of pipe is prohibited. The Contractor shall only lay out that length of pipe that will be installed during that day's work shift. No pipe shall be temporary placed where it will prohibit access to any driveway in anyway, except where the trenching is directly in front of a driveway.

7-09.3(19) Connections

7-09.3(19)A Connections to Existing Mains

(September 30, 2021 MLT GSP)

Section 7-09.3(19)A is supplemented with the following:

No permanent connections to the existing system shall be made until the new water main has been tested, disinfected, flushed, and approved by the Engineer. No temporary connections of the untested, unapproved new water main to the existing system shall be made without the installation of a double check valve assembly between the new water main and existing system. The Contractor shall verify the size, material, and location of the existing main at the connection point prior to installing the new connecting water main.

7-09.3(19)B Maintaining Service

(July 5, 2023 MLT GSP)

Section 7-09.3(19)B is replaced with the following:

Water service shall be maintained as described on the construction plans and as follows:

The Contractor is required to notify the City two working days prior to any planned connection to an existing water main. The City will be responsible for all tasks involved with shut-off and turn-on of the existing water mains. Unless otherwise directed by the Engineer, the Contractor shall not operate existing water system valves. The City will determine the extent of the affected customers. The Contracting Agency will notify the owners and tenants of affected properties of water main shut downs. The Contractor shall be responsible for notifying affected owners and tenants of affected properties of service interruptions necessary for water service transfers. Also see Sections 1-05.19, Notifications Relative to Contractor's Activities, in these Special Provisions.

Prior to commencement of any work on a connection to an existing water main, the Contractor will assemble all materials, equipment, and labor necessary to properly complete the work. Once the water has been shut off, the Contractor shall have one working day to complete the connection. All connections to existing water mains shall be completed the same day that they are started. The Contractor shall time their operations so that the water will not be shut off over weekends, or during holidays. Water shall not be shut off earlier than 9:00 AM and must be turned back on no later than 4:00 PM the same day.

7-09.3(21) Concrete Thrust Blocking

(June 11, 2024 MLT GSP)

Section 7-09.3(21) is supplemented with the following:

The Contractor shall provide concrete blocking at all tees and fittings, and horizontal or vertical angle points. Blocking shall conform to City of Mountlake Terrace standard details for blocking. All fittings to be blocked shall be wrapped with 8-mil polyethylene plastic. Concrete blocking shall be properly formed with plywood or other acceptable forming materials and shall not be poured around joints. The forms shall be stripped prior to backfilling. Concrete shall be Class 3000.

All fittings shall be rigidly restrained with Mega-Lugs (or approved equal) and concrete thrust blocks. If concrete thrust blocks will not be fully cured at the time the new main is pressurized all the bends must have temporary "kickers" in place before the main will be re-charged.

Add the following new section:

7-09.3(25) Abandon Existing Water Main ***(New Section)***

(August 15, 2013 MLT GSP)

The existing water mains to be abandoned shall be plugged per Section 7-08.3(4) of the Standard Specifications.

Add the following new section:

7-09.3(26) Temporary Water System Configuration ***(New Section)***

(March 2, 2026 MLT GSP)

To maintain existing water service, the contractor shall cut and temporarily cap some existing water mains prior to installing the proposed water main pipe on 228th Street SW. The contractor shall install temporary blowoffs (with concrete thrust blocks) for flushing. The contractor shall coordinate with the Project Engineer and Public Works Supervisor 10 working days in advance so City personnel can close the gate valves prior to the Contactor cutting the existing water mains.

The Contractor shall cut and temporarily cap the existing water mains at the following locations.

a. Approx. STA. 2+57B, 2' LT. on Drawing No. C-4.
b. Approx. STA. 2+57B, 20' LT. on Drawing No. C-4.
c. Approx. STA. 3+17B, 20' LT. on Drawing No. C-4.

All costs associated with cutting and temporarily capping existing water mains including installing temporary blowoffs (with concrete thrust blocks) for maintaining water services shall be considered incidental to the water main installation.

The actual locations, configurations, and depths of the existing water mains near the existing PRV station (near 228th Street SW / 68th Place W intersection from STA. 0+00B to STA. 3+50B) are unknown and are shown approximately in the Plans. The Contractor shall confirm the locations, configurations, depths, and alignments of the water mains in this area, as needed for this project. The Contractor is responsible for adjusting the construction sequence and materials as needed based on their findings. Adjustments needed based on the actual water main configuration in this area shall not be grounds for a change order.

7-09.4 Measurement

(August 15, 2025 MLT GSP)

Section 7-09.4 is supplemented with the following:

"Ductile Iron Pipe for Water Main, Class 52, _____ Inch Diam." will be measured per linear foot.

"Cut and Cap Existing Water Main" shall be measured per each.

7-09.5 Payment

(March 2, 2026 MLT GSP)

Section 7-09.5 is supplemented with the following:

"Ductile Iron Pipe for Water Main, Class 52, 8 Inch Diam.", per linear foot.

"Ductile Iron Pipe for Water Main, Class 52, 12 Inch Diam.", per linear foot.

The unit contract price per linear foot for installing "Ductile Iron Pipe for Water Main, Class 52, _____ Inch Diam." shall be full compensation for all labor, equipment, materials, and tools to accomplish the work, including bolted restraint systems, gaskets, tees, bends, crosses, and other fittings; bolts, nuts, and gaskets for connecting proposed water mains to existing water mains; permanent thrust blocking; excavation; cutting existing water mains; placement and compaction of pipe bedding; laying pipe; furnishing and placing sand bedding 4 inches under and sand shading 6 inches around and over any PSE gas utility crossings in accordance with PSE standards set forth under PSE's Form 3061 "Gas and Electric Underground Service Installation Requirements" and City of Mountlake Terrace Engineering Details & Specifications Drawing No. 617 "Gas Crossing in Vicinity of Public Utilities"; dewatering; temporary caps, plugs, blowoff, and thrust blocking; backfilling and compaction of native or import materials; hauling and disposal of displaced material; locate wires including copper splice connectors, detectable warning tape; pipe sterilization; dechlorination; pipe flushing; testing; removing debris; clean up; and removing and disposing of existing pipe and fittings. The payment shall also include potholing to verify existing pipe depth, location, size, and fittings as necessary for laying the proposed pipe and connecting proposed water mains to existing water mains.

"Cut and Cap Existing Water Main", per each.

The unit contract price per each for "Cut and Cap Existing Water Main" shall be full

compensation for all labor, equipment, materials, and tools to accomplish the work, including mechanical joint (MJ) plugs, blind flanges, concrete thrust blocks, excavation, cutting into existing water mains, dewatering, capping existing water mains, potholing to verify pipe size and fittings, removal and disposal of existing piping and fittings, backfill material and compaction, hauling and disposal of displaced material, pipe sterilization, dechlorination, pipe flushing, testing, and clean up. The following are the locations identified for the "Cut and Cap Existing Water Main" bid item.

1. Capping existing 8 Inch diameter main at 226th Place SW and 70th Avenue W intersection. Approx. STA. 2+07, 14' RT. on Drawing No. C-1.
2. Capping existing 8 Inch diameter main at the east end of the Andorra North Apartments. Approx. STA. 1+20B, 6' RT. on Drawing No. C-4.
3. Capping existing 8 Inch diameter main at 228th Street SW and 66th Avenue W intersection. Approx. STA. 8+ 47B, 24' RT on Drawing No. C-5.
4. Capping existing 6 Inch diameter main at 228th Street SW and 66th Avenue W intersection. Approx. STA. 8+48B, 22' LT. on Drawing No. C-5.

7-12 VALVES FOR WATER MAINS

7-12.1 Description

(August 15, 2025 MLT GSP)

Section 7-12.1 is supplemented with the following:

The work consists of replacing a combination air release/air vacuum valve assembly, gate valves assemblies, and a pressure reducing valve (PRV) assembly as shown on the plans.

7-12.2 Materials

(September 30, 2021 MLT GSP)

Section 7-12.2 is supplemented with the following:

Gate valves shall be resilient wedge type UL/FM approved, fusion bonded epoxy coated body and bonnet, ductile iron body, wedge fully encapsulated with rubber, non-rising stem, operating stems equipped with standard 2-inch operation nut, and O-ring stem seals, suitable for installation with the type and class of pipe being installed. Ends shall be as specified. Valve opening direction shall be counterclockwise. The gate valves shall be as manufactured by Mueller.

Tapping sleeves and valve assembly shall be split sleeve, mechanical joint, ductile iron.

7-12.3 Construction Requirements

(July 5, 2023 MLT GSP)

Section 7-12.3 is supplemented with the following:

New and existing water valve chamber covers shall be adjusted per the City of Mountlake Terrace Engineering Details & Specifications Drawing No. 614.

7-12.4 Measurement

(March 2, 2026 MLT GSP)

Section 7-12.4 is supplemented with the following:

"Gate Valve, _____ Inch" will be measured per each.
"Combination Air Release/Air Vacuum Valve Assembly, 1 Inch" will be measured per each.
"Pressure Reducing Valve (PRV) Assembly" will be measured per each.
"Abandon Existing Pressure Reducing Valve (PRV) Assembly" will be measured per each.
"Adjust Existing Valve Box Case and Cover to Finished Grade" will be measured per each.

7-12.5 Payment

(March 2, 2026 MLT GSP)

Section 7-12.5 is supplemented with the following:

Payment will be made for the following bid item(s):

"Gate Valve, 6 Inch", per each.
"Gate Valve, 8 Inch", per each.
"Gate Valve, 12 Inch", per each.

The unit contract price per each for installing "Gate Valve, _____ Inch" shall be full compensation for all labor, equipment, tools, and materials to accomplish the work, including furnishing and installing the gate valve, valve box, and nut extension; excavation; disinfection; hydrostatic testing; jointing; thrust blocking of valve; disposal of displaced material; placement and compaction of pipe bedding; and including backfilling and compaction of native or import materials; adjusting valve box to grade; and cleanup.

"Combination Air Release/Air Vacuum Valve Assembly, 1 Inch", per each.

The unit contract price per each for installing "Combination Air Release/Air Vacuum Valve Assembly, 1 Inch" shall be full compensation for all labor, equipment, tools, and material to accomplish the work, including furnishing and installing the combination air release/air vacuum valve assembly and valve box; connecting the valve and piping to the water main; excavation; disposal of displaced material; placement and compaction of pipe bedding; backfilling and compaction of native or import materials; testing; adjusting valve box to finished grade; and cleanup. All work for combination air release/air vacuum valve assemblies shall be in conformance with City of Mountlake Terrace Engineering Details & Specifications Drawing No. 234. No additional payment shall be made for installing the combination air release/air vacuum valve assembly.

"Pressure Reducing Valve (PRV) Assembly", per each.

The unit contract price per each for "Pressure Reducing Valve (PRV) Assembly" shall be

full compensation for all labor, equipment, tools, and materials to install the proposed PRV station per the plans and specifications, including excavation; hauling and disposing of native soil and unsuitable materials; waste fees; backfilling, subgrade, and compaction (per the plans and specifications, and as directed by the Engineer); and furnishing and installing the PRV vault, circular frame(s) [ring(s)], locking solid cover(s), ladder(s), valving, valve box(es), nut extension(s), pressure gauges, sump pump and associated electrical improvements for installation, Schedule 80 PVC drain piping and fittings, cleanout assembly, electrical plug outlet and switch assembly, anchor bolts, bolts, washers, nuts, treated wood, Unistrut slotted channels, stainless steel pipe clamps, watertight epoxy, coatings, paints, stainless steel plates, stainless shackle rods, rebar, dowels, vault rubber gasket (Kor-N-Seal Boot), and PRVs. The unit contract price shall also include disinfection, hydrostatic testing, configuring the PRV operational settings, training agency staff, pipe jointing, concrete thrust blocks, disposal of displaced material, coring vault walls for pipe and conduit penetrations, concrete riser(s), concrete ring riser(s), adjusting valve box(es) and vault to finished grade, and dewatering during installation as required (or if directed by the Engineer). The unit price shall also include all costs for structural engineering design of the PRV vault, including but not limited to preparing shop drawings and calculations that are stamped by a Structural Engineer. The Structural Engineer shall be licensed in Washington State.

"Abandon Existing Pressure Reducing Valve (PRV) Assembly", per each.

The unit contract price per each for "Abandon Existing Pressure Reducing Valve (PRV) Assembly" shall be full compensation for all labor, equipment, tools, and materials to abandon the existing PRV station per the plans and specifications, including excavation; hauling and disposing of native soil and unsuitable materials; waste fees; backfilling and compaction (per the plans and specifications, and as directed by the Engineer); and cutting, removing, and disposing of the existing concrete top of the PRV vault, vault frame and cover, vault ladder, and all mechanical piping and valves. The unit contract price shall also include filling the existing vault that remains (from the bottom to the top of the vault) with lightweight backfill (expanded polystyrene [EPS] "Geofoam" in conformance with Section 8-33 of these Special Provisions"), installing an 18-inch thick layer of topsoil Type A on top of the lightweight backfill, cutting existing pipes, plugging existing pipes with commercial concrete, capping existing pipes with MJ caps and/or blind flanges, and dewatering during construction as required (or if directed by the Engineer). No additional payment shall be made for abandoning the existing PRV station.

"Adjust Existing Valve Box Case and Cover to Finished Grade", per each.

The unit Contract price for "Adjust Existing Valve Box Case and Cover to Finished Grade" shall be full payment for all equipment, tools, labor, and materials necessary to adjust the existing water valve boxes and vaults to finished grade, including but not limited to adjustment rings, risers, pipe, crushed surfacing base or top course, controlled density fill (CDF), grout, asphalt pavement, and edge sealant.

All costs for interim adjustments of structures required throughout out construction shall

be in included in the unit Contract price for the item(s) being adjusted.

7-14 HYDRANTS

7-14.1 Description

(April 30, 2025 MLT GSP)
Section 7-14.1 is supplemented with the following:

The work also includes removing and disposal of existing hydrant assemblies and installing new hydrant assemblies.

7-14.2 Materials

(December 19, 2015 MLT GSP)
Section 7-14.2 is supplemented with the following:

One Type 2BB (blue) Raised Pavement Marker shall be installed at all fire hydrant locations. RPM shall comply with Standard Specification Section 9-21.2. RPMs shall be installed using approved material per Standard Specification Section 8-09.2

7-14.3 Construction Requirements

Add the following new section:

7-14.3(7) Salvage of Removed Hydrants (New Section)

(March 2, 2026 MLT GSP)

The specified hydrants being removed shall remain the property of the Contracting Agency.

The Contractor shall transport the specified salvaged hydrants to the location identified in the Plans and Specifications.

The Contractor shall stack the material where directed by the Engineer. The Contractor shall contact the Engineer at least five working days prior to scheduled delivery of the items to confirm delivery arrangements.

7-14.4 Measurement

(April 10, 2025 MLT GSP)
Section 7-14.4 is supplemented with the following:

"Fire Hydrant Assembly" shall be measured per each.
"Remove and Dispose of Existing Fire Hydrant Assembly" shall be measured per each.

7-14.5 Payment

(March 2, 2026 MLT GSP)

Section 7-14.5 is supplemented with the following:

"Fire Hydrant Assembly", per each.

The unit contract price per each for installing "Fire Hydrant Assembly" will be full compensation for all labor, materials, and equipment necessary to complete the work, including furnishing and installing hydrant assemblies, auxiliary gate valves, tee, shackle rods, bolted restrain systems, concrete thrust blocks, 6 In. Diameter Class 52 ductile iron piping that connects the hydrant to the foot valve and water main, washed gravel, and RPM Type BB; excavation; backfilling and compaction of native or import materials; and painting required to accomplish the work. All work for fire hydrant assemblies shall be in conformance with City of Mountlake Terrace Engineering Details & Specifications Drawing No. 251. No additional payment shall be made for installing the fire hydrant assemblies.

"Remove and Dispose of Existing Fire Hydrant Assembly", per each

The unit contract price per each for "Remove and Dispose of Existing Fire Hydrant Assembly" will be full compensation for all labor, materials, tools, and equipment necessary to remove and dispose of existing hydrant assembly, including excavation; removing fire hydrant, auxiliary valve, valve chamber, water main connecting fire hydrant to auxiliary valve and tee, and other materials to be wasted (except where specifically directed otherwise); installing MJ caps and plugs and blind flanges on existing water mains which will remain in service; plugging the existing water mains which will be abandoned with commercial concrete; and backfilling and compaction of native or import materials. The contract price shall also include all labor, equipment, and tools to load, unload, haul and deliver existing hydrant(s) to the City of Mountlake Terrace's Public Works facility as identified in the Plans.

7-15 SERVICE CONNECTIONS

7-15.1 Description

(August 15, 2025 MLT GSP)

Section 7-15.1 is supplemented with the following:

The work consists of installing new copper services from the new water main, relocating meters, and connection to existing water services including furnishing and installing new meter setters and meter boxes as shown on the plans. The work also includes furnishing and transferring existing service pipe connections from residential's building to new mains with new corporation stop, coupling, new copper pipe from back of meter setter to the residential building and other materials as required to accomplish the work.

7-15.2 Materials

(March 2, 2026 MLT GSP)

Section 7-15.2 is supplemented with the following:

Water meter boxes installed in in paved areas (such as a sidewalk, driveway entrance / driveway) shall be Polymer Composite Concrete box with slip-resistant lid cover and shall be per City of Mountlake Terrace Engineering Details & Specifications Drawing Nos. 210 and 211.

7-15.3 Construction Requirements

(August 15, 2025 MLT GSP)

Section 7-15.3 is supplemented with the following:

Before commencing installation of the new services, the Contractor shall submit to the Engineer for approval any boring method they intend to use for installing services under publicly owned pavement. Full street width open trenching will not be allowed unless other methods are unsuccessful, and open trenching is approved by the Engineer.

The plans show approximately the location of the existing services and/or meter box locations. The contractor shall locate the existing water service lines during the installation of the new main. If there are questions regarding the location of existing water services and/or meter boxes, the Contractor shall contact either one of the following:

Project Engineer/Manager	Public Works Supervisor – Water
Roth Seng	Tim Nye
(425) 744-6274 – office	(425) 744-6227 – office
(425) 758-5494 – cell	(425) 238-6558 – cell
rseng@mltwa.gov	TNye@mltwa.gov

All portions of new water services installed in trenches shall be bedded in Backfill for Sand Drains. The minimum bedding thickness shall be 4-inches above and below the service pipe and 4-inches on both sides of the service pipe.

Whether or not shown on the plans and/or the profiles and where the existing meter box on the City Right-Way (ROW), the new copper pipe service connection shall be 5 feet minimum beyond the property line and connect to existing pipe service connection from the residential / commercial building.

The contractor shall connect 1.0 inch service copper pipe from new meter box to existing water ¾" service pipe from the residential / commercial building with straight reducer compression coupling.

7-15.4 Measurement

(March 2, 2026 MLT GSP)

Section 7-15.4 is supplemented with the following:

"_____ Inch Diam. Copper Pipe Service Connection, _____ Side" shall be measured per each. A "long side" service connection is one where the water main is on the opposite side of the centerline for the right of way from the water meter. A "short side" service connection is one where the water main is on the same side of the street as the water meter.

7-15.5 Payment

(March 2, 2026 MLT GSP)

Section 7-15.5 is supplemented with the following:

"1.0 Inch Diam. Copper Pipe Service Connection, Short Side", per each
"1.0 Inch Diam. Copper Pipe Service Connection, Long Side", per each

The unit contract price per each for installing "_____ Inch Diam. Copper Pipe for Service Connection, _____ Side" shall be full compensation for all labor, materials, tools, and equipment necessary to accomplish the work, including providing and installing new fittings, straight compression coupling reducers, meter setters and boxes, straight reducer couplings, copper piping, corporation stops, dielectric fittings as needed, pipe bedding material, and copper piping beyond the property line; tapping the water main; boring under the pavement, driveways, and sidewalks; excavating; laying and jointing the pipes and fittings; connecting from new meter setter to existing services with copper pipe; dewatering if required; backfill and compaction of native or import materials. All work for service connections shall be in accordance with City of Mountlake Terrace Engineering Details & Specifications Drawing Nos. 210 and 211. No additional payment shall be made for installing the service connections.

7-18 SIDE SEWERS

7-18.1 Description

(August 15, 2025 MLT GSP)

Section 7-18.1 is supplemented with the following:

The work shall consist removing of existing sewer lateral pipe (aka side sewer) and installing new solid wall C-900 PVC sewer lateral pipe on the plans.

7-18.4 Measurement

(March 2, 2026 MLT GSP)

Section 7-18.4 is supplemented with the following:

"6 Inch Solid Wall C-900 PVC Sewer Lateral Pipe Incl. Bedding" shall be measured per linear foot.

7-18.5 Payment

(March 2, 2026 MLT GSP)

Section 7-18.5 is supplemented with the following:

"6 Inch Solid Wall C-900 PVC Sewer Lateral Pipe Incl. Bedding", per linear foot.

The unit contract price per linear foot for installing "6 Inch Solid Wall C-900 PVC Sewer Lateral Pipe Incl. Bedding" shall be full compensation for all labor, materials, tools, and equipment necessary to accomplish the work, including excavation, backfill with import or native material as directed the Engineer, backfill compaction, connecting to existing sewer pipes with couplings as specified in the plans and specifications, placement and compaction of pipe bedding, dewatering, loading, hauling, encasing the new sewer pipe with controlled density fill (CDF), polyethylene foam planks, potholing, verifying existing sewer pipe depths and locations, sawcutting, and removing and disposing of existing sewer pipe (including loading, hauling, and waste fees). No additional payment shall be made for installing the sewer lateral pipes.

7-19 SEWER CLEANOUTS

7-19.1 Description

(October 15, 2025 MLT GSP)

Section 7-19.1 is supplemented with the following:

This work shall consist of adjusting sewer cleanout cases and covers to finished grade.

7-19.4 Measurement

(March 2, 2026 MLT GSP)

Section 7-19.4 is supplemented with the following:

"Adjust Sewer Cleanout Box to Finished Grade" will be measured per each.

7-19.5 Payment

(March 2, 2026 MLT GSP)

Section 7-19.5 is supplemented with the following:

"Adjust Sewer Cleanout Box to Finished Grade", per each

The unit contract price per each for "Adjust Sewer Cleanout Box to Finished Grade" shall be full compensation for all labor, tools, equipment, materials necessary to accomplish the work, including excavation, backfill, and compaction required to lower the castings prior to paving and adjust the castings to the finished grade after overlay paving as shown on the plans and according to Section 7-05.3(1) of Special Provisions.

END OF DIVISION 7

DIVISION 8 – MISCELLANEOUS CONSTRUCTION

8-01 EROSION CONTROL AND WATER POLLUTION CONTROL

8-01.3 Construction Requirements

8-01.3(1) General

8-01.3(1)A Submittals

8-01.3(1)A1 Temporary Erosion and Sediment Control Plan

(March 15, 2023 MLT GSP)

Section 8-01.3(1)A1 is supplemented with the following:

The Stormwater Pollution Prevention Plan (SWPPP) is required for this project. The Contractor shall submit Type 2 Working Drawing Plan to the City for reviewing and approval. The Contractor shall use the Department of Ecology's current SWPPP template (available at ecology.wa.gov).

8-02 ROADSIDE RESTORATION

8-02.3 Construction Requirements

8-02.3(1) Responsibility During Construction

(March 2, 2021 MLT GSP)

Section 8-02.3(1) is supplemented with the following:

Dumping or stockpiling of top soil or bark mulch shall not be allowed on roadway surfaces.

8-02.3(6) Mulch and Amendments

8-02.3(6)B Fertilizers

(September 3, 2019 WSDOT GSP Option 3)

Section 8-02.3(6)B is supplemented with the following:

Fertilizer shall be a commercially prepared mix of 10-20-20 and shall be applied at the rate of 10 pounds per 1000 square feet.

8-02.3(9) Seeding, Fertilizing, and Mulching

(Nov 3, 2017 MLT GSP)

Section 8-02.3(9) is supplemented with the following:

Seeding, fertilizing, and mulching shall be installed by an approved type hydroseeder.

8-02.3(9)B Seeding and Fertilizing

(September 3, 2019 WSDOT GSP, Option 2)

Section 8-02.3(9)B is supplemented with the following:

Grass seed shall be a commercially prepared mix, made up of low growing species which will grow without irrigation at the project location, and accepted by the Engineer. The application rate shall be two pounds per 1000 square feet.

8-02.3(9)B Seeding and Fertilizing

(July 5, 2023 MLT GSP)

Section 8-02.3(9)B is supplemented with the following:

Work for slope seeding shall be done as soon as possible after slope construction to ensure slope stabilization. Contractor to coordinate timing with the Engineer.

All areas noted for Slope Seeding shall receive Erosion Control Seed Mix per Section 9-14.3 of these Special Provisions and Moderate Term Mulch per Sections 8-01.3(2) and 9-14.5(2)B of the Standard Specifications.

8-02.3(10) Lawn Installation

8-02.3(10)B Lawn Seeding and Sodding

(July 5, 2023 MLT GSP)

Section 8-02.3(10)B is supplemented with the following:

Hand spreading equipment (aka hand seeding) is not allowed unless otherwise approved by the Engineer in writing at least fifteen (15) working days in advance prior to hand spreading equipment.

The grass seed mix shall conform to Section 9-14.3 of these Special Provisions and 9-14.3 of Standard Specifications.

The seed mixture shall be applied at minimum 1/16 pound per square yard.

The hydroseeding shall be sprayed at a minimum rate of 2000 pounds wood cellulose fiber in hydroseeded lawn per acre. The hydroseeding truck moving speed shall be less than 2 (two) miles per hour or 2.93 feet per second.

Lawn mowing will not be required.

8-02.4 Measurement

(Dec 19, 2015 MLT GSP)

Section 8-02.4 is supplemented with the following:

"Topsoil Type A" will be measured per cubic yard.

8-02.5 Payment

(March 2, 2026 MLT GSP)

Section 8-02.5 is supplemented with the following:

"Topsoil Type A", per cubic yard.

The unit contract price per cubic yard for installing "Topsoil Type A" shall be full pay for providing the source of material, for pre-excavation weed control, excavating, loading, hauling, intermediate windrowing, stockpiling, weed control on stockpiles or windrows, and removal, placing spreading, processing, cultivating, and compacting. The unit contract price shall also include all costs for installing erosion control mats as needed (such as jute mats), seeding and fertilizing the topsoil, and restoration of disturbed areas to existing conditions per the plans and specifications.

8-04 CURBS, GUTTERS, AND SPILLWAYS

8-04.3 Construction Requirements

8-04.3(1) Cement Concrete Curbs, Gutters, and Spillways

(Dec 19, 2015 MLT GSP)

Section 8-04.3(1) is supplemented with the following:

The Contractor shall have the subgrade prepared and the line or formwork for curbs placed at least 24 hours prior to installing curbs. The Engineer shall review the line and grades of the curbs and coordinate with the Contractor to make minor adjustments as necessary. Minor adjustment shall be considered changes to the Plan elevations of 3 inches or less. The work to revise the lines, formwork and subgrade for minor adjustments shall be considered incidental to the bid price for the type of curb being installed. If the lines and formwork are not in conformance with the Plans, all adjustments, regardless of size, shall be at the sole expense of the Contractor. Adjustments to the lines and grades shall not constitute a basis for claims for additional contract time or expenses.

Add the following new section:

8-04.3(3) Pedestrian Curb (New Section)

(July 5, 2023 MLT GSP)

Pedestrian curb shall be constructed per the requirements of Section 8-04.3 and City of Mountlake Terrace Engineering Details & Specifications Drawing No. 134. The pedestrian curb height varies per the heights specified in the plans.

8-13 MONUMENT CASES

8-13.3 Construction Requirements

Add the following new section:

8-13.3(1) Adjust Monument Case and Cover (New Section)

(October 15, 2025 MLT GSP)

This work shall consist of replacing and adjusting survey monument cases and covers to the finished grade of the new work. This work includes adjusting existing survey monument cases to grade in accordance with the details in the Plan and Section 7-05.3(1) of the Special Provisions.

The Contractor shall be responsible for protecting the monuments indicated on the construction plans. If the monuments are disturbed, the Contractor shall reestablish them. All survey work to reestablish monument locations shall be done by a professional land surveyor licensed in the State of Washington at no cost to the Contracting Agency.

8-14 CEMENT CONCRETE SIDEWALKS

8-14.1 Description

(April 10, 2025 MLT GSP)

Section 8-14.1 is supplemented with the following:

The work shall also consist of installing cement concrete sidewalks, sidewalk ramps and detectable warning surface as specified on the plans.

8-14.3 Construction Requirements

8-14.3(3) Placing and Finishing Concrete

(March 16, 2021 MLT GSP)

Section 8-14.3(3) is supplemented with the following:

Cement Concrete Sidewalk

The Contractor shall construct and finish the sidewalk as shown on the Plans, City of Mountlake Terrace Engineering Details & Specifications Drawing No. 131, and as specified in these Special Provisions.

Expansion Joint

Full depth expansion joints for cement concrete sidewalk shall be constructed with a maximum spacing of eighteen (18) linear feet or maximum of one hundred twenty (120) square feet. Dummy joints shall be constructed at a maximum distance of 6 feet from each full depth expansion joint, or as detailed on the Plans.

Expansion joints shall be placed between pedestrian ramps, driveways and match curb and gutter expansion joint spacing. The Contractor shall also place expansion joints as indicated on the plans and in details.

Add the following new section:

8-14.3(6) Curb Ramp Layouts (New Section)

(March 16, 2021 MLT GSP)

Compliance with the United States Access Program Public Right-of-Way Accessibility Guidelines (PROWAG) (current version) is required. Minor modifications to the grades and dimensions shown on the Plans may be required to meet current standards. Prior to pouring concrete at the curb ramp locations, the Contractor shall have each ramp location inspected and receive written approval from the on-site inspector that the forms are set in compliance with ADA Standards. Ramps poured without written approval which do not meet the current ADA standards shall be removed and replaced at the Contractors expense, regardless of whether or not they conform to the dimensions shown on the Plans.

Documentation for Curb Ramps

The Contractor shall perform as-built surveying for all new curb ramps constructed on the project and provide documentation to the Engineer for approval, certifying that all slopes along sidewalks and ramps meet the slope criteria set forth in the Plans or PROWAG (current version) requirements.

8-14.4 Measurement

(March 2, 2026 MLT GSP)

Section 8-14.4 is supplemented with the following:

"Cement Concrete Sidewalk" will be measured per square yard of finished surface and includes the surface area of curb ramps.

8-14.5 Payment

(March 2, 2026 MLT GSP)

Section 8-14.5 is supplemented with the following:

"Cement Concrete Sidewalk", per square yard.

The unit contract bid price per square yard for installing "Cement Concrete Sidewalk" shall be full pay for all labor, materials, tools, and equipment necessary to satisfactorily complete the work as defined in the Plans, Standard Specifications, and these Special Provisions. The "Cement Concrete Sidewalk" pay item includes the sidewalk ramps and landings that comprise the curb ramps and driveways. The pay limits on WSDOT F-40 Series Standard Plans for curb ramps do not apply. The work shall include excavation, hauling, backfill, compaction, and removal and disposal of existing native soil as necessary to accomplish the work as shown in the Plans and City of Mountlake Terrace Engineering Details & Specifications, and any waste fees.

8-21 PERMANENT SIGNING

8-21.1 Description

(May 12, 2006 MLT GSP)

Section 8-21.1 is supplemented with the following:

This work consists of furnishing and installing new permanent signs, removing existing signs; and furnishing, installing and removing project signs.

8-21.2 Materials

(August 15, 2025 MLT GSP)

Section 8-21.2 is supplemented with the following:

New signs shall be in accordance with City of Mountlake Terrace Engineering Details & Specifications Drawing Nos. 501 through 504, the Plans, MUTCD (current edition), and WSDOT Sign Fabrication Manual (current edition).

8-21.3 Construction Requirements

(March 2, 2026 MLT GSP)

Section 8-21.3(5) is supplemented with the following:

Sign Code Numbers indicated on the Plans are in reference to the Washington State Department of Transportation (WSDOT) Sign Fabrication Manual and the Manual on Uniform Traffic Control Devices (MUTCD).

Upon completion of the project, the Contractor shall reset all signs, which have been disturbed or removed during the construction, in their permanent location to the satisfaction of the Owner. Existing concrete at the base of signpost shall be removed prior to installation in new concrete.

New signs shall be installed on 2-inch Telspar posts and in accordance with City of Mountlake Terrace Engineering Details & Specifications Drawing Nos. 501 through 504, the Plans, MUTCD (current edition), and WSDOT Sign Fabrication Manual (current edition).

The Contractor shall provide 4 copies or an electronic copy (in PDF format) of shop drawings for fabrication, fastening locations, and installation of Street Name Signs prior to fabrication, for Engineer's approval.

8-21.3(5) Sign Relocation

(May 12, 2006 MLT GSP)

Section 8-21.3(5) is supplemented with the following:

Existing permanent stop and street signs that conflict with the work shall be removed, stored by the Contractor, and reinstalled once the adjacent improvements are complete. Stop signs on A-frame stands shall be provided and placed by the Contractor at the time each existing stop sign is removed. The temporary stop signs shall be maintained by the Contractor until the permanent stop signs are reinstalled.

Add the following new section:

8-21.3(13) Project Sign ***(New Section)***

(August 11, 2010 MLT GSP)

The sign will be painted with lettering and logo(s) on a white background in strict proportion to the detail provided in appendix of this contract. Lettering will be of professional quality, in proportion to the sizes and font shown, centered in accordance with the detail. The sign shall be constructed of new materials and shall be maintained to present a clean and neat look throughout the project duration. The sign shall be erected level and plumb.

8-21.4 Measurement

(March 17, 2021 MLT GSP)

Section 8-21.4 is supplemented with the following:

"Project Sign" shall be measured per each.

8-21.5 Payment

(March 2, 2026 MLT GSP)

Section 8-21.5 is supplemented with the following:

"Project Sign" per each.

The unit contract price per each for installing "Project Sign" shall be full compensation for all labor, tools, equipment, and materials necessary for the complete installation, including but not limited to: excavation, backfill and compaction, maintaining the project sign for the life of the project, and removing and disposing of project sign when directed by the Engineer.

Add the following new section:

8-33 LIGHTWEIGHT FILL **(New Section)**

(*****)

8-33.1 Description

This work consists of filling the existing pressure reducing valve (PRV) vault with lightweight backfill (expanded polystyrene [EPS] "Geofoam").

8-33.2 Materials

Provide expanded polystyrene (EPS) "Geofoam" according to D6817, with the following physical properties:

Maximum Density	3.0 pounds per square foot	(ASTM D1622)
Minimum Compressive Strength at 1% deformation	5.8 pounds per square inch	(ASTM D1621)
Minimum Flexural Strength	30.0 pounds per square inch	(ASTM C203)
Flammability (Oxygen Index)	24.0%	(ASTM D2863)

EPS comes in a variety of sizes, however, is typically supplied as right rectangular prismoid blocks with nominal dimensions of 2 feet x 4 feet x 8 feet. Blocks shall be smooth and flat and have a dimensional tolerance of plus or minus 0.5%. Blocks with surface damage of 20% or more to a side area, or volume damage of 1% or more may be rejected.

8-33.3 Construction Requirements

EPS shall be constructed so that blocks fit together tightly and in such a way to avoid continuous vertical discontinuities by offsetting the joints between overlying blocks. Placing blocks in a "running bond" and rotating the pattern by 90 degrees in each successive layer is recommended to accomplish this. In cases where this is not possible due to physical obstructions, the Contractor shall indicate the alternate layout proposed in the wall submittal.

Where irregular shapes are required, the blocks may be trimmed in the field using a "hot-wire" cutting device (NiCr wire held between insulated handles and connected to a power source by a rheostat). The Contractor shall submit other options for cutting blocks to the Engineer for approval.

Protect blocks from damage at all times during construction. To avoid damage, only personnel and small, rubber-tired equipment shall operate directly on the blocks.

END OF DIVISION 8

DIVISION 9 – MATERIALS

9-03 AGGREGATES

9-03.6 Vacant
Delete this Section and replace it with the following:

9-03.6 Aggregates for Asphalt Treated Base (ATB)
(December 12, 2025 APWA GSP)

9-03.6(1) General Requirements

Aggregates for asphalt treated base shall be manufactured from ledge rock, talus, or gravel, in accordance with the provisions of Section 3-01 that meet the following test requirements:

Los Angeles Wear, 500 Rev.	30% max.
Degradation Factor	15 min.

9-03.6(2) Grading

Aggregates for asphalt treated base shall meet the following requirements for grading:

Sieve Size	Percent Passing
2″	100
½″	56-100
No. 4	32-72
No. 10	22-57
No. 40	8-32
No. 200	2.0-9.0

All percentages are by weight.

9-03.6(3) Test Requirements

When the aggregates are combined within the limits set forth in Section 9-03.6(2) and mixed in the laboratory with the designated grade of asphalt, the mixture shall be capable of meeting the following test values:

% of Theoretical Maximum Specific Gravity (GMM) (approximate)	93 @ 100 gyrations
AASHTO T324, WSDOT TM T718 or ASTM D3625 (Acceptable anti-strip evaluation tests)	Pass

The sand equivalent value of the mineral aggregate for asphalt treated base (ATB) shall

not be less than 35.

9-03.8 Aggregates for Hot Mix Asphalt

9-03.8(7) HMA Tolerances, Specification Limits and Adjustments

(December 12, 2025 APWA GSP)

Delete Section 9-03.8(7) and replace it with the following:

9-03.8(7) HMA Tolerances, Specification Limits and Adjustments

1. **Job Mix Formula Tolerances and Specification Limits** – The constituents of the HMA mixture at the time of acceptance shall conform to the following tolerances and specification limits:

Job Mix Formula Aggregate Tolerance Limits		
Aggregate, Percent Passing	**Statistical Evaluation**	**Visual Evaluation**
1", 3/4", 1/2" and 3/8" sieves	± 6%	± 8%
No. 4 sieve	± 5%	± 8%
No. 8 sieve	± 4%	± 8%
No. 200 sieve	± 2%	± 3%

Voids in Mineral Aggregate (VMA) Tolerance Limit from the Minimum VMA Value in Section 9-03.8(2) HMA Test Requirements			
Statistical Evaluation			
HMA Class			
3/8 inch	1/2 inch	3/4 inch	1 inch
-0.5%	-0.5%	-0.5%	-0.5%

Specification Limits		
HMA Mix Property	**Statistical Evaluation**	**Visual Evaluation**
Asphalt Binder	- 0.4% to + 0.5%	± 0.7%
Air Voids, Va	2.5% minimum to 5.5% maximum	

These tolerance and specification limits constitute the allowable limits as described in Section 1-06.2. The tolerance limit for aggregate shall not exceed the limits of the control points, except the No. 8 tolerance is ± 4% from the JMF, the No. 200 tolerance is ± 2.0% from the JMF with a minimum of 2.0% and a maximum of 8.0% passing the No. 200 sieve, other tolerance limits for sieves designated as 100 percent passing will be 99-100.

2. **Job Mix Formula Adjustments** – An adjustment to the aggregate gradation or asphalt binder content of the JMF requires approval of the Engineer. Adjustments to the JMF will only be considered if the change produces material of equal or better quality and

may require the development of a new mix design if the adjustment exceeds the amounts listed below.

a. **Aggregates** – The maximum adjustment from the approved mix design shall be 2 percent for the aggregate passing the 1½″, 1″, ¾″, ½″, ⅜″, and the No. 4 sieves, 1 percent for aggregate passing the No. 8 sieve, and 0.5 percent for the aggregate passing the No. 200 sieve. The adjusted JMF shall be within the range of the control points in Section 9-03.8(6).

b. **Asphalt Binder Content** – The Engineer may order or approve changes to asphalt binder content. The maximum adjustment from the approved mix design for the asphalt binder content shall be 0.3 percent.

9-05 DRAINAGE STRUCTURES AND CULVERTS

9-05.12 Polyvinyl Chloride (PVC) Pipe

(March 23, 2021 MLT GSP)

Section 9-05.12 is supplemented with the following:

PVC pipe couplings for connections to existing pipes shall be with Fernco Strong Back RC couplings.

9-14 EROSION CONTROL AND ROADSIDE PLANTING

9-14.2 Topsoil

9-14.2(1) Topsoil Type A

(July 5, 2023 MLT GSP)

Section 9-14.2(1) is supplemented with the following:

Topsoil Type A shall be imported and "three-way mix", and shall be friable surface soil from the A horizon as determined by the United States Department of Agriculture Natural Resources Conservation Service Soil Survey. Topsoil shall be free from: Materials toxic to plant growth; noxious weed seeds, rhizomes, roots; subsoil; stones and other debris. All topsoil shall pass through a 1 inch screen. Maximum electrical conductivity shall be 2.0 milliohms and the maximum exchangeable sodium percentage shall be 10 percent.

Topsoil Type A shall consist of a sandy loam, loam, or silt loam soil. These soil textural classes shall be determined by the United States Department of Agriculture Classification System. These textural classes shall be restricted by the following maximum percentage compositions based on the Material passing the Number 10 screen:

Separates	Maximum Percentage Allowable
Sand	60%
Clay	20%

The maximum percentage retained on a 1/4 inch screen shall not exceed 20 percent by volume. Of the material passing the 1/4 inch screen, the maximum allowable percentage of gravel retained on a Number 10 screen shall not exceed 10 percent by weight. Total organic matter shall be at least 5% by dry weight for areas where turf will be installed, and at least 10% by dry weight for all other landscape areas. Organic matter shall be determined by Loss-on-Ignition test. Acceptable tests include the most current version of ASTM D2974 "Test Methods for Moisture, Ash, and Organic Matter of Peat and Other Organic Soils" and TMECC 05.07A "Loss-On-Ignition Organic Matter Method". Topsoil Type A shall be amended with Compost if more organic content is needed to meet these organic matter requirements. In blended topsoil, 5% organic matter is produced by blending 20-25% compost by volume into a mineral soil, and 10% organic matter is produced by blending 35-40% compost by volume into a mineral soil. Compost used shall meet the definition of Composted Material in Section 9-14.5(8) of Standard Specifications. The pH shall be within the range 5.5 to 7.5.

Topsoil Type A shall not contain any viable seeds or roots capable of sprouting any State-listed noxious weed, or invasive root-propagating plants, including but not limited to horsetail, ivy, clematis, knotweed, etc. Soil found to contain these prohibited viable plant materials shall be removed and replaced at the Contractor's expense.

9-14.3 Seed

(December 18, 2015 MLT GSP)

Section 9-14.3 is supplemented with the following:

The grass seed dealer shall mix the grass seed. The Contractor shall furnish the Engineer with a dealer's guaranteed statement of the composition, mixture, and the percentage of purity and germination of each variety.

Seeded Lawn Mix

Name	By Weight	% Purity	% Germination
Perennial Rye (blend of two: 'Dasher 3' and 'Cutter II' or approved equal)	70%	98%	90%
Garnet Creeping Red Fescue	15%	98%	90%
Windward Chewing Fescue	15%	95%	90%

Seeded Lawn Mix shall be applied at the rate recommended by the grass seed manufacturer.

END OF DIVISION 9

CITY OF MOUNTLAKE TERRACE

STAFF REPORT

To: Mountlake Terrace City Council
From: John Marek, Traffic Engineer, Gary Schimek, Public Works Director
Meeting Date: May 28, 2026
Subject: Review Perteet Agreement Supplement 7 for Main St Phase 2 and 3 Construction Management

Required Reviews:

Jennifer Joki	Created/Initiated - 05/16/2026
Gary Schimek	Approved - 05/19/2026
Sirke Salminen	Approved - 05/19/2026
Hillary Evans	Approved - 05/22/2026
Carolyn Hope	Final Approval - 05/22/2026

Council Goal(s):
Growing Our Vibrant Community
Responsible Governance to Ensure Desired Level of Service

Legislative History:
1/25/2024 - City Council review of the original Main Street Phase 2 and 3 Agreement.
2/1/2024 - City Council consent agenda item. Council voted to authorize the City Manager to sign the agreement.

Subject Summary:
Staff are seeking a supplement to a professional services contract with Perteet to incorporate construction management services for Main Street Phase II Project. The proposed supplement includes incorporating a detailed scope of work, budget, and timeline for construction management services to their 2024 contract. The original request for proposals and Perteet's proposal included construction management services, but it was not formally scoped and budgeted at that time, due to the time needed to finalize design and right-of-way acquisition.

The project is undergoing final review by the Washington State Department of Transportation and is expected to be advertised on August 8th. Therefore, it is time to prepare for construction administration and management. The proposed services include:

- Continued Project Management

- Construction Observation and Administration Services
- Developer and Utility Coordination
- Construction Design Support
- Geotechnical Inspection and Materials TestingThe supplement revises the total contract amount to fund these additional services.

This contract amendment of $1,204,454 is within the project total budget of $4,576,175. The contract end date is proposed to be extended from 12/31/26 to 12/31/28.

Financial/Budget Impacts:

Budget Amendment Required? No

Budget and Sources:	$4,576,175 for Main Street ROW/ Design & Constr. Mgmt, Street Construction Fund 112
Expenditure:	$1,204,454
New Appropriation Required + Sources:	$0

Additional Financial Information:
N/A

Community Notifications:
City Council Agenda
If "Other," please specify:

Board/Commission Recommendation:
N/A

Staff Recommendation:
Staff recommends the City Council authorize the City Manager to approve Supplement 7 to Perteet's Main St Phase 2 and 3 Progressional Services Agreement. This can be accomplished by adding it to the June 4, 2026 Consent Agenda.

Council Motion:
N/A

Attachments:
1. Perteet Main Street Ph 2 and 3 Agreement Supplement 7 (Draft)
2. Perteet Main Street Ph 2 and 3 Agreement Supplement 6
3. Perteet Main Street Ph 2 and 3 Agreement Supplement 5
4. Perteet Main Street Ph 2 and 3 Agreement Supplement 4

5. Perteet Main Street Ph 2 and 3 Agreement Supplement 3
6. Perteet Main Street Ph 2 and 3 Agreement Supplement 2
7. Perteet Main Street Ph 2 and 3 Agreement Supplement 1
8. Perteet Main Street Ph 2 and 3 Agreement 02.012024

Washington State Department of Transportation

Supplemental Agreement Number 7	Organization and Address Perteet, Inc. 2707 Colby Ave., Suite 900 Everett, WA 98201 Phone: 425-252-7700	
Original Agreement Number N/A		
Project Number N/A	Execution Date February 1, 2024	Completion Date December 31, 2026
Project Title Main Street Phase 2 & 3	New Maximum Amount Payable $4,576,175.00	
Description of Work See Exhibit A - Scope of Services		

The Local Agency of City of Mountlake Terrace
desires to supplement the agreement entered in to with Perteet, Inc.
and executed on 02/01/2024 and identified as Agreement No. N/A
All provisions in the basic agreement remain in effect except as expressly modified by this supplement.
The changes to the agreement are described as follows:

I

Section 1, SCOPE OF WORK, is hereby changed to read:

See attached Exhibit A - Scope of Services

II

Section IV, TIME FOR BEGINNING AND COMPLETION, is amended to change the number of calendar days for completion of the work to read: December 31, 2028

III

Section V, PAYMENT, shall be amended as follows:

See attached Exhibits D & E - Consultant and Subconsultant Cost Computations.
Supplement 7 will amend existing budget to add an amount not to exceed $1,204,454.00 for a new Maximum Amount Payable of $4,576,175.00.

If you concur with this supplement and agree to the changes as stated above, please sign in the Appropriate spaces below and return to this office for final action.

By: Perteet, Inc.

Consultant Signature

By: City of Mountlake Terrace

Approving Authority Signature

Date

DOT Form 140-063
Revised 09/2005

EXHIBIT "A"
City of Mountlake Terrace
Main Street Phase 2
Amendment 7 - Construction Management

INTRODUCTION

The Main Street Revitalization – Phase 2 Project on 56th Ave W improves of 56th Ave W, between 236th St SW and 230th St SW including reconstruction of cement concrete traffic curb and gutter, cement concrete sidewalk and curb ramps, HMA for new pavement, retaining walls, installing catch basins and storm drainage pipe, undergrounding of aerial utilities, water main installation, relocate existing water service meters, traffic signal systems, illumination systems, ITS systems, permanent signing, pavement marking, landscaping, irrigation, erosion/water pollution control, traffic control, property restorations.

The CONSULTANT will provide bid-plan set revisions, construction observation, contract administration and project management services for the CITY. The CONSULTANT will endeavor to protect the CITY against defects and deficiencies in the work of the Contractor but cannot guarantee the Contractor's performance and shall not be responsible for construction means, methods, techniques, sequences, or procedures for safety precautions and programs in connection with the work.

The CONSULTANT's services shall be limited to those expressly set forth herein. If the service is not specifically identified herein, it is expressly excluded. The CONSULTANT shall have no other obligations, duties, or responsibilities associated with the project except as expressly provided in this Agreement and any additional services authorized by amendment.

Transferring Budget within Contract Maximum: The level of effort is specified in the Scope of Services. The budget may be transferred between discipline tasks at the discretion of the CONSULTANT, provided that the total contracted amount is not exceeded. The CONSULTANT will have the flexibility to manage budget within a given discipline on a subtask level.

Services provided by the CONSULTANT consist of:

GENERAL SCOPE OF SERVICES

This agreement includes professional services to provide construction observation, contract administration and project administration services for the Main Street Phase 2 Project. The project is funded through the Washington State Transportation Improvement Board (TIB), State Funds, Federal Grants and local Mountlake Terrace funds. The procedures outlined in the WSDOT Local Agency Guidelines (LAG Manual) will be used during this project.

This scope of services describes the Task Elements to be accomplished by the CONSULTANT as summarized under each task element. This scope consists of the following task elements:

- Task 1 – Project Management (Supplemented)
- Task 5 – 56th Avenue W – PS&E (Supplemented for Bid Plan Set Updates and Revisions)

- Task 17 – Construction Administration (New)
- Task 18 – Construction Observation (New)
- Task 19 – Construction Design Support (New)
- Task 20 – Geotechnical Inspection and Materials Testing (New)

Task 1 – Project Management (Supplemented)

Provide continued project administration of the CONSULTANT team. The addition of the construction management task will require further project management effort.

Management Administration

This will include:

- Control of construction management project budget and schedule.
- Preparation of monthly invoices and progress reports.
- Maintain on-going contact with the CITY's Project Manager meetings, telephone discussions, and electronic mail.
- Provide monthly reporting of project budget status. Percent of budget expended, and estimation of project completion will be provided.
- Provide access to Perteet's SharePoint site so the CITY can download necessary documents.

Assumptions:

- Twenty-four months of invoices and progress reports.
- For budgeting purposes, weekly meetings of Twenty-four months duration were assumed.

Deliverables:

- Monthly invoice and progress reports
- Updates to CITY Management via email and teleconference

CM SCOPE OF SERVICES DEFINED

Construction Observation and Administration Services

The scope of services by the CONSULTANT for the Main Street Phase 2project is summarized below. These services will include project administration and construction observation for the CITY as detailed below:

General Assumptions:

- The attached budget for the services detailed below is based on the services of construction observation and administration on a 258 working day schedule.

- Construction survey and staking to be provided by the Contractor per the Contract Provisions. There is no survey support provided in this scope of services. The Contractor will also be responsible for surveying and reporting changes from the plans for the red line mark-ups.
- Construction documentation will be prepared using CITY and/or WSDOT forms from the Local Agency Guidelines (LAG) Manual in anticipation of construction documentation reviews by WSDOT and the Washington State Auditor's Office.
- The Consultant will provide geotechnical inspection, material sampling, and material testing through HWA GeoSciences.
- The Consultant will provide construction Request for Information responses related to signal and illumination through Concord, Inc.
- The Consultant will provide construction Request for Information responses related to storm drainage and irrigation through Osborn Conulting, Inc.
- The Consultant will provide construction Request for Information responses related to Urban Design and Landscaping through Toole, Inc.
- The CONSULTANT will prepare the conformed plans and specifications. The CITY will provide copies of the conformed plans and specifications to all parties.
- The CONSULTANT will prepare and send a signed Notice to Proceed Letter to Contractor.
- The CONSULTANT will organize, facilitate, and produce minutes of the project Preconstruction Conference and the weekly progress meetings. The CITY will provide the format for the Preconstruction Conference.
- The CONSULTANT will prepare suspension letters and letters acknowledging substantial completion and final completion for CITY signature and approval.
- The CONSULTANT will notify the CITY of any potential contract changes. When necessary, the CONSULTANT will prepare all Change Orders and obtain the Contractors' endorsement and CITY approval, prior to the work being performed.
- The CITY will process monthly pay estimates to the Contractor. The CONSULTANT will provide the pay estimate and monthly ledgers of quantities for preparation of the monthly pay estimates.
- The CONSULTANT will prepare and distribute the weekly statements of working days.
- The CITY will be responsible for addressing right-of-way issues.
- Mountlake Terrace will be responsible for electrical and signal inspection. The CONSULTANT will coordinate with Mountlake Terrace for their inspection of the signal and electrical systems. The CONSULTANT will observe the civil elements of the electric and signal systems. The CONSULTANT will provide construction design support for signals.
- The Contractor will be responsible for all contract mandated permits and any observations related to permit requirements. The CONSULTANT will confirm that the Contractor complies with these requirements.
- "Commissioning" will be the responsibility of the Contractor. The CONSULTANT will enforce the contract requirements.

- Prior to the start of construction, the CONSULTANT will prepare a photo log of the construction site using Pavia HeadLight.
- Additional effort beyond the reasonable industry standard for each task will be considered Extra Services.
- For the following services, labor allowances are an estimate only. The level of effort required for these services cannot be accurately predicted as it depends on issues outside of the CONSULTANT team's control. Some of these issues include quality of Contractor work and progress, adverse weather conditions, and unforeseen conditions at the site. Allowance for any such issues are not included in the Labor Hours estimate.
- Contractor to document as-built information with CONSULTANT's review.

Task 5 – 56th Avenue W – PS&E (Supplemented)

Additional design effort is needed to address changes to project limits, including revising channelization, frontage improvements related to coordination efforts. This has led to increased design and drafting time for plan, estimate, and specification development.

Task 9– Developer and Utility Coordination (Supplemented)

The level of effort for coordination with developers has increased. This has increased the amount of coordination meeting, exhibits, and design updates needed to further discussions with developers and franchise utilities.

Task 17 – Construction Administration (New)

Provide documentation and record keeping in compliance with CITY and WSDOT LAG requirements. This is a TIB, State, Local and federally funded project; therefore, record keeping will be consistent with Federal and WSDOT Local Agency Guidelines and Standards. The fee assumes 3 hours per working day for both the Construction Director and the Construction Technician and an additional 40 hours for contract setup and 145 hours for contract closeout for the Director, Technician, Inspector, and Supervisor

Project Setup – Project File/Records and documentation setup. Project filing index will be based on the CONSULTANT'S file index.

Produce and distribute the weekly statements of working days.

Calculate force account work based on WSDOT/AGC Blue Book Rental Agreement or equivalent means for determination of rates.

Track Materials Approval (RAMs, QPLs, Shop Drawings, Certificates of Compliance, etc.) and Material Acceptance (inspected stamps, materials tests, visual variation forms) for each bid item for which there are materials. Specific materials tracking responsibilities will be coordinated with the designated Materials Laboratory.

Review project records on an on-going basis to monitor proper approval of all materials that are incorporated into the project.

Create and maintain a Record of Materials (ROM) that will log all construction Contractor submittals. Transmit submittals to CONSULTANT'S office staff, CITY, and SUBCONSULTANTS as needed for review. Return submittals to the construction Contractor upon completion of the review process. Maintain submittals files.

Review Contractor submitted request for approval of material sources and Qualified Products List (QPL) Data Sheets to determine compliance with Contract documents. Contractor will be directed to submit separate RAM forms for each bid item.

Maintain files for individual bid item compliance for material documentation.

Evaluate and determine the acceptability of substitute or “or-equal” materials and equipment proposed by the construction Contractor and prepare necessary documentation of material substitutions.

RFIs. Receive all requests for information (RFIs) from the construction Contractor. Coordinate responses to RFIs with the CITY and the CONSULTANT’s design team as needed. Respond to RFIs with clarifications and interpretations of the Contract Documents as appropriate and necessary.

Review and monitor Contractor’s compliance with construction schedule based upon updates submitted by the Contractor. Assist the CITY in verification, documentation, and/or negotiation of time extensions requested by the Contractor. Evaluate potential schedule impacts of all change order work.

Review Contractor payment based on completed work and provide comments to Contractor and the CITY for approval and payment.

Attend and participate in weekly project meetings with the CITY and Contractor to review the progress of the work and identify and address field issues.

Obtain Request to Sublet documentation from subcontractors and communicate to the CITY for their review and processing.

Obtain Notice of Intent to Pay Prevailing Wage and Affidavit of Wages Paid for contractors and subcontractors and communicate to the CITY for their review and processing.

Maintain orderly electronic records and files at the job site. These records and files may include, but are not limited to:

- Materials Approvals (RAMs)
- Contractor’s Schedules
- Record of Materials (ROM)

- Progress Payment Documentation and Backup

Project Close Out – At completion of the project, the CONSULTANT will provide electronic files of all project documentation to the CITY. The CONSULTANT will provide paper copies of all executed. Additional paper files will also be provided to the CITY upon request.

Deliverables:

- Monthly pay estimate backup (FNRs)
- Final contract records at end of project, including:
  - All payment backup documentation organized by pay estimate and FNR number.
  - Weekly statements of working days
  - All contractor material submittals and responses – (Electronic Only)
  - Daily Inspection Reports (IDRs) – (Electronic Only)
  - Material Testing Reports – (Electronic Only)
  - Electronic records of all construction documentation, including all paper records plus material documentation by bid item, and construction photos.
  - Completed Record of Materials

Task 18 – Construction Observation (New)

Provide services of Construction Observation to observe and verify by measurements the technical conduct of the construction, including providing day-to-day contact with the Contractor and the CITY. The fee assumes 8 hours per working day for both the Construction Technician Inspector with an additional 300 hours for unanticipated overtime and secondary / back-up inspection hours.

Provide on-site observation and monitoring as requested to observe the technical conduct and progress of the construction. The Construction Observer will not be responsible for the means, methods, techniques, or procedures of the construction selected by the Construction Contractor(s) or for any failure of Construction Contractor(s) to comply with laws, ordinances, rules, or regulations applicable to the construction work. The parties recognize that the construction Contractor(s) is responsible for ensuring that construction is in accordance with the plans and specifications.

Project Daily Report. Prepare daily construction reports, detailing the construction Contractor's operations performed for each day, and records decisions and observations of a general or specific nature in chronological order. Measure quantities of materials installed, log equipment and staff used, and other related items.

Verify in the daily report that the Contractor is working with the proper traffic control plans.

Document CITY-authorized work being done on a force account basis.

Verification of material approvals and ensuring it is complete prior to material being used on site.

Coordinate Materials Testing and Inspection. In those instances where unsatisfactory test results are obtained, follow through with notification to the construction contractor and retesting of the materials after corrections are made.

Collect scale certifications.

Progress Payment Verification.

Collect and tabulate all quantity delivery tickets.

Prepare field note records in accordance with funding requirements.

Check that Manufacturer's Certificates of Compliance and Certificates of Material Origin are received prior to payment.

Verify acceptance sampling and testing frequencies reflect the actual quantities used.

Photographs. Tabulate construction photographs and progress photographs of construction activities daily, to document progress of the work and job site conditions encountered. Particular attention will be given to any work performed below the finished grade.

Perform a final review and observation of the construction work and prepare a final list of items to be corrected. After substantial completion of the project, verify completion of the punch list.

Record drawings. Review the construction Contractor's Record Drawings on a bi-weekly basis (and upon completion of major tasks) to verify posted changes.

In general, the CONSULTANT will field review Materials Approval (RAMs, QPLs, Shop Drawings, Certificates of Compliance, etc.) and Material Acceptance (inspected stamps, materials tests, visual variation forms) for each bid item for which there are materials. In general, the CONSULTANT will review Materials Documentation as follows:

Review project records on an ongoing basis to ensure proper approval of all materials are incorporated into the project.

Collect test reports from materials testing labs for compliance with the information given in the contract documents.

Collect Manufacturer's Certificates of Compliance and Certificates of Material Origin for Steel and Iron materials being permanently incorporated into the project.

Calculate force account work based on WSDOT/AGC Blue Book Rental Agreement or equivalent means for determination of rates.

Sampling and testing for Gravel Borrow, CSTC, CSBC, and other aggregates as needed, based on estimated quantities.

Inspection and testing of compacted aggregates for trench backfill, roadway and concrete subgrade.

Concrete inspection and testing for curb and gutter, pole foundations, and ADA ramps. Testing including slump, air, and fabrication of compressive strength specimens.

Sampling and testing HMA during paving for Rice density, extraction, and gradation (minimum: one test sample per day or per 1000 tons).

Inspection and testing of HMA placement and compaction.

QA review, Reporting, Construction Meetings, and Submittal Review.

Conduct Contractor employee interviews to review certified payroll for compliance at random intervals.

Produce and distribute weekly statements of working days.

Attend and participate in weekly project meetings with the CITY and Contractor to review the progress of the work and identify and address field issues.

Maintain orderly electronic records and files at the job site. These records and files may include, but are not limited to:

- Preconstruction and construction progress photos
- Daily Inspection Reports
- Material Acceptance Verification
- Test Reports
- Weekly statements of working days

At completion of the project, Perteet will provide electronic files of all documentation identified above to the CITY. Additional paper files will also be provided to the CITY upon project completion.

Assumption

Watermain testing and inspection will be performed by City crews

Deliverables:

- Inspector Daily Reports
- Field Note Records documenting all payments.
- Final contract records at end of project, including:
  - All payment backup documentation organized by pay estimate and FNR number.
  - Weekly statements of working days
  - Daily Inspection Reports
  - Material Testing Reports

Task 19 – Construction Design Support (New)

Construction design support shall be limited to assistance with Requests for Information (RFIs) as requested by the CITY**.** Should submittal review or design change assistance be required, the CONSULTANT and the CITY will negotiate a supplement for additional design services.

Assist the CITY Project Manager with minor design clarifications where field modifications are requested, including providing technical design assistance to field personnel that does not require change orders or formal plan changes.

The CONSULTANT will assist the city with responses to Requests for Information (RFIs) related to the roadway, curb, grading, waterline, sidewalk, and driveway design to clarify the intent of the contract documents.

The CONSULTANT will assist the city with responses to Requests for Information (RFIs) related to the traffic signal, illumination, and ITS equipment to clarify the intent of the contract documents.

The CONSULTANT will assist the city with responses to Requests for Information (RFIs) related to the storm drainage and irrigation to clarify the intent of the contract documents.

The CONSULTANT will assist the city with responses to Requests for Information (RFIs) related to the urban design and landscaping to clarify the intent of the contract documents.

Assumptions:

- Assume thirty-two design clarification or field modifications that will require approximately four hours of preparation and coordination.
- Up to thirty-two RFIs

Deliverables:

- Field directives as PDF markups or sketches
- Written responses to up to fifteen (15) RFIs will be returned electronically in PDF format via email to the Contractor

Optional Services:

- Design Coordination site visits
- Submittal review
- City-initiated design changes
- Record Drawings

Task 20 – Geotechnical Inspection and Materials Testing

- QA Review, PM, Reporting, Submittal Reviews, and Report Distribution
- Preconstruction Meeting
- Sampling of CSBC, CSTC, GB for SEW, and Gravel Borrow
- Sampling of GB for Drywells, Bedding Sand, and GB for Drains
- Inspection and Testing of Trench Backfill, Wall Bases and SEW Backfill
- Inspection and Testing of compacted aggregates for roadway/sidewalk construction
- Asphalt Inspection and Testing
- Concrete Inspection and Testing

Additional Services

The CONSULTANT may provide additional services as directed by the CITY which are not identified in this Scope of Services. Additional services shall not commence without written authorization and approval from the CITY and a supplement to the contract.

Services Not Included in this Scope of Services

1. Preparation of Constructed MEF
2. Public outreach support and communications

Information Provided by Others

The CITY shall furnish, at the CITY's expense, all information, requirements, reports, data, surveys, and instructions required by this Agreement. The CONSULTANT may use such information, requirements, reports, data, surveys, and instructions in performing its services and is entitled to rely upon the accuracy and completeness thereof. Further, the CITY agrees that the CONSULTANT shall have no responsibility for any part of the Project designed by other consultants engaged by the CITY.

Time for Completion

The scope of this contract is based upon the Contractor completing all construction activity within the timeframe specified in the Contract Documents and is based upon a 258 working day schedule by a full time Construction Observer. In support of this schedule, our contract provides one part time week of project set up time and two part-time months of project closure time (Punchlist, Closeout Record Preparation, etc.). The project setup and closure hours are noted in Project Setup and Closeout sections of the fee estimate. If the work schedule changes due to the Contractor working weekends, extended hours, work performed during suspension, added working days due to change orders or weather delays, or if the construction activity extends beyond the contract time, the CONSULTANT shall inform the CITY immediately to allow the CITY an opportunity to authorize additional budget for the CONSULTANT to provide the

additional services as needed. The additional services will be billed at the hourly rates established in the base agreement.

PERTEET

EXHIBIT D

Consultant Fee Determination Summary

2707 Colby Avenue, Suite 900, Everett, WA 98201 P 425-252-7700 F 425-339-6018

Project: Main Street Phase 2
Client: City of Mountlake Terrace
Consultant: Perteet
Perteet Project No. 20230184.0007
Date: 03/19/2026

HOURLY COSTS

Classification	Hours	Rate	Amount
Construction Supervisor	67	$290.88	$19,488.96
Construction Director	848	$392.63	$332,950.24
Const Technician I	2305	$119.42	$275,263.10
Sr Construction Technician	874	$190.32	$166,339.68
Accountant	24	$172.11	$4,130.66
Sr. Engineer / Mgr	109	$267.84	$29,194.56
Sr. Engineer / Mgr	125	$265.98	$33,247.21
Civil Designer II	150	$160.79	$24,118.50
Civil Designer II	162	$160.11	$25,937.31
Civil Designer II	174	$156.70	$27,266.54
Civil Designer II	77	$159.12	$12,252.57
Civil Designer II	137	$141.80	$19,426.91
Construction Observer III	84	$213.29	$17,916.36
Lead Technician/Designer	96	$206.24	$19,799.34
Labor Total	**5232**		**$1,007,331.94**

REIMBURSABLES

Expenses	Cost	Markup	Amount
Mileage	$725.00	1.0	$725
Headlight	$4,800.00	1.0	$4,800
Total Expenses			**$5,525**

SUBCONSULTANTS

Subconsultants	Amount
Toole	$13,585
Concord	$11,709
Osborn	$25,517
HWA GeoSciences	$140,786
Total Subconsultants	**$191,597**

CONTRACT TOTAL	**$1,204,454**

Rates shown reflect the typical compensation rate of employees assigned to the billing category listed. Each category may have multiple employees assigned to that billing category and each employee may have a different hourly rate of pay. Perteet's Hourly Rates are subject to change each year on January 1st.

Exhibit E1

Subconsultant Fee Determination Summary

Subconsultant: Toole
Project: Main Street Phase 2
Client: City of Mountlake Terrace
Date: 3/19/2026

HOURLY COSTS

Classification	Hours	Rate	Amount
Project Engineer II	28	$199.78	$5,593.77
Senior Landscape Architect	40	$199.78	$7,991.10
Total Labor Costs	**68**		**$13,584.87**

CONTRACT TOTAL	**$13,585**

Exhibit E2

Subconsultant Fee Determination Summary

Subconsultant: Concord
Project: Main Street Phase 2
Client: City of Mountlake Terrace
Date: 3/19/2026

HOURLY COSTS

Classification	Hours	Rate	Amount
Senior Engineer 6	32	$223.54	$7,153.12
Assistant Engineer 5	32	$120.00	$3,840.10
Admin (Project Coordinator 3)	8	$89.41	$715.31
Total Labor Costs	**72**		**$11,708.53**

CONTRACT TOTAL	**$11,709**

Exhibit E3

Subconsultant Fee Determination Summary

Subconsultant: Osborn
Project: Main Street Phase 2
Client: City of Mountlake Terrace
Date: 3/19/2026

HOURLY COSTS

Classification	Hours	Rate	Amount
Principal	10	$304.90	$3,049.01
Senior Project Manager	57	$230.90	$13,161.05
Project Engineer	7	$183.53	$1,284.73
Senior CADD Designer	1	$153.93	$153.93
Project Landscape Architect	4	$177.61	$710.45
Senior Administration	39	$183.53	$7,157.76
Total Labor Costs	**118**		**$25,516.92**

CONTRACT TOTAL	**$25,517**

Exhibit E4

Subconsultant Fee Determination Summary

Subconsultant: HWA GeoSciences
Project: Main Street Phase 2
Client: City of Mountlake Terrace
Date: 3/19/2026

HOURLY COSTS

Classification	Hours	Rate	Amount
GeoEng VIII	12	$340.21	$4,082.50
Geol VII	42	$241.24	$10,132.01
Geol II	734	$129.90	$95,344.84
Contracts	12	$163.92	$1,967.02
Total Labor Costs	**800**		**$111,526.37**

REIMBURSABLES

Acceptance Testing for CSBC and CSTC (GS, SE, Fracture) - assu	$395.00	5.0	$1,975.00
Acceptance Testing for Gravel Borrow (GS, SE) - assume 2 sour	$325.00	2.0	$650.00
Acceptance Testing for GB for SEW (GS, SE, pH) - assume 2 sou	$390.00	2.0	$780.00
Acceptance Testing GB for Drywells, JUT Sand, and GB for Drai	$205.00	3.0	$615.00
Proctor Tests on all Materials to be Compacted	$330.00	9.0	$2,970.00
Concrete Compressive Strength Cylinders (assume 49 sets x 4 c	$55.00	196.0	$10,780.00
HMA Oven Correction Factor (2 mixes x 1 source x 3 burns)	$625.00	2.0	$1,250.00
HMA: Rice Density, Extraction/Gradation	$800.00	4.0	$3,200.00
Mileage to Job Site IRS Rate 0.725/mile, assume 180 trips	$1,440.00	1.0	$1,440.00
Mileage for Sampling Aggregates and HMA at Sources	$440.00	1.0	$440.00
Nuclear Gauge Rental (Soil @ $60; Thin Lift @ $75): 82 days	$5,160.00	1.0	$5,160.00
			$29,260

CONTRACT TOTAL $140,786

Supplement 6 **Main Street Phase 2 & 3 Agreement**	Organization Name and Address: **Perteet, Inc.** **2707 Colby Ave, Ste 900** **Everett, WA 98201**	
Original Agreement Number: N/A	Execution Date: 02/01/2024	Completion Date: 12/31/2026
Project Title Main Street Phase 2 & 3	Original Amount Authorized: Amount Previous Supplements: Amount this Supplement: **Maximum Amount Payable:**	$2,883,050.00 $382,034.00 $106,637.00 **$3,371,721.00**
Description of Work: Amendment to supplement right-of-way services for Phase 2.		

The City of Mountlake Terrace desires to supplement the agreement with and executed on 02/01/2024.

All provisions in the basic agreement remain in effect except as expressly modified by this and previous supplements.

The changes to the agreement are described as follows:

I

Section II, General Scope of Work, shall be amended to include new Exhibit A, Scope of Work and Exhibit D, Consultant and Subconsultant Cost Computations.

If you concur with this supplement and agree to the changes as stated above, please sign in the appropriate space below and return to this office for final action.

By: Perteet, Inc.

_____ _____

Jesse Thomsen, PE Date

By: City of Mountlake Terrace

_____ _____

Jeff Niten, City Manager Date

SCOPE OF WORK
City of Mountlake Terrace
Main Street Revitalization, Phases 2 and 3
Amendment #6
Right of Way Supplement

STATEMENT OF PURPOSE

The City of Mountlake Terrace (City) has requested revisions to parcels be included with the Main Street Revitalization Phase 2 that include the following items:

- 26 revisions to appraisals
- 21 revisions to offer packages
- 26 revisions for right-of-way acquisition
- Managing changes to legal exhibits for each revision
- Additional negotiations required for each design change for at least 26 parcels
- Direct Costs expended to appraiser for Revised Appraisal Reviews for 26 parcels

This has increased the level of effort from the original contract for right of way acquisition services and design support the task.

Task 1 – Project Management

The original design contract was to complete by the end of 2024, and was extended to complete design by the end of 2025. Design is currently forecast to be completed by the end of June. The additional work has increased coordination for disciplines, as well as expected bid time for the project. This has increased the amount of time needed for project management to coordinate efforts to complete tasks.

Assumptions:

- Additional coordination for right of way task
- Coordination for development and property owner coordination

Task 4 – Right-of-Way 56th (Phase 2) (Supplemented)

4.1 Update Property Owner Exhibits

The additional work has increased the effort for property owner exhibits. Design and drafting for revisions to property owner exhibits based on the revisions in project direction.

4.3 Right-of-Way Appraisal and Acquisition Services

This work will include preparing a right-of-way funding estimate, conducting appraisals and review appraisals, property owner negotiations and acquisition documentation, and WSDOT certification support. The Original contract assumes 40 parcels for appraisal and up to 40 parcels for negotiations. Due to design and funding changes parcels acquisition areas were changed, removed, or altered. This affected the level of effort for required deliverables and resulted in scope change.

Deliverables:

- 14 Revised Appraisals, and Appraisal Reviews and accompanying documentation
- 14 Revised Offer letters and project correspondence log for altered ROW negotiations
- Recission letters and property owner correspondence resulting from those 14 design changes

Appraisal and Appraisal Review Coordination

- Managing and coordinating appraisal task and any subconsultants, communicating changes made to design and ROW plans.
- Providing all documentation required to complete revised appraisal report review, supporting the new City's Determinations of Value.
- Integrate findings into offer packages.

Deliverables:

- Up to 14 revised Review Appraisals

Negotiations, Administrative Settlements, QA/QC

- Reviewing of all revised review appraisal and compensation data for 14 parcels.
- Preparation of revised offer packages for 14 parcels.
- Delivering, and presenting revised offer packages for 14 parcels.
- Additional level of effort for complex parcel negotiations and design coordination involving coordination with Public Works, Community and Economic Development, developers and their designers.
- QA/QC of all documents, tasks, and processes before, during, and after acquisition process.
- Tracking and QA/QC of plan, legal description, and exhibit changes and coordination for updates.
- Prep and delivery of recession letters and property owner follow-up.

Deliverables:

- Up to 14 revised offer packages.
- Updated diaries to reflect the increased level of effort during negotiations resulting from 14 design changes.

WSDOT Certification and File Closeout

- Collaborate with City during certification process.
- Additional level of effort for complex partial reconveyance obtention and coordination
- Additional level of effort required to prepare Certification files due to WSDOT LAC review requirement changes.
- Additional level of effort to address issues or concerns raised by Local Programs.

Deliverables:

No change.

Task 8 – Right-of-Way 232nd/234th (Phase 2)

8.1 Update Property Owner Exhibits

The additional work has increased the effort for property owner exhibits. Design and drafting for revisions to property owner exhibits based on the revisions in project direction.

8.3 Right-of-Way Appraisal and Acquisition Services

This work will include preparing a right-of-way funding estimate, conducting appraisals and review appraisals, property owner negotiations and acquisition documentation, and WSDOT certification support. The Original contract for Task 8 assumes 24 parcels for appraisal and up to 15 parcels for negotiations. Due to design and funding changes parcels acquisition areas were changed. This affected the level of effort for required deliverables and resulted in scope change.

Deliverables:

- 12 Revised Appraisal and review appraisal documentation
- 12 Revised Offer letters and project correspondence log for ROW negotiations
- Recission letters and property owner correspondence resulting from the 12 design changes

Title Searches and Review

- No change.

Deliverables:

- No change.

Appraisal and Appraisal Review Coordination

- Coordinating appraisal task and any subconsultants, communicating changes made to design and ROW plans.
- Providing all documentation required to complete revised appraisal report review, supporting the new City's Determinations of Value.
- Integrate findings into offer packages.

Deliverables:

- Up to 12 revised Review Appraisals

Negotiations, Administrative Settlements, QA/QC

- Reviewing of all revised review appraisal and compensation data for 14 parcels.
- Preparation of revised offer packages for 12 parcels.
- Delivering, and presenting revised offer packages for 12 parcels.
- Additional level of effort for complex parcel negotiations and design coordination involving coordination with Public Works, Community and Economic Development, developers and their designers.
- QA/QC of all documents, tasks, and processes before, during, and after acquisition process.
- Tracking and QA/QC of plan, legal description, and exhibit changes and coordination for updates.
- Prep and delivery of recession letters and property owner follow-up.

Deliverables:

- Up to 12 revised offer packages.
- Updated diaries to reflect the increased level of effort during negotiations resulting from 12 design changes.

WSDOT Certification and File Closeout

- Collaborate with City during certification process.
- Additional level of effort for complex partial reconveyance obtention and coordination
- Additional level of effort required to prepare Certification files due to WSDOT LAC review requirement changes.
- Addressing any issues or concerns raised by Local Programs.

Deliverables:

- No change

Requested By: _____ Date: _____

Approved: _____ Date: _____

_____
Title

EXHIBIT D

Consultant Fee Determination Summary

2707 Colby Avenue, Suite 900, Everett, WA 98201 P 425-252-7700 F 425-339-6018

Project: Main Street Phase 2
Client: City of Mountlake Terrace
Consultant: Perteet
Perteet Project No. 20230184.0000
Date: 03/13/2026

HOURLY COSTS

Classification	Hours	Rate	Amount
Sr. Engineer / Mgr	32	$267.84	$8,570.88
Sr. Engineer / Mgr	48	$265.13	$12,726.47
Lead Technician/Designer	48	$205.59	$9,868.29
Civil Designer II	32	$160.79	$5,145.28
Labor Total	**160**		**$36,310.92**

SUBCONSULTANTS

Subconsultants	Amount
Commonstreet	$70,326
Total Subconsultants	**$70,326**

CONTRACT TOTAL	**$106,637**

Rates shown reflect the typical compensation rate of employees assigned to the billing category listed. Each category may have multiple employees assigned to that billing category and each employee may have a different hourly rate of pay. Perteet's Hourly Rates are subject to change each year on January 1st.

Exhibit D

Subconsultant Fee Determination Summary

Subconsultant: Commonstreet
Project: Main Street Phase 2
Client: City of Mountlake Terrace
Date: 3/13/2026

HOURLY COSTS

Classification	Hours	Rate	Amount
Senior Project Manager	19	$249.33	$4,737.30
Project Manager	38	$219.11	$8,326.16
Senior Right of Way Agent	52	$204.00	$10,607.92
Right of Way Agent	104	$125.93	$13,096.20
Senior Project Control Specialist	158	$171.26	$27,058.76
Total Labor Costs	**371**		**$63,826.35**

REIMBURSABLES

Appraisal Review	$6,500.00	1.0	$6,500.00
			$6,500

CONTRACT TOTAL $70,326

Docusign Envelope ID: 82A98ACD-A851-42FA-B853-54AF753D39FB

CITY OF MOUNTLAKE TERRACE

Supplement 5 **Main Street Phase 2 & 3 Agreement**	Organization Name and Address: **Perteet, Inc.** **2707 Colby Ave, Ste 900** **Everett, WA 98201**	
Original Agreement Number: N/A	Execution Date: 02/01/2024	Completion Date: 12/31/2026
Project Title Main Street Phase 2 & 3	Original Amount Authorized: Management Reserve: Amount Previous Supplements: **Maximum Amount Payable:**	$2,883,050.00 $200,000.00 $382,034.00 **$3,265,084.00**
Description of Work: Amend agreement to change Prime Consultant and Subconsultant cost computations.		

The City of Mountlake Terrace desires to supplement the agreement with and executed on 02/01/2024.

All provisions in the basic agreement remain in effect except as expressly modified by this and previous supplements.

The changes to the agreement are described as follows:

I

Section V, Payment Provisions, shall be amended to include new Exhibits D and E, Prime Consultant and Subconsultant Cost Computations.

If you concur with this supplement and agree to the changes as stated above, please sign in the appropriate space below and return to this office for final action.

By: Perteet, Inc.

Jesse Thomsen, PE — 11/13/2025 Date

By: City of Mountlake Terrace

Jeff Niten, City Manager — 11/16/2025 Date

Docusign Envelope ID: 82A98ACD-A851-42FA-B853-54AF753D39FB

EXHIBIT D-1

Negotiated Hourly Rate Sheet
Perteet, Inc.
2707 Colby Avenue, Suite 900
Everett, WA 98201
City of Mountlake Terrace
Main St. Revitalization Phase 2, 56th Avenue W. (20230184)

		Overhead:	Fixed Fee:	
		185.52%	30.00%	
Job Classification	**Direct Labor (DL)**	**Overhead (OH x DL)**	**Fixed Fee % (Fee x DL)**	**All Inclusive Hourly Rate**
Executive	166.35	308.61	49.91	524.87
Principal	141.34	262.21	42.40	445.96
Director	124.44	230.86	37.33	392.63
Senior Associate	94.16	174.69	28.25	297.09
Senior Engineer/ Manager	84.89	157.49	25.47	267.84
Lead Engineer/ Manager	65.10	120.77	19.53	205.40
Cultural Resources Manager	62.16	115.32	18.65	196.13
Cultural Resources Specialist III	49.61	92.04	14.88	156.53
Cultural Resources Specialist II	45.00	83.48	13.50	141.98
Cultural Resources Specialist I	35.00	64.93	10.50	110.43
Senior Ecologist/ Senior Environmental Scientist	69.68	129.27	20.90	219.85
Lead Ecologist	61.00	113.17	18.30	192.47
Engineer III	66.75	123.83	20.03	210.61
Civil Designer II	50.96	94.54	15.29	160.79
Civil Designer I	39.38	73.06	11.81	124.25
Lead Environmental Scientist	61.36	113.84	18.41	193.60
Environmental Scientist III	42.12	78.14	12.64	132.90
Environmental Scientist II	39.00	72.35	11.70	123.05
Environmental Scientist I	35.00	64.93	10.50	110.43
Senior Planner	64.02	118.77	19.21	202.00
Lead Planner	62.00	115.02	18.60	195.62
Planner III	59.96	111.24	17.99	189.19
Planner II	45.00	83.48	13.50	141.98
Planner I	32.00	59.37	9.60	100.97
Lead Tech/ Designer	71.16	132.02	21.35	224.52
Technician III	40.17	74.52	12.05	126.74
Technician II	35.00	64.93	10.50	110.43
Technician I	29.00	53.80	8.70	91.50
Senior Office Engineer	63.00	116.88	18.90	198.78
Senior Construction Technician	60.32	111.91	18.10	190.32
Construction Tech III	53.56	99.36	16.07	168.99
Construction Tech II	40.17	74.52	12.05	126.74
Construction Tech I	37.85	70.22	11.36	119.42
Construction Engineer III	60.00	111.31	18.00	189.31
Construction Specialist II	49.70	92.20	14.91	156.81
Construction Specialist I	42.00	77.92	12.60	132.52
Senior Construction Observer	72.00	133.57	21.60	227.17
Construction Observer III	67.60	125.41	20.28	213.29
Construction Observer II	45.32	84.08	13.60	142.99
Construction Observer I	43.50	80.70	13.05	137.25
Electrical Construction Observer	75.00	139.14	22.50	236.64
Senior Construction Manager	84.00	155.84	25.20	265.04
Construction Manager	75.00	139.14	22.50	236.64
Assistant Construction Manager	68.00	126.15	20.40	214.55
Construction Engineering Manager	85.00	157.69	25.50	268.19
Construction Supervisor	92.19	171.03	27.66	290.88
Network Specialist	48.31	89.62	14.49	152.43
Controller	75.92	140.85	22.78	239.54
Contract Administrator	81.00	150.27	24.30	255.57
Project Assistant	51.50	95.54	15.45	162.49
Accountant	61.95	114.93	18.59	195.46
Clerical	39.64	73.54	11.89	125.07
Marketing Director	75.92	140.85	22.78	239.54
Graphics Specialist	51.45	95.45	15.44	162.34

Classification Title Changes - In order to specifically adhere to the experience requirements in RCW 18.43.040 relating to engineering registration, we are revising the following classifications:

- Engineer I/II is now Civil Designer I/II
- Construction Engineer I/II is now Construction Specialist I/II

Direct (Non-Salary) Reimbursable Expenses

GIS/Traffic Modeling	$15 per hr.
Color Copies	$.80 ea.
Mileage	@ current federal rate
Authorized Subconsultants	At Cost

Invoiced direct labor may be less than the maximum rate shown per job classification but will not exceed the maximum rate. Rates are subject to renegotiation annually from the anniversary of contract execution unless otherwise specified.

Docusign Envelope ID: 82A98ACD-A851-42FA-B853-54AF753D39FB

Washington State Department of Transportation

Development Division
Contract Services Office
PO Box 47408
Olympia, WA 98504-7408
7345 Linderson Way SW
Tumwater, WA 98501-6504

TTY: 1-800-833-6388
www.wsdot.wa.gov

June 18, 2025

Perteet, Inc
2707 Colby Avenue, Suite 900
Everett, WA 98201

Subject: Acceptance FYE 2024 ICR – CPA Report

Dear Denice M. Moan:

We have accepted your firm's FYE 2024 Indirect Cost Rate (ICR) of 185.52% of direct labor (rate includes 0.38% Facilities Capital Cost of Money) based on the "Independent CPA Report" prepared by Stambaugh Ness, Inc. This rate will be applicable for WSDOT Agreements and Local Agency Contracts in Washington only. This rate may be subject to additional review if considered necessary by WSDOT. Your ICR must be updated on an annual basis.

Costs billed to agreements/contracts will still be subject to audit of actual costs, based on the terms and conditions of the respective agreement/contract.

This was not a cognizant review. Any other entity contracting with the firm is responsible for determining the acceptability of the ICR.

If you have any questions, feel free to contact our office at **(360) 704-6397** or via email **consultantrates@wsdot.wa.gov**.

Regards,

Schatzie Harvey
Schatzie Harvey (Jun 18, 2025 12:44 PDT)
SCHATZIE HARVEY, CPA
Contract Services Manager

SH: kb

Docusign Envelope ID: 82A98ACD-A851-42FA-B853-54AF753D39FB

EXHIBIT E-1

Negotiated Hourly Rate Sheet
Subconsultant: **Commonstreet**
Prime: Perteet, Inc.

City of Mountlake Terrace
Main St. Revitalization Phase 2, 56th Avenue W. (20230184)

		Overhead:	Fixed Fee:	
		121.85%	30.00%	
Job Classification	**Direct Labor (DL)**	**Overhead (OH x DL)**	**Fixed Fee % (Fee x DL)**	**All Inclusive Hourly Rate**
Principal/Senior Advisor/Program Manager	125.00	152.31	37.50	314.81
Senior Project Manager	99.00	120.63	29.70	249.33
Project Manager / Property Manager	87.00	106.01	26.10	219.11
Senior Right of Way Agent	81.00	98.70	24.30	204.00
Right of Way Agent	50.00	60.93	15.00	125.93
Sr Project Control Specialist/Sr ROW Technician	68.00	82.86	20.40	171.26
Project Control Specialist/ROW Technician	51.00	62.14	15.30	128.44

Invoiced direct labor may be less than the maximum rate shown per job classification but will not exceed the maximum rate. Rates are subject to renegotiation annually from the anniversary of contract execution unless otherwise specified.

Docusign Envelope ID: 82A98ACD-A851-42FA-B853-54AF753D39FB

Washington State Department of Transportation

Development Division
Contract Services Office
PO Box 47408
Olympia, WA 98504-7408
7345 Linderson Way SW
Tumwater, WA 98501-6504

TTY: 1-800-833-6388
www.wsdot.wa.gov

April 28, 2025

Commonstreet Consulting, LLC
100 S King Street, Ste. 100
Seattle, WA 98104

Subject: Acceptance FYE 2024 ICR – Audit Office Review

Dear Melinda Diaz:

Transmitted herewith is the WSDOT Audit Office's memo of "Acceptance" of your firm's FYE 2024 Indirect Cost Rate (ICR) of 121.85% of direct labor. This rate will be applicable for WSDOT Agreements and Local Agency Contracts in Washington only. This rate may be subject to additional review if considered necessary by WSDOT. Your ICR must be updated on an annual basis.

Costs billed to agreements/contracts will still be subject to audit of actual costs, based on the terms and conditions of the respective agreement/contract.

This was not a cognizant review. Any other entity contracting with your firm is responsible for determining the acceptability of the ICR.

If you have any questions, feel free to contact our office at **(360) 704-6397** or via email **consultantrates@wsdot.wa.gov**.

Regards,

Schatzie Harvey
Schatzie Harvey (Apr 29, 2025 06:32 PDT)

SCHATZIE HARVEY, CPA
Contract Services Manager

SH:kb

Docusign Envelope ID: 82A98ACD-A851-42FA-B853-54AF753D39FB

EXHIBIT E-1

Negotiated Hourly Rate Sheet
Subconsultant: **Concord Engineering**
Prime: Perteet, Inc.

City of Mountlake Terrace
Main St. Revitalization Phase 2, 56th Avenue W. (20230184)

		Overhead:	Fixed Fee:	
		105.30%	30.00%	
Job Classification	**Direct Labor (DL)**	**Overhead (OH x DL)**	**Fixed Fee % (Fee x DL)**	**All Inclusive Hourly Rate**
Senior Engineer 8	108.00	113.72	32.40	254.12
Senior Engineer 7	102.00	107.41	30.60	240.01
Senior Engineer 6	95.00	100.04	28.50	223.54
Senior Engineer 5	92.00	96.88	27.60	216.48
Senior Engineer 4	85.00	89.51	25.50	200.01
Senior Engineer 3	82.00	86.35	24.60	192.95
Senior Engineer 2	78.00	82.13	23.40	183.53
Senior Engineer 1	72.00	75.82	21.60	169.42
Associate Engineer 6	68.00	71.60	20.40	160.00
Associate Engineer 5	65.00	68.45	19.50	152.95
Associate Engineer 4	64.00	67.39	19.20	150.59
Associate Engineer 3	62.00	65.29	18.60	145.89
Associate Engineer 2	56.00	58.97	16.80	131.77
Associate Engineer 1	53.00	55.81	15.90	124.71
Assistant Engineer 5	51.00	53.70	15.30	120.00
Assistant Engineer 4	49.00	51.60	14.70	115.30
Assistant Engineer 3	47.00	49.49	14.10	110.59
Assistant Engineer 2	44.00	46.33	13.20	103.53
Assistant Engineer 1	42.00	44.23	12.60	98.83
Project Accountant 3	38.00	40.01	11.40	89.41
Project Coordinator 3	38.00	40.01	11.40	89.41
Assistant Engineer 3	47.00	49.49	14.10	110.59
Assistant Engineer 2	44.00	46.33	13.20	103.53
Assistant Engineer 1	42.00	44.23	12.60	98.83
Project Accountant 3	38.00	40.01	11.40	89.41
Project Coordinator 3	38.00	40.01	11.40	89.41

Note: Invoiced DL may be less than the maximum rate shown per job classification but will not exceed the maximum rate.
Rates are subject to renegotiation upon the one year anniversary of contract execution.

Docusign Envelope ID: 82A98ACD-A851-42FA-B853-54AF753D39FB

Washington State Department of Transportation

Development Division
Contract Services Office
PO Box 47408
Olympia, WA 98504-7408
7345 Linderson Way SW
Tumwater, WA 98501-6504

TTY: 1-800-833-6388
www.wsdot.wa.gov

June 30, 2025

Concord Engineering, Inc
2285 116th Ave NE
Bellevue WA 98004

Subject: Acceptance FYE 2024 ICR – Risk Assessment Review

Dear Irene Yang:

Based on Washington State Department of Transportation's (WSDOT) Risk Assessment review of your Indirect Cost Rate (ICR), we have accepted your proposed FYE 2024 ICR of 105.30% of direct labor. This rate will be applicable for WSDOT Agreements and Local Agency Contracts in Washington only. This rate may be subject to additional review if considered necessary by WSDOT. Your ICR must be updated on an annual basis.

Costs billed to agreements/contracts will still be subject to audit of actual costs, based on the terms and conditions of the respective agreement/contract.

This was not a cognizant review. Any other entity contracting with your firm is responsible for determining the acceptability of the ICR.

If you have any questions, feel free to contact our office at **(360) 704-6397** or via email **consultantrates@wsdot.wa.gov**.

Regards,

Schatzie Harvey
Schatzie Harvey (Jun 30, 2025 13:04 PDT)
SCHATZIE HARVEY, CPA
Contract Services Manager

SH: kb

Docusign Envelope ID: 82A98ACD-A851-42FA-B853-54AF753D39FB

EXHIBIT E-1

Negotiated Hourly Rate Sheet
Subconsultant: **HWA GeoSciences, Inc**
Prime: Perteet, Inc.

City of Mountlake Terrace
Main St. Revitalization Phase 2, 56th Avenue W. (20230184)

		Overhead:	Fixed Fee:	
		179.28%	30.00%	
Job Classification	**Direct Labor (DL)**	**Overhead (OH x DL)**	**Fixed Fee % (Fee x DL)**	**All Inclusive Hourly Rate**
Principal IX	110.00	197.21	33.00	340.21
Principal VIII	98.00	175.69	29.40	303.09
Hydrogeologist IV	60.00	107.57	18.00	185.57
Geotechnical Engineer VII	90.00	161.35	27.00	278.35
Geotechnical Engineer V	67.00	120.12	20.10	207.22
Geotechnical Engineer II	43.00	77.09	12.90	132.99
Contracts Administrator	53.00	95.02	15.90	163.92
CAD	36.00	64.54	10.80	111.34
Administrative Support	38.00	68.13	11.40	117.53

Note: Invoiced DL may be less than the maximum rate shown per job classification but will not exceed the maximum rate.
Rates are subject to renegotiation upon the one year anniversary of contract execution.

Docusign Envelope ID: 82A98ACD-A851-42FA-B853-54AF753D39FB

Washington State Department of Transportation

Development Division
Contract Services Office
PO Box 47408
Olympia, WA 98504-7408
7345 Linderson Way SW
Tumwater, WA 98501-6504

TTY: 1-800-833-6388
www.wsdot.wa.gov

July 2, 2025

HWA GeoSciences, Inc
21312 30th Dr SE, Suite 110
Bothell, WA 98021

Subject: Acceptance FYE 2024 ICR – CPA Report

Dear Vasiliy P. Babko:

We have accepted your firm's FYE 2024 Indirect Cost Rate (ICR) of 179.28% of direct labor (rate includes 0.96% Facilities Capital Cost of Money) based on the "Independent CPA Report" prepared by T-MAX, CPA. This rate will be applicable for WSDOT Agreements and Local Agency Contracts in Washington only. This rate may be subject to additional review if considered necessary by WSDOT. Your ICR must be updated on an annual basis.

Costs billed to agreements/contracts will still be subject to audit of actual costs, based on the terms and conditions of the respective agreement/contract.

This was not a cognizant review. Any other entity contracting with the firm is responsible for determining the acceptability of the ICR.

If you have any questions, feel free to contact our office at **(360) 704-6397** or via email **consultantrates@wsdot.wa.gov**.

Regards,

Schatzie Harvey
Schatzie Harvey (Jul 3, 2025 07:03 PDT)
SCHATZIE HARVEY, CPA
Contract Services Manager

SH: kb

Docusign Envelope ID: 82A98ACD-A851-42FA-B853-54AF753D39FB

EXHIBIT E-1

Negotiated Hourly Rate Sheet
Subconsultant: **Osborn Consulting**
Prime: Perteet, Inc.

City of Mountlake Terrace
Main St. Revitalization Phase 2, 56th Avenue W. (20230184)

		Overhead:	Fixed Fee:	
		166.02%	30.00%	
Job Classification	**Direct Labor (DL)**	**Overhead (OH x DL)**	**Fixed Fee % (Fee x DL)**	**All Inclusive Hourly Rate**
Principal	103.00	171.00	30.90	304.90
Senior QC	86.00	142.78	25.80	254.58
Senior Project Manager	78.00	129.50	23.40	230.90
Senior Engineer	72.00	119.53	21.60	213.13
Project Engineer	62.00	102.93	18.60	183.53
Project Landscape Architect	60.00	99.61	18.00	177.61
Design Engineer	55.00	91.31	16.50	162.81
Engineer I	41.00	68.07	12.30	121.37
Engineering Technician II	37.00	61.43	11.10	109.53
CADD Manager	64.00	106.25	19.20	189.45
Senior CADD Designer	52.00	86.33	15.60	153.93
CADD Tech	40.00	66.41	12.00	118.41
Graphic Design	60.00	99.61	18.00	177.61
Senior Administration	62.00	102.93	18.60	183.53
Technical Editor	49.00	81.35	14.70	145.05
Administration	42.00	69.73	12.60	124.33

Note: Invoiced DL may be less than the maximum rate shown per job classification but will not exceed the maximum rate.
Rates are subject to renegotiation upon the one year anniversary of contract execution.

Docusign Envelope ID: 82A98ACD-A851-42FA-B853-54AF753D39FB

Washington State Department of Transportation

Development Division
Contract Services Office
PO Box 47408
Olympia, WA 98504-7408
7345 Linderson Way SW
Tumwater, WA 98501-6504

TTY: 1-800-833-6388
www.wsdot.wa.gov

August 1, 2025

Osborn Consulting, Inc.
1800 112th Avenue NE, Suite 220E
Bellevue, WA 98004

Subject: Acceptance FYE 2024 ICR – CPA Report

Dear Megan Isaacks:

We have accepted your firm's FYE 2024 Indirect Cost Rate (ICR) of 166.02% of direct labor (rate includes 0.16% Facilities Cost of Capital) based on the "Independent CPA Report" prepared by DL Purvine, CPA, PLLC's. This rate will be applicable for WSDOT Agreements and Local Agency Contracts in Washington only. This rate may be subject to additional review if considered necessary by WSDOT. Your ICR must be updated on an annual basis.

Costs billed to agreements/contracts will still be subject to audit of actual costs, based on the terms and conditions of the respective agreement/contract.

This was not a cognizant review. Any other entity contracting with the firm is responsible for determining the acceptability of the ICR.

If you have any questions, feel free to contact our office at **(360) 704-6397** or via email **consultantrates@wsdot.wa.gov**.

Regards,

Schatzie Harvey
Schatzie Harvey (Aug 4, 2025 10:35:51 PDT)
SCHATZIE HARVEY, CPA
Contract Services Manager

SH: ah

Docusign Envelope ID: 82A98ACD-A851-42FA-B853-54AF753D39FB

EXHIBIT E-1

Negotiated Hourly Rate Sheet
Subconsultant: **Psomas (formerly KPG Psomas)**
Prime: Perteet, Inc.

City of Mountlake Terrace
Main St. Revitalization Phase 2, 56th Avenue W. (20230184)

		Overhead:	Fixed Fee:	
		176.66%	30.00%	
Job Classification	**Direct Labor (DL)**	**Overhead (OH x DL)**	**Fixed Fee % (Fee x DL)**	**All Inclusive Hourly Rate**
Senior Project Manager Survey	96.35	170.21	28.91	295.00
Survey Crew I (w/Equip)	77.70	137.26	23.31	238.00
Survey Crew II (w/Equip)	98.70	174.36	29.61	303.00
Field Surveyor I	37.80	66.78	11.34	116.00
Field Surveyor II	49.35	87.18	14.81	151.00
Field Surveyor III	56.24	99.35	16.87	172.00
Project Surveyor I	57.75	102.02	17.33	177.00
Project Surveyor II	65.42	115.57	19.63	201.00
Surveyor I	34.65	61.21	10.40	106.00
Surveyor II	47.25	83.47	14.18	145.00
Surveyor III	54.34	96.00	16.30	167.00
Office Assistant	40.11	70.86	12.03	123.00

Note: Invoiced DL may be less than the maximum rate shown per job classification but will not exceed the maximum rate.
Rates are subject to renegotiation upon the one year anniversary of contract execution.

Docusign Envelope ID: 82A98ACD-A851-42FA-B853-54AF753D39FB

Washington State Department of Transportation

Development Division
Contract Services Office
PO Box 47408
Olympia, WA 98504-7408
7345 Linderson Way SW
Tumwater, WA 98501-6504

TTY: 1-800-833-6388
www.wsdot.wa.gov

August 4, 2025

Psomas
3131 Elliot Avenue, Suite 400
Seattle, WA 98121

Subject: Acceptance FYE 2024 ICR – CPA Report

Dear Tracy Zucker:

We have accepted your firm's FYE 2024 Indirect Cost Rate (ICR) of 176.66% of direct labor based on the "Independent CPA Report" prepared by KCOE ISOM, LLP. This rate will be applicable for WSDOT Agreements and Local Agency Contracts in Washington only. This rate may be subject to additional review if considered necessary by WSDOT. Your ICR must be updated on an annual basis.

Costs billed to agreements/contracts will still be subject to audit of actual costs, based on the terms and conditions of the respective agreement/contract.

This was not a cognizant review. Any other entity contracting with the firm is responsible for determining the acceptability of the ICR.

If you have any questions, feel free to contact our office at **(360) 704-6397** or via email **consultantrates@wsdot.wa.gov**.

Regards,

Schatzie Harvey
Schatzie Harvey (Aug 4, 2025 10:27:33 PDT)
SCHATZIE HARVEY, CPA
Contract Services Manager

SH: kb

Docusign Envelope ID: 82A98ACD-A851-42FA-B853-54AF753D39FB

EXHIBIT E-1

Negotiated Hourly Rate Sheet
Subconsultant: **Toole Design**
Prime: Perteet, Inc.

City of Mountlake Terrace
Main St. Revitalization Phase 2, 56th Avenue W. (20230184)

		Overhead:	Fixed Fee:	
		177.35%	30.00%	
Job Classification	**Direct Labor (DL)**	**Overhead (OH x DL)**	**Fixed Fee % (Fee x DL)**	**All Inclusive Hourly Rate**
Engineering Lead II	96.00	170.26	28.80	295.00
Engineering Lead I	84.00	148.97	25.20	258.00
Project Engineer II	65.00	115.28	19.50	200.00
Project Engineer	62.00	109.96	18.60	191.00
Engineer II	48.00	85.13	14.40	148.00
Engineer 1	43.00	76.26	12.90	132.00
Senior Planner	72.00	127.69	21.60	221.00
Senior Landscape Architect	65.00	115.28	19.50	200.00
Landscape Architecture Lead	81.00	143.65	24.30	249.00

Note: Invoiced DL may be less than the maximum rate shown per job classification but will not exceed the maximum rate.
Rates are subject to renegotiation upon the one year anniversary of contract execution.

Docusign Envelope ID: 82A98ACD-A851-42FA-B853-54AF753D39FB

Washington State Department of Transportation

Development Division
Contract Services Office
PO Box 47408
Olympia, WA 98504-7408
7345 Linderson Way SW
Tumwater, WA 98501-6504

TTY: 1-800-833-6388
www.wsdot.wa.gov

July 16, 2025

Toole Design Group, LLC and Subsidiary and Affliates
8484 Georgia Avenue, Suite 800
Silver Springs, MD 2091

Subject: Acceptance FYE 2024 ICR – CPA Report

Dear Hilda Sun:

We have accepted your firm's FYE 2024 Indirect Cost Rate (ICR) of 177.35% of direct labor (rate includes 0.09% Facilities Capital Cost of Money) based on the "Independent CPA Report" prepared by Stambaugh Ness. This rate will be applicable for WSDOT Agreements and Local Agency Contracts in Washington only. This rate may be subject to additional review if considered necessary by WSDOT. Your ICR must be updated on an annual basis.

Costs billed to agreements/contracts will still be subject to audit of actual costs, based on the terms and conditions of the respective agreement/contract.

This was not a cognizant review. Any other entity contracting with the firm is responsible for determining the acceptability of the ICR.

If you have any questions, feel free to contact our office at **(360) 704-6397** or via email **consultantrates@wsdot.wa.gov**.

Regards,

Schatzie Harvey
Schatzie Harvey (Jul 16, 2025 12:59 PDT)

SCHATZIE HARVEY, CPA
Contract Services Manager

SH: kb

Docusign Envelope ID: D48BA7C5-D0D5-431E-B20B-2A6FD2626196

CITY OF MOUNTLAKE TERRACE

Supplement 4 **Main Street Phase 2 & 3 Agreement**	Organization Name and Address: **Perteet, Inc.** **2707 Colby Ave, Ste 900** **Everett, WA 98201**	
Original Agreement Number: N/A	Execution Date: 02/01/2024	Completion Date: 12/31/2026
Project Title Main Street Phase 2 & 3	Original Amount Authorized: Management Reserve: Amount Previous Supplements: Amount This Supplement: **New Maximum Amount Payable:**	$2,883,050.00 $200,000.00 $244,913.00 $137,121.00 **$3,265,084.00**
Description of Work: **NEPA support and Geotechnical Exploration-BIT and PIT**		

The City of Mountlake Terrace desires to supplement the agreement with and executed on 02/01/2024.

All provisions in the basic agreement remain in effect except as expressly modified by this and previous supplements.

The changes to the agreement are described as follows:

II

General Scope of Work, shall be amended to include additional Exhibit A, Scope of Work.

III

Section V, Payment Provisions, shall be amended to include new Exhibit D and E, Prime Consultant Cost Computations.

If you concur with this supplement and agree to the changes as stated above, please sign in the appropriate space below and return to this office for final action.

By: Perteet, Inc.		By: City of Mountlake Terrace	
Jesse A Thomsen	1/28/2025	Jeff Niten	1/28/2025
Jesse Thomsen, PE	Date	Jeff Niten, City Manager	Date

Docusign Envelope ID: D48BA7C5-D0D5-431E-B20B-2A6FD2626196

SCOPE OF WORK
City of Mountlake Terrace
Main Street Revitalization, Phases 2 and 3
Amendment 4
NEPA support and Geotechnical Exploration-BIT and PIT

STATEMENT OF PURPOSE

The current scope of this project is to rehabilitate 56th Avenue W, as well as 232nd Street SW and 234th Street SW. This includes the complete design of the roadway rehabilitation, including base repair and complete pavement reconstruction in asphalt concrete pavement, curb ramp upgrades/replacements, bike lanes, traffic signal reconfiguration, lighting design, drainage improvements required to meet the current drainage code, grading, utility adjustments, sidewalk replacement, tree pits, and other related items.

The City of Mountlake Terrace (City) has requested support for re-applying for NEPA reclassification. The previous NEPA permitting has lapsed, and the effort required includes coordination with WSDOT, and writing environmental permitting documentation. This work is expected to include:

- Coordination with WSDOT Local Programs
- BA assessment
- Cultural resources update
- Endangered Species review
- Drainage coordination

In support of the environmental documentation, additional geotechnical exploration in the support of infiltration analysis is needed. This work is expected to include:

- Geotechnical testing for Borehole Infiltration Tests (BITs)
- Geotechnical testing for Pilot Infiltration Tests (PITs)
- Associated geotechnical reports

This amendment outlines the additional design efforts, supplemental services, and coordination required to achieve the City's project goals at the 100% submittal. The scope of work for Task 7.3 is supplemented with the following scope.

Task 1 – Project Management

Docusign Envelope ID: D48BA7C5-D0D5-431E-B20B-2A6FD2626196

The additional work has increased coordination for disciplines, as well as expected bid time for the project. This has increased the amount of time needed for project management to coordinate efforts to complete tasks.

Assumptions:

- Additional coordination with Geotech/city
- Coordination for NEPA re-certification

Task 15 - Environmental Permitting Support (Supplemented)

The Consultant will complete elements of environmental documentation for the National Environmental Policy Act (NEPA) under the tasks below. Tasks as designated will be optional and may be completed if requested by WSDOT and necessary for the NEPA CE process.

15.1 Updated NEPA CE Form and Summary Memo to facilitate WSDOT Re-Evaluation

A prior NEPA CE form was approved by WSDOT and FHWA in 2015. Phase 1 was built and Phase 2 is the current action. NEPA and ROW were completed for the corridor. NEPA will need to be re-evaluated for Phase 2 due to lapsed time.

An updated CE form will be prepared for the project. The updated WSDOT CE form will be completed with supporting information obtained from current project information or other available information to represent the updated project and to compare changes with the prior approved NEPA CE information. Information will be evaluated, and a Change Summary Memo will be prepared to list and describe any changes from the prior NEPA approval to the current project. Updated recent stormwater information was provided to WSDOT in November/December 2024 to preliminarily evaluate endangered species effect considerations for a no-effect consideration:

Assumptions:

- The Consultant will prepare and submit a Change Summary Memo and updated CE Form to WSDOT after review with the project team to consider NEPA environmental classification and current conditions based on design information and readily available environmental resources databases to consider project environmental context. October 2022 WSDOT CE Form is understood to be current.
- A draft and final CE form will be provided to Client in electronic format via email for one consolidated Client review and provision of comments before final submittal to WSDOT if requested by WSDOT. WSDOT may also not retire the final CE form as it is up to their discretion for the NEPA. Regardless the CE form will be prepared to show WSDOT the information of the current project compared to the prior approved CE.
- An Endangered Species Act No-Effect determination is assumed with provided stormwater documentation and understanding that no net new pollutant generating impervious surface will be proposed. Documentation will be summarized on the CE form and no biological assessment or supplemental documentation is assumed.

Docusign Envelope ID: D48BA7C5-D0D5-431E-B20B-2A6FD2626196

- Environmental Justice (EJ) and Cultural Resources may require supplemental documentation or updated studies and data if requested by WSDOT after the CE form and change summary has been submitted. Those work elements are listed below in subtasks as Optional Services if required by WSDOT.
- The project is not assumed to require preparation of hazmat analysis, 4(f)/6(f) analysis, noise, or other related technical memos or discipline studies not addressed in this scope of work. If other analysis becomes required by WSDOT or other agencies during the course of review, those requirements will be assessed and items scoped under a supplemental task and fee if required.
- A virtual meeting will be requested with WSDOT Local Programs and key project team staff to review the change summary and CE comparison to determine the need for any further documentation and timeline for approval of the CE re-evaluation. One item of consideration to be clarified is that 232nd and 234 ST SW was not included in the description of the original NEPA CE authorization.

Deliverables:

- Draft and final updated CE Form
- Change Summary Memo to WSODT for NEPA Re-Evaluation
- WSDOT correspondence

15.2 Updated Cultural Resources Assessment

CE re-evaluation requires updated or expanded cultural resources documentation, and APE memo and following updated cultural resources information may be provided.

15.2.1 APE Memo and WSDOT Support

For CE re-evaluation, preparation of an Area of Potential Effects (APE) Memorandum for the updated improvements will be provided, including a brief memorandum describing the project, proposed direct and indirect effects, and a map that shows the boundaries of those potential effects. The memorandum will be prepared in coordination with City and WSDOT for submission to Section 106 consulting parties, including SHPO, FHWA, and Affected Tribes. Services included in this task include review of project specifications, available geotechnical information, preliminary review of background information on the natural and cultural setting of the project, drafting and producing the APE memorandum and map, and completing revisions of the draft that may be needed to prepare a final APE memorandum.

Assumptions:

- The entire APE will be accessible for the field survey.

Docusign Envelope ID: D48BA7C5-D0D5-431E-B20B-2A6FD2626196

- The City will provide one (1) consolidated review on the draft APE prior to being finalized by the Consultant team for WSDOT submittal.

Deliverables:
- Draft and Final APE (PDF)

15.2.2 Cultural Resources Field Survey

The Consultant will conduct a pedestrian survey of the updated APE if required. If areas free of impervious surfaces and buried utilities are identified, up to five (5) shovel probes will be hand excavated. If no such areas are observed, no shovel probes will be excavated. If archaeological material is encountered, it will be documented to the extent feasible at the time of the survey. However, no artifacts or other material will be collected.

Assumptions:
- No historical structures will be recorded or evaluated
- Notes and photographs from archaeological survey will be used to prepare deliverable under the reporting subtask.
- If an archaeological resource is identified during the field survey, it will be documented to the extent allowed by survey data. Preparation of up to one (1) archaeological site inventory form is included in this scope. Additional site forms, boundary definition, significance testing, or development of a treatment plan would be conducted under separate scope/cost.

Deliverables:
- Documentation and NRHP eligibility evaluation of up to one (1) archaeological material.

15.2.3 Background Research and Reporting

If additional survey is required, a technical report that meets WSDOT, federal, and SHPO/DAHP standards will be completed that describes the APE, its natural and cultural setting, field survey methods and results, and evaluations of the significance of and project effects on specific resources identified during the survey. If an archaeological resource is identified during the survey, it will be documented on a standard Washington State Archaeological Site or Isolate inventory form and appended to the report. One (1) internal draft report will be prepared and submitted electronically for review. One (1) final draft will be submitted to reviewing agencies. One (1) final version will be prepared based on reviewer comments and submitted electronically as a PDF document.

Assumptions:
- The City will provide one (1) consolidated review on the draft CRA prior to being finalized by the Consultant team for WSDOT submittal.

Docusign Envelope ID: D48BA7C5-D0D5-431E-B20B-2A6FD2626196

- The CRA will be used for the NEPA re-evaluation action.

Deliverables:

- Draft and Final CRA (PDF)

15.4 Updated Environmental Justice (EJ) Memo (Optional Service)

If required for CE re-evaluation, the Consultant will prepare an Environmental Justice (EJ) memo utilizing updated census data and currently available school data and other available updated information. This screening level analysis will identify any concentrations of low income and minority populations in the context of the project action for NEPA review. The analysis will identify if there is any potential for disproportionately adverse effects/impacts on identified low income and minority populations.

Assumptions:

- If additional analysis beyond this scope for Environmental Justice is requested during WSDOT review, such work will be considered as an additional service beyond this scope of work and will necessitate a supplemental scope and fee.
- Title VI requirements for any for any EJ actions would be coordinated, conducted, and documented by the City.

Deliverables:

- Draft and final EJ Memo in electronic format for Client review before submittal to WSDOT.
- Production and submittal of EJ Memo and supporting documents to WSDOT and resubmittal to address minor comments.

Task 16 – Geotechnical Exploration (AMENDED)

Geotechnical Field Explorations – Borehole Infiltration Tests (BITs)
Project Management
Consultant Team Meetings: HWA will meet with the City and/or design team to present our findings and discuss the geotechnical implications of our findings. We have assumed a maximum of one (1) virtual meeting, no more than 1 hour in length.
Geotechnical Field Explorations
Plan Geotechnical Exploration Program: HWA will plan and coordinate a geotechnical exploration program. The program will consist of completing:
Five (5) Boring Infiltration Tests (BITs) along 234th Street SW and 56th Avenue W
Conduct Utility Locates for Geotechnical Explorations: Prior to generation of our geotechnical work plan, HWA will mark the proposed exploration locations and arrange for utility locates using the Utility Notification Center. Utility location marks will be used to verify proposed exploration locations prior to development of traffic control plans.
Second Utility Locates Site Visit: HWA will make an additional site visit to verify that the proposed locations of the explorations are clear of utilities prior to finalizing the exploration

Docusign Envelope ID: D48BA7C5-D0D5-431E-B20B-2A6FD2626196

plans and mobilizing any exploration equipment. Additionally, HWA will engage a private locating service to have conductible underground utilities located in the vicinity of the proposed BITs. Non-conductible utilities (e.g., PVC and concrete pipe) cannot be located by the private locating service.

Generate Exploration Work Plan Memorandum: HWA will prepare a Geotechnical Work Plan Memorandum. The work plan will be submitted to the City for review and approval. The work plan will detail the type, location, and testing locations along with logistics necessary to perform the work such as traffic control plans and staging areas. We assume the required permits or rights of entries will be provided at no cost to HWA.

Coordinating Permits: HWA will coordinate all required Right-of-Way permits with the City for the geotechnical exploration program. This will include developing traffic control plans required for completion of work. Rights-of-Entry, if required, will be provided to HWA prior to mobilization of any exploration equipment.

Complete Borehole Infiltration Testing (BIT): HWA will complete boring infiltration testing at five (5) locations along the 234th Street SW and 56th Avenue W corridor to evaluate infiltration rates at a depth of 20 feet below ground surface. Exact locations will be determined after utility locations and access is determined.

All borings will be completed using a truck-mounted hollow stem auger drill rig. HWA assumes that BITs will take three (3) working days to complete. HWA assumes that traffic control will be required for all testing locations and will consist of a temporary single lane closure with flaggers. HWA has assumed that all work will be completed during typical workdays and work hours.

Each of the above-described geotechnical explorations will be logged by an HWA representative.

Generate Exploration Logs and Assign Laboratory Testing: HWA will prepare summary exploration logs for each exploration and perform laboratory testing to evaluate relevant physical properties of select soil samples. Depending on the type of soils encountered, laboratory testing could include determination of moisture content, grain-size distribution, and Atterberg Limits. Cation Exchange Capacity (CEC) and organic content testing will be completed on soil samples from the infiltration testing explorations.

Geotechnical Design

Infiltration Analysis: HWA will utilize data collected from infiltration testing to select an appropriate design infiltration rate for the subsurface soil in the project area.

HWA QA/QC: HWA will have all design calculations and recommendations reviewed by a senior principal prior to distribution to the design team and the City.

Incorporate Into Draft Geotechnical Report: HWA will incorporate the findings of our BITs into the previously prepared draft geotechnical report for the project. This report will contain the results of the subsurface exploration program, including logs, laboratory test results, and a description of surface and subsurface conditions; a site plan showing exploration locations and other pertinent features; and geotechnical engineering recommendations for the design and construction of the proposed improvements.

Deliverables:

Docusign Envelope ID: D48BA7C5-D0D5-431E-B20B-2A6FD2626196

- Subsurface Exploration Work Plan Memorandum.
- Updated draft Geotechnical Report

Assumptions:

- The geotechnical explorations proposed herein will not be used to assess site environmental conditions. However, visual or olfactory observations regarding potential contamination will be noted. Analysis, testing, storage, and handling of potentially contaminated soil and groundwater (either sampled or spoils from drilling) are beyond this scope of services. If contaminated soils and/or groundwater are encountered, the material will be properly contained on-site for disposal as mutually agreed upon without additional cost to HWA.
- All non-contaminated drilling spoils and related debris produced by the explorations will be drummed on site and transported off site for proper disposal by the drilling subcontractor.
- Explorations and testing will be completed in three (3) days. All field work including site reconnaissance, utility locates, and drilling will be accomplished during normal daylight workdays and hours, with at least a minimum 8 hours available per day.
- Utility locates, via the One-Call Utility Locate Center, will be comprehensive and accurate enough to allow reliable and safe location of borings. Vacuum extraction of the upper portion of boreholes is not included.
- All borings will be conducted within the City ROW and in areas outside of active travel lanes.
- HWA assumes no concrete pavement is present below the surface asphalt and assumes that coring will not be required prior to drilling the proposed borings.
- Any work to be completed extending through pavement will be located in adjacent parking lots or parking strips. Rehabilitation of pavement upon completion of geotechnical borings will require cold-patch asphalt or quick-set concrete. No saw cutting of pavement, hot mix asphalt or borings drilled through cement concrete pavement will be required. Pavement design will not be completed as part of this scope and any pavement work will consist of rehabilitation based on City standards.
- HWA assumes traffic control will consist of a temporary single lane closure, with flaggers, for all explorations.
- All required street use permits will be provided by others at no cost to HWA.
- All required rights-of-entry will be provided by others at no cost to the HWA.
- Exploration locations will be located using handheld GPS and measurement from existing known features.
- Following finalization of the geotechnical report, all soil samples will be disposed. Long-term storage of soil samples by HWA is not included.
- A site survey will be provided to HWA in support of design recommendations.
- HWA assumes that if any proposed exploration is near an existing tree, the City will determine if it is intended to be removed during construction or if it will remain. If it is to remain, the City will provide an arborist to determine if the exploration could impact the tree’s critical root zone.

Docusign Envelope ID: D48BA7C5-D0D5-431E-B20B-2A6FD2626196

- Geotechnical Field Explorations – Pilot Infiltration Tests (PITs) AS NEEDED
- Project Management
- Consultant Team Meetings: HWA will meet with the City and/or design team to present our findings and discuss the geotechnical implications of our findings. We have assumed a maximum of one (1) virtual meeting, no more than 1 hour in length.

Geotechnical Field Explorations
Plan Geotechnical Exploration Program: HWA will plan and coordinate a geotechnical exploration program. The program will consist of completing:

- Six (6) Pilot Infiltration Tests (PITs) along the 234th Street SW and 56th Avenue W corridor and at the intersection of 232nd Street SW and 58th Avenue W.

Conduct Utility Locates for Geotechnical Explorations: Prior to generation of our geotechnical work plan, HWA will mark the proposed exploration locations and arrange for utility locates using the Utility Notification Center. Utility location marks will be used to verify proposed exploration locations prior to development of traffic control plans.
Second Utility Locates Site Visit: HWA will make an additional site visit to verify that the proposed locations of the explorations are clear of utilities prior to finalizing the exploration plans and mobilizing any exploration equipment. Additionally, HWA will engage a private locating service to have conductible underground utilities located in the vicinity of the proposed PITs. Non-conductible utilities (e.g., PVC and concrete pipe) cannot be located by the private locating service.

Generate Exploration Work Plan Memorandum: HWA will prepare a Geotechnical Work Plan Memorandum. The work plan will be submitted to the City for review and approval. The work plan will detail the type, location, and testing locations along with logistics necessary to perform the work such as traffic control plans and staging areas. We assume the required permits or rights of entries will be provided at no cost to HWA.

Coordinating Permits: HWA will coordinate all required Right-of-Way permits with the City for the geotechnical exploration program. This will include developing traffic control plans required for completion of work. Rights-of-Entry, if required, will be provided to HWA prior to mobilization of any exploration equipment.

Complete Pilot Infiltration Testing (PIT): HWA will complete pilot infiltration testing at five (5) locations along the 234th Street SW and 56th Avenue W corridor and at one (1) location at the intersection of 232nd Street SW and 58th Avenue W to evaluate near-surface infiltration rates. Exact locations will be determined after utility locations and access is determined.

All PITs will be excavated using a rubber-tracked excavator. HWA assumes that excavation and testing will take seven (7) working days to complete. HWA assumes that traffic control will be required for all testing locations and will consist of a temporary single lane closure with flaggers. HWA assumes all PIT locations will be placed outside of active travel lanes in parking

Docusign Envelope ID: D48BA7C5-D0D5-431E-B20B-2A6FD2626196

strips or landscaping strips. HWA has assumed that all work will be completed during typical workdays and work hours.

Each of the geotechnical explorations will be logged by an HWA representative.

Generate Exploration Logs and Assign Laboratory Testing: HWA will prepare summary exploration logs for each exploration and perform laboratory testing to evaluate relevant physical properties of select soil samples. Depending on the type of soils encountered, laboratory testing could include determination of moisture content, grain-size distribution, and Atterberg Limits. Cation Exchange Capacity (CEC) and organic content testing will be completed on soil samples from the infiltration testing explorations.

Geotechnical Design
Infiltration Analysis: HWA will utilize data collected from infiltration testing to select an appropriate design infiltration rate for the subsurface soil in the project area.

HWA QA/QC: HWA will have all design calculations and recommendations reviewed by a senior principal prior to distribution to the design team and the City.

Incorporate Into Draft Geotechnical Report: HWA will incorporate the findings of our PITs into the previously prepared draft geotechnical report for the project. This report will contain the results of the subsurface exploration program, including logs, laboratory test results, and a description of surface and subsurface conditions; a site plan showing exploration locations and other pertinent features; and geotechnical engineering recommendations for the design and construction of the proposed improvements.
Assumptions:

- The geotechnical explorations proposed herein will not be used to assess site environmental conditions. However, visual or olfactory observations regarding potential contamination will be noted. Analysis, testing, storage, and handling of potentially contaminated soil and groundwater (either sampled or spoils from excavation) are beyond this scope of services. If contaminated soils and/or groundwater are encountered, the material will be properly contained on-site for disposal as mutually agreed upon without additional cost to HWA.
- All non-contaminated excavation spoils and related debris produced by the explorations will be transported off site for proper disposal by the excavation subcontractor.
- Explorations and testing will be completed in seven (7) days. All field work including site reconnaissance, utility locates, excavation, and pilot infiltration testing will be accomplished during normal daylight workdays and hours, with at least a minimum 8 hours available per day.
- Utility locates, via the One-Call Utility Locate Center, will be comprehensive and accurate enough to allow reliable and safe location of the excavations for the PITs.
- All excavations will be conducted within the City ROW and in areas outside of active travel lanes.

Docusign Envelope ID: D48BA7C5-D0D5-431E-B20B-2A6FD2626196

- HWA assumes no concrete pavement is present below the surface asphalt and assumes that saw cutting will not be required prior to excavation for the PITs.
- Any work to be completed extending through pavement will be located in adjacent parking lots or parking strips. Rehabilitation of pavement upon completion of the PITs will require cold-patch asphalt. No saw cutting of pavement, hot mix asphalt or excavations through cement concrete pavement will be required. Pavement design will not be completed as part of this scope and any pavement work will consist of rehabilitation based on City standards.
- HWA assumes traffic control will consist of a temporary single lane closure, with flaggers, for all explorations.
- All required street use permits will be provided by others at no cost to HWA.
- All required rights-of-entry will be provided by others at no cost to the HWA.
- Exploration locations will be located using handheld GPS and measurement from existing known features.
- Following finalization of the geotechnical report, all soil samples will be disposed. Long-term storage of soil samples by HWA is not included.
- A site survey will be provided to HWA in support of design recommendations.
- HWA assumes that if any proposed exploration is near an existing tree, the City will determine if it is intended to be removed during construction or if it will remain. If it is to remain, the City will provide an arborist to determine if the exploration could impact the tree's critical root zone.

Deliverables:

- Subsurface Exploration Work Plan Memorandum.
- Updated draft Geotechnical Report

Requested By: _____ Date: _____

Approved: _____ Date: _____

_____
Title

Docusign Envelope ID: D48BA7C5-D0D5-431E-B20B-2A6FD2626196

Exhibit D

Consultant Fee Determination Summary

2707 Colby Avenue, Suite 900, Everett, WA 98201 P 425-252-7700 F 425-339-6018

Project: Main Street Revitalization, Phases 2 and 3
Client: City of Mountlake Terrace
Consultant: Perteet
Perteet Project No. 20230184
Date: 11-25-24

HOURLY COSTS

Classification	Hours	Rate	Amount
Senior Engineer/ Manager	20	$251.56	$5,031.20
Senior Engineer/ Manager	8	$191.38	$1,531.04
Lead Tech/ Designer	4	$147.29	$589.16
Engineer III	16	$165.58	$2,649.28
Senior Associate	48	$282.01	$13,536.60
Planner III	76	$162.21	$12,327.96
Senior Planner/ Cultural Resources Man	20	$180.61	$3,612.20
Cultural Resources Specialist II	20	$132.37	$2,647.40
Cultural Resources Specialist I	48	$100.31	$4,814.88
Technician I	16	$82.79	$1,324.64
Cultural Resources Specialist III	12	$152.29	$1,827.44
Labor Total	**288**		**$49,891.81**

REIMBURSABLES

Expenses	Cost	Markup	Amount
Travel-mileage	$102.00	1.0	$102
Total Expenses			**$102**

SUBCONSULTANTS

Subconsultants	Amount
HWA Geosciences, Inc.	$87,127
Total Subconsultants	**$87,127**

CONTRACT TOTAL $137,121

Rates shown reflect the typical compensation rate of employees assigned to the billing category listed. Each category may have multiple employees assigned to that billing category and each employee may have a different hourly rate of pay. Employee compensation is subject to adjustment in June of each calendar year.

Exhibit E

Subconsultant Fee Determination Summary

Subconsultant: HWA Geosciences, Inc.
Project: Main Street Revitalization, Phases 2 and 3
Client: City of Mountlake Terrace
Date: 1-13-25

HOURLY COSTS

Classification	Hours	Rate	Amount
Principal VIII	14	$291.86	$4,086.05
Geotechnical Engineer V	30	$203.03	$6,091.01
Geotechnical Engineer II	148	$136.41	$20,189.15
Principal IX	6	$323.58	$1,941.51
Hydrogeologist IV	2	$190.34	$380.69
Geotechnical Engineer VII	5	$269.65	$1,348.27
CAD	4	$114.21	$456.83
Total Labor Costs	**209**		**$34,493.51**

REIMBURSABLES

Laboratory Test	$1,780.00	1.0	$1,780.00
Field work	$3,253.80	1.0	$3,253.80
PIT sub	$47,600.00	1.0	$47,600.00
			$52,634

CONTRACT TOTAL	**$87,127** ƒ

ƒ bƨǘ l·y˜l·ŘŘƛǘƛƨyƚ·t ŦŜŜφ {ŜŜ 9ȀKƛōƛǘ 5Σ /ƨyǘǸl·Ǒǘ ¢ƨǘl·tφ

Docusign Envelope ID: 6255FB57-3EE0-4B48-8E39-67E3051061E7

CITY OF MOUNTLAKE TERRACE

Supplement 3 **Main Street Phase 2 & 3 Agreement**	**Organization Name and Address:** **Perteet, Inc.** **2707 Colby Ave, Ste 900** **Everett, WA 98201**	
Original Agreement Number N/A	Execution Date 02/01/2024	Completion Date 12/31/2026
Project Number N/A	Original Amount Authorized	$2,883,050.00
	Amount Previous Supplements	$172,017.00
Project Title Main Street Phase 2 & 3	Amount This Supplement	$72,896.00
	New Maximum Amount Payable	**$3,127,963.00**
Description of Work: Waterline design update and Geotechnical exploration addition.		

The City of Mountlake Terrace desires to supplement the agreement entered into with Perteet, Inc. and executed on 02/01/2024.

All provisions in the basic agreement remain in effect except as expressly modified by this supplement.

The changes to the agreement are described as follows:

I

Section 1, SERVICES, is hereby changed to read: See Exhibit A

III

Section 3, COMPENSATION, shall be amended as follows: See Exhibit B

If you concur with this supplement and agree to the changes as stated above, please sign in the appropriate spaces below and return to this office for final action.

By: Perteet, Inc.

Jesse A Thomsen — 12/10/2024

Jesse Thomsen, PE — Date

By: City of Mountlake Terrace

Jeff Niten — 12/10/2024

Jeff Niten, City Manager — Date

Docusign Envelope ID: 6255FB57-3EE0-4B48-8E39-67E3051061E7

EXHIBIT A

SCOPE OF WORK
City of Mountlake Terrace
Main Street Revitalization, Phases 2 and 3
Amendment 3
Waterline Design Update and Geotechnical Exploration Addition

STATEMENT OF PURPOSE

The current scope of this project is to rehabilitate 56th Avenue W, as well as 232nd Street SW and 234th Street SW. This includes the complete design of the roadway rehabilitation, including base repair and complete pavement reconstruction in asphalt concrete pavement, curb ramp upgrades/replacements, bike lanes, traffic signal reconfiguration, lighting design, drainage improvements required to meet the current drainage code, grading, utility adjustments, sidewalk replacement, tree pits, and other related items.

The City of Mountlake Terrace (City) has requested a waterline design be added to the 232nd Street SW design for two pressure zones. In addition, the City has also requested watermain pipe profiles be added for the watermains on 56th Avenue W. This work is expected to include:

- Plan and profile layout for the two watermains along 232nd Street SW.
- Profiles for the proposed pipe network along 56th Avenue W.
- Existing and proposed utility crossings shown in profile views

This amendment outlines the additional design efforts, supplemental services, and coordination required to achieve the City's project goals at the 100% submittal. The scope of work for Task 7.3 is supplemented with the following scope.

Task 1 – Project Management

The additional work has increased coordination for disciplines, as well as expected bid time for the project. This has increased the amount of time needed for project management to coordinate efforts to complete tasks.

Assumptions

- Phase 2 will go to bid at the end of 2026 and not 2025.
- The City will be applying for a RAISE grant to fund construction.
- The City will be applying for a TIB grant to fund construction.
- If the City does not secure grants, an amendment will be written to redefine the project limits and update the plans for the revised footprint.

Task 5 – 56th Avenue W – PS&E (Phase 2)

Docusign Envelope ID: 6255FB57-3EE0-4B48-8E39-67E3051061E7

5.3 100% Submittal

The waterline design is amended to include the following:

- Updating waterline in Civil 3D for pipe networks.
- Create pipe profile drawings for the following:
    - 56th Avenue W, from project limits north of 236th Street SW (connection to existing main at 15+04) to 230th Street SW (connection with existing watermain in intersection at 33+14).
    - 16" Watermain connection at approximately 23+25 to be included.
    - Hydrant connection profiles are not included.
    - Water service lateral profiles are not included.

The scope includes additional level of effort to address City comments on the 90% plans and update the watermain design per roadway changes anticipated from 90% City comments. The scope had previously assumed minimal changes at this design stage.

Assumptions:

- No profiles to be provided for the existing watermain.
- The Consultant has been provided with watermain connection notes to be incorporated into the plans. These notes will be incorporated, and no further changes will be needed.

Deliverables:

- Up to five (5) Watermain Profile sheets, 1":20' horizontal, 1":5' vertical

Task 7 – 232nd Street SW and 234th Street SW PS&E (Phase 2)

7.3 100% Submittal

The stormwater design is amended to include the following:

- Updating waterline in Civil 3D for pipe networks.
- Create pipe profile drawings for the following:
    - Watermain 1: 232nd Street SW, from project limits at 58th Avenue W (connection to existing main at 67+70) to 57th Avenue W (connection with existing watermain north of intersection at 33+14).
    - Watermain 2: 232nd Street SW, from project limits at 58th Avenue W (connection to existing main at 67+70) to east of 56th Avenue W intersection (connection with existing watermain east of intersection at 75+40).
    - 234th Street SW watermain profile at the intersection of 56th Avenue W to be included.
    - 16" Watermain connection at approximately 23+25 to be included.

Docusign Envelope ID: 6255FB57-3EE0-4B48-8E39-67E3051061E7

- Hydrant connection profiles are not included.
- Water service lateral profiles are not included.

Assumptions:

- No profiles to be provided for the existing watermain.
- The City has provided watermain connection notes to be incorporated into the plans. These notes will be incorporated and no further changes will be needed.

Deliverables:

- Up to four (4) Watermain Profile sheets, 1”:20’ horizontal, 1”:5’ vertical

Task 15 – Geotechnical Exploration

Geotechnical Project Setup: The Consultant will initiate the project and set up billing information in support of invoicing throughout the project.

Geotechnical Project Management: The Consultant will provide project management, including communications and coordination with the City of Mountlake Terrace (City). The Consultant will provide task management of geotechnical related aspects of the project. The Consultant will communicate with the City in the form of meetings, emails, and telephone calls, as necessary.

Consultant Team Meetings: The Consultant will meet with the City and/or design team to present our findings and discuss the geotechnical implications of our findings. We have assumed a maximum of three (3) virtual meetings, each no more than one (1) hour in length.

Invoice Generation and Processing: The Consultant will prepare monthly invoices, and progress reports, if required, for a total of twelve (12) months.

Geotechnical Field Explorations
Plan Geotechnical Exploration Program: The Consultant will plan and coordinate a geotechnical exploration and well installation program. The program will consist of completing:

- Two (2) geotechnical borings with installation of monitoring wells along 234th Street SW between 56th Avenue W and 58th Avenue W;
- One (1) geotechnical boring with installation of a monitoring well along 56th Avenue W between 234th Street SW and 235th Street SW;
- One (1) geotechnical boring with installation of a monitoring well at the intersection of 58th Avenue W and 232nd Street SW;

Conduct Utility Locates for Geotechnical Explorations: Prior to generation of our geotechnical work plan, the Consultant will mark the proposed exploration locations and arrange for utility

Docusign Envelope ID: 6255FB57-3EE0-4B48-8E39-67E3051061E7

locates using the Utility Notification Center. Utility location marks will be used to verify proposed exploration locations prior to development of traffic control plans.

Second Utility Locates Site Visit: The Consultant will make an additional site visit to verify that the proposed locations of the explorations are clear of utilities prior to finalizing the exploration plans and mobilizing any exploration equipment. Additionally, the Consultant will engage a private locating service to have conductible underground utilities located in the vicinity of the proposed borings. Non-conductible utilities (e.g., PVC and concrete pipe) cannot be located by the private locating service.

Generate Exploration Work Plan Memorandum: The Consultant will prepare a Geotechnical Work Plan Memorandum. The work plan will be submitted to the City for review and approval. The work plan will detail the type, location, and extent of proposed well installation and testing locations along with logistics necessary to perform the work such as traffic control plans and staging areas. We assume the required permits or rights-of-entries will be provided at no cost to the Consultant.
Coordinating Permits: The Consultant will coordinate all required right-of-way permits with the City for the geotechnical exploration program. This will include developing traffic control plans required for completion of work. Rights-of-entry, if required, will be provided to the Consultant prior to mobilization of any exploration equipment.

Conduct Geotechnical Borings and Install Monitoring Wells: The Consultant will advance three (3) geotechnical borings along the 234th Street SW and 56th Avenue W corridor and one (1) geotechnical boring at the intersection of 232nd Street SW and 58th Avenue W. All four (4) of these borings will be completed as monitoring wells to allow for future monitoring of water levels. The borings will be advanced to a depth of 30 feet. Exact locations will be determined after utility locations and access is determined.

All monitoring wells will be installed using a truck-mounted hollow stem auger drill rig. The Consultant assumes that completion of the geotechnical borings and installation of the proposed monitoring wells will take two (2) working days to complete. The Consultant assumes that traffic control will be required for all geotechnical borings and monitoring well installations and will consist of a temporary single lane closure with flaggers.

Each of the above-described geotechnical explorations will be logged by a Consultant representative. The Consultant has assumed that all work will be completed during typical workdays and work hours.

Generate Exploration Logs and Assign Laboratory Testing: HWA will prepare summary exploration logs for each exploration and perform laboratory testing to evaluate relevant physical properties of select soil samples. Depending on the type of soils encountered, laboratory testing could include determination of moisture content, grain-size distribution, and Atterberg Limits.

Docusign Envelope ID: 6255FB57-3EE0-4B48-8E39-67E3051061E7

Groundwater Well Monitoring
Conduct Groundwater Monitoring: The Consultant will conduct groundwater readings in the four (4) monitoring wells installed. Readings will be taken two (2) times per year, at a six-month interval, for a total of one (1) year. The data will processed and available to the City and design team by request.

Geotechnical Design
Infiltration Analysis: The Consultant will utilize data collected from infiltration testing to select an appropriate design infiltration rate for the subsurface soil in the project area.

CONSULTANT QA/QC: The Consultant will have all design calculations and recommendations reviewed by a senior principal prior to distribution to the design team and the City.

Prepare Draft Geotechnical Report: The Consultant will prepare a draft geotechnical report for the project. This report will contain the results of the subsurface exploration program, including logs, laboratory test results, and a description of surface and subsurface conditions; a site plan showing exploration locations and other pertinent features; and geotechnical engineering recommendations for the design and construction of the proposed improvements.

Prepare Final Geotechnical Report: The Consultant will finalize the geotechnical report once we receive consolidated review comments from the design team and the City.

Assumptions:

- The geotechnical explorations proposed herein will not be used to assess site environmental conditions. However, visual or olfactory observations regarding potential contamination will be noted. Analysis, testing, storage, and handling of potentially contaminated soil and groundwater (either sampled or spoils from excavation) are beyond this scope of services. If contaminated soils and/or groundwater are encountered, the material will be properly contained on-site for disposal as mutually agreed upon without additional cost to HWA.
- All non-contaminated excavation spoils and related debris produced by the explorations will be transported off site for proper disposal by the excavation subcontractor.
- Explorations and testing will be completed in seven (7) days. All field work, including site reconnaissance, utility locates, excavation, and pilot infiltration testing, will be accomplished during normal daylight workdays and hours, with at least a minimum eight (8) hours available per day.
- Utility locates, via the One-Call Utility Locate Center, will be comprehensive and accurate enough to allow reliable and safe location of the excavations for the PITs.

Docusign Envelope ID: 6255FB57-3EE0-4B48-8E39-67E3051061E7

- All excavations will be conducted within the City ROW and in areas outside of active travel lanes.
- The Consultant assumes no concrete pavement is present below the surface asphalt and assumes that saw cutting will not be required prior to excavation for the PITs.
- Any work to be completed extending through pavement will be located in adjacent parking lots or parking strips. Rehabilitation of pavement upon completion of the PITs will require cold-patch asphalt. No saw cutting of pavement, hot mix asphalt, or excavations through cement concrete pavement will be required. Pavement design will not be completed as part of this scope and any pavement work will consist of rehabilitation based on City standards.
- The Consultant assumes traffic control will consist of a temporary single lane closure, with flaggers, for all explorations.
- All required street use permits will be provided by others at no cost to HWA.
- All required rights-of-entry will be provided by others at no cost to the HWA.
- Exploration locations will be located using handheld GPS and measurement from existing known features.
- Following finalization of the geotechnical report, all soil samples will be disposed. Long-term storage of soil samples by the Consultant is not included.
- A site survey will be provided to the Consultant in support of design recommendations.
- The Consultant assumes that if any proposed exploration is near an existing tree, the City will determine if it is intended to be removed during construction or if it will remain. If it is to remain, the City will provide an arborist to determine if the exploration could impact the tree's critical root zone.

Deliverables:

- Monthly status reports and invoices.
- Subsurface Exploration Work Plan Memorandum.
- Draft Geotechnical Report
- Final Geotechnical Report

Docusign Envelope ID: 6255FB57-3EE0-4B48-8E39-67E3051061E7

Requested By: _____ Date: _____

Approved: _____ Date: _____

_____
Title

Docusign Envelope ID: 6255FB57-3EE0-4B48-8E39-67E3051061E7

Exhibit B

Consultant Fee Determination Summary

2707 Colby Avenue, Suite 900, Everett, WA 98201 P 425-252-7700 F 425-339-6018

Project: Main Street Revitalization, Phases 2 and 3
Client: City of Mountlake Terrace
Consultant: Perteet
Perteet Project No. 20230184
Date: 11-25-24

HOURLY COSTS

Classification	Hours	Rate	Amount
Senior Engineer/ Manager	6	$251.56	$1,509.36
Lead Engineer/ Manager	16	$191.38	$3,062.08
Lead Tech/ Designer	124	$147.29	$18,264.10
Engineer III	16	$165.58	$2,649.28
Labor Total	**162**		**$25,484.82**

SUBCONSULTANTS

Subconsultants	Amount
HWA Geosciences, Inc.	$47,412
Total Subconsultants	**$47,412**

CONTRACT TOTAL $72,896

Rates shown reflect the typical compensation rate of employees assigned to the billing category listed. Each category may have multiple employees assigned to that billing category and each employee may have a different hourly rate of pay. Employee compensation is subject to adjustment in June of each calendar year.

Docusign Envelope ID: 6255FB57-3EE0-4B48-8E39-67E3051061E7

Exhibit E

Subconsultant Fee Determination Summary

Subconsultant: HWA Geosciences, Inc.
Project: Main Street Revitalization, Phases 2 and 3
Client: City of Mountlake Terrace
Date: 11-25-24

HOURLY COSTS

Classification	Hours	Rate	Amount
Principal VIII	18	$291.86	$5,253.49
Geotechnical Engineer V	43	$203.03	$8,730.44
Geotechnical Engineer II	64	$136.41	$8,730.44
Principal IX	3	$323.58	$970.75
Hydrogeologist IV	2	$190.34	$380.69
Geotechnical Engineer VII	4	$269.65	$1,078.62
CAD	8	$114.21	$913.65
Admin Support	2	$120.55	$241.10
Contracts Admin	7	$168.14	$1,176.96
Total Labor Costs	**151**		**$27,476.16**

REIMBURSABLES

Field Work	$2,535.40	1.0	$2,535.40
Drilling	$17,400.00	1.0	$17,400.00
			$19,935

CONTRACT TOTAL $47,412

Docusign Envelope ID: 6255FB57-3EE0-4B48-8E39-67E3051061E7

HWA GeoSciences, Inc.
Negotiated Hourly Rate Sheet
Client: City of Mountlake Terrace
Project: Main Street Revitalization, Phase 2
Date updated: 11/25/2024

		Overhead:	Fixed Fee:	
		187.24%	30.00%	
Job Classification	**Direct Labor (DL)**	**Overhead (OH x DL)**	**Fixed Fee % (Fee x DL)**	**All Inclusive Hourly Billing Rate**
Principal VIII	$92.00	$172.26	$27.60	$291.86
Geotechnical Engineer V	$64.00	$119.83	$19.20	$203.03
Geotechnical Engineer II	$43.00	$80.51	$12.90	$136.41
Principal IX	$102.00	$190.98	$30.60	$323.58
Hydrogeologist IV	$60.00	$112.34	$18.00	$190.34
Geotechnical Engineer VII	$85.00	$159.15	$25.50	$269.65
CAD	$36.00	$67.41	$10.80	$114.21
Admin Support	$38.00	$71.15	$11.40	$120.55
Contracts Admin	$53.00	$99.24	$15.90	$168.14
		$0.00	$0.00	$0.00
		$0.00	$0.00	$0.00
		$0.00	$0.00	$0.00

Docusign Envelope ID: 8FCB802E-4410-4BC6-AA07-4D2291FDD50A

Washington State Department of Transportation

Supplemental Agreement Number 2	Organization and Address Perteet, Inc. 2707 Colby Avenue, Suite 900 Everett, WA 98201 Phone: (425) 252-7700	
Original Agreement Number N/A		
Project Number N/A	Execution Date February 1, 2024	Completion Date December 31, 2026
Project Title Main Street Phase 2 & 3	New Maximum Amount Payable $3,055,067.00	
Description of Work See attached Exhibit A - Scope of Services.		

The Local Agency of City of Mountlake Terrace
desires to supplement the agreement entered in to with Perteet, Inc.
and executed on February 1, 2024 and identified as Agreement No. N/A
All provisions in the basic agreement remain in effect except as expressly modified by this supplement.
The changes to the agreement are described as follows:

I

Section 1, SCOPE OF WORK, is hereby changed to read:

See attached Exhibit A, Scope of Services.

II

Section IV, TIME FOR BEGINNING AND COMPLETION, is amended to change the number of calendar days for completion of the work to read: No Change

III

Section V, PAYMENT, shall be amended as follows:

Supplement 2 will reallocate existing budget (shown on Exhibit A), incorporate WSDOT accepted ICR's FYE 2023 for Perteet and subconsultants and add budget in the amount of $168,894.00 for a new Maximum Amount Payable of $3,055,067.00.

as set forth in the attached Exhibit A, and by this reference made a part of this supplement.
If you concur with this supplement and agree to the changes as stated above, please sign in the Appropriate spaces below and return to this office for final action.

By: Perteet, Inc.

Jesse A Thomsen

Jesse Thomsen, PE

By: City of Mountlake Terrace

Jeff Niten

Jeff Niten, City Manager

10/17/2024

Date

DOT Form 140-063
Revised 09/2005

Docusign Envelope ID: 8FCB802E-4410-4BC6-AA07-4D2291FDD50A

SCOPE OF WORK
City of Mountlake Terrace
Main Street Revitalization, Phases 2 and 3
Supplement No. 2
Design Update and Additional Right-of-Way for 232nd Street SW and 234th Street SW

STATEMENT OF PURPOSE

The current scope of this project is to rehabilitate 56th Avenue W, as well as 232nd Street SW and 234th Street SW. This includes the complete design of the roadway rehabilitation, including base repair and complete pavement reconstruction in asphalt concrete pavement, curb ramp upgrades/replacements, bike lanes, traffic signal reconfiguration, lighting design, drainage improvements required to meet the current Drainage Code, grading, utility adjustments, sidewalk replacement, tree pits, and other related items.

The City of Mountlake Terrace (City) has requested further parcels be included with the Main Street Revitalization Phase 2 and 3 to include the following items:

- 24 additional appraisals
- 24 additional offer packages
- Up to 15 additional parcels for right-of-way acquisition
- Providing all escrow and closing services

The tasks for Right-of-Way (Tasks 8.1 and 8.2) associated with 232nd Street SW and 234th Street SW was scoped to 18 parcels. The number of parcels has changed to 24 parcels. Also, Task 8.3 for "Right-of-Way Appraisal and Acquisition Services" was scoped as an optional task, and this amendment switches it from an optional task to part of the contract for appraisals, determination of value (appraisal review), and preparation of the offer package for 24 additional parcels. This amendment also includes negotiation, administrative settlement, closing and escrow services, and associated work for up to 15 parcels.

After receiving public comment, the City has decided to pause the development of the 57th Avenue W corridor to a later date. With this in mind, Tasks 11 and 12 are becoming optional.

Storm drainage throughout the project has been revised to show a current design that includes infiltration and use of the City's existing regional stormwater system in lieu of a vault along 234th Street SW. This design is based on an assumed design infiltration rate at this time until requested geotechnical investigations are completed. The size and type of drainage facilities proposed are subject to change depending on the ultimate design infiltration rates. This has been based on direction from the City to minimize impact to create adherence to the current NEPA approval and in process requested extension.

This amendment outlines the additional design efforts, supplemental services, and coordination required to achieve the City's Project goals at the 100% submittal. The scope of work for Tasks 5.3 and 7.3 is supplemented with the following scope. Task 11.4 Phase 2B – 57th Avenue W conceptual design work is removed from the scope of work.

Docusign Envelope ID: 8FCB802E-4410-4BC6-AA07-4D2291FDD50A

Task 1 – Project Management

The additional work has increased coordination for disciplines, as well as expected bid time for the project. This has increased the amount of time needed for project management to coordinate efforts to complete task.

Assumptions

- Phase 2 will go to bid at the end of 2026 and not 2025
- City will be applying for a RAISE grant to fund construction.
- City will be applying for a TIB grant to fund construction.
- If the City does not secure grants, an amendment will be written to redefine the project limits and update the plans for the revised footprint.

Task 5 – 56th Avenue W – PS&E (Phase 2)

5.3 100% Submittal

The stormwater design is amended to include the following:

- Geotechnical and landscape coordination for the added BMP design elements.
- The selected project stormwater concept alternative will include up to seven (7) water quality facilities and up to seven (7) infiltration facilities.
- Additional potholes will be coordinated with the City and Prime Consultant based on storm drain conveyance updates from the original concept plans at the start of the project. Utility crossings on the stormwater profiles will be updated per potholes requested.
- O&M manuals will be prepared for the additional BMP facilities proposed and will be submitted as an attachment to the stormwater report.

The scope includes additional level of effort to address City comments on the 90% plans and update the drainage design per roadway changes anticipated from 90% City comments. The scope had previously assumed minimal changes at this design stage.

Assumptions:

- The Consultant has assumed infiltration rates and groundwater depths based on initial geotechnical recommendations for the 90% submittal. Infiltration rate data will be reviewed when it is available and the 100% design updated per geotechnical recommendations.
- The 100% design will not be progressed without the infiltration data necessary to confirm the stormwater design.

Task 7 – 232nd Street SW and 234th Street SW PS&E (Phase 2)

7.3 100% Submittal

The stormwater design is amended to include the following:

Docusign Envelope ID: 8FCB802E-4410-4BC6-AA07-4D2291FDD50A

- Analysis of treatment and infiltration options to meet the City's goals of 100% infiltration (provided infiltration is found to be feasible) for 234th Street SW and drain 232nd Street SW towards the regional facility, or design treatment and infiltration facilities at that intersection.
- Geotechnical and landscape coordination for the added BMP design elements.
- The selected project stormwater concept alternative will include up to seven (7) water quality facilities and up to seven (7) infiltration facilities.
- An additional storm conveyance connection will be evaluated and may be shown at the 100% submittal on a new plan sheet and profile sheet to drain the intersection of 232nd Street SW and 58th Avenue W southward towards the storm drain connecting to the City's regional stormwater infiltration facility. If infiltration is feasible at this intersection, the conveyance connection will not be shown.
- Updates to the stormwater report to include infiltration design calculations and discussion per NEPA coordination and removal of the detention vault on 234th Street SW.
- Additional potholes will be coordinated with the City and Prime Consultant based on storm drain conveyance updates from the original concept plans at the start of the project. Utility crossings on the stormwater profiles will be updated per potholes requested.
- O&M manuals will be prepared for the additional BMP facilities proposed and will be submitted as an attachment to the stormwater report.

The scope includes additional level of effort to address City comments on the 90% plans and update the drainage design per roadway changes anticipated from 90% City comments. The scope had previously assumed minimal changes at this design stage.

Assumptions:

- The Consultant has assumed infiltration rates and groundwater depths based on initial geotechnical recommendations for the 90% submittal. Infiltration rate data will be reviewed when it is available and the 100% design updated per geotechnical recommendations.
- The 100% design will not be progressed without the infiltration data necessary to confirm the stormwater design.
- Water quality and infiltration stormwater facilities are required on 234th Street SW to provide 100% infiltration (if feasible) of the ROW drainage area between 58th Avenue W and 56th Avenue W to comply with NEPA as coordinated by the City.
- The City will determine if the regional stormwater facility design can accommodate the additional areas routed to it from the project improvements. The Consultant will identify the potential additional contributing areas.
- Utility crossings for the proposed new connection along 58th Avenue W are unknown. It is assumed the storm drain connection is feasible and utilities will be relocated as necessary should the 100% design continue to show the piped connection.
- It is assumed that if infiltration is feasible at the intersection of 232nd Street SW and 58th Avenue W, that infiltration facilities would be preferred in lieu of this new pipe connection. Pipe connection feasibility will be determined based on available as-built data.

Docusign Envelope ID: 8FCB802E-4410-4BC6-AA07-4D2291FDD50A

Task 8 – Right-of-Way 232nd/234th (Phase 2)

8.1 Prepare Property Owner Exhibits

Eighteen property owner exhibits are revised to 24 property owner exhibits.

8.2 Prepare Legal Descriptions

Eighteen legal descriptions are revised to 24 legal descriptions.

8.3 Right-of-Way Appraisal and Acquisition Services

This work will include preparing a right-of-way funding estimate, conducting appraisals and review appraisals, property owner negotiations and acquisition documentation, and WSDOT certification support. Assumes 24 parcels for appraisal and up to 15 parcels for negotiations.

Deliverables:

- Property owner exhibits (PDF format)
- Legal descriptions and exhibits (PDF format)
- Project right-of-way funding estimate
- Appraisal and review appraisal documentation
- Offer letters and project correspondence log for ROW negotiations

Title Searches and Review

- Create state and federal compliant project files for each parcel.
- Request the City order new and/or updates to existing title commitments.
- Review title reports for each parcel and identify each exception.
- Once a parcel's title interest has been reviewed, identify methods of clearance per City direction.

Deliverables:

- Up to 24 Title Review Summaries
- Up to 24 clearance/exception reports for approval by the City

Appraisal and Appraisal Review Coordination

- Coordinating appraisal task and any subconsultants.
- Providing all documentation required to complete appraisal report review, supporting the City's Determinations of Value.
- Integrating findings into offer packages.

Deliverables:

- Up to 24 Appraisals
- Up to 24 Review Appraisals

Docusign Envelope ID: 8FCB802E-4410-4BC6-AA07-4D2291FDD50A

- Determinations of Value/Just Compensation for approval by the City

Negotiations, Administrative Settlements, QA/QC

- Project file set-up, reviewing of all appraisal and compensation data.
- Preparing, delivering, and presenting offer packages.
- Negotiating settlements, and drafting justification memos.
- QA/QC of all documents, tasks, and processes before, during, and after acquisition process.
- Clearing encroachments to comply with federal and state requirements.
- Additionally, includes support preparing condemnation ordinance(s) when required.

Deliverables:

- Up to 24 additional offer packages
- Transmittal of executed acquisition documents where amicable settlements are approved by the City
- Condemnation packages where proposed settlements are not approved by the City
- Diaries (project correspondence log) for up to 15 additional negotiations

WSDOT Certification and File Closeout

- Collaborate with City during certification process.
- Setting up client escrow account or facilitating execution of all conveyance documents, payment vouchers, proof of payment and closing data along with recorded conveyance documents and closing of files.
- Setting up closed files to provide to WSDOT LAC.
- Addressing any issues or concerns raised by Local Programs.
- Prepare parcel files (electronic and/or hard copy) in a format requested by the City.

Deliverables:

- Up to 15 parcel files for submission to WSDOT LAC for certification
- Certification letters and submissions for WSDOT LA

8.4 Acquisition Area Staking Services

This work will include marking the boundaries of the proposed Right of Way and Easement Areas as requested in white paint and / or wooden stakes and lath.

Docusign Envelope ID: 8FCB802E-4410-4BC6-AA07-4D2291FDD50A

Change Management

Supplemental Fees

Tasks 11 and 12 as identified in the original Agreement are eliminated from the Consultant services based on direction from the City. At the request of the City, the Consultant will apply the fee associated with Tasks 11 and 12 towards the task described within this scope of services for Amendment No. 2. The majority of the budget will go towards Task 8 and reimbursables for tasks associated with Task 8.

Project Engineering Fee Change Summary.

Task	Fee					
	Perteet	Concord	Osborn	Toole	Commonstreet	Psomas
Task 1 – Project Management	$17,344	$	$	$	$	$
Task 5 – 56th Avenue W – PS&E (Phase 2)	$	$	$23,598	$	$	$
Task 7 – 232nd Street SW and 234th Street SW PS&E (Phase 2)	$	$	$21,337	$	$	$
Task 8 – Right-of-Way 232nd/234th (Phase 2)	$	$	$	$	$273,477	$34,240
Task 11 – 57th Conceptual Design (Phase 3) (Optional Task)	$(64,497)	$(9,641)	$(55,526)	$(37,079)	$	$(34,240)
Task 12 – Preliminary (10%) Design Report and Cost Estimate (Phase 3) (Optional Task)	$(112,955)	$	$	$(19,989)	$	$
Reimbursable	$	$	$	$	$132,825	$
Subtotal	$(160,108)	$ (9,641)	$(10,591)	$ (57,068)	$406,302	$
Cumulative Change in Contract Fee:	$168,894					

Docusign Envelope ID: 8FCB802E-4410-4BC6-AA07-4D2291FDD50A

Washington State Department of Transportation

Development Division
Contract Services Office
PO Box 47408
Olympia, WA 98504-7408
7345 Linderson Way SW
Tumwater, WA 98501-6504

TTY: 1-800-833-6388
www.wsdot.wa.gov

June 28, 2024

Perteet, Inc.
2707 Colby Avenue, Suite 900
Everett, WA 98201

Subject: Acceptance FYE 2023 ICR – CPA Report

Dear Denice Moan:

We have accepted your firm's FYE 2023 Indirect Cost Rate (ICR) of 192.30% of direct labor (rate includes 0.36% Facilities Capital Cost of Money) based on the "Independent CPA Report" prepared by Stambaugh Ness. This rate will be applicable for WSDOT Agreements and Local Agency Contracts in Washington only. This rate may be subject to additional review if considered necessary by WSDOT. Your ICR must be updated on an annual basis.

Costs billed to agreements/contracts will still be subject to audit of actual costs, based on the terms and conditions of the respective agreement/contract.

This was not a cognizant review. Any other entity contracting with the firm is responsible for determining the acceptability of the ICR.

If you have any questions, feel free to contact our office at **(360) 704-6397** or via email **consultantrates@wsdot.wa.gov**.

Regards,

Schatzie Harvey
Schatzie Harvey (Jul 1, 2024 06:44 PDT)
SCHATZIE HARVEY, CPA
Contract Services Manager

SH: BJO

Docusign Envelope ID: 8FCB802E-4410-4BC6-AA07-4D2291FDD50A

Washington State Department of Transportation

Development Division
Contract Services Office
PO Box 47408
Olympia, WA 98504-7408
7345 Linderson Way SW
Tumwater, WA 98501-6504

TTY: 1-800-833-6388
www.wsdot.wa.gov

February 29, 2024

Commonstreet Consulting, LLC
100 S King Street, Ste. 100
Seattle, WA 98104

Subject: Acceptance FYE 2023 ICR – Risk Assessment Review

Dear Melinda Diaz:

Based on Washington State Department of Transportation's (WSDOT) Risk Assessment review of your Indirect Cost Rate (ICR), we have accepted your proposed FYE 2023 ICR of 119.58% of direct labor. This rate will be applicable for WSDOT Agreements and Local Agency Contracts in Washington only. This rate may be subject to additional review if considered necessary by WSDOT. Your ICR must be updated on an annual basis.

Costs billed to agreements/contracts will still be subject to audit of actual costs, based on the terms and conditions of the respective agreement/contract.

This was not a cognizant review. Any other entity contracting with your firm is responsible for determining the acceptability of the ICR.

If you have any questions, feel free to contact our office at **(360) 704-6397** or via email **consultantrates@wsdot.wa.gov**.

Regards,

Schatzie Harvey

Schatzie Harvey (Mar 1, 2024 07:02 PST)

SCHATZIE HARVEY, CPA
Contract Services Manager

SH:HK

Docusign Envelope ID: 8FCB802E-4410-4BC6-AA07-4D2291FDD50A

Washington State Department of Transportation

Development Division
Contract Services Office
PO Box 47408
Olympia, WA 98504-7408
7345 Linderson Way SW
Tumwater, WA 98501-6504

TTY: 1-800-833-6388
www.wsdot.wa.gov

June 28, 2024

Osborn Consulting, Inc.
1800 112th Ave NE, Suite 220-E
Bellevue, WA 98004

Subject: Acceptance FYE 2023 ICR – CPA Report

Dear Megan Isaacks:

We have accepted your firm's FYE 2023 Indirect Cost Rate (ICR) of 169.22% of direct labor (rate includes 0.13% Facilities Capital Cost of Money) based on the "Independent CPA Report" prepared by D.L. Purvine, CPA, PLLC. This rate will be applicable for WSDOT Agreements and Local Agency Contracts in Washington only. This rate may be subject to additional review if considered necessary by WSDOT. Your ICR must be updated on an annual basis.

Costs billed to agreements/contracts will still be subject to audit of actual costs, based on the terms and conditions of the respective agreement/contract.

This was not a cognizant review. Any other entity contracting with the firm is responsible for determining the acceptability of the ICR.

If you have any questions, feel free to contact our office at **(360) 704-6397** or via email **consultantrates@wsdot.wa.gov**.

Regards,

Schatzie Harvey
Schatzie Harvey (Jul 1, 2024 06:41 PDT)
SCHATZIE HARVEY, CPA
Contract Services Manager

SH: BJO

Docusign Envelope ID: 8FCB802E-4410-4BC6-AA07-4D2291FDD50A

Washington State Department of Transportation

Development Division
Contract Services Office
PO Box 47408
Olympia, WA 98504-7408
7345 Linderson Way SW
Tumwater, WA 98501-6504

TTY: 1-800-833-6388
www.wsdot.wa.gov

July 31, 2024

Toole Design Group, LLC
8484 Georgia A venue, Suite 800
Silver Springs, MD 2091

Subject: Acceptance FYE 2023 ICR – CPA Report

Dear Julie Albright:

We have accepted your firm's FYE 2023 Indirect Cost Rate (ICR) of 175.56% of direct labor (rate includes 0.10% Facilities Capital Cost of Money) based on the "Independent CPA Report" prepared by Withum Smith & Brown, PC. This rate will be applicable for WSDOT Agreements and Local Agency Contracts in Washington only. This rate may be subject to additional review if considered necessary by WSDOT. Your ICR must be updated on an annual basis.

Costs billed to agreements/contracts will still be subject to audit of actual costs, based on the terms and conditions of the respective agreement/contract.

This was not a cognizant review. Any other entity contracting with the firm is responsible for determining the acceptability of the ICR.

If you have any questions, feel free to contact our office at **(360) 704-6397** or via email **consultantrates@wsdot.wa.gov**.

Regards,

Schatzie Harvey
Schatzie Harvey (Aug 1, 2024 05:48 PDT)

SCHATZIE HARVEY, CPA
Contract Services Manager

SH:kb

Docusign Envelope ID: 8FCB802E-4410-4BC6-AA07-4D2291FDD50A

Washington State Department of Transportation

Development Division
Contract Services Office
PO Box 47408
Olympia, WA 98504-7408
7345 Linderson Way SW
Tumwater, WA 98501-6504

TTY: 1-800-833-6388
www.wsdot.wa.gov

August 20, 2024

Concord Engineering, Inc.
2285 116th Ave NE
Bellevue, WA 98004

Subject: Acceptance FYE 2023 ICR – Risk Assessment Review

Dear Irene Yang:

Based on Washington State Department of Transportation's (WSDOT) Risk Assessment review of your Indirect Cost Rate (ICR), we have accepted your proposed FYE 2023 ICR of 102.22%. This rate will be applicable for WSDOT Agreements and Local Agency Contracts in Washington only. This rate may be subject to additional review if considered necessary by WSDOT. Your ICR must be updated on an annual basis.

Costs billed to agreements/contracts will still be subject to audit of actual costs, based on the terms and conditions of the respective agreement/contract.

This was not a cognizant review. Any other entity contracting with your firm is responsible for determining the acceptability of the ICR.

If you have any questions, feel free to contact our office at **(360) 704-6397** or via email **consultantrates@wsdot.wa.gov**.

Regards,

Schatzie Harvey
Schatzie Harvey (Aug 22, 2024 06:59 PDT)

SCHATZIE HARVEY, CPA
Contract Services Manager

SH:sms

Docusign Envelope ID: 8FCB802E-4410-4BC6-AA07-4D2291FDD50A

Washington State Department of Transportation

Development Division
Contract Services Office
PO Box 47408
Olympia, WA 98504-7408
7345 Linderson Way SW
Tumwater, WA 98501-6504

TTY: 1-800-833-6388
www.wsdot.wa.gov

August 12, 2024

KPG Psomas
3131 Elliott Avenue, Suite 400
Seattle, WA 98121

Subject: Acceptance FYE 2023 ICR – CPA Report

Dear Tracy Zucker:

We have accepted your firm's FYE 2023 Indirect Cost Rate (ICR) of 174.17% of direct labor based on the "Independent CPA Report" prepared by K Coe Isom, LLP. This rate will be applicable for WSDOT Agreements and Local Agency Contracts in Washington only. This rate may be subject to additional review if considered necessary by WSDOT. Your ICR must be updated on an annual basis.

Costs billed to agreements/contracts will still be subject to audit of actual costs, based on the terms and conditions of the respective agreement/contract.

This was not a cognizant review. Any other entity contracting with the firm is responsible for determining the acceptability of the ICR.

If you have any questions, feel free to contact our office at **(360) 704-6397** or via email **consultantrates@wsdot.wa.gov**.

Regards,

Schatzie Harvey
Schatzie Harvey (Aug 12, 2024 11:19 PDT)

SCHATZIE HARVEY, CPA
Contract Services Manager

SH: kb

DocuSign Envelope ID: CBE9E1D0-8A74-4B3F-9C65-E649CC0872B2

CITY OF MOUNTLAKE TERRACE

Supplement 1 **Main Street Phase 2 & 3 Agreement**	**Organization Name and Address:** **Perteet, Inc.** **2707 Colby Ave, Ste 900** **Everett, WA 98201**	
Original Agreement Number N/A	Execution Date 02/01/2024	Completion Date 12/31/2026
Project Number N/A	Original Amount Authorized	$2,883,050.00
	Amount Previous Supplements	N/A
Project Title Main Street Phase 2 & 3	Amount This Supplement	$3,123.00
	New Maximum Amount Payable	**$2,886,173.00**
Description of Work: **Cultural Resources Compliance**		

The City of Mountlake Terrace desires to supplement the agreement entered into with Perteet, Inc. and executed on 02/01/2024.

All provisions in the basic agreement remain in effect except as expressly modified by this supplement.

The changes to the agreement are described as follows:

I

Section 1, SERVICES, is hereby supplemented to include: See Exhibit A

III

Section 3, COMPENSATION, shall be amended as follows: See Exhibit B

If you concur with this supplement and agree to the changes as stated above, please sign in the appropriate spaces below and return to this office for final action.

By: Perteet, Inc.

Jesse A Thomsen — 6/6/2024

Jesse Thomsen, PE — Date

By: City of Mountlake Terrace

Jesse Hoffman — 6/6/2024

Jesse Hoffman, Public Works Director — Date

DocuSign Envelope ID: CBE9E1D0-8A74-4B3F-9C65-E649CC0872B2

Exhibit A

May 22, 2024
Scope of Work
Main St Revitalization, Phase 2 and 3
Amendment 1
Cultural Resources EO-2102 Compliance

Statement of Purpose

The City of Mountlake Terrace (CITY) is refining the Main Str Revitalization Phase 2 and 3 to include the following items:

Cultural Resources EO-2102 Compliance

The original goal of this project is to rehabilitate 56th Ave W, as well as 232nd St SW and 234th ST SW. This includes the complete design of the roadway rehabilitation, including base repair and complete pavement reconstruction in asphalt concrete pavement, curb ramp upgrades/replacements, bike lanes, traffic signal reconfiguration, Lighting design, drainage improvements required to meet the current Drainage Code, grading, utility adjustments, sidewalk replacement, tree pits, and other related items.

Task 1 – Project Management

The additional work has increased coordination for disciplines. This has increased the amount of time needed for project management to coordinate efforts to complete task.

Task 15 – Environmental Permitting Support

15.1 Cultural Resources EO-2102 Compliance

The project will use TIB funding, and is therefore subject to Governor's Executive Order 21-02, which requires consultation with the Department of Archaeology and Historic Preservation (DAHP) and affected Tribes. The Consultant will assist the City in preparing an EZ-1 form to initiate consultation with the DAHP. The Consultant will also prepare letter template for initiating consultation with affected Tribes and supply a list of Tribal contacts.

- A project area map will be created by the Consultant based on 60% design information to illustrate the project footprint.
- Consultant planning staff will assist the City in preparation of the EZ-1 form.
- The EZ-1 form will be submitted to the DAHP by the City.
- Tribal Consultation letters will be sent to affected Tribes by the City.
- No meetings or fieldwork will occur.
- If warranted from the findings of DAHP or affected tribes, supplemental field efforts may be needed by the Consultant archeologist. These additional field and office efforts, coordination, and reporting would be considered an additional service and may be completed as a supplement to this Scope of Services. A detailed description of the services would be identified and coordinated with the City.

DocuSign Envelope ID: CBE9E1D0-8A74-4B3F-9C65-E649CC0872B2

- The City is also seeking Federal funding for the project, if secured, Federal funding would make the project subject to Section 106 of the National Historic Preservation Act (NHPA), which may require additional cultural resources work as additional services.

Deliverables:

- EZ-1 form provided to Client for email submittal to the DAHP
- Tribal consultation letter template and address list provided to Client for mailing to affected Tribes on City letterhead and with City signature

EXHIBIT B

PERTEET

Project	Main Street Revitalization Phase 2 & 3- Cultural Resources EO-2102 Compliance	Contract Start Date	4/24/2024	Last Update date	5/22/2024
Client	City of Mountlake Terrace	Contract End Date	9/25/2025	Perteet Project No.	20230184.0000S1
PM	Rory Cameron	Contract Duration:	17 Months		

Task	Billing Rate	Sr. Engineer / Mgr	Sr Planner/Cultural Resources Manager	Cultural Resources Specialist II	Total Hours	Labor Dollars
		$245.19	$175.36	$132.37		
Task 1 - Project Management and Coordination		2.00			2.00	$490.00
Total Task 1 - Project Management and Coordination		**2.00**	**0.00**	**0.00**	**2.00**	**$490.00**
Task 15.1- Cultural Resources EO-2102 Compliance			12.00	4.00	16.00	$2,634.00
Total Task 15.1- Cultural Resources EO-2102 Compliance		**0.00**	**12.00**	**4.00**	**16.00**	**$2,634.00**
Total Hours		2.00	12.00	4.00	18.00	
Total Dollars		$490.00	$2,104.00	$529.00		$3,123.00

SUMMARY	
Labor	$3,123.00
Expenses	$0.00
Subconsultants	$0.00
CONTRACT TOTAL	$3,123.00

Local Agency A&E Professional Services Negotiated Hourly Rate Consultant Agreement

Agreement Number:

Firm/Organization Legal Name (do not use dba's): Perteet, Inc.	
Address: 2707 Colby Ave, Ste 900, Everett, WA 98201	Federal Aid Number: n/a
UBI Number: 601 288 065	Federal TIN: 91-1505037
Execution Date: February 1, 2024	Completion Date: December 31, 2026
1099 Form Required: ☐ Yes ☒ No	Federal Participation: ☒ Yes ☐ No
Project Title: City of Mountlake Terrace Main Street Phase 2 & 3	
Description of Work: See attached Exhibit A, Scope of Services	

☒ Yes	☐ No DBE Participation	Maximum Amount Payable:
☐ Yes	☒ No MBE Participation	Total Amount Authorized: $2,683,050.00
☒ Yes	☐ No WBE Participation	Management Reserve Fund: $200,000.00
☐ Yes	☒ No SBE Participation	Maximum Amount Payable: $2,883,050.00

Index of Exhibits

Exhibit A Scope of Work
Exhibit B DBE Participation
Exhibit C Preparation and Delivery of Electronic Engineering and Other Data
Exhibit D Prime Consultant Cost Computations
Exhibit E Sub-consultant Cost Computations
Exhibit F Title VI Assurances
Exhibit G Certification Documents
Exhibit H ~~Liability Insurance Increase~~
Exhibit I Alleged Consultant Design Error Procedures
Exhibit J Consultant Claim Procedures

THIS AGREEMENT, made and entered into as shown in the "Execution Date" box on page one (1) of this AGREEMENT, between the City of Mountlake Terrace, hereinafter called the "AGENCY," and the "Firm / Organization Name" referenced on page one (1) of this AGREEMENT, hereinafter called the "CONSULTANT."

WHEREAS, the AGENCY desires to accomplish the work referenced in "Description of Work" on page one (1) of this AGREEMENT and hereafter called the "SERVICES;" and does not have sufficient staff to meet the required commitment and therefore deems it advisable and desirable to engage the assistance of a CONSULTANT to provide the necessary SERVICES; and

WHEREAS, the CONSULTANT represents that they comply with the Washington State Statutes relating to professional registration, if applicable, and has signified a willingness to furnish consulting services to the AGENCY.

NOW, THEREFORE, in consideration of the terms, conditions, covenants, and performance contained herein, or attached and incorporated and made a part hereof, the parties hereto agree as follows:

I. General Description of Work

The work under this AGREEMENT shall consist of the above-described SERVICES as herein defined, and necessary to accomplish the completed work for this project. The CONSULTANT shall furnish all services, labor, and related equipment and, if applicable, sub-consultants and subcontractors necessary to conduct and complete the SERVICES as designated elsewhere in this AGREEMENT.

II. General Scope of Work

The Scope of Work and projected level of effort required for these SERVICES is described in Exhibit "A" attached hereto and by this reference made a part of this AGREEMENT. The General Scope of Work was developed utilizing performance based contracting methodologies.

III. General Requirements

All aspects of coordination of the work of this AGREEMENT with outside agencies, groups, or individuals shall receive advance approval by the AGENCY. Necessary contacts and meetings with agencies, groups, and/or individuals shall be coordinated through the AGENCY. The CONSULTANT shall attend coordination, progress, and presentation meetings with the AGENCY and/or such State, Federal, Community, City, or County officials, groups or individuals as may be requested by the AGENCY. The AGENCY will provide the CONSULTANT sufficient notice prior to meetings requiring CONSULTANT participation. The minimum required hours or days' notice shall be agreed to between the AGENCY and the CONSULTANT and shown in Exhibit "A."

The CONSULTANT shall prepare a monthly progress report, in a form approved by the AGENCY, which will outline in written and graphical form the various phases and the order of performance of the SERVICES in sufficient detail so that the progress of the SERVICES can easily be evaluated.

The CONSULTANT, any sub-consultants, and the AGENCY shall comply with all Federal, State, and local laws, rules, codes, regulations, and all AGENCY policies and directives, applicable to the work to be performed under this AGREEMENT. This AGREEMENT shall be interpreted and construed in accordance with the laws of the State of Washington.

Participation for Disadvantaged Business Enterprises (DBE) or Small Business Enterprises (SBE), if required, per 49 CFR Part 26, shall be shown on the heading of this AGREEMENT. If DBE firms are utilized at the commencement of this AGREEMENT, the amounts authorized to each firm and their certification number will be shown on Exhibit "B" attached hereto and by this reference made part of this AGREEMENT. If the Prime CONSULTANT is, a DBE certified firm they must comply with the Commercial Useful Function (CUF) regulation outlined in the AGENCY's "DBE Program Participation Plan" and perform a minimum of 30% of the total amount of this AGREEMENT. It is recommended, but not required, that non-DBE Prime CONSULTANTS perform a minimum of 30% of the total amount of this AGREEMENT.

In the absence of a mandatory DBE goal, a voluntary SBE goal amount of ten percent of the Consultant Agreement is established. The Consultant shall develop a SBE Participation Plan prior to commencing work. Although the goal is voluntary, the outreach efforts to provide SBE maximum practicable opportunities are not.

The CONSULTANT, on a monthly basis, shall enter the amounts paid to all firms (including Prime) involved with this AGREEMENT into the wsdot.diversitycompliance.com program. Payment information shall identify any DBE Participation.

All Reports, PS&E materials, and other data furnished to the CONSULTANT by the AGENCY shall be returned. All electronic files, prepared by the CONSULTANT, must meet the requirements as outlined in Exhibit "C – Preparation and Delivery of Electronic Engineering and other Data."

All designs, drawings, specifications, documents, and other work products, including all electronic files, prepared by the CONSULTANT prior to completion or termination of this AGREEMENT are instruments of service for these SERVICES, and are the property of the AGENCY. Reuse by the AGENCY or by others, acting through or on behalf of the AGENCY of any such instruments of service, not occurring, as a part of this SERVICE, shall be without liability or legal exposure to the CONSULTANT.

Any and all notices or requests required under this AGREEMENT shall be made in writing and sent to the other party by (i) certified mail, return receipt requested, or (ii) by email or facsimile, to the address set forth below:

If to AGENCY:
Name: Rich Meredith
Agency: City of Mountlake Terrace
Address: 23204 58th Avenue W
City: Mountlake Terrace State: WA Zip: 98043
Email: rmeredith@mltwa.gov
Phone: (425) 744-6275
Facsimile:

If to CONSULTANT:
Name: Rory Cameron
Agency: Perteet, Inc.
Address: 2707 Colby Avenue, Suite 900
City: Everett State: WA Zip: 98201
Email: rory.cameron@perteet.com
Phone: (425) 252-7700
Facsimile: (425) 339-6018

IV. Time for Beginning and Completion

The CONSULTANT shall not begin any work under the terms of this AGREEMENT until authorized in writing by the AGENCY. All work under this AGREEMENT shall conform to the criteria agreed upon detailed in the AGREEMENT documents. These SERVICES must be completed by the date shown in the heading of this AGREEMENT titled "Completion Date."

The established completion time shall not be extended because of any delays attributable to the CONSULTANT, but may be extended by the AGENCY in the event of a delay attributable to the AGENCY, or because of unavoidable delays caused by an act of GOD, governmental actions, or other conditions beyond the control of the CONSULTANT. A prior supplemental AGREEMENT issued by the AGENCY is required to extend the established completion time.

V. Payment Provisions

The CONSULTANT shall be paid by the AGENCY for completed SERVICES rendered under this AGREEMENT as provided hereinafter. Such payment shall be full compensation for SERVICES performed or SERVICES rendered and for all labor, materials, supplies, equipment, and incidentals necessary to complete SERVICES. The CONSULTANT shall conform to all applicable portions of 48 CFR Part 31 (www.ecfr.gov).

A. Hourly Rates: Hourly rates are comprised of the following elements - Direct (Raw) Labor, Indirect Cost Rate, and Fee (Profit). The CONSULTANT shall be paid by the AGENCY for work done, based upon the negotiated hourly rates shown in Exhibits "D" and "E" attached hereto and by reference made part of this AGREEMENT. These negotiated hourly rates will be accepted based on a review of the CONSULTANT's direct labor rates and indirect cost rate computations and agreed upon fee. The accepted negotiated rates shall be memorialized in a final written acknowledgment between the parties. Such final written acknowledgment shall be incorporated into, and become a part of, this AGREEMENT. The initially accepted negotiated rates shall be applicable from the approval date, as memorialized in a final written acknowledgment, to 180 days following the CONSULTANT's fiscal year end (FYE) date.

   The direct (raw) labor rates and classifications, as shown on Exhibits "D" and "E" shall be subject to renegotiations for each subsequent twelve (12) month period (180 days following FYE date to 180 days following FYE date) upon written request of the CONSULTANT or the AGENCY. The written request must be made to the other party within ninety (90) days following the CONSULTANT's FYE date. If no such written request is made, the current direct (raw) labor rates and classifications as shown on Exhibits "D" and "E" will remain in effect for the twelve (12) month period.

   Conversely, if a timely request is made in the manner set forth above, the parties will commence negotiations to determine the new direct (raw) labor rates and classifications that will be applicable for the twelve (12 month period. Any agreed to renegotiated rates shall be memorialized in a final written acknowledgment between the parties. Such final written acknowledgment shall be incorporated into, and become a part of, this AGREEMENT. If requested, the CONSULTANT shall provide current payroll register and classifications to aid in negotiations. If the parties cannot reach an agreement on the direct (raw) labor rates and classifications, the AGENCY shall perform an audit of the CONSULTANT's books and records to determine the CONSULTANT's actual costs. The audit findings will establish the direct (raw) labor rates and classifications that will applicable for the twelve (12) month period.

   The fee as identified in Exhibits "D" and "E" shall represent a value to be applied throughout the life of the AGREEMENT.

   The CONSULTANT shall submit annually to the AGENCY an updated indirect cost rate within 180 days of the close of its fiscal year. An approved updated indirect cost rate shall be included in the current fiscal year rate under this AGREEMENT, even if/when other components of the hourly rate are not renegotiated. These rates will be applicable for the twelve (12) month period. At the AGENCY's option, a provisional and/or conditional indirect cost rate may be negotiated. This provisional or conditional indirect rate shall remain in effect until the updated indirect cost rate is completed and approved. Indirect cost rate costs incurred during the provisional or conditional period will not be adjusted. The CONSULTANT may request an extension of the last approved indirect cost rate for the twelve (12) month period. These requests for provisional indirect cost rate and/or extension will be considered on a case-by-case basis, and if granted, will be memorialized in a final written acknowledgment.

   The CONSULTANT shall maintain and have accessible support data for verification of the components of the hourly rates, i.e., direct (raw) labor, indirect cost rate, and fee (profit) percentage. The CONSULTANT shall bill each employee's actual classification, and actual salary plus indirect cost rate plus fee.

A. Direct Non-Salary Costs: Direct Non-Salary Costs will be reimbursed at the actual cost to the CONSULTANT. These charges may include, but are not limited to, the following items: travel, printing, long distance telephone, supplies, computer charges, and fees of sub-consultants. Air or train travel will be reimbursed only to lowest price available, unless otherwise approved by the AGENCY. The CONSULTANT shall comply with the rules and regulations regarding travel costs (excluding air, train, and rental car costs) in accordance with the WSDOT's Accounting Manual M 13-82, Chapter 10 – Travel Rules and Procedures, and all revisions thereto. Air, train, and rental card costs shall be reimbursed in accordance with 48 Code of Federal Regulations (CFR) Part 31.205-46 "Travel Costs." The billing for Direct Non-salary Costs shall include an itemized listing of the charges directly identifiable with these SERVICES. The CONSULTANT shall maintain the original supporting documents in their office. Copies of the original supporting documents shall be supplied to the STATE upon request. All above charges must be necessary for the SERVICES provided under this AGREEMENT.

B. Maximum Amount Payable: The Maximum Amount Payable by the AGENCY to the CONSULTANT under this AGREEMENT shall not exceed the amount shown in the heading of this AGREEMENT on page one (1.) The Maximum Amount Payable does not include payment for extra work as stipulated in section XIII, "Extra Work." No minimum amount payable is guaranteed under this AGREEMENT.

C. Monthly Progress Payments: Progress payments may be claimed on a monthly basis for all costs authorized in A and B above. Detailed statements shall support the monthly billings for hours expended at the rates established in Exhibit "D," including names and classifications of all employees, and billings for all direct non-salary expenses. To provide a means of verifying the billed salary costs for the CONSULTANT's employees, the AGENCY may conduct employee interviews. These interviews may consist of recording the names, titles, salary rates, and present duties of those employees performing work on the SERVICES at the time of the interview.

D. Final Payment: Final Payment of any balance due the CONSULTANT of the gross amount earned will be made promptly upon its verification by the AGENCY after the completion of the SERVICES under this AGREEMENT, contingent upon receipt of all PS&E, plans, maps, notes, reports, electronic data, and other related documents, which are required to be furnished under this AGREEMENT. Acceptance of such Final Payment by the CONSULTANT shall constitute a release of all claims for payment, which the CONSULTANT may have against the AGENCY unless such claims are specifically reserved in writing and transmitted to the AGENCY by the CONSULTANT prior to its acceptance. Said Final Payment shall not, however, be a bar to any claims that the AGENCY may have against the CONSULTANT or to any remedies the AGENCY may pursue with respect to such claims.

The payment of any billing will not constitute agreement as to the appropriateness of any item and at the time of final audit all required adjustments will be made and reflected in a final payment. In the event that such final audit reveals an overpayment to the CONSULTANT, the CONSULTANT will refund such overpayment to the AGENCY within thirty (30) calendar days of notice of the overpayment. Such refund shall not constitute a waiver by the CONSULTANT for any claims relating to the validity of a finding by the AGENCY of overpayment. Per WSDOT's "Audit Guide for Consultants," Chapter 23 "Resolution Procedures," the CONSULTANT has twenty (20) working days after receipt of the final Post Audit to begin the appeal process to the AGENCY for audit findings

E. Inspection of Cost Records: The CONSULTANT and their sub-consultants shall keep available for inspection by representatives of the AGENCY and the United States, for a period of six (6) years after receipt of final payment, the cost records and accounts pertaining to this AGREEMENT and all items related to or bearing upon these records with the following exception: if any litigation, claim or audit arising out of, in connection with, or related to this AGREEMENT is initiated before the expiration of the six (6) year period, the cost records and accounts shall be retained until such litigation, claim, or audit involving the records is completed. An interim or post audit may be performed on this AGREEMENT. The audit, if any, will be performed by the State Auditor, WSDOT's Internal Audit Office and /or at the request of the AGENCY's Project Manager.

VI. Sub-Contracting

The AGENCY permits subcontracts for those items of SERVICES as shown in Exhibit "A" attached hereto and by this reference made part of this AGREEMENT.

The CONSULTANT shall not subcontract for the performance of any SERVICE under this AGREEMENT without prior written permission of the AGENCY. No permission for subcontracting shall create, between the AGENCY and sub-consultant, any contract or any other relationship.

Compensation for this sub-consultant SERVICES shall be based on the cost factors shown on Exhibit "E" attached hereto and by this reference made part of this AGREEMENT.

The SERVICES of the sub-consultant shall not exceed its maximum amount payable identified in each sub consultant cost estimate unless a prior written approval has been issued by the AGENCY.

All reimbursable direct labor, indirect cost rate, direct non-salary costs and fee costs for the sub-consultant shall be negotiated and substantiated in accordance with section V "Payment Provisions" herein and shall be memorialized in a final written acknowledgment between the parties

All subcontracts shall contain all applicable provisions of this AGREEMENT, and the CONSULTANT shall require each sub-consultant or subcontractor, of any tier, to abide by the terms and conditions of this AGREEMENT. With respect to sub-consultant payment, the CONSULTANT shall comply with all applicable sections of the STATE's Prompt Payment laws as set forth in RCW 39.04.250 and RCW 39.76.011.

The CONSULTANT, sub-recipient, or sub-consultant shall not discriminate on the basis of race, color, national origin, or sex in the performance of this AGREEMENT. The CONSULTANT shall carry out applicable requirements of 49 CFR Part 26 in the award and administration of DOT-assisted contracts. Failure by the CONSULTANT to carry out these requirements is a material breach of this AGREEMENT, which may result in the termination of this AGREEMENT or such other remedy as the recipient deems appropriate.

VII. Employment and Organizational Conflict of Interest

The CONSULTANT warrants that they have not employed or retained any company or person, other than a bona fide employee working solely for the CONSULTANT, to solicit or secure this contract, and that it has not paid or agreed to pay any company or person, other than a bona fide employee working solely for the CONSULTANT, any fee, commission, percentage, brokerage fee, gift, or any other consideration, contingent upon or resulting from the award or making of this agreement. For breach or violation of this warrant, the AGENCY shall have the right to annul this AGREEMENT without liability or, in its discretion, to deduct from this AGREEMENT price or consideration or otherwise recover the full amount of such fee, commission, percentage, brokerage fee, gift, or contingent fee.

Any and all employees of the CONSULTANT or other persons while engaged in the performance of any work or services required of the CONSULTANT under this AGREEMENT, shall be considered employees of the CONSULTANT only and not of the AGENCY, and any and all claims that may arise under any Workmen's Compensation Act on behalf of said employees or other persons while so engaged, and any and all claims made by a third party as a consequence of any act or omission on the part of the CONSULTANT's employees or other persons while so engaged on any of the work or services provided to be rendered herein, shall be the sole obligation and responsibility of the CONSULTANT.

The CONSULTANT shall not engage, on a full- or part-time basis, or other basis, during the period of this AGREEMENT, any professional or technical personnel who are, or have been, at any time during the period of this AGREEMENT, in the employ of the United States Department of Transportation or the AGENCY, except regularly retired employees, without written consent of the public employer of such person if he/she will be working on this AGREEMENT for the CONSULTANT.

VIII. Nondiscrimination

During the performance of this AGREEMENT, the CONSULTANT, for itself, its assignees, sub-consultants, subcontractors and successors in interest, agrees to comply with the following laws and regulations:

- Title VI of the Civil Rights Act of 1964

  (42 U.S.C. Chapter 21 Subchapter V § 2000d through 2000d-4a)
- Federal-aid Highway Act of 1973 (23 U.S.C. Chapter 3 § 324)
- Rehabilitation Act of 1973

  (29 U.S.C. Chapter 16 Subchapter V § 794)
- Age Discrimination Act of 1975 (42 U.S.C. Chapter 76 § 6101 *et. seq.*)
- Civil Rights Restoration Act of 1987 (Public Law 100-259)
- American with Disabilities Act of 1990 (42 U.S.C. Chapter 126 § 12101 *et. seq.*)
- 23 CFR Part 200
- 49 CFR Part 21
- 49 CFR Part 26
- RCW 49.60.180

In relation to Title VI of the Civil Rights Act of 1964, the CONSULTANT is bound by the provisions of Exhibit "F" attached hereto and by this reference made part of this AGREEMENT, and shall include the attached Exhibit "F" in every sub-contract, including procurement of materials and leases of equipment, unless exempt by the Regulations or directives issued pursuant thereto.

IX. Termination of Agreement

The right is reserved by the AGENCY to terminate this AGREEMENT at any time with or without cause upon ten (10) days written notice to the CONSULTANT.

In the event this AGREEMENT is terminated by the AGENCY, other than for default on the part of the CONSULTANT, a final payment shall be made to the CONSULTANT for actual hours charged at the time of termination of this AGREEMENT, plus any direct non-salary costs incurred up to the time of termination of this AGREEMENT.

No payment shall be made for any SERVICES completed after ten (10) days following receipt by the CONSULTANT of the notice to terminate. If the accumulated payment made to the CONSULTANT prior to Notice of Termination exceeds the total amount that would be due when computed as set forth in paragraph two (2) of this section, then no final payment shall be due and the CONSULTANT shall immediately reimburse the AGENCY for any excess paid.

If the services of the CONSULTANT are terminated by the AGENCY for default on the part of the CONSULTANT, the above formula for payment shall not apply.

In the event of a termination for default, the amount to be paid to the CONSULTANT shall be determined by the AGENCY with consideration given to the actual costs incurred by the CONSULTANT in performing SERVICES to the date of termination, the amount of SERVICES originally required which was satisfactorily completed to date of termination, whether that SERVICE is in a form or a type which is usable to the AGENCY at the time of termination, the cost to the AGENCY of employing another firm to complete the SERVICES required and the time which may be required to do so, and other factors which affect the value to the AGENCY of the SERVICES performed at the time of termination. Under no circumstances shall payment made under this subsection exceed the amount, which would have been made using the formula set forth in paragraph two (2) of this section.

If it is determined for any reason, that the CONSULTANT was not in default or that the CONSULTANT's failure to perform is without the CONSULTANT's or its employee's fault or negligence, the termination shall be deemed to be a termination for the convenience of the AGENCY. In such an event, the CONSULTANT would be reimbursed for actual costs in accordance with the termination for other than default clauses listed previously.

The CONSULTANT shall, within 15 days, notify the AGENCY in writing, in the event of the death of any member, partner, or officer of the CONSULTANT or the death or change of any of the CONSULTANT's supervisory and/or other key personnel assigned to the project or disaffiliation of any principally involved CONSULTANT employee.

The CONSULTANT shall also notify the AGENCY, in writing, in the event of the sale or transfer of 50% or more of the beneficial ownership of the CONSULTANT within 15 days of such sale or transfer occurring. The CONSULTANT shall continue to be obligated to complete the SERVICES under the terms of this AGREEMENT unless the AGENCY chooses to terminate this AGREEMENT for convenience or chooses to renegotiate any term(s) of this AGREEMENT. If termination for convenience occurs, final payment will be made to the CONSULTANT as set forth in the second and third paragraphs of this section.

Payment for any part of the SERVICES by the AGENCY shall not constitute a waiver by the AGENCY of any remedies of any type it may have against the CONSULTANT for any breach of this AGREEMENT by the CONSULTANT, or for failure of the CONSULTANT to perform SERVICES required of it by the AGENCY.

Forbearance of any rights under the AGREEMENT will not constitute waiver of entitlement to exercise those rights with respect to any future act or omission by the CONSULTANT.

X. Changes of Work

The CONSULTANT shall make such changes and revisions in the completed work of this AGREEMENT as necessary to correct errors appearing therein, without additional compensation thereof. Should the AGENCY find it desirable for its own purposes to have previously satisfactorily completed SERVICES or parts thereof changed or revised, the CONSULTANT shall make such revisions as directed by the AGENCY. This work shall be considered as Extra Work and will be paid for as herein provided under section XIII "Extra Work."

XI. Disputes

Any disputed issue not resolved pursuant to the terms of this AGREEMENT shall be submitted in writing within 10 days to the Director of Public Works or AGENCY Engineer, whose decision in the matter shall be final and binding on the parties of this AGREEMENT; provided however, that if an action is brought challenging the Director of Public Works or AGENCY Engineer's decision, that decision shall be subject to judicial review. If the parties to this AGREEMENT mutually agree, disputes concerning alleged design errors will be conducted under the procedures found in Exhibit "J". In the event that either party deem it necessary to institute legal action or proceeding to enforce any right or obligation under this AGREEMENT, this action shall be initiated in the Superior Court of the State of Washington, situated in the county in which the AGENCY is located. The parties hereto agree that all questions shall be resolved by application of Washington law and that the parties have the right of appeal from such decisions of the Superior Court in accordance with the laws of the State of Washington. The CONSULTANT hereby consents to the personal jurisdiction of the Superior Court of the State of Washington, situated in the county in which the AGENCY is located.

XII. Legal Relations

The CONSULTANT, any sub-consultants, and the AGENCY shall comply with all Federal, State, and local laws, rules, codes, regulations and all AGENCY policies and directives, applicable to the work to be performed under this AGREEMENT. This AGREEMENT shall be interpreted and construed in accordance with the laws of the State of Washington.

The CONSULTANT shall defend, indemnify, and hold the State of Washington (STATE) and the AGENCY and their officers and employees harmless from all claims, demands, or suits at law or equity arising in whole or in part from the negligence of, or the breach of any obligation under this AGREEMENT by, the CONSULTANT or the CONSULTANT's agents, employees, sub consultants, subcontractors or vendors, of any tier, or any other persons for whom the CONSULTANT may be legally liable; provided that nothing herein shall require a CONSULTANT

to defend or indemnify the STATE and the AGENCY and their officers and employees against and hold harmless the STATE and the AGENCY and their officers and employees from claims, demands or suits based solely upon the negligence of, or breach of any obligation under this AGREEMENT by the STATE and the AGENCY, their agents, officers, employees, sub-consultants, subcontractors or vendors, of any tie , or any other persons for whom the STATE and /or the AGENCY may be legally liable; and provided further that if the claims or suits are caused by or result from the concurrent negligence of (a) the CONSULTANT or the CONSULTANT's agents, employees, sub-consultants, subcontractors or vendors, of any tier, or any other persons for whom the CONSULTANT is legally liable, and (b) the STATE and/or AGENCY, their agents, officers, employees, sub-consultants, subcontractors and or vendors, of any tier, or any other persons for whom the STATE and/or AGENCY may be legally liable, the defense and indemnity obligation shall be valid and enforceable only to the extent of the CONSULTANT's negligence or the negligence of the CONSULTANT's agents, employees, sub-consultants, subcontractors or vendors, of any tier, or any other persons for whom the CONSULTANT may be legally liable. This provision shall be included in any AGREEMENT between CONSULTANT and any sub-consultant, subcontractor and vendor, of any tier.

The CONSULTANT shall also defend, indemnify, and hold the STATE and the AGENCY and their officers and employees harmless from all claims, demands, or suits at law or equity arising in whole or in part from the alleged patent or copyright infringement or other allegedly improper appropriation or use of trade secrets, patents, proprietary information, know-how, copyright rights or inventions by the CONSULTANT or the CONSULTANT's agents, employees, sub-consultants, subcontractors or vendors, of any tier, or any other persons for whom the CONSULTANT may be legally liable, in performance of the Work under this AGREEMENT or arising out of any use in connection with the AGREEMENT of methods, processes, designs, information or other items furnished or communicated to STATE and/or the AGENCY, their agents, officers and employees pursuant to the AGREEMENT; provided that this indemnity shall not apply to any alleged patent or copyright infringement or other allegedly improper appropriation or use of trade secrets, patents, proprietary information, know-how, copyright rights or inventions resulting from STATE and/or AGENCY's, their agents', officers and employees' failure to comply with specific written instructions regarding use provided to STATE and/or AGENCY, their agents, officers and employees by the CONSULTANT, its agents, employees, sub-consultants, subcontractors or vendors, of any tier, or any other persons for whom the CONSULTANT may be legally liable.

The CONSULTANT's relation to the AGENCY shall be at all times as an independent contractor.

Notwithstanding any determination by the Executive Ethics Board or other tribunal, the AGENCY may, in its sole discretion, by written notice to the CONSULTANT terminate this AGREEMENT if it is found after due notice and examination by the AGENCY that there is a violation of the Ethics in Public Service Act, Chapter 42.52 RCW; or any similar statute involving the CONSULTANT in the procurement of, or performance under, this AGREEMENT.

The CONSULTANT specifically assumes potential liability for actions brought by the CONSULTANT's own employees or its agents against the STATE and/or the AGENCY and, solely for the purpose of this indemnification and defense, the CONSULTANT specifically waives any immunity under the state industrial insurance law, Title 51 RCW. The Parties have mutually negotiated this waiver.

Unless otherwise specified in this AGREEMENT, the AGENCY shall be responsible for administration of construction contracts, if any, on the project. Subject to the processing of a new sole source, or an acceptable supplemental AGREEMENT, the CONSULTANT shall provide On-Call assistance to the AGENCY during contract administration. By providing such assistance, the CONSULTANT shall assume no responsibility for proper construction techniques, job site safety, or any construction contractor's failure to perform its work in accordance with the contract documents.

The CONSULTANT shall obtain and keep in force during the terms of this AGREEMENT, or as otherwise required, the following insurance with companies or through sources approved by the State Insurance Commissioner pursuant to Title 48 RCW.

Insurance Coverage

A. Worker's compensation and employer's liability insurance as required by the STATE.

B. Commercial general liability insurance written under ISO Form CG 00 01 12 04 or its equivalent with minimum limits of one million dollars ($1,000,000.00) per occurrence and two million dollars ($2,000,000.00) in the aggregate for each policy period.

C. Business auto liability insurance written under ISO Form CG 00 01 10 01 or equivalent providing coverage for any "Auto" (Symbol 1) used in an amount not less than a one million dollar ($1,000,000.00) combined single limit for each occurrence.

Excepting the Worker's Compensation Insurance and any Professional Liability Insurance, the STATE and AGENCY, their officers, employees, and agents will be named on all policies of CONSULTANT and any sub-consultant and/or subcontractor as an additional insured (the "AIs"), with no restrictions or limitations concerning products and completed operations coverage. This coverage shall be primary coverage and non-contributory and any coverage maintained by the AIs shall be excess over, and shall not contribute with, the additional insured coverage required hereunder. The CONSULTANT's and the sub-consultant's and/or subcontractor's insurer shall waive any and all rights of subrogation against the AIs. The CONSULTANT shall furnish the AGENCY with verification of insurance and endorsements required by this AGREEMENT. The AGENCY reserves the right to require complete, certified copies of all required insurance policies at any time.

All insurance shall be obtained from an insurance company authorized to do business in the State of Washington. The CONSULTANT shall submit a verification of insurance as outlined above within fourteen (14) days of the execution of this AGREEMENT to:

Name: Rich Meredith

Agency: City of Mountlake Terrace

Address: 23204 58th Avenue W

City: Mountlake Terrace State: WA Zip: 98043

Email: rmeredith@mltwa.gov

Phone: (425) 744-6275

Facsimile:

No cancellation of the foregoing policies shall be effective without thirty (30) days prior notice to the AGENCY.

The CONSULTANT's professional liability to the AGENCY, including that which may arise in reference to section IX "Termination of Agreement" of this AGREEMENT, shall be limited to the accumulative amount of the authorized AGREEMENT or one million dollars ($1,000,000.00), whichever is greater, unless the limit of liability is increased by the AGENCY pursuant to Exhibit H. In no case shall the CONSULTANT's professional liability to third parties be limited in any way.

The parties enter into this AGREEMENT for the sole benefit of the parties, and to the exclusion of any third party, and no third party beneficiary is intended or created by the execution of this AGREEMENT.

The AGENCY will pay no progress payments under section V "Payment Provisions" until the CONSULTANT has fully complied with this section. This remedy is not exclusive; and the AGENCY may take such other action as is available to it under other provisions of this AGREEMENT, or otherwise in law.

XIII. Extra Work

A. The AGENCY may at any time, by written order, make changes within the general scope of this AGREEMENT in the SERVICES to be performed.

B. If any such change causes an increase or decrease in the estimated cost of, or the time required for, performance of any part of the SERVICES under this AGREEMENT, whether or not changed by the order, or otherwise affects any other terms and conditions of this AGREEMENT, the AGENCY shall make an equitable adjustment in the: (1) maximum amount payable; (2) delivery or completion schedule, or both; and (3) other affected terms and shall modify this AGREEMENT accordingly.

C. The CONSULTANT must submit any "request for equitable adjustment," hereafter referred to as "CLAIM," under this clause within thirty (30) days from the date of receipt of the written order. However, if the AGENCY decides that the facts justify it, the AGENCY may receive and act upon a CLAIM submitted before final payment of this AGREEMENT.

D. Failure to agree to any adjustment shall be a dispute under the section XI "Disputes" clause. However, nothing in this clause shall excuse the CONSULTANT from proceeding with the AGREEMENT as changed.

E. Notwithstanding the terms and conditions of paragraphs (A.) and (B.) above, the maximum amount payable for this AGREEMENT, shall not be increased or considered to be increased except by specific written supplement to this AGREEMENT.

XIV. Endorsement of Plans

If applicable, the CONSULTANT shall place their endorsement on all plans, estimates, or any other engineering data furnished by them.

XV. Federal Review

The Federal Highway Administration shall have the right to participate in the review or examination of the SERVICES in progress.

XVI. Certification of the Consultant and the Agency

Attached hereto as Exhibit "G-1(a and b)" are the Certifications of the CONSULTANT and the AGENCY, Exhibit "G-2" Certification Regarding Debarment, Suspension and Other Responsibility Matters - Primary Covered Transactions, Exhibit "G-3" Certification Regarding the Restrictions of the Use of Federal Funds for Lobbying and Exhibit "G-4" Certificate of Current Cost or Pricing Data. Exhibit "G-3" is required only in AGREEMENTS over one hundred thousand dollars ($100,000.00) and Exhibit "G-4" is required only in AGREEMENTS over five hundred thousand dollars ($500,000.00.) These Exhibits must be executed by the CONSULTANT, and submitted with the master AGREEMENT, and returned to the AGENCY at the address listed in section III "General Requirements" prior to its performance of any SERVICES under this AGREEMENT.

XVII. Complete Agreement

This document and referenced attachments contain all covenants, stipulations, and provisions agreed upon by the parties. No agent, or representative of either party has authority to make, and the parties shall not be bound by or be liable for, any statement, representation, promise or agreement not set forth herein. No changes, amendments, or modifications of the terms hereof shall be valid unless reduced to writing and signed by the parties as a supplement to this AGREEMENT.

XVIII. Execution and Acceptance

This AGREEMENT may be simultaneously executed in several counterparts, each of which shall be deemed to be an original having identical legal effect. The CONSULTANT does hereby ratify and adopt all statements, representations, warranties, covenants, and AGREEMENT's contained in the proposal, and the supporting material submitted by the CONSULTANT, and does hereby accept this AGREEMENT and agrees to all of the terms and conditions thereof.

XIX. Protection of Confidential Information

The CONSULTANT acknowledges that some of the material and information that may come into its possession or knowledge in connection with this AGREEMENT or its performance may consist of information that is exempt from disclosure to the public or other unauthorized persons under either chapter 42.56 RCW or other local, state, or federal statutes ("State's Confidential Information"). The "State's Confidential Information" includes, but is not limited to, names, addresses, Social Security numbers, e-mail addresses, telephone numbers, financial profiles credit card information, driver's license numbers, medical data, law enforcement records (or any other information identifiable to an individual), STATE and AGENCY source code or object code, STATE and AGENCY security data, non-public Specifications, STATE and AGENCY non-publicly available data, proprietary software, STATE and AGENCY security data, or information which may jeopardize any part of the project that relates to any of these types of information. The CONSULTANT agrees to hold the State's Confidential Information in strictest confidence and not to make use of the State's Confidential Information for any purpose other than the performance of this AGREEMENT, to release it only to authorized employees, sub-consultants or subcontractors requiring such information for the purposes of carrying out this AGREEMENT, and not to release, divulge, publish, transfer, sell, disclose, or otherwise make it known to any other party without the AGENCY's express written consent or as provided by law. The CONSULTANT agrees to release such information or material only to employees, sub-consultants or subcontractors who have signed a nondisclosure AGREEMENT, the terms of which have been previously approved by the AGENCY. The CONSULTANT agrees to implement physical, electronic, and managerial safeguards to prevent unauthorized access to the State's Confidential Information.

Immediately upon expiration or termination of this AGREEMENT, the CONSULTANT shall, at the AGENCY's option: (i) certify to the AGENCY that the CONSULTANT has destroyed all of the State's Confidential Information; or (ii) returned all of the State's Confidential Information to the AGENCY; or (iii) take whatever other steps the AGENCY requires of the CONSULTANT to protect the State's Confidential Information.

As required under Executive Order 00-03, the CONSULTANT shall maintain a log documenting the following: the State's Confidential Information received in the performance of this AGREEMENT; the purpose(s) for which the State's Confidential Information was received; who received, maintained, and used the State's Confidential Information; and the final disposition of the State's Confidential Information. The CONSULTANT's records shall be subject to inspection, review, or audit upon reasonable notice from the AGENCY.

The AGENCY reserves the right to monitor, audit, or investigate the use of the State's Confidential Information collected, used, or acquired by the CONSULTANT through this AGREEMENT. The monitoring, auditing, or investigating may include, but is not limited to, salting databases.

Violation of this section by the CONSULTANT or its sub-consultants or subcontractors may result in termination of this AGREEMENT and demand for return of all State's Confidential Information, monetary damages, or penalties

It is understood and acknowledged that the CONSULTANT may provide the AGENCY with information, which is proprietary and/or confidential during the term of this AGREEMENT. The parties agree to maintain the confidentiality of such information during the term of this AGREEMENT and afterwards. All materials containing such proprietary and/or confidential information shall be clearly identified and marked as "Confidential" and shall be returned to the disclosing party at the conclusion of the SERVICES under this AGREEMENT.

The CONSULTANT shall provide the AGENCY with a list of all information and materials it considers confidential and/or proprietary in nature: (a) at the commencement of the term of this AGREEMENT, or (b) as soon as such confidential or proprietary material is developed. "Proprietary and/or confidential information" is not meant to include any information which, at the time of its disclosure: (i) is already known to the other party; (ii) is rightfully disclosed to one of the parties by a third party that is not acting as an agent or representative for the other party; (iii) is independently developed by or for the other party; (iv) is publicly known; or (v) is generally utilized by unaffiliated third parties engaged in the same business or businesses as the CONSULTANT.

The parties also acknowledge that the AGENCY is subject to Washington State and federal public disclosure laws. As such, the AGENCY shall maintain the confidentiality of all such information marked proprietary and or confidential or otherwise exempt, unless such disclosure is required under applicable state or federal law. If a public disclosure request is made to view materials identified as "Proprietary and/or confidential information" or otherwise exempt information, the AGENCY will notify the CONSULTANT of the request and of the date that such records will be released to the requester unless the CONSULTANT obtains a court order from a court of competent jurisdiction enjoining that disclosure. If the CONSULTANT fails to obtain the court order enjoining disclosure, the AGENCY will release the requested information on the date specified.

The CONSULTANT agrees to notify the sub-consultant of any AGENCY communication regarding disclosure that may include a sub-consultant's proprietary and/or confidential information. The CONSULTANT notification to the sub-consultant will include the date that such records will be released by the AGENCY to the requester and state that unless the sub-consultant obtains a court order from a court of competent jurisdiction enjoining that disclosure the AGENCY will release the requested information. If the CONSULTANT and/or sub-consultant fail to obtain a court order or other judicial relief enjoining the AGENCY by the release date, the CONSULTANT shall waive and release and shall hold harmless and indemnify the AGENCY from all claims of actual or alleged damages, liabilities, or costs associated with the AGENCY's said disclosure of sub-consultants' information.

XX. Records Maintenance

During the progress of the Work and SERVICES provided hereunder and for a period of not less than six (6) years from the date of final payment to the CONSULTANT, the CONSULTANT shall keep, retain, and maintain all "documents" pertaining to the SERVICES provided pursuant to this AGREEMENT. Copies of all "documents" pertaining to the SERVICES provided hereunder shall be made available for review at the CONSULTANT's place of business during normal working hours. If any litigation, claim, or audit is commenced, the CONSULTANT shall cooperate with AGENCY and assist in the production of all such documents. "Documents" shall be retained until all litigation, claims or audit findings have been resolved even though such litigation, claim, or audit continues past the six (6) year retention period.

For purposes of this AGREEMENT, "documents" means every writing or record of every type and description, including electronically stored information ("ESI"), that is in the possession, control, or custody of the CONSULTANT, including, without limitation, any and all correspondences, contracts, AGREEMENTs, appraisals, plans, designs, data, surveys, maps, spreadsheets, memoranda, stenographic or handwritten notes, reports, records, telegrams, schedules, diaries, notebooks, logbooks, invoices, accounting records, work sheets, charts, notes, drafts, scribblings, recordings, visual displays, photographs, minutes of meetings, tabulations, computations, summaries, inventories, and writings regarding conferences, conversations or telephone conversations, and any and all other taped, recorded, written, printed or typed matters of any kind or description; every copy of the foregoing whether or not the original is in the possession, custody, or control of the CONSULTANT, and every copy of any of the foregoing, whether or not such copy is a copy identical to an original, or whether or not such copy contains any commentary or notation whatsoever that does not appear on the original.

For purposes of this AGREEMENT, "ESI" means any and all computer data or electronic recorded media of any kind, including "Native Files", that are stored in any medium from which it can be retrieved and examined, either directly or after translation into a reasonably useable form. ESI may include information and/or documentation stored in various software programs such as Email, Outlook, Word, Excel, Access, Publisher, PowerPoint, Adobe Acrobat, SQL databases, or any other software or electronic communication programs or databases that the CONSULTANT may use in the performance of its operations. ESI may be located on network servers, backup tapes, smart phones, thumb drives, CDs, DVDs, floppy disks, work computers, cell phones, laptops, or any other electronic device that CONSULTANT uses in the performance of its Work or SERVICES hereunder, including any personal devices used by the CONSULTANT or any sub-consultant at home.

"Native files" are a subset of ESI and refer to the electronic format of the application in which such ESI is normally created, viewed, and /or modified

The CONSULTANT shall include this section XX "Records Maintenance" in every subcontract it enters into in relation to this AGREEMENT and bind the sub-consultant to its terms, unless expressly agreed to otherwise in writing by the AGENCY prior to the execution of such subcontract.

In witness whereof, the parties hereto have executed this AGREEMENT as of the day and year shown in the "Execution Date" box on page one (1) of this AGREEMENT.

Jeff Niten

Signature

2/2/2024

Date

Jesse A Thomsen

Signature

2/5/2024

Date

Any modification, change, or reformation of this AGREEMENT shall require approval as to form by the Office of the Attorney General.

DocuSign Envelope ID: E98D248F-A90B-4A99-AF58-388D454E7E2C

Exhibit A
Scope of Work

Project No.

See attached Exhibit A - Scope of Work

DocuSign Envelope ID: E98D248F-A90B-4A99-AF58-388D454E7E2C

EXHIBIT A
SCOPE OF WORK
City of Mountlake Terrace
Main Street Reconstruction Project – Phases 2 and 3

PROJECT BACKGROUND/DESCRIPTION

The following Scope of Work outlines the effort required to complete Plans, Specifications, and Estimates for Phases 2 and 3 of the Main Street Reconstruction project ("Project") for the City of Mountlake Terrace ("City"). Phase 2 includes final design for three roadway corridors: 56th Avenue W from 236th Street SW to 230th Street SW, 234th Street SW from 56th Avenue W to 58th Avenue W and 232nd Street SW from 56th Avenue W to 58th Avenue W.

This scope outlines the design efforts, supplemental services, and coordination required to achieve the City's Project goals. Perteet. ("Consultant") will provide the following services:

Phase 2 Improvements include the following project elements:

- Revised curb lines to remove curb bulbs (where possible)
- Revised ADA ramp design
- Revised driveway profiles
- Revised back of walk treatments (where necessary to standardize design elements)
- Revisions to the proposed surface water detention system
- Evaluate the need for additional surface water detention for future developments
- Inclusion of stormwater management facilities, as needed
- Replace existing 12 inch watermain with a new 16 inch Diameter water main on 56th Avenue W and extension of the new water main past the intersections improvements on 230th Street SW
- Revised locations for larger SnoPUD undergrounding structures to be behind the sidewalk
- Finalize undergrounding designs for 234th Street SW and 232nd Street SW
- Wider sidewalks on the north side of 234th Street SW
- Conversion of the RRFB systems design for the 234th Street SW and 230th Street SW intersections to full signal systems
- Conversion of the existing RRFB system at the 58th Avenue W and 236th Street SW intersection to a full signal
- Upgrades to the existing signal system at 56th Avenue W and 232nd Street SW
- Vehicle charging stations on 234th Avenue SW and 232nd Avenue SW
- Revised roadway illumination design on all three corridors
- Fiber interconnect for all signals on 56th Avenue W
- Revised channelization on 56th Avenue W
- Eliminate planter locations on 56th Avenue W

DocuSign Envelope ID: E98D248F-A90B-4A99-AF58-388D454E7E2C

- Revise tree spacing based on updated illumination design for 56th Avenue W
- Revised planter designs on 234th Street SW and 232nd Street SW
- Revise irrigation designs on all three corridors
- Revised urban design elements
- Update property tie in details based on ROW/easement negotiations
- Coordinate with developers for frontage improvement designs

Phase 3 includes preliminary design (10% level) of 57th Avenue W between 230th Street SW and 236th Street SW. 57th Avenue W between 232nd Street SW and 236th Street SW will be a new roadway extension and will be designed as a Woonerf. Phase 3 elements include:

- Transportation Analysis and Reporting
- Alternatives Analysis (up to three options)
- Preliminary (10%) layout of preferred alternative
- Preliminary Illumination Analysis
- Design of decorative 5G poles to match the current decorative pole design
- Preliminary Stormwater Memorandum
- Preliminary Right-of-Way Determination and Cost Estimate
- Public Involvement
- Coordination with Utilities and Stakeholders
- Conceptual Cross Sections and Urban Design Report
- Urban Design Perspective
- Permit Matrix

Consultant's services will be limited to those expressly set forth herein. If the service is not specifically identified herein, it is expressly excluded. Consultant will have no other obligations, duties, or responsibilities associated with the project except as expressly provided in this Agreement.

Transferring Budget within Contract Maximum: The level of effort is specified in the scope of services. The budget may be transferred between discipline tasks at the discretion of the Consultant, provided that the total contracted amount is not exceeded. The Consultant will have the flexibility to manage budget within a given discipline on a subtask level.

GENERAL PROJECT ASSUMPTIONS

The following assumptions were identified to provide direction with design:

- The project will pursue funding through RAISE grant, TIB Grant, PSRC/STP Grant, and other City funding sources.
- Updates to the current NEPA Documentation will NOT be required.
- The Project will require ROW Acquisition Services and all ROW Services rendered will assume federal funding, guidelines, and requirements.

DocuSign Envelope ID: E98D248F-A90B-4A99-AF58-388D454E7E2C

- The Consultant shall prepare all drawings using AutoCAD Civil 3D 2022 and Consultant Drafting Standards.

City-Provided Items:

- Submittal reviews, comments, and approvals.
- Public notices, property owner mailings, postage.
- Host and update project website.
- Meeting room or virtual meeting arrangements and arrange for public open houses and community meetings.
- Right-of-entries for surveying, if required.
- Available traffic data and vehicle classification.
- Provide Consultant with existing record drawings (as-built plans) of street and public utilities (water, sanitary sewer, storm), right-of-way (ROW) plans, horizontal and vertical monument information, GIS maps and other applicable information, as may be available.
- Electronic native files from previous work-to-date on Phase 2 – including CADD basefiles, sheet files, drainage reports, and CADD exhibit files for reports.
- Record of comments on the last project submittal.
- Documentation of known stormwater conveyance capacity constraints in the project area and downstream, history of drainage complaints in the project area, and applicable basin plans.
- Provide Consultant with City Standard details to be incorporated into the project.
- Provide Consultant with all City standard contract documents, GSPs, and City bid forms in Microsoft Word, Microsoft Excel, and Adobe PDF formats, as applicable.

SCOPE OF WORK

Task 1 – Project Management and Coordination

Overall project management and coordination work elements include:

1.1 General Project Management and Meetings

The Consultant will coordinate with the City of Mountlake Terrace on a regular basis to keep the City's project manager informed about project progress, project issues and schedule. Regular communication with the City will occur on a weekly basis, including a weekly email summary of work completed and anticipated work the next week. The Consultant will prepare a Work Plan to be distributed at the project kickoff meeting. This work element will also include preparing an Action Items Log and a Record of Decision and keeping these updated throughout the duration of the project.

The Consultant will attend one (1) project kickoff meeting with the City and up to forty (40) project status meetings with the City. These meetings under this work element will include the following participation by the Consultant team:

DocuSign Envelope ID: E98D248F-A90B-4A99-AF58-388D454E7E2C

- Kickoff meeting will include attended by Perteet discipline leads, with up to six (6) additional staff from the Perteet team.
- Up to forty (40) meetings attended by Perteet with up to two (2) staff from the Perteet team.
- Subconsultant attendance at meetings related to design work will be included under those individual design tasks.
- The Consultant will prepare agendas and meeting notes/action items and distribute to attendees.

In the event that the City has a change in the City's project manager, the Consultant will meet with the new project manager, provide a summary of design and progress, provide a summary of decisions made, and provide past deliverables to date. This effort is included in this task. If changes to completed design efforts and/or Scope of Services are requested due to the change in City's project manager, this will require a supplement to the Agreement.

1.2 Project Schedule, Budget, and Team Management

The Consultant will develop an overall project schedule, which will include a detailed schedule by task, for the project phases, through bid advertisement for the full project. The Consultant will prepare a draft and final schedule for the City review, and then the Consultant will prepare two (2) schedule updates as the project progresses, when requested by the City. The Consultant will also manage the Consultant budgets, monitor staff and subconsultants, manage change and prepare amendments, and monitor work progress under this work element.

1.3 Progress Reports, Invoicing, Underutilized Disadvantaged Business Enterprise (UDBE) Reporting

As part of the project, the Consultant will prepare monthly progress reports that describe the work items and percentage of work items that were accomplished during a given month, as well as a forecast of work to be completed over the following month. Progress report will include a status of budget, spent, and remaining. The monthly progress reports will also identify other issues that may be occurring, if any. The Consultant will submit these monthly progress reports to the City's Project Manager with the monthly invoices. The monthly invoices will bill by individual tasks. The Consultant Project Manager will notify City's Project Manager, in writing (memo format), of any out of scope and/or budgetary issues that are inconsistent with this Scope of Services.

Each month the Consultant will prepare a report showing the status progress towards meeting the UDBE goals and submit this to the City with the monthly progress report and invoice.

Assumptions:

- This contract duration shall be no longer than 24 months.
- Project kickoff meeting will be held at virtually or at the City's office.
- Project meetings will be held virtually.
- Maximum of two project schedule updates will be prepared.
- Meetings between Consultants will be conducted under other scope tasks.

Deliverables:

DocuSign Envelope ID: E98D248F-A90B-4A99-AF58-388D454E7E2C

- Kickoff Meeting Agenda and Summary of Meeting Notes/Action Items
- Project Schedule (Microsoft Project format) and up to two updates
- Project Meeting Agendas for up to 40 meetings and notes/action items
- Invoices and Progress Reports
- UDBE Status Report

The Consultant will conduct a filed review and site walkthrough to identify items that have changed since the survey was completed and determine property restoration needs.

Deliverables:

- Monthly progress reports and invoices (24 months)
- Project Schedule and Updates

Task 2 – Review of Available Information (56th – Phase 2)

The Consultant will review available information and files from the previous work on the Main Street project. The goal of the review is for the team to familiarize themselves with the design and identify opportunities for improving the design and areas that need to be finalized.

The Consultant staff will attend submittal review meetings with the City to review comments on the previous 90% submittal prior to updating the design for the 60% submittal.

Assumptions:

- The City will provide all available files from the previous design team.

Deliverables:

- Meeting agenda and note from the review meeting

Task 3 – Supplemental Survey and Basemapping (56th – Phase 2)

The Consultant shall perform survey pick-ups of changed conditions along 56th Avenue W prior to the 100% Submittal. The basemap will be updated with the supplemental information.

CADD mapping work to prepare 1"=20' topographic basemap and digital terrain model (DTM) in AutoCAD format of the project within the limits described above. KPG Psomas mapping standards and Civil 3D version 2018 will be utilized in basemap preparation.

Deliverables:

- Updated basemapping in CAD format

Task 4 – Right-of-Way Acquisition (56th – Phase 2)

DocuSign Envelope ID: E98D248F-A90B-4A99-AF58-388D454E7E2C

4.1 Update Property Owner Exhibits

Property owner exhibits will be updated to address changes in frontage conditions associated with the sidewalk and structure relocations. It is assumed that 20 exhibits will require revisions.

Deliverables:

- Owner exhibits (PDF format)

4.2 Update Legal Descriptions and Exhibits

The Consultant shall update legal descriptions and exhibits for parcels with changed conditions. Work will be performed by a licensed surveyor. Documents will be stamped and signed. Assumes 20 parcels will require revisions.

Deliverables:

- Legal descriptions (PDF format)

4.3 Right-of-Way Appraisal and Acquisition Services

This work will include updating the right of way funding estimate based on revised right of way and easement needs, new appraisals, property owner negotiations and acquisition documentation, and WSDOT certification support. (Assumes 40 parcels).

Assumptions:

The ROW or Construction phase of the project will be eligible for federal funding and that WSDOT ROW Certification is required.
The City requires no more than forty (40) whole or partial acquisitions.
No design changes will occur after the initial appraisal assignment authorized.
Legal descriptions suitable for recording and meeting all WSDOT requirements will be provided to Commonstreet from a licensed survey company.
No occupants or property will be displaced requiring relocation services and that no relocation services will be required.
The City will pay directly to provider all expenses for title commitments, recording fees, escrow services, and title insurance.

TASKS:

ROW Project Management

- Prepare for and lead monthly Right of Way Task Force Meetings;
- Prepare for and attend design development meetings as requested by the City or the project team;
- Respond to inquiries and needs identified by your team, the City and/or Project Stakeholders;
- Provide written and oral status updates on right of way activities;
- Provide oversight to all aspects of the right of way program;

DocuSign Envelope ID: E98D248F-A90B-4A99-AF58-388D454E7E2C

- Review City's approved Right of Way Procedures;
- Develop and execute the Right of Way program in compliance with state law, Uniform Act and WSDOT requirements;
- Oversight of preliminary ROW activities to comply with WSDOT requirements;
- Provide oversight of ROW activities to comply with WSDOT certification requirements;
- Maintain quality control/quality assurance protocols in the execution of the right of way tasks; and
- Coordinate ROW Cost Estimates and title reviews.

Title Searches and Review

- Create state and federal compliant project files for each parcel;
- Request the City order new and/or updates to existing title commitments;
- Review title reports for each parcel and identify each exception;
- Once a parcel's title interest has been reviewed, identify methods of clearance per City direction.

Deliverables:

- Up to 40 Title Review Summaries,
- Up to 40 clearance/exception reports for approval by City.

Appraisal and Appraisal Review Coordination

- Coordinating appraisal task and any subconsultants;
- Providing all documentation required to complete appraisal report review, supporting City's Determinations of Value, and
- Integrating findings into offer packages.

Deliverables:

- Up to 40 Appraisals;
- Up to 40 Review Appraisals;
- Determinations of Value/Just Compensation for approval by City.

Negotiations, Administrative Settlements, QA/QC

- Project file set-up, reviewing of all appraisal and compensation data;
- Preparing, delivering and presenting offer packages;
- Negotiating settlements, and drafting justification memos;
- QA/QC of all documents, tasks, and processes before, during, and after acquisition process;
- Clearing encroachments to comply with federal and state requirements; and
- Additionally, includes support preparing condemnation ordinance(s) when required.

Deliverables:

- Up to 40 offer packages;

DocuSign Envelope ID: E98D248F-A90B-4A99-AF58-388D454E7E2C

- Transmittal of executed acquisition documents where amicable settlements are approved by the City;
- Condemnation packages where proposed settlements are not approved by the City;
- Diaries (project correspondence log) for up to 40 negotiations.

WSDOT Certification and File Close Out

- Collaborate with City during certification process;
- Setting up client escrow account or facilitating execution of all conveyance documents, payment vouchers, proof of payment and closing data along with recorded conveyance documents and closing of files;
- Setting up closed files to provide to WSDOT LAC;
- Addressing any issues or concerns raised by Local Programs;
- Prepare parcel files (electronic and/or hard copy) in a format requested by the City.

Deliverables:

- Up to 40 parcel files for submission to WSDOT LAC for certification;
- Certification letters and submissions for WSDOT LAC.

Task 5 – 56th Avenue W – PS&E (Phase 2)

5.1 60% Submittal

The Consultant will update Existing plans based on comments received from the City, franchise utilities, and will incorporate available developer plans.

- Site Prep, Roadway, and Curb plans will be updated to standardize corner treatments, revise ADA ramps, eliminate curb bulbs where possible, revise corner radii for current design vehicles, adjust structure locations to behind the walk.
- Stormwater Design:
    - The Consultant will review available project background information including as-builts, critical areas, the 2022 project drainage report by KPG and associated project stormwater design, previous City comments, and GIS information.
    - The Consultant will delineate the project surface areas and update project requirements.
    - The selected project stormwater concept alternative will include up to two (2) on-site stormwater management (LID) facilities, one (1) water quality facility, and one (1) flow control facility.
    - The Consultant will prepare an updated Draft Drainage Report incorporating City comments and feedback since the previous project submittal, and per Ecology's 2019 Stormwater Management Manual for Western Washington (SWMWW). The Drainage Report will also include:
        - An Existing Conditions Exhibit showing minor and major hydrologic features, flood hazard areas, geologic hazard areas, aquifer and wellhead protection areas, and topographic information.
        - Updated Drainage Basin Map exhibit.

DocuSign Envelope ID: E98D248F-A90B-4A99-AF58-388D454E7E2C

    - Updated Flow Control Target Surfaces exhibit.
    - Updated Flow Control for TDAs exhibit.
    - Operations and Maintenance Manual (as applicable).
- Add a 16 inch water main between 236th Street SW and 230th Street SW
- Revise RRFB designs at 234th Street SW and 230th Street SW to full signal design, revise existing RRFB system at 58th Avenue W and 236th Street SW to a full signal system, upgrade signal at 56th Avenue W and 236th Street SW.
- Plans shall include pole footings, traffic signal poles with mast arms and streetlights, conduits, wiring, wiring terminations, pole schedules, junction boxes, controller cabinets and battery backup system, detection system, fiber optic interconnect and signal phasing, PTZ cameras, and all other associated equipment to provided complete signal system design.
- Redesign of the illumination system shall use requirements from the latest IES manual and requirement for 60-foot spacing requirement shall be omitted. AGi32 model shall be created and illumination design report shall be submitted. Coordination with the local power utility company and submitting electrical permit applications shall be done by the Consultant. Work shall include redesign of existing illumination system and plans shall include pole footings, poles and luminaires (per City standard details), conduits, wiring, junction boxes, service cabinets, and all other associated equipment to provided complete illumination system design.
- ITS fiber optic cabling shall be shown on illumination and signal plans only. Details will show one-line diagrams and splicing tables and no splicing diagrams shall be provided. Meeting with the City IT department shall be coordinated by the City project manager.
- .
- Provide structural design of walls and pole foundations.
- Revised private property frontage improvements.
- Revise landscaping, irrigation and urban design elements to align with sidewalk and illumination changes.
- Channelization and signing revisions.
    - Traffic control and detour plans will be prepared as part of 90% submittal.
- The Cost Estimate will be updated based on recent bid results and tracked inflation trends. For specialty items the Consultant will talk with vendors and suppliers to get accurate unit costs.
- QA/QC and constructability reviews will be performed by senior members of the design and construction services teams.

Assumptions:

- Updates will include elements required for federally funded project.
- The City will determine the available acreage the regional facility can accommodate to meet project flow control requirements. The Consultant can reconfirm contributing basin areas to the regional infiltration facility and compare the design land use with current land use changes, but will not model the regional facility.
- Only one (1) update to surface area tallies will be performed at the 60% design stage.

DocuSign Envelope ID: E98D248F-A90B-4A99-AF58-388D454E7E2C

- The condition of existing stormwater pipes proposed to remain in place in the project limits will be assessed by others. The recommendation to replace existing pipes due to their condition will be by others.
- High groundwater is not anticipated per previous project geotechnical reports. Stormwater facilities will not include buoyancy calculations or underdrain design, unless otherwise recommended by a geotechnical engineer.
- The project is not anticipated to require stormwater treatment as previous report area tallies indicate new pollution generating areas are less than 5,000 square feet. The water quality facility included in the design scope is for replacement of an impacted bioswale per previous project reports. The provided replacement treatment is anticipated to be revised from a StormFilter facility to BioPod, or equivalent, treatment facility. No additional treatment will be required as a result of Endangered Species Act consultation.
- The Draft Drainage Report will encompass the Project work scheduled in Phase 2, including the final design for 232nd Street SW and 234th Street SW. Phase 3 stormwater requirements will be documented as part of the Phase 3 work.
- Stormwater conveyance and inlet spread calculations will not be included in the 60% Draft Drainage Report. Only minimal conveyance calculations will be performed for the alternative analysis effort to determine conveyance routing feasibility. Inlet spread and sag analysis will not be performed at this design stage.
- On-site stormwater management facility feasibility will be evaluated at 60%, but not included in the plans or details until infiltration testing confirms infiltration feasibility. These details are anticipated to be added at the 90% design phase, if applicable.
- Equipment specifications and cut sheets for small cell 5G Design will be provided by small cell service providers.

Deliverables:

- Updated design and illumination reports
- 60% Draft Drainage Report PDF)
- 60% Plans (PDF format)
- 60% Opinion of Cost (PDF and Excel)
- Completed QA/QC Checklist

5.2 90% Submittal

- 60% plans and reports will be updated based on comments received from the City, franchise utilities, and property owners during ROW negotiations.
- Conveyance calculations will be performed and included in the Final Drainage Report.
- Sag calculations will be performed and included in the Final Drainage Report, as applicable. Inlet spread analysis will not be performed.
- A Draft Construction Stormwater Pollution Prevention Plan (SWPPP) will be prepared using Ecology's SWPPP template. Temporary Erosion Control and Sediment (TESC) measures will be included on the Site Preparation Plans.
- 90% specifications will be developed based on City and franchise utility comments, current applicable WSDOT and APWA GSPs, and new City boilerplate (if needed).

DocuSign Envelope ID: E98D248F-A90B-4A99-AF58-388D454E7E2C

- 60% cost estimate will be updated to address unit prices and minor quantity changes.
- A QA/QC review will be performed on the 90% plans, specifications, and estimate by senior staff members.

Assumptions:

- Only one (1) iteration of stormwater area tally updates will be performed.
- Significant updates to stormwater requirements and design in this phase will be communicated to the City during scheduled meetings or via written email communication. There will be no resubmittal of the drainage report at this design phase.
- The Draft SWPPP will not include any supporting calculations.

Deliverables:

- Updated design and illumination reports
- Draft SWPPP (PDF)
- 90% Plans (PDF format)
- 90% Opinion of Cost (PDF and Excel)
- 90% Specifications (Word format)
- Completed QA/QC Checklist

5.3 100% Submittal

- 90% plans and reports will be updated based on comments received from the City, franchise utilities, and property owners during ROW negotiations.
- 90% specifications will be updated based on City and franchise utility comments, current applicable WSDOT and APWA GSPs, and new City boilerplate (if needed).
- 90% cost estimate will be updated to address unit prices and minor quantity changes.
- A QA/QC review will be performed on the 100% plans, specifications, and estimate by senior staff members.

Assumptions:

- No significant changes to stormwater design will occur at this design stage.
- Only one (1) iteration of area tally updates will be performed.
- Resubmittal of the Final Drainage Report will not be necessary.

Deliverables:

- Updated design, illumination reports, Final Drainage Report (PDF format), Final SWPPP (PDF format)
- 100% Plans (PDF format)
- 100% Opinion of Cost (PDF and Excel)
- 100% Specifications (Word format)
- Completed QA/QC Checklist

DocuSign Envelope ID: E98D248F-A90B-4A99-AF58-388D454E7E2C

5.4 Bid Documents

- 100% plans will be updated based on comments received from the City, franchise utilities and property owners. Plans will be stamped and signed by licensed staff members.
- 100% specifications will be updated based on City and franchise utility comments, current applicable WSDOT and APWA GSPs, and new City boilerplate (if needed). Specifications will be stamped and signed by a licensed engineer.
- 100% cost estimate will be updated to address unit prices and minor quantity changes.
- A QA/QC review will be performed on the Bid Documents by senior staff members.

Deliverables:

- Updated design and illumination reports
- Signed Plans (PDF format)
- Final Opinion of Cost (PDF and Excel)
- Signed bid-ready Specifications (Word format)

Task 6 – Supplemental Survey and Basemapping

The Consultant shall perform survey pick-ups of changed conditions along 232nd Street SW and 234th Street SW prior to the 90% submittal. The basemap will be updated with the supplemental information.

CADD mapping work to prepare 1"=20' topographic basemap and digital terrain model (DTM) in AutoCAD format of the project within the limits described above. KPG Psomas mapping standards and Civil 3D version 2018 will be utilized in basemap preparation.

Deliverables:

- Updated basemapping in CAD format
- Legal descriptions and exhibits (PDF format)

Task 7 – 232nd Street SW and 234th Street SW PS&E (Phase 2)

7.1 60% Submittal

Existing plans will be updated based on comments received from the City, franchise utilities, and will incorporate available developer plans.

- Site Prep, Roadway, and Curb plans will be updated to standardize back of walk locations, where possible, include wider sidewalks on the north side of 234th Street SW, revised ADA ramps, elimination of curb bulbs where possible, revised corner radii for current design vehicles, revised undergrounding structure locations to behind the walk.
- The stormwater vault will be located on 234th St SW as previously designed, City will provide CAD files with vault in the preferred location of 234th St SW.
- Water main relocation to accommodate the detention tank.

DocuSign Envelope ID: E98D248F-A90B-4A99-AF58-388D454E7E2C

- Finalize the aerial utility undergrounding design.
- Redesign of the illumination system shall use requirements from the latest IES manual and requirement for 60-foot spacing requirement shall be omitted. AGi32 model shall be created and illumination design report shall be submitted. Coordination with the local power utility company and submitting electrical permit applications shall be done by the Consultant. Work shall include redesign of existing illumination system and plans shall include pole footings, poles, and luminaires (per City standard details), conduits, wiring, junction boxes, service cabinets, and all other associated equipment to provided complete illumination system design.
- Preparation of potholing plans and performing potholing activities.
- Provide structural design of walls and pole foundations.
- Revise private property frontage improvements.
- Revise landscaping, irrigation, and urban design elements to align with sidewalk and illumination changes.
- Channelization and signing revisions.
- Traffic control and detour plans will be prepared at 90% level.
- The Cost Estimate will be updated based on recent bid results and tracked inflation trends. For specialty items the Consultant will talk with vendors and suppliers to get accurate unit costs.
- QA/QC and constructability reviews will be performed by senior members of the design and construction services teams.

Assumptions:

- There will be no substantial changes to the vault design previously located at 234th St SW. The City will provide the CAD files and details for the submittal version with the vault location at 234th St SW.

Deliverables:

- Updated design and illumination reports
- 60% Plans (PDF format)
- 60% Opinion of Cost (PDF and Excel)
- Completed QA/QC Checklist

7.2 90% Submittal

- 60% plans will be updated based on comments received from the City, franchise utilities, and property owners during ROW negotiations.
- 90% specifications will be developed based on City and franchise utility comments, current applicable WSDOT and APWA GSPs, and new City boilerplate (if needed).
- 60% cost estimate will be updated to address unit prices and minor quantity changes.
- A QA/QC review will be performed on the 90% plans, specifications, and estimate by senior staff members.

Deliverables:

DocuSign Envelope ID: E98D248F-A90B-4A99-AF58-388D454E7E2C

- Updated design and illumination reports
- 90% Plans (PDF format)
- 90% Opinion of Cost (PDF and Excel)
- 90% Specifications (Word format)
- Completed QA/QC Checklist

7.3 100% Submittal

- 90% plans will be updated based on comments received from the City, franchise utilities, and property owners during ROW negotiations.
- 90% specifications will be updated based on City and franchise utility comments, current applicable WSDOT and APWA GSPs, and new City boilerplate (if needed).
- 90% cost estimate will be updated to address unit prices and minor quantity changes.
- A QA/QC review will be performed on the 100% plans, specifications, and estimate by senior staff members.

Deliverables:

- Updated design and illumination reports
- 100% Plans (PDF format)
- 100% Opinion of Cost (PDF and Excel)
- 100% Specifications (Word format)
- Completed QA/QC Checklist

7.4 Bid Documents

- 100% plans will be updated based on comments received from the City, franchise utilities, and property owners. Plans will be stamped and signed by licensed staff members.
- 100% specifications will be updated based on City and franchise utility comments, current applicable WSDOT and APWA GSPs, and new City boilerplate (if needed). Specifications will be stamped and signed by a licensed engineer.
- 100% cost estimate will be updated to address unit prices and minor quantity changes.
- A QA/QC review will be performed on the Bid Documents by senior staff members.

Deliverables:

- Updated design and illumination reports
- Signed Plans (PDF format)
- Final Opinion of Cost (PDF and Excel)
- Signed bid ready Specifications (Word format)

Task 8 – Right-of-Way 232nd/234th (Phase 2)

DocuSign Envelope ID: E98D248F-A90B-4A99-AF58-388D454E7E2C

8.1 Prepare Property Owner Exhibits

Property owner exhibits will be prepared to identify specific changes to property frontages, driveway and restoration limits, landscaping, undergrounding structure locations, fence relocations, and other private property improvements. It is assumed that 18 exhibits will be required.

8.2 Prepare Legal Descriptions and Exhibits

The Consultant shall prepare legal descriptions and exhibits for right-of-way and easement acquisitions. Work will be performed by a licensed surveyor. Documents will be stamped and signed. Assumes 18 parcels will require legal descriptions and exhibits.

8.3 Right-of Way Appraisal and Acquisition Services (Optional Service)

This work will include preparing a right of way funding estimate, conducting appraisals and review appraisals, property owner negotiations and acquisition documentation and WSDOT certification support. Assumes 18 parcels.

Deliverables:

- Property owner exhibits (PDF format)
- Legal descriptions and exhibits (PDF format)
- Project right-of-way funding estimate
- Appraisal and review appraisal documentation
- Offer letters and project correspondence log for ROW negotiations

Task 9 – Developer and Utility Coordination

9.1 Developer Coordination

The Consultant shall coordinate property frontage and utility improvements with developers along the 56th Avenue W, 230th Street SW, 232nd Street SW, and 234th Street SW corridors to ensure that improvements installed by developers match the City improvement tie in locations and elevations.

The Consultant will review developers plans, compare to the proposed project plans and mark up developer plans and provide the developer with the CADD files prepared for the City project.

9.2 Franchise Utility Coordination

The Consultant shall coordinate with franchise utility providers to ensure that proposed improvements avoid existing utilities where possible. Aerial utility undergrounding coordination meetings will be conducted to ensure that the franchise utility facility needs and design standards are being met. Meetings will be held before the 90% submittal and as needed to ensure that coordination issues are addressed prior to construction.

Assumptions:

- Joint Utility Trench and Vault locations will stay in the provided design location. Coordination will be to confirm the previous design and no relocation or resizing will be necessary.

DocuSign Envelope ID: E98D248F-A90B-4A99-AF58-388D454E7E2C

- Three different development review – two reviews for each development
- One utility meeting per submittal, four meetings total, each meeting two hours

Deliverables:

- Developer plans – reviewed with comments
- Utility coordination log and meeting minutes

Task 10 – Public Outreach

This task focuses on gathering information from the community and stakeholders to support development of a conceptual design of the 57th Avenue W pedestrian corridor that reflects the vision of the Town Center Subarea Plan and the community. The Consultant will work with the City and support a two-step outreach process that is accessible and encourages involvement from all members of the community.

10.1 Public Outreach Strategy

The Consultant will develop a public outreach strategy that identifies outreach goals, materials, methods of communication, targeted audiences, roles and responsibilities, and estimated timeline. The City will review and approve the strategy.

10.2 Step 1 – Information Gathering

For Step 1 of the public outreach, the Consultant will prepare outreach materials, develop the project website, and host an in-person visioning workshop. The project website will include a survey for those community members who are unable to attend the in-person workshop.

Outreach materials: Materials will include graphics for Facebook posts, flyers, and other methods of advertising the website and workshop. The Consultant will prepare displays for the visioning workshop.

Website: The Consultant will develop a project website to inform the community about the project, solicit community input, document project milestones, and solicit community feedback. The format for the website will be an ArcGIS Story Map, with a unique URL for public access. The website will contain graphics to help describe a pedestrian street and woonerf concepts and a map of the project area. The website will also include a survey to solicit the same type of feedback that will be gathered at the workshop. The website will go live after approval by the City.

Visioning Workshop: The Consultant, with support from the City, will host a public workshop for stakeholders and community members. The workshop will be open house style, with interactive displays intended to gather input from the community on what matters most to them in the new public space and how the community's character and diversity can be reflected in the conceptual design. Informational displays will contain information such as perspectives, aerial scroll plots and photos of similar project elements. Interactive displays will use stickers, sticky notes, or other methods to gather input from the community.

Step 1 Assumptions:

- The City will advertise the Story Map and workshop.

DocuSign Envelope ID: E98D248F-A90B-4A99-AF58-388D454E7E2C

- The City will secure the location for the workshop.
- The City will provide staff to support the workshop.
- Up to four Consultant staff members will attend the workshop.
- The Story Map will be built on the City's ArcGIS Online account, with a username provided to the Consultant.

Step 1 Deliverables:

- Graphic for Facebook post
- Flyer
- Website
- Survey
- Workshop displays

10.3 Step 2 – Selecting the Preferred Alternative

After the Consultant team develops the conceptual design alternatives, the alternatives will be presented to the public to gather input and support the City's selection of the preferred alternative.

Outreach Materials: The Consultant will update the outreach materials to reflect the second step of the process and notify the community of the updated website, survey, and dates of any planned in-person events.
Website: The website will be updated to display the conceptual design alternatives drawings and description. The Consultant will develop a second survey to solicit feedback on the alternatives.

In-Person Event: If an opportunity aligns with the project schedule, the Consultant will prepare for and host a pop-up event in the Town Center. For the best results, the pop-up will need to occur when a separate event is planned that is already bringing community members to the Town Center. The pop-up will occur either on site of the proposed new street or nearby. The pop-up site will incorporate some temporary design features, such as benches, landscaping, or outside dining areas, as well as displays showing the proposed concept alternatives. The intent will be to give community members a feel for the street and also be given an opportunity to select their preferred alternative.

If a pop-up event is not feasible, the Consultant and City staff will identify other opportunities to reach the community and solicit input on the preferred alternative.

Step 2 Assumptions:

- The City will support the Consultant in securing a location for an in-person event or for identifying alternative outreach opportunities.
- The City will advertise the updated website and event.
- The City will support the Consultant in determining what resources are available to use as temporary design in the pop-up event.
- The City will provide labor and equipment, as necessary, to support set up of the pop-up event.
- The City will provide staff to attend the in-person event.
- Up to four Consultant staff members will attend the in-person event.

DocuSign Envelope ID: E98D248F-A90B-4A99-AF58-388D454E7E2C

Step 2 Deliverables:

- Updated website
- New Survey
- Pop-up design plan
- Displays of the conceptual design alternatives (developed in a separate task)
- Outreach materials

Task 11 – 57th Avenue W Conceptual Design (Phase 3)

The Consultant shall identify and evaluate, through a public process, concept design alternatives for the 57th Avenue W corridor between 232nd Street SW and 236th Street SW, with the section between 232nd Street SW and 236th Street SW as a pedestrian priority street (woonerf or shared street design). The Consultant shall build on the work completed during the 57th Avenue W concept public outreach (Task 10) to establish the ROW centerline and limits, evaluate the proposed cross sections and develop a conceptual level roadway layout and an urban design package. Upon selection of the preferred concept design alternative, the Consultant will develop preliminary (10% level) plans and reports for the 57th Avenue W corridor between 232nd Street SW and 236th Street SW. On 57th Avenue W between 230th Street SW and 232nd Street SW, there is existing ROW with a two-lane travel way and parking and sidewalk/pedestrians pathway on the east side of the roadway. No right-of-way exists currently for the segment of 57th Avenue W between 232nd Street SW and 236th Street SW; however, the City has identified the preferred location of the 57th Avenue W ROW. The Consultant shall also develop a funding level cost estimate. Work to be included in the development of the 57th Avenue W preliminary concept design alternatives includes:

11.1 Survey, Basemapping, and ROW Establishment

Establish horizontal and vertical control points along the corridor for field topographic survey. Basis of control will be NAD 83/2011 for horizontal, and NAVD 88 for vertical. Control points will be established and will be made available for use during design/construction. The Consultant will locate, field survey, and calculate positions for monuments and control points throughout the project limits, using the Washington State plane coordinate system. Conventional or GPS surveying methods will be used on this project.

Field survey within the project limits:

- Field survey of planimetric features, including not limited to road crown, edge of the pavement, existing curb and gutter, sidewalk, traffic striping/channelization, fire hydrants, water meters, existing walls, mailboxes, fences, trees, vegetation, utilities, buildings, structures and ROW centerline (where it exists). Topographic mapping of the existing ground will be taken at approximately at 25-ft intervals (to 2-ft. contour intervals).

Survey limits for the work element are:

- 57th Avenue W between 232nd Street SW and 236th Street SW – survey between the ROW limits developed during the design charette and 20 ft on either side.
- Total length of 57th Avenue W survey – approximately 2,000 lineal feet.
- Included in this work element are location of walls, surface features (valves, manholes, catch basins, junction boxes, vaults, etc.). Irrigation systems will not be included. Perform observation and measure-

DocuSign Envelope ID: E98D248F-A90B-4A99-AF58-388D454E7E2C

downs of existing storm drain catch basins and manholes and sewer manholes. The approximate size, type (brick, concrete), and general condition of the structures to confirm suitability for continued use, and the approximate size and location of pipes will be documented. These observations will be made from the surface.

The Consultant shall coordinate utility locates. Consultant shall subcontract with a utility locating company to paint conductible underground utility locations within the complete survey sections. Utility records collected by the locating company will be provided for our use. While every reasonable effort will be made by KPG Psomas to depict the location of underground utilities based on utility locates, KPG Psomas is not liable for errors or omissions by utility locators or erroneous or insufficient information shown on utility record drawings.

CADD mapping work to prepare 1"=20' topographic base map and digital terrain model (DTM) in AutoCAD format of the project within the limits described above. KPG Psomas mapping standards and Civil 3D version 2022 will be utilized in base map preparation.

Research Records. Determine which existing corners and monuments should be field located and surveyed. Calculations for ROW centerline alignment and ROW lines. Using the research information and the survey work described above, calculate location and surveyed corners, roadway features and monuments. The ROW centerline and margins will be defined geometrically using Washington State plane coordinates and stationing will be assigned to the alignment.

New ROW lines and centerline will be established between 232nd Street SW and 236th Street SW.

Deliverables:

- Electronic copies of the completed basemap and ROW maps will be delivered to the City.

11.2 Transportation Analysis Review

The Consultant will evaluate intersection and corridor improvements to develop recommendations for safety and mobility concerns. Intersection and corridor criteria for evaluation is expected to be based on

Assumptions:

- No modelling will be provided under this task.

Deliverables:

- Corridor Evaluation Memo

11.3 Alternatives Design Concepts

The Consultant will develop and evaluate up to three (3) concept design alternatives, developed during the workshops for 57th Avenue W within the established ROW which will include a two-block segment of a pedestrian priority street. Alternatives will establish preliminary dimensions and limits for travel lanes, parking lanes, planters, sidewalks, utility needs and other pedestrian amenities identified. The concepts will be shared with the community in workshop setting, identified in Task 10.2

DocuSign Envelope ID: E98D248F-A90B-4A99-AF58-388D454E7E2C

This task will also include the following urban design elements, including development of urban design and landscape vision and opportunities, integration of urban design into baseline ROW improvements, analysis of future land use, and connectivity with active transportation network, transit, and key destinations.

The Consultant will prepare a draft Alternatives Technical Memorandum (approximately 20 pages, excluding exhibits) detailing the process of the selection and development, as well as the advantages and disadvantages, of each of the alternatives, including right-of-way impacts, drainage options, connectivity opportunities, impacts to the public, and long-term/short-term viability. The Consultant will work with the City to make and document a recommendation as to which alternative will meet the City's goals and serve the City's needs.

Assumptions:

- Up to three (3) concept design alternatives consisting of sections and intersection views will be evaluated in the Draft Alternatives Technical Memo.
- A planning level opinion of cost will be developed for each concept design alternative and will be included as part of the Draft Alternatives Technical Memo.
- The Consultant will attend one (1) review meeting to discuss the Draft Alternatives Technical Memo and address the City's questions and comments.

Deliverables:

- Draft Alternatives Technical Memo for review by the City (PDF Format)

11.4 Alternatives Presentations and Preferred Alternative Selection

The Consultant will prepare materials for and attend one (1) meeting to present the alternatives and recommendations to the City. One round of revisions will be made, and then the materials will be shared with the public for evaluation and selection.

The Consultant will then meet with the city again to determine select the preferred alternative based on public input and the evaluation in Task 11.3.

Assumptions:

- The presentations will be at the City offices, and the City will facilitate the presentations. All presentations are assumed to be virtual.
- In-person presentations can be done as an optional service.

Deliverables:

- Materials required for the presentations, assumed to be roll plots, cross-sections and graphics, with one round of review
- Final Alternatives Technical Memo (PDF Format), incorporating revisions to the Draft Alternatives Technical Memo

11.5 Preliminary Stormwater Analysis (Osborn)

DocuSign Envelope ID: E98D248F-A90B-4A99-AF58-388D454E7E2C

The Consultant will evaluate the preferred design alternative to determine preliminary project stormwater requirements. The stormwater design will be based on the Draft 2024 SWMWW, 2024 SWMWW, or current SWMWW version per coordination with the City. The design will show mainline stormwater conveyance routing and stormwater facility type and areas as applicable in a CADD base map for incorporation into project scroll plots and exhibits by others.

The Preliminary Stormwater Memorandum will include:

- A project vicinity map
- A drainage basin map
- A summary of minimum requirement applicability
- A table summary of stormwater surface areas

The Consultant shall also prepare an preliminary funding level stormwater cost estimate for the 57th Avenue W corridor improvements, to be included in the project-level estimate submitted in a separate task.

Assumptions:

- Concept-level BMP modeling will be performed to evaluate feasibility of a new regional stormwater treatment and detention facility in the 57th Ave W project corridor.

The Consultant will confirm the design manual version with the City for this corridor prior to beginning work on this task

Deliverables:

- Preliminary Stormwater Memorandum (PDF)

11.6 Preliminary Illumination Analysis (Concord and Perteet)

The Consultant will evaluate the preferred design alternative to determine preliminary luminaire spacing requirements and determination of locations for 5G poles. The Consultant shall use decorative pedestrian and roadway illumination pole designs from Phase 2. The Consultant shall coordinate with telecom providers for locations for 5g poles along the proposed corridor.

Assumptions:

- The Consultant shall use decorative pedestrian and roadway illumination pole designs from Phase 2.
- 5G Design will include: Coordination with small cell providers/carriers to determine their equipment requirements and specifications and discuss technical issues for wiring and equipment attachments. Provide design for and CAD drawings for carrier specified equipment concealed within the poles, provide design and CAD drawings for optional equipment concealment in alternate structures (e.g. trash receptacles). Identify conduit system for future installation (if required), provide modified pole foundation design (larger bolt circle), and coordinate with the City production of standard details

Deliverables:

- AGi32 layout

11.7 Urban Design Report (Toole)

DocuSign Envelope ID: E98D248F-A90B-4A99-AF58-388D454E7E2C

The Consultant shall prepare an Urban Design Report for the 57th Avenue W corridor. This report will include development of preliminary concepts for landscaping and urban design elements that will give the corridor the desired placemaking and urban corridor feel.

The Urban Design Report will include the following illustrations:

- Illustrative Roadway Section
- Roadway Photo Simulation (1)
- Urban Design Palette – Benches, Bollards, Trash Receptacles, Bike Racks
- Intersection Diagram with Decorative Surface Features
- Plant and Tree Palette
- Planter Fencing and Tree Grates

Deliverables:

- Draft and Final Urban Design Report (PDF format)

Assumptions:

- Assumes development of landscaping and urban design elements identified during the design charette

11.8 Right-of-Way Acquisition (Preliminary Real Estate Estimate)

The Consultant shall prepare a Preliminary Real Estate Cost Estimate for the purpose of right-of-way budgeting.

Following the review of the 10% Design right-of-way plan, EPIC land solutions will prepare a Preliminary Real Estate Cost Estimate based on impacted parcels as indicated in the 10% Design. The worksheets will include property information, zoning, acquisition type, assessed value, and estimated market land value. Additionally, the worksheets will include all potential costs to cure, and other acquisitions negotiation related to costs. The purpose of this report will be to capture potential real estate costs for budgeting purposes only. (For additional scope details see EPIC Land Solutions scope and fee breakdown.)

Assumptions:

- The purpose of this estimate will be to capture potential real estate costs and associated administrative fees for project cost estimating.

Deliverables:

- PDF and Excel of the Real Estate Cost Estimate

11.9 Permit Matrix (Perteet)

The Consultant shall develop a permit matrix for the 57th Avenue W project. The matrix will assume involvement of federal funds from WSDOT/FHWA which triggers the requirement for the project to comply with the National Environmental Policy Act (NEPA), with FHWA as the federal lead entity.

The Consultant will research and list the anticipated NEPA permit requirements and provide an estimated timeline for permit approvals. Expected permit elements include: a biological assessment (required if the project

DocuSign Envelope ID: E98D248F-A90B-4A99-AF58-388D454E7E2C

creates pollution generating surfaces), noise and air pollution impacts, environmental justice, hazardous materials, and a cultural resources review.

Assumptions:

- Permit documentation preparation is not included under this task.

Deliverables:

- Permit Matrix (Excel Version)

Task 12 – Preliminary (10%) Design Report and Cost Estimate (Phase 3)

The Consultant shall prepare a preliminary design report that identifies the codes, regulations and design guidance used to develop the preferred option to the 10% level. The report will include pertinent information from the various design disciplines that will outline project elements and constraints.

The Consultant shall also prepare and preliminary funding level cost estimate for the 57th Avenue W corridor improvements.

Deliverables:

- Preliminary Design Report (PDF format)
- 10% scroll plot of preferred alternative (ACAD DWG files and PDF format)

Task 13 – Grant Funding Support

The Consultant will support the City to apply for grant funding for design, right-of-way and construction costs. Grant support could include preparing grant applications, preparation of graphics and cost estimate and participating in presentations to selection committees. Potential grant programs appropriate for this project include RAISE grant, PSRC Regionwide, PSRC Transportation Alternatives Program, TIB.

Assumptions:

- Grant support will be limited to the hours and budget assigned to Task 12.

Task 14 – Bid Support Services

The Consultant will provide the following services during the bidding period:

- The Consultant staff will attend one (1) project-related "Pre-Bid" meeting lasting one (1) hour with City staff and potential bidders if scheduled by the City.
- The Consultant will respond to Mountlake Terrace questions concerning the PS&E that may be generated by potential bidders. The Consultant will not respond to questions directly from potential bidders.
- The Consultant will prepare documents as needed to respond to bidder inquiries and to support the issuance of addenda.
- The Consultant will prepare conformed plans incorporating addenda.

DocuSign Envelope ID: E98D248F-A90B-4A99-AF58-388D454E7E2C

Deliverables:

- Conformed plans

OPTIONAL ADDITIONAL SERVICES

The City may require additional services of the Consultant. The scope of these services will be determined based on the unanticipated project needs or other considerations at the sole discretion of the City. This work may include items identified in the current WE authorizations as well other items, which may include, but are not necessarily limited to the following:

- Providing Additional Public Outreach
- Providing in-person outreach presentations
- Providing design for sewer replacement or relining on Main Street Phase 2
- Providing Right of Way for 232nd St SW and 234th St SW for Phase 2
- Providing Geotechnical Services
- Providing permitting services for Phase 2
- Providing Final Design and Right-of-Way Services for Phase 3
- Providing Construction Engineering Support Services
- Providing Construction Administration Services

These services will be authorized under a future contract supplement if necessary. At the time these services are required, the Consultant shall provide a detailed scope of work and an estimate of costs. The Consultant shall not proceed with the work until the City has authorized the work and issued a notice to proceed.

DocuSign Envelope ID: E98D248F-A90B-4A99-AF58-388D454E7E2C

Exhibit B
DBE Participation Plan

Concord Engineering, Inc. and Osborn Consulting, Inc qualify as DBE and WBE.

See attached Exhibit B.

DocuSign Envelope ID: E98D248F-A90B-4A99-AF58-388D454E7E2C

EXHIBIT B

Firm	Role	SBE	Anticipated % of Work
Perteet	Prime	No	40%
Osborn Consulting, Inc.	Storm Drainage	Yes (DBE, WBE)	15%
Commonstreet	Right of Way	No	21%
Concord Engineering, Inc.	Traffic Signal, Illumination, and ITS	Yes (DBE,MWBE)	12%
Toole Design	Urban Design	No	6%
KPG Psomas	Survey and Basemapping	No	6%

DocuSign Envelope ID: E98D248F-A90B-4A99-AF58-388D454E7E2C

Exhibit C
Preparation and Delivery of Electronic Engineering and Other Data

In this Exhibit the agency, as applicable, is to provide a description of the format and standards the consultant is to use in preparing electronic files for transmission to the agency. The format and standards to be provided may include, but are not limited to, the following:

I. Surveying, Roadway Design & Plans Preparation Section

A. Survey Data

Survey prepared by KPG Psomas using AutoCAD 2018 compatible file format

B. Roadway Design Files

Prepared following Mountlake Terrace, WSDOT, Department of Ecology

C. Computer Aided Drafting Files

Prepared using AutoCAD. Files to be submitted in AutoCAD 2018 file format.

D. Specify the Agency's Right to Review Product with the Consultant

Agency will review and provide comments at the 60%, 90%, and 100% submittals. Agency will provide comments in an excel format supplemented with PDF markups.

E. Specify the Electronic Deliverables to Be Provided to the Agency

Refer to attached scope of services.

F. Specify What Agency Furnished Services and Information Is to Be Provided

Refer to attached scope of services.

II. Any Other Electronic Files to Be Provided

Refer to attached scope of services.

III. Methods to Electronically Exchange Data

Consultant shall submit via Consultant's SharePoint Site

DocuSign Envelope ID: E98D248F-A90B-4A99-AF58-388D454E7E2C

A. Agency Software Suite

Office/AutoCAD/Bluebeam

B. Electronic Messaging System

Email

C. File Transfers Format

SharePoint

DocuSign Envelope ID: E98D248F-A90B-4A99-AF58-388D454E7E2C

Exhibit D
Prime Consultant Cost Computations

See attached Exhibit D - Detailed Fee Computations and Indirect Cost Rate (ICR)

PERTEET

EXHIBIT D

Project	**Main St Revitalization Phase 2, 56th Ave W**	**Contract Start Date**	**2/5/2024**	**Last Update date**	**1/25/2024**
Client	**City of Mountlake Terrace**	**Contract End Date**	**1/30/2026**	**Perteet Project No.**	**20230184.0000**
PM	**Rory Cameron**	**Contract Duration:**	**23 Months**		

Task / Billing Rate	Principal	Director	Sr. Associate	Sr. Engineer / Mgr	Sr. Engineer / Mgr	Sr. Engineer / Mgr	Engineer III	Civil Designer II	Civil Designer II	Civil Designer II	Civil Designer II	Civil Designer II	Civil Designer II	Lead Technician/ Designer	Sr Planner/Cultural Resources Manager	Planner III	Planner I	Accountant	Mkt Proposal Mgr	Total Hours	Labor Dollars
	$413.35	**$296.17**	**$270.67**	**$245.19**	**$213.35**	**$240.41**	**$165.58**	**$130.68**	**$130.56**	**$140.94**	**$124.19**	**$140.11**	**$130.68**	**$197.43**	**$180.61**	**$162.21**	**$93.62**	**$174.60**	**$143.29**		
Task 1 - Project Management and Coordination																					
General Project Management	30.00			50.00																80.00	$24,660.00
Project Schedule, Budget and Team Management	24.00			120.00														12.00		156.00	$41,439.00
Progress Reporting and Invoice				24.00														24.00		48.00	$10,075.00
Total Task 1 - Project Management and Coordination	**54.00**	**0.00**	**0.00**	**194.00**	**0.00**	**0.00**	**0.00**	**0.00**	**0.00**	**0.00**	**0.00**	**0.00**	**0.00**	**0.00**	**0.00**	**0.00**	**0.00**	**36.00**	**0.00**	**284.00**	**$76,174.00**
Task 2 - Review Available Info				2.00	8.00		8.00	8.00	8.00	8.00	8.00	8.00		8.00						66.00	$10,433.00
Total Task 2 - Review Available Info	**0.00**	**0.00**	**0.00**	**2.00**	**8.00**	**0.00**	**8.00**	**8.00**	**8.00**	**8.00**	**8.00**	**8.00**	**0.00**	**8.00**	**0.00**	**0.00**	**0.00**	**0.00**	**0.00**	**66.00**	**$10,433.00**
Task 3 - Supplemental Survey and Basemapping (56th - Phase 2)				4.00	12.00															16.00	$3,541.00
Total Task 3 - Supplemental Survey and Basemapping (56th - Phase 2)	**0.00**	**0.00**	**0.00**	**4.00**	**12.00**	**0.00**	**0.00**	**0.00**	**0.00**	**0.00**	**0.00**	**0.00**	**0.00**	**0.00**	**0.00**	**0.00**	**0.00**	**0.00**	**0.00**	**16.00**	**$3,541.00**
Task 4 - R/W (56th - Phase 2)				24.00	24.00															48.00	$11,005.00
Total Task 4 - R/W (56th - Phase 2)	**0.00**	**0.00**	**0.00**	**24.00**	**24.00**	**0.00**	**0.00**	**0.00**	**0.00**	**0.00**	**0.00**	**0.00**	**0.00**	**0.00**	**0.00**	**0.00**	**0.00**	**0.00**	**0.00**	**48.00**	**$11,005.00**
Task 5 - 56th Ave W - PS&E (Phase 2)																					
60% PS&E		16.00	32.00	32.00	64.00	16.00	64.00	64.00	128.00	64.00	128.00	128.00	128.00	128.00						992.00	$159,267.00
90% PS&E		16.00	16.00	32.00	64.00	16.00	64.00	64.00	128.00	64.00	128.00	128.00	128.00	128.00						976.00	$154,937.00
100% PS&E		12.00	12.00	24.00	48.00	12.00	48.00	48.00	96.00	48.00	96.00	96.00	96.00	96.00						732.00	$116,203.00
Bid Ready PS&E		6.00	12.00	12.00	24.00	6.00	24.00	24.00	48.00	24.00	48.00	48.00	48.00	48.00						372.00	$59,725.00
Total Task 5 - 56th Ave W - PS&E (Phase 2)	**0.00**	**50.00**	**72.00**	**100.00**	**200.00**	**50.00**	**200.00**	**200.00**	**400.00**	**200.00**	**400.00**	**400.00**	**400.00**	**400.00**	**0.00**	**0.00**	**0.00**	**0.00**	**0.00**	**3,072.00**	**$490,132.00**
Task 6 - Survey and Basemapping - 232nd/234th (Phase 2)																					
Total Task 6 - Survey and Basemapping - 232nd/234th (Phase 2)	**0.00**	**0.00**	**0.00**	**0.00**	**0.00**	**0.00**	**0.00**	**0.00**	**0.00**	**0.00**	**0.00**	**0.00**	**0.00**	**0.00**	**0.00**	**0.00**	**0.00**	**0.00**	**0.00**	**0.00**	**$0.00**
Task 7 - PS&E 232nd/234th (Phase 2)																					
60% PS&E		6.00		12.00	24.00	6.00	24.00	24.00	48.00	24.00	48.00	48.00	48.00	48.00						360.00	$56,477.00
90% PS&E		6.00		12.00	24.00	6.00	24.00	24.00	48.00	24.00	48.00	48.00	48.00	48.00						360.00	$56,477.00
100% PS&E		4.00		8.00	16.00	4.00	16.00	16.00	32.00	16.00	32.00	32.00	32.00	32.00						240.00	$37,652.00
Bid Ready PS&E		4.00		8.00	16.00	4.00	16.00	16.00	32.00	16.00	32.00	32.00	32.00	32.00						240.00	$37,652.00
Total Task 7 - PS&E 232nd/234th (Phase 2)	**0.00**	**20.00**	**0.00**	**40.00**	**80.00**	**20.00**	**80.00**	**80.00**	**160.00**	**80.00**	**160.00**	**160.00**	**160.00**	**160.00**	**0.00**	**0.00**	**0.00**	**0.00**	**0.00**	**1,200.00**	**$188,258.00**
Task 8 - R/W 232nd/234th (Phase 2)				96.00																96.00	$23,538.00
Total Task 8 - R/W 232nd/234th (Phase 2)	**0.00**	**0.00**	**0.00**	**96.00**	**0.00**	**0.00**	**0.00**	**0.00**	**0.00**	**0.00**	**0.00**	**0.00**	**0.00**	**0.00**	**0.00**	**0.00**	**0.00**	**0.00**	**0.00**	**96.00**	**$23,538.00**
Task 9 - Developer and utility coordination																					
Developer coordination		24.00		6.00	24.00	24.00														78.00	$19,470.00
Utlity coordination		16.00		8.00	16.00	24.00														64.00	$15,884.00
Total Task 9 - Developer and utility coordination	**0.00**	**40.00**	**0.00**	**14.00**	**40.00**	**48.00**	**0.00**	**0.00**	**0.00**	**0.00**	**0.00**	**0.00**	**0.00**	**0.00**	**0.00**	**0.00**	**0.00**	**0.00**	**0.00**	**142.00**	**$35,353.00**
Task 10 - Public Outreach																					
Public Outreach Strategy				5.00											5.00					10.00	$2,129.00
Step 1-Information Gathering				26.00											40.00	4.00	20.00		4.00	94.00	$16,694.00

Task / Billing Rate	Principal	Director	Sr. Associate	Sr. Engineer / Mgr	Sr. Engineer / Mgr	Sr. Engineer / Mgr	Engineer III	Civil Designer II	Civil Designer II	Civil Designer II	Civil Designer II	Civil Designer II	Civil Designer II	Lead Technician/ Designer	Sr Planner/Cultural Resources Manager	Planner III	Planner I	Accountant	Mkt Proposal Mgr	Total Hours	Labor Dollars
	$413.35	$296.17	$270.67	$245.19	$213.35	$240.41	$165.58	$130.68	$130.56	$140.94	$124.19	$140.11	$130.68	$197.43	$180.61	$162.21	$93.62	$174.60	$143.29		
Step 2-Selecting the Preferred Alternative				24.00	24.00										36.00		12.00		2.00	98.00	$18,917.00
Total Task 10 - Public Outreach	**0.00**	**0.00**	**0.00**	**55.00**	**24.00**	**0.00**	**0.00**	**0.00**	**0.00**	**0.00**	**0.00**	**0.00**	**0.00**	**0.00**	**81.00**	**4.00**	**32.00**	**0.00**	**6.00**	**202.00**	**$37,740.00**
Task 11 - 57th Conceptual Design (Phase 3)																					
Survey, Basemapping and ROW Establishment				8.00																8.00	$1,962.00
Transportation Analysis				12.00	40.00							80.00								132.00	$22,685.00
Cross Section Alternatives				8.00	24.00							40.00								72.00	$12,686.00
Preliminary Surface Water Analysis				4.00	16.00															20.00	$4,394.00
Preliminary Illumination				4.00																4.00	$981.00
Urban Design Report				4.00	8.00															12.00	$2,688.00
Preliminary R/W Estimate				8.00	16.00							40.00								64.00	$10,979.00
Permit Matrix			12.00	4.00												24.00				40.00	$8,122.00
Total Task 11 - 57th Conceptual Design (Phase 3)	**0.00**	**0.00**	**12.00**	**52.00**	**104.00**	**0.00**	**0.00**	**0.00**	**0.00**	**0.00**	**0.00**	**160.00**	**0.00**	**0.00**	**0.00**	**24.00**	**0.00**	**0.00**	**0.00**	**352.00**	**$64,497.00**
Task 12 - Preliminary (10%) Design Report and Cost Estimate (Phase 3)		12.00		24.00	48.00	12.00	48.00	48.00	96.00	48.00	96.00	96.00	96.00	96.00						720.00	$112,955.00
Total Task 12 - Preliminary (10%) Design Report and Cost Estimate (Phase 3)	**0.00**	**12.00**	**0.00**	**24.00**	**48.00**	**12.00**	**48.00**	**48.00**	**96.00**	**48.00**	**96.00**	**96.00**	**96.00**	**96.00**	**0.00**	**0.00**	**0.00**	**0.00**	**0.00**	**720.00**	**$112,955.00**
Task 13 - Grant Funding Support				4.00	16.00										16.00					36.00	$7,284.00
Total Task 13 - Grant Funding Support	**0.00**	**0.00**	**0.00**	**4.00**	**16.00**	**0.00**	**0.00**	**0.00**	**0.00**	**0.00**	**0.00**	**0.00**	**0.00**	**0.00**	**16.00**	**0.00**	**0.00**	**0.00**	**0.00**	**36.00**	**$7,284.00**
Task 14 - Bid Support Services			2.00	6.00	12.00		6.00	6.00						8.00						40.00	$7,930.00
Total Task 14 - Bid Support Services	**0.00**	**0.00**	**2.00**	**6.00**	**12.00**	**0.00**	**6.00**	**6.00**	**0.00**	**0.00**	**0.00**	**0.00**	**0.00**	**8.00**	**0.00**	**0.00**	**0.00**	**0.00**	**0.00**	**40.00**	**$7,930.00**
Total Hours	**54.00**	**122.00**	**86.00**	**615.00**	**568.00**	**130.00**	**342.00**	**342.00**	**664.00**	**336.00**	**664.00**	**824.00**	**656.00**	**672.00**	**97.00**	**28.00**	**32.00**	**36.00**	**6.00**	**6,274.00**	
Total Dollars	**$22,321.00**	**$36,133.00**	**$23,277.00**	**$150,793.00**	**$121,182.00**	**$31,254.00**	**$56,630.00**	**$44,694.00**	**$86,689.00**	**$47,355.00**	**$82,461.00**	**$115,450.00**	**$85,728.00**	**$132,671.00**	**$17,520.00**	**$4,542.00**	**$2,996.00**	**$6,285.00**	**$860.00**		**$1,068,840.00**

Expenses:	
Mileage - $.67	319
Printing	1,500
Totals:	**1,819**

Subconsultant Fees:	**Cost**	**Markup**	**Bill**
Commonstreet Consulting, LLC	569,834		569,834
Concord Engineering, Inc.	311,442		311,442
KPG, P.S.	152,360		152,360
Osborn Consulting, Inc.	408,017		408,017
Toole Design Group, LLC	170,738		170,738
Totals:	**1,612,391**		**1,612,391**

SUMMARY	
Labor	**$1,068,840.00**
Expenses	**$1,819.00**
Subconsultants	**$1,612,391.00**
CONTRACT TOTAL	**$2,683,050.00**

DocuSign Envelope ID: E98D248F-A90B-4A99-AF58-388D454E7E2C

EXHIBIT D-1

Perteet, Inc.
2707 Colby Avenue, Suite 900
Everett, WA 98201
Negotiated Hourly Rate Sheet
City of Mountlake Terrace Main St. Revitalization Phase 2, 56th Avenue W.

Job Classification	Direct Labor (DL)	Overhead: 188.43%	Fixed Fee: 30% Fixed Fee % (Fee x DL)	All Inclusive Hourly Billing
Principal	129.81	244.60	38.94	413.35
Director	118.84	223.93	35.65	378.42
Sr. Associate	90.00	169.59	27.00	286.59
Sr. Engineer/Manager	79.00	148.86	23.70	251.56
Lead Engineer/Manager	60.10	113.25	18.03	191.38
Engineer III	52.00	97.98	15.60	165.58
Civil Designer II*	46.50	87.62	13.95	148.07
Civil Designer I*	38.50	72.55	11.55	122.60
Lead Tech/Designer	62.00	116.83	18.60	197.43
Technician III	41.50	78.20	12.45	132.15
Technician I	26.00	48.99	7.80	82.79
Sr. Construction Technician	54.00	101.75	16.20	171.95
Construction Technician I	34.62	65.23	10.39	110.24
Construction Observer II	41.00	77.26	12.30	130.56
Construction Observer I	39.00	73.49	11.70	124.19
Sr. Construction Observer	43.00	81.02	12.90	136.92
Construction Specialist II	46.00	86.68	13.80	146.48
Construction Supervisor	85.01	160.18	25.50	270.70
Sr. Construction Manager	72.00	135.67	21.60	229.27
Sr. Planner	56.72	106.88	17.02	180.61
Sr. Ecologist	63.21	119.11	18.96	201.28
Lead Environmental Scientist	54.60	102.88	16.38	173.86
Planner III	50.94	95.99	15.28	162.21
Planner II	38.00	71.60	11.40	121.00
Planner I	29.40	55.40	8.82	93.62
Cultural Resources Specialist II	41.57	78.33	12.47	132.37
Cultural Resources Specialist I	31.50	59.36	9.45	100.31
Controller	68.25	128.60	20.48	217.33
Accountant	54.83	103.32	16.45	174.60
Clerical	35.55	66.99	10.67	113.20

*Note: Classification Title Changes - In order to specifically adhere to the experience requirements in RCW 18.43.040 relating to engineering registration, we are revising the following classifications titles:
Engineer I and II - now Civil Designer I and II

Note: Invoiced DL may be less than the maximum rate shown per job classification but will not exceed the maximum rate. Rates are subject to renegotiation upon the one year anniversary of contract execution.

DocuSign Envelope ID: E98D248F-A90B-4A99-AF58-388D454E7E2C

Exhibit E
Sub-consultant Cost Computations

If no sub-consultant participation listed at this time. The CONSULTANT shall not sub-contract for the performance of any work under this AGREEMENT without prior written permission of the AGENCY. Refer to section VI "Sub-Contracting" of this AGREEMENT.

See attached Exhibit E fee calculations and Indirect Cost Rate (ICR)

DocuSign Envelope ID: E98D248F-A90B-4A99-AF58-388D454E7E2C

EXHIBIT E - CONCORD ENGINEERING

Subconsultant Fee Determination Summary Sheet

Subconsultant: Concord Engineering
Project: Main Street Reconstruction Project – Phases 2 and 3
Client: City of Mountlake Terrace

All INCLUSIVE RATES

Classification	Hours		Rate		Cost
Principal Engineer and QC Reviewer (Senior Engineer 7)	142	x $	251.11	=	$35,658
Senior Engineer 6	476	x $	233.88	=	$111,327
Senior Engineer 2	512	x $	187.10	=	$95,797
Assistant Engineer 5	560	x $	118.17	=	$66,176
Admin (Project Coordinator 3)	24	x $	92.32	=	$2,216
Title		x		=	$0
Title		x		=	$0
Title		x		=	$0
Title		x		=	$0
Title		x		=	$0
Title		x		=	$0
Title		x		=	$0
	Direct Salary Costs			**=**	**$311,174**
	TOTAL DIRECT SALARY X OH AND FF			**=**	**$311,174**

REIMBURSABLES

Mileage		$	268.00
Xerox Copies			$0
	TOTAL REIMBURSABLE COST =	**$**	**268.00**

CONTRACT TOTAL	=	**$311,442**

Prepared By : *Date:* *January 25, 2024*

https://perteet.sharepoint.com/sites/ActiveProjects/20230184Mountlake_TerraceMainSt_Ph2Internal/Project Management/Scope and Fee/Toole/[Copy of Subconsultant_MLT Main St Revitalization Rate Table_1-23-2024_Toole.xls]S

DocuSign Envelope ID: E98D248F-A90B-4A99-AF58-388D454E7E2C

Exhibit E-1 - Concord Engineering

Prime: Perteet, Inc.
Subconsultant: Concord Engineering
Negotiated Hourly Rate Sheet
City of Mountlake Terrace Main St. Reconstruction Project - Phase 2 and 3

		Overhead: 116.19%	Fixed Fee: 30%	
Job Classification	Direct Labor (DL)		Fixed Fee % (Fee x DL)	All Inclusive Hourly Billing
Senior Engineer 8	$108.00	$125.49	$32.40	$265.89
Senior Engineer 7	$102.00	$118.51	$30.60	$251.11
Senior Engineer 6	$95.00	$110.38	$28.50	$233.88
Senior Engineer 5	$90.00	$104.57	$27.00	$221.57
Senior Engineer 4	$85.00	$98.76	$25.50	$209.26
Senior Engineer 3	$80.00	$92.95	$24.00	$196.95
Senior Engineer 2	$76.00	$88.30	$22.80	$187.10
Senior Engineer 1	$72.00	$83.66	$21.60	$177.26
Associate Engineer 6	$64.00	$74.36	$19.20	$157.56
Associate Engineer 5	$62.00	$72.04	$18.60	$152.64
Associate Engineer 4	$60.00	$69.71	$18.00	$147.71
Associate Engineer 3	$58.00	$67.39	$17.40	$142.79
Associate Engineer 2	$54.00	$62.74	$16.20	$132.94
Associate Engineer 1	$50.00	$58.10	$15.00	$123.10
Assistant Engineer 5	$48.00	$55.77	$14.40	$118.17
Assistant Engineer 4	$46.00	$53.45	$13.80	$113.25
Assistant Engineer 3	$44.00	$51.12	$13.20	$108.32
Assistant Engineer 2	$42.00	$48.80	$12.60	$103.40
Assistant Engineer 1	$40.00	$46.48	$12.00	$98.48
Project Accountant 3	$37.50	$43.57	$11.25	$92.32
Project Coordinator 3	$37.50	$43.57	$11.25	$92.32

Note: Invoiced DL may be less than the maximum rate shown per job classification but will not exceed the maximum rate. Rates are subject to renegotiation upon the one year anniversary of contract execution.

DocuSign Envelope ID: E98D248F-A90B-4A99-AF58-388D454E7E2C

EXHIBIT E - Commonstreet Consulting, LLC

Subconsultant Fee Determination Summary Sheet

Subconsultant: Commonstreet Consulting, LLC
Project: Main Street Reconstruction Project – Phases 2 and 3
Client: City of Mountlake Terrace

NEGOTIATED HOURLY RATES

Classification	Hours		Rate		Cost
Principal/Senior Advisor	130	x	$279.53	=	$36,339
Senior Project Manager	183	x	$206.85	=	$37,854
Project Manager	200	x	$179.47	=	$35,894
Senior Right of Way Agent	928	x	$169.85	=	$157,621
Right of Way Agent	1085	x	$102.87	=	$111,614
Senior Project Control Specialist	198	x	$139.77	=	$27,674
Project Control Specialist	125	x	$106.22	=	$13,278
Title		x		=	$0
Title		x		=	$0
Title		x		=	$0
Title		x		=	$0
Title		x		=	$0
	Negotiated Salary Costs			**=**	**$420,273**

REIMBURSABLES

Appraisal and Appraisal Review	$147,300
Mileage, Copies, Printing, Mailing, and Deliveries	$2,261
TOTAL REIMBURSABLE COST =	**$ 149,561.00**

CONTRACT TOTAL	=	**$569,834**

Prepared By: Theodore R Parry, JD *Date: January 24, 2024*

https://perteet.sharepoint.com/sites/ActiveProjects/20230184Mountlake_TerraceMainSt_Ph2Internal/Project Management/Scope and Fee/Toole/[Copy of Subconsultant_MLT Mai

DocuSign Envelope ID: E98D248F-A90B-4A99-AF58-388D454E7E2C

Exhibit E-1 - COMMONSTREET

Prime: Perteet, Inc.
Subconsultant: Commonstreet Consulting, LLC
Negotiated Hourly Rate Sheet
City of Mountlake Terrace Main Street Reconstruction Project – Phases 2 and 3

		Overhead: 102.57%	Fixed Fee: 30%	
Job Classification	Direct Labor (DL)		Fixed Fee % (Fee x DL)	All Inclusive Hourly Billing
Principal/Senior Advisor/Program Manager	120.19	123.28	36.06	279.53
Senior Project Manager	88.94	91.23	26.68	206.85
Project Manager / Property Manager	77.17	79.15	23.15	179.47
Senior Right of Way Agent	73.03	74.91	21.91	169.85
Right of Way Agent	44.23	45.37	13.27	102.87
Sr Project Control Specialist/Sr ROW Technician	60.10	61.64	18.03	139.77
Project Control Specialist/ROW Technician	45.67	46.85	13.70	106.22
		0.00	0.00	0.00
		0.00	0.00	0.00
		0.00	0.00	0.00

Note: Invoiced DL may be less than the maximum rate shown per job classification but will not exceed the maximum rate.
Rates are subject to renegotiation upon the one year anniversary of contract execution.

DocuSign Envelope ID: E98D248F-A90B-4A99-AF58-388D454E7E2C

EXHIBIT E - KPG Psomas

Subconsultant Fee Determination Summary Sheet

Subconsultant: KPG Psomas
Project: Main Street Reconstruction Project – Phases 2 and 3
Client: City of Mountlake Terrace

NEGOTIATED HOURLY RATES

Classification	Hours		Rate		Cost
Senior Project Manager Survey	38	x	$250.00	=	$9,500
Survey Crew I (w/Equip)		x	$212.00	=	$0
Survey Crew II (w/Equip)	100	x	$270.00	=	$27,000
Field Surveyor I		x	$103.00	=	$0
Field Surveyor II		x	$134.00	=	$0
Field Surveyor III		x	$151.00	=	$0
Project Surveyor I		x	$154.00	=	$0
Project Surveyor II	344	x	$172.00	=	$59,168
Surveyor I	40	x	$94.00	=	$3,760
Surveyor II		x	$128.00	=	$0
Surveyor III	324	x	$143.00	=	$46,332
Office Admin	10	x	$110.00	=	$1,100
	Negotiated Hourly Costs			**=**	**$146,860**

REIMBURSABLES

Mileage	$500
Task 6 Utility Locator Allowance	$5,000
TOTAL REIMBURSABLE COST =	**$ 5,500.00**

CONTRACT TOTAL	=	**$152,360**

Prepared By: Mike Bowen *Date: January 25, 2024*

https://perteet.sharepoint.com/sites/ActiveProjects/20230184Mountlake_TerraceMainSt_Ph2Internal/Project Management/Scope and Fee/Toole/[Copy of Subconsultant_MLT Main St

DocuSign Envelope ID: E98D248F-A90B-4A99-AF58-388D454E7E2C

Exhibit E-1 - KPG Psomas

Prime: Perteet, Inc.
Subconsultant: KPG Psomas
Negotiated Hourly Rate Sheet
City of Mountlake Terrace Main St. Reconstruction Project - Phase 2 and 3

Job Classification	Direct Labor (DL)	Overhead: 171.93%	Fixed Fee: 30% Fixed Fee % (Fee x DL)	(Rounded to $1) All Inclusive Hourly Billing
Senior Project Manager Survey	82.73	142.24	24.82	250.00
Survey Crew I (w/Equip)	70.25	120.78	21.08	212.00
Survey Crew II (w/Equip)	89.50	153.88	26.85	270.00
Field Surveyor I	34.00	58.46	10.20	103.00
Field Surveyor II	44.50	76.51	13.35	134.00
Field Surveyor III	50.00	85.97	15.00	151.00
Project Surveyor I	51.00	87.68	15.30	154.00
Project Surveyor II	57.00	98.00	17.10	172.00
Surveyor I	31.00	53.30	9.30	94.00
Surveyor II	42.50	73.07	12.75	128.00
Surveyor III	47.50	81.67	14.25	143.00
Office Assistant	36.50	62.75	10.95	110.00

Note: Invoiced DL may be less than the maximum rate shown per job classification but will not exceed the maximum rate.
Rates are subject to renegotiation upon the one year anniversary of contract execution.

DocuSign Envelope ID: E98D248F-A90B-4A99-AF58-388D454E7E2C

EXHIBIT E - Osborn Consulting

Subconsultant Fee Determination Summary Sheet

Subconsultant: Osborn Consulting
Project: Main Street Reconstruction Project – Phases 2 and 3
Client: City of Mountlake Terrace

DIRECT SALARY RATES

Classification	Hours		Rate		Cost
Principal	22	x	$275.13	=	$6,053
Senior QC	266	x	$240.01	=	$63,843
Senior Project Manager	0	x	$216.59	=	$0
Senior Engineer	661	x	$196.39	=	$129,814
Project Engineer	510	x	$167.54	=	$85,445
Design Engineer	0	x	$150.33	=	$0
Engineer I	420	x	$112.69	=	$47,328
Engineering Technician II	0	x	$102.44	=	$0
CADD Manager	61	x	$175.61	=	$10,712
Senior CADD Designer	354	x	$143.07	=	$50,646
CADD Tech	0	x	$109.76	=	$0
Graphic Design	0	x	$163.91	=	$0
Senior Administration	39	x	$177.28	=	$6,914
Technical Editor	54	x	$131.71	=	$7,112
Administration	0	x	$117.08	=	$0
TOTAL LABOR COST (NEGOTIATED BILLING RATES)				**=**	**$407,867**

REIMBURSABLES

Mileage	$150
Xerox Copies	$0
TOTAL REIMBURSABLE COST =	**$ 150.00**

CONTRACT TOTAL	=	**$408,017**

Prepared By : Janina Glovatchi *Date:* *January 25, 2024*

https://perteet.sharepoint.com/sites/ActiveProjects/20230184Mountlake_TerraceMainSt_Ph2Internal/Project Management/Scope and Fee/Toole/[Copy of Subconsultant_MLT Main St R

DocuSign Envelope ID: E98D248F-A90B-4A99-AF58-388D454E7E2C

Exhibit E-1 - Osborn Consulting, Inc.

Prime: Perteet, Inc.
Subconsultant: Osborn Consulting, Inc.
Negotiated Hourly Rate Sheet
City of Mountlake Terrace Main St. Reconstruction Project - Phase 2 and 3

		Overhead: 162.76%	Fixed Fee: 30%	
Job Classification	Direct Labor (DL)		Fixed Fee % (Fee x DL)	All Inclusive Hourly Billing
Principal	94.00	152.99	28.20	275.19
Senior QC	82.00	133.46	24.60	240.06
Senior Project Manager	74.00	120.44	22.20	216.64
Senior Engineer	67.10	109.21	20.13	196.44
Project Engineer	57.24	93.16	17.17	167.58
Design Engineer	51.36	83.59	15.41	150.36
Engineer I	38.50	62.66	11.55	112.71
Engineering Technician II	35.00	56.97	10.50	102.47
CADD Manager	60.00	97.66	18.00	175.66
Senior CADD Designer	48.88	79.56	14.66	143.10
CADD Tech	37.50	61.04	11.25	109.79
Graphic Design	56.00	91.15	16.80	163.95
Senior Administration	60.57	98.58	18.17	177.32
Technical Editor	45.00	73.24	13.50	131.74
Administration	40.00	65.10	12.00	117.10

Note: Invoiced DL may be less than the maximum rate shown per job classification but will not exceed the maximum rate. Rates are subject to renegotiation upon the one year anniversary of contract execution.

DocuSign Envelope ID: E98D248F-A90B-4A99-AF58-388D454E7E2C

EXHIBIT E -Toole Design

Subconsultant Fee Determination Summary Sheet

Subconsultant: Toole Design

Project: Main Street Reconstruction Project – Phases 2 and 3

Client: City of Mountlake Terrace/Perteet

NEGOTIATED HOURLY RATES

Classification	Hours		Rate		Cost
Engineering Lead II	90	x	$224.99	=	$20,249
Senior Planner	355	x	$166.55	=	$59,125
Senior Landscape Architect	270	x	$151.94	=	$41,024
Project Engineer	20	x	$151.94	=	$3,039
Engineer II	325	x	$125.65	=	$40,836
Landscape Architecture Lead	32	x	$195.77	=	$6,265
Engineer I		x	$111.04	=	$0
Title		x		=	$0
Title		x		=	$0
Title		x		=	$0
Title		x		=	$0
Title		x		=	$0
	Negotiated Hourly Costs			**=**	**$170,538**

REIMBURSABLES

Mileage	$200
Xerox Copies	$0
TOTAL REIMBURSABLE COST =	**$ 200.00**

CONTRACT TOTAL	=	**$170,738**

Prepared By : *Date: January 25, 2024*

https://perteet.sharepoint.com/sites/ActiveProjects/20230184Mountlake_TerraceMainSt_Ph2Internal/Project Management/Scope and Fee/Toole/[Copy of Subconsultant_MLT Main St Revitalization F

DocuSign Envelope ID: E98D248F-A90B-4A99-AF58-388D454E7E2C

Exhibit E-1 - Toole Design

Prime: Perteet, Inc.
Subconsultant: Toole Design
Negotiated Hourly Rate Sheet
City of Mountlake Terrace Main St. Reconstruction Project - Phase 2 and 3

		Overhead: 162.20%	Fixed Fee: 30%	
Job Classification	Direct Labor (DL)		Fixed Fee % (Fee x DL)	All Inclusive Hourly Billing
Engineering Lead II	77.00	124.89	23.10	224.99
Senior Planner	57.00	92.45	17.10	166.55
Senior Landscape Architect	52.00	84.34	15.60	151.94
Project Engineer	52.00	84.34	15.60	151.94
Engineer II	43.00	69.75	12.90	125.65
Landscape Architecture Lead	67.00	108.67	20.10	195.77
Engineer 1	38.00	61.64	11.40	111.04
Classification		0.00	0.00	0.00
Classification		0.00	0.00	0.00
Classification		0.00	0.00	0.00

Note: Invoiced DL may be less than the maximum rate shown per job classification but will not exceed the maximum rate. Rates are subject to renegotiation upon the one year anniversary of contract execution.

Exhibit F - Title VI Assurances Appendix A & E

APPENDIX A

During the performance of this contract, the contractor, for itself, its assignees, and successors in interest (hereinafter referred to as the "contractor") agrees as follows:

1. **Compliance with Regulations:** The contractor (hereinafter includes consultants) will comply with the Acts and the Regulations relative to Non-discrimination in Federally-assisted programs of the U.S. Department of Transportation, ***(Federal Highway Administration)***, as they may be amended from time to time, which are herein incorporated by reference and made a part of this contract.

2. **Non-discrimination:** The contractor, with regard to the work performed by it during the contract, will not discriminate on the grounds of race, color, or national origin in the selection and retention of subcontractors, including procurements of materials and leases of equipment. The contractor will not participate directly or indirectly in the discrimination prohibited by the Acts and the Regulations, including employment practices when the contract covers any activity, project, or program set forth in Appendix B of 49 CFR Part 21. ***[Include Washington State Department of Transportation specific program requirements.]***

3. **Solicitations for Subcontracts, Including Procurements of Materials and Equipment:** In all solicitations, either by competitive bidding, or negotiation made by the contractor for work to be performed under a subcontract, including procurements of materials, or leases of equipment, each potential subcontractor or supplier will be notified by the contractor of the contractor's obligations under this contract and the Acts and the Regulations relative to Non-discrimination on the grounds of race, color, or national origin. ***[Include Washington State Department of Transportation specific program requirements.]***

4. **Information and Reports:** The contractor will provide all information and reports required by the Acts, the Regulations, and directives issued pursuant thereto and will permit access to its books, records, accounts, other sources of information, and its facilities as may be determined by the Recipient or the ***(Federal Highway Administration)*** to be pertinent to ascertain compliance with such Acts, Regulations, and instructions. Where any information required of a contractor is in the exclusive possession of another who fails or refuses to furnish the information, the contractor will so certify to the Recipient or the ***(Federal Highway Administration)***, as appropriate, and will set forth what efforts it has made to obtain the information.

5. **Sanctions for Noncompliance:** In the event of a contractor's noncompliance with the Non- discrimination provisions of this contract, the Recipient will impose such contract sanctions as it or the ***(Federal Highway Administration)*** may determine to be appropriate, including, but not limited to:

    a. withholding payments to the contractor under the contract until the contractor complies; and/or
    b. cancelling, terminating, or suspending a contract, in whole or in part.

6. **Incorporation of Provisions:** The contractor will include the provisions of paragraphs one through six in every subcontract, including procurements of materials and leases of equipment, unless exempt by the Acts, the Regulations and directives issued pursuant thereto. The contractor will take action with respect to any subcontract or procurement as the Recipient or the ***(Federal Highway Administration)*** may direct as a means of enforcing such provisions including sanctions for noncompliance. Provided, that if the contractor becomes involved in, or is threatened with litigation by a subcontractor, or supplier because of such direction, the contractor may request the Recipient to enter into any litigation to protect the interests of the Recipient. In addition, the contractor may request the United States to enter into the litigation to protect the interests of the United States.

Exhibit F - Title VI Assurances Appendix A & E

APPENDIX E

During the performance of this contract, the contractor, for itself, its assignees, and successors in interest (hereinafter referred to as the "contractor") agrees to comply with the following non-discrimination statutes and authorities; including but not limited to:

Pertinent Non-Discrimination Authorities:

- Title VI of the Civil Rights Act of 1964 (42 U.S.C. § 2000d et seq., 78 stat. 252), (prohibits discrimination on the basis of race, color, national origin); and 49 CFR Part 21.
- The Uniform Relocation Assistance and Real Property Acquisition Policies Act of 1970, (42 U.S.C. § 4601), (prohibits unfair treatment of persons displaced or whose property has been acquired because of Federal or Federal-aid programs and projects);
- Federal-Aid Highway Act of 1973, (23 U.S.C. § 324 et seq.), (prohibits discrimination on the basis of sex);
- Section 504 of the Rehabilitation Act of 1973, (29 U.S.C. § 794 et seq.), as amended, (prohibits discrimination on the basis of disability); and 49 CFR Part 27;
- The Age Discrimination Act of 1975, as amended, (42 U.S.C. § 6101 et seq.), (prohibits discrimination on the basis of age);
- Airport and Airway Improvement Act of 1982, (49 USC § 471, Section 47123), as amended, (prohibits discrimination based on race, creed, color, national origin, or sex);
- The Civil Rights Restoration Act of 1987, (PL 100-209), (Broadened the scope, coverage and applicability of Title VI of the Civil Rights Act of 1964, The Age Discrimination Act of 1975 and Section 504 of the Rehabilitation Act of 1973, by expanding the definition of the terms "programs or activities" to include all of the programs or activities of the Federal-aid recipients, sub-recipients and contractors, whether such programs or activities are Federally funded or not);
- Titles II and III of the Americans with Disabilities Act, which prohibit discrimination on the basis of disability in the operation of public entities, public and private transportation systems, places of public accommodation, and certain testing entities (42 U.S.C. §§ 12131-12189) as implemented by Department of Transportation regulations at 49 C.F.R. parts 37 and 38;
- The Federal Aviation Administration's Non-discrimination statute (49 U.S.C. § 47123) (prohibits discrimination on the basis of race, color, national origin, and sex);
- Executive Order 12898, Federal Actions to Address Environmental Justice in Minority Populations and Low-Income Populations, which ensures discrimination against minority populations by discouraging programs, policies, and activities with disproportionately high and adverse human health or environmental effects on minority and low-income populations;
- Executive Order 13166, Improving Access to Services for Persons with Limited English Proficiency, and resulting agency guidance, national origin discrimination includes discrimination because of limited English proficiency (LEP). To ensure compliance with Title VI, you must take reasonable steps to ensure that LEP persons have meaningful access to your programs (70 Fed. Reg. at 74087 to 74100);
- Title IX of the Education Amendments of 1972, as amended, which prohibits you from discriminating because of sex in education programs or activities (20 U.S.C. 1681 et seq).

DocuSign Envelope ID: E98D248F-A90B-4A99-AF58-388D454E7E2C

Exhibit G-1(a) Certification of Consultant

Exhibit G-1(b) Certification of City of Mountlake Terrace

Exhibit G-2 Certification Regarding Debarment, Suspension and Other Responsibility Matters - Primary Covered Transactions

Exhibit G-3 Certification Regarding the Restrictions of the Use of Federal Funds for Lobbying

Exhibit G-4 Certificate of Current Cost or Pricing Data

Exhibit G-1(a) Certification of Consultant

I hereby certify that I am the and duly authorized representative of the firm of

Perteet, Inc.

whose address is

2707 Colby Avenue, Suite 900, Everett, WA 98201

and that neither the above firm nor I have

a) Employed or retained for a commission, percentage, brokerage, contingent fee, or other consideration, any firm or person (other than a bona fide employee working solely for me or the above CONSULTANT) to solicit or secure this AGREEMENT;

b) Agreed, as an express or implied condition for obtaining this contract, to employ or retain the services of any firm or person in connection with carrying out this AGREEMENT; or

c) Paid, or agreed to pay, to any firm, organization or person (other than a bona fide employee working solely for me or the above CONSULTANT) any fee, contribution, donation, or consideration of any kind for, or in connection with, procuring or carrying out this AGREEMENT; except as hereby expressly stated (if any);

I acknowledge that this certificate is to be furnished to the City of Mountlake Terrace

and the Federal Highway Administration, U.S. Department of Transportation in connection with this AGREEMENT involving participation of Federal-aid highway funds, and is subject to applicable State and Federal laws, both criminal and civil.

Perteet, Inc.

Consultant (Firm Name)

Jesse A Thomsen

Signature (Authorized Official of Consultant)

2/5/2024

Date

Exhibit G-1(b) Certification of City of Mountlake Terrace

I hereby certify that I am the:

☒ Agency Official

☐ Other

of the Local Agency of Mountlake Terrace, and Perteet, Inc

or its representative has not been required, directly or indirectly as an express or implied condition in connection with obtaining or carrying out this AGREEMENT to:

a) Employ or retain, or agree to employ to retain, any firm or person; o

b) Pay, or agree to pay, to any firm, person, or organization, any fee, contribution, donation, or consideration of any kind; except as hereby expressly stated (if any):

I acknowledge that this certificate is to be furnished to the Washington State Department of Transportation

and the Federal Highway Administration, U.S. Department of Transportation, in connection with this AGREEMENT involving participation of Federal-aid highway funds, and is subject to applicable State and Federal laws, both criminal and civil.

Signature

February 2, 2024
Date

Exhibit G-2 Certification Regarding Debarment Suspension and Other Responsibility Matters - Primary Covered Transactions

I. The prospective primary participant certifies to the best of its knowledge and belief, that it and its principals:

A. Are not presently debarred, suspended, proposed for debarment, declared ineligible, or voluntarily excluded from covered transactions by any Federal department or agency;

B. Have not within a three (3) year period preceding this proposal been convicted of or had a civil judgment rendered against them for commission of fraud or a criminal offense in connection with obtaining, attempting to obtain, or performing a public (Federal, State, or local) transaction or contract under a public transaction; violation of Federal or State anti-trust statues or commission of embezzlement, theft, forgery, bribery, falsification or destruction of records, making false statements, or receiving stolen property;

C. Are not presently indicted for or otherwise criminally or civilly charged by a governmental entity (Federal, State, or local) with commission of any of the offenses enumerated in paragraph (1)(b) of this certification; an

D. Have not within a three (3) year period preceding this application / proposal had one or more public transactions (Federal, State and local) terminated for cause or default.

II. Where the prospective primary participant is unable to certify to any of the statements in this certification such prospective participant shall attach an explanation to this proposal.

Perteet, Inc.

Consultant (Firm Name)

Jesse A Thomsen

Signature (Authorized Official of Consultant)

2/5/2024

Date

Exhibit G-3 Certification Regarding the Restrictions of the Use of Federal Funds for Lobbying

The prospective participant certifies, by signing and submitting this bid or proposal, to the best of his or her knowledge and belief, that:

1. No Federal appropriated funds have been paid or will be paid, by or on behalf of the undersigned, to any person for influencing or attempting to influence an officer or employee of any Federal agency, a Member of Congress, an officer or employee of Congress, or any employee of a Member of Congress in connection with the awarding of any Federal contract, the making of any Federal grant, the making of any Federal loan, the entering into of any cooperative AGREEMENT, and the extension, continuation, renewal, amendment, or modification of Federal contract, grant, loan or cooperative AGREEMENT.
2. If any funds other than Federal appropriated funds have been paid or will be paid to any person for influencing or attempting to influence an officer or employee of any Federal agency, a Member of Congress, an officer or employee of Congress, or an employee of a Member of Congress in connection with this Federal contract, grant, loan or cooperative AGREEMENT, the undersigned shall complete and submit Standard Form - LLL, "Disclosure Form to Report Lobbying," in accordance with its instructions.

   This certification is a material representation of fact upon which reliance was placed when this transaction was made or entered into. Submission of this certification is a prerequisite for making or entering into this transaction imposed by Section 1352, Title 31, U.S. Code. Any person who fails to file the require certification shall be subject to a civil penalty of not less than $10,000.00, and not more than $100,000.00 for each such failure.

   The prospective participant also agrees by submitting his or her bid or proposal that he or she shall require that the language of this certification be included in all lower tier sub-contracts, which exceed $100,000 and that all such sub-recipients shall certify and disclose accordingly.

Perteet, Inc.

Consultant (Firm Name)

Jesse A Thomsen

Signature (Authorized Official of Consultant)

2/5/2024

Date

Exhibit G-4 Certification of Current Cost or Pricing Data

This is to certify that, to the best of my knowledge and belief, the cost or pricing data (as defined in section of the Federal Acquisition Regulation (FAR) and required under FAR subsection 15.403-4) submitted, either actually or by specific identification in writing, to the Contracting Officer or to the Contracting Officer's representative in support of Main Street Phase 2A & 2B* are accurate, complete, and current as of January 25, 2024**.

This certification includes the cost or pricing data supporting any advance AGREEMENT's and forward pricing rate AGREEMENT's between the offer or and the Government that are part of the proposal.

Firm: Perteet, Inc.

Jesse A Thomsen — Signature

Vice President — Title

Date of Execution 2/5/2024***:

*Identify the proposal, quotation, request for pricing adjustment, or other submission involved, giving the appropriate identifying number (e.g. project title.)
**Insert the day, month, and year, when price negotiations were concluded and price AGREEMENT was reached.
***Insert the day, month, and year, of signing, which should be as close as practicable to the date when the price negotiations were concluded and the contract price was agreed to.

DocuSign Envelope ID: E98D248F-A90B-4A99-AF58-388D454E7E2C

NOT USED/N/A

Exhibit H
Liability Insurance Increase

To Be Used Only If Insurance Requirements Are Increased

The professional liability limit of the CONSULTANT to the AGENCY identified in Section XII, Legal Relations and Insurance of this Agreement is amended to $ _____ .

The CONSULTANT shall provide Professional Liability insurance with minimum per occurrence limits in the amount of $ _____.

Such insurance coverage shall be evidenced by one of the following methods:

- Certificate of Insurance
- Self-insurance through an irrevocable Letter of Credit from a qualified financial institution

Self-insurance through documentation of a separate fund established exclusively for the payment of professional liability claims, including claim amounts already reserved against the fund, safeguards established for payment from the fund, a copy of the latest annual financial statements, and disclosure of the investment portfolio for those funds.

Should the minimum Professional Liability insurance limit required by the AGENCY as specified above exceed $1 million per occurrence or the value of the contract, whichever is greater, then justification shall be submitted to the Federal Highway Administration (FHWA) for approval to increase the minimum insurance limit.

If FHWA approval is obtained, the AGENCY may, at its own cost, reimburse the CONSULTANT for the additional professional liability insurance required.

Notes: Cost of added insurance requirements: $ _____.

- Include all costs, fee increase, premiums.
- This cost shall not be billed against an FHWA funded project.
- For final contracts, include this exhibit

DocuSign Envelope ID: E98D248F-A90B-4A99-AF58-388D454E7E2C

Exhibit I
Alleged Consultant Design Error Procedures

The purpose of this exhibit is to establish a procedure to determine if a consultant has alleged design error is of a nature that exceeds the accepted standard of care. In addition, it will establish a uniform method for the resolution and/or cost recovery procedures in those instances where the agency believes it has suffered some material damage due to the alleged error by the consultant.

Step 1 Potential Consultant Design Error(s) is Identified by Agency's Project Manager

At the first indication of potential consultant design error(s), the first step in the process is for the Agency's project manager to notify the Director of Public Works or Agency Engineer regarding the potential design error(s). For federally funded projects, the Region Local Programs Engineer should be informed and involved in these procedures. (Note: The Director of Public Works or Agency Engineer may appoint an agency staff person other than the project manager, who has not been as directly involved in the project, to be responsible for the remaining steps in these procedures.)

Step 2 Project Manager Documents the Alleged Consultant Design Error(s)

After discussion of the alleged design error(s) and the magnitude of the alleged error(s), and with the Director of Public Works or Agency Engineer's concurrence, the project manager obtains more detailed documentation than is normally required on the project. Examples include all decisions and descriptions of work, photographs, records of labor, materials, and equipment.

Step 3 Contact the Consultant Regarding the Alleged Design Error(s)

If it is determined that there is a need to proceed further, the next step in the process is for the project manager to contact the consultant regarding the alleged design error(s) and the magnitude of the alleged error(s). The project manager and other appropriate agency staff should represent the agency and the consultant should be represented by their project manager and any personnel (including sub-consultants) deemed appropriate for the alleged design error(s) issue.

Step 4 Attempt to Resolve Alleged Design Error with Consultant

After the meeting(s) with the consultant have been completed regarding the consultant's alleged design error(s), there are three possible scenarios:

- It is determined via mutual agreement that there is not a consultant design error(s). If this is the case, then the process will not proceed beyond this point.
- It is determined via mutual agreement that a consultant design error(s) occurred. If this is the case, then the Director of Public Works or Agency Engineer, or their representatives, negotiate a settlement with the consultant. The settlement would be paid to the agency or the amount would be reduced from the consultant's agreement with the agency for the services on the project in which the design error took place. The agency is to provide LP, through the Region Local Programs Engineer, a summary of the settlement for review and to make adjustments, if any, as to how the settlement affects federal reimbursements. No further action is required.
- There is not a mutual agreement regarding the alleged consultant design error(s). The consultant may request that the alleged design error(s) issue be forwarded to the Director of Public Works or Agency Engineer for review. If the Director of Public Works or Agency Engineer, after review with their legal counsel, is not able to reach mutual agreement with the consultant, proceed to Step 5.

Step 5 Forward Documents to Local Programs

For federally funded projects, all available information, including costs, should be forwarded through the Region Local Programs Engineer to LP for their review and consultation with the FHWA. LP will meet with representatives of the agency and the consultant to review the alleged design error(s), and attempt to find a resolution to the issue. If necessary, LP will request assistance from the Attorney General's Office for legal interpretation. LP will also identify how the alleged error(s) affects eligibility of project costs for federal reimbursement.

- If mutual agreement is reached, the agency and consultant adjust the scope of work and costs to reflect the agreed upon resolution. LP, in consultation with FHWA, will identify the amount of federal participation in the agreed upon resolution of the issue.
- If mutual agreement is not reached, the agency and consultant may seek settlement by arbitration or by litigation.

Exhibit J
Consultant Claim Procedures

The purpose of this exhibit is to describe a procedure regarding claim(s) on a consultant agreement. The following procedures should only be utilized on consultant claims greater than $1,000. If the consultant's claim(s) total a $1,000 or less, it would not be cost effective to proceed through the outlined steps. It is suggested that the Director of Public Works or Agency Engineer negotiate a fair and reasonable price for the consultant's claim(s) that total $1,000 or less.

This exhibit will outline the procedures to be followed by the consultant and the agency to consider a potential claim by the consultant.

Step 1 Consultant Files a Claim with the Agency Project Manager

If the consultant determines that they were requested to perform additional services that were outside of the agreement's scope of work, they may be entitled to a claim. The first step that must be completed is the request for consideration of the claim to the Agency's project manager.

The consultant's claim must outline the following:

- Summation of hours by classification for each firm that is included in the claim
- Any correspondence that directed the consultant to perform the additional work;
- Timeframe of the additional work that was outside of the project scope;
- Summary of direct labor dollars, overhead costs, profit and reimbursable costs associated with the additional work; and
- Explanation as to why the consultant believes the additional work was outside of the agreement scope of work.

Step 2 Review by Agency Personnel Regarding the Consultant's Claim for Additional Compensation

After the consultant has completed step 1, the next step in the process is to forward the request to the Agency's project manager. The project manager will review the consultant's claim and will met with the Director of Public Works or Agency Engineer to determine if the Agency agrees with the claim. If the FHWA is participating in the project's funding, forward a copy of the consultant's claim and the Agency's recommendation for federal participation in the claim to the WSDOT Local Programs through the Region Local Programs Engineer. If the claim is not eligible for federal participation, payment will need to be from agency funds.

If the Agency project manager, Director of Public Works or Agency Engineer, WSDOT Local Programs (if applicable), and FHWA (if applicable) agree with the consultant's claim, send a request memo, including backup documentation to the consultant to either supplement the agreement, or create a new agreement for the claim. After the request has been approved, the Agency shall write the supplement and/or new agreement and pay the consultant the amount of the claim. Inform the consultant that the final payment for the agreement is subject to audit. No further action in needed regarding the claim procedures.

If the Agency does not agree with the consultant's claim, proceed to step 3 of the procedures.

Step 3 Preparation of Support Documentation Regarding Consultant's Claim(s)

If the Agency does not agree with the consultant's claim, the project manager shall prepare a summary for the Director of Public Works or Agency Engineer that included the following:

- Copy of information supplied by the consultant regarding the claim;
- Agency's summation of hours by classification for each firm that should be included in the claim
- Any correspondence that directed the consultant to perform the additional work;
- Agency's summary of direct labor dollars, overhead costs, profit and reimbursable costs associate with the additional work;
- Explanation regarding those areas in which the Agency does/does not agree with the consultant's claim(s);
- Explanation to describe what has been instituted to preclude future consultant claim(s); and
- Recommendations to resolve the claim.

Step 4 Director of Public Works or Agency Engineer Reviews Consultant Claim and Agency Documentation

The Director of Public Works or Agency Engineer shall review and administratively approve or disapprove the claim, or portions thereof, which may include getting Agency Council or Commission approval (as appropriate to agency dispute resolution procedures). If the project involves federal participation, obtain concurrence from WSDOT Local Programs and FHWA regarding final settlement of the claim. If the claim is not eligible for federal participation, payment will need to be from agency funds.

Step 5 Informing Consultant of Decision Regarding the Claim

The Director of Public Works or Agency Engineer shall notify (in writing) the consultant of their final decision regarding the consultant's claim(s). Include the final dollar amount of the accepted claim(s) and rationale utilized for the decision.

Step 6 Preparation of Supplement or New Agreement for the Consultant's Claim(s)

The agency shall write the supplement and/or new agreement and pay the consultant the amount of the claim. Inform the consultant that the final payment for the agreement is subject to audit

CITY OF MOUNTLAKE TERRACE

STAFF REPORT

To: Mountlake Terrace City Council
From: Gary Schimek, Public Works Director
Meeting Date: May 28, 2026
Subject: Review Ordinance Adopting McLeod Telecommunications Franchise Agreement

Required Reviews:

Jennifer Joki	Created/Initiated - 05/19/2026
Gary Schimek	Approved - 05/19/2026
Sirke Salminen	Approved - 05/19/2026
Hillary Evans	Approved - 05/20/2026
Carolyn Hope	Final Approval - 05/21/2026

Council Goal(s):
Responsible Governance to Ensure Desired Level of Service

Legislative History:
June 1, 2015 - City Council adopted Ordinance No. 2664 granting a 10-year Franchise to McLeod USA Telecommunications Services.

Subject Summary:
On June 1, 2015, the City Council adopted Ordinance No. 2664 granting a 10-year Franchise to McLeod USA Telecommunications Services, LLC (hereafter “McLeod”). The Franchise granted by Ordinance No. 2664 expired on May 31, 2025, and McLeod wishes to enter into a new 10-year Franchise Agreement with the City under similar terms and conditions as extended by Ordinance No. 2664.

The agreement allows McLeod USA Telecommunications Services, LLC to construct, maintain, replace, acquire, sell, lease, and use all necessary equipment and facilities thereto within the public rights-of-way of the City. Grantee's authorization shall extend to those telecommunications facilities within City of Mountlake Terrace Right of Way. The term of this agreement shall be for a period of ten (10) years and may be renewed.

Two options are presented for action by City Council:

Option 1: Approve the agreement and ordinance as written.

Option 2: Request edits to the agreement and/or ordinance for continued discussion with McLeaod USA Telecommunications.

Financial/Budget Impacts:

Budget Amendment Required? N/A

Budget and Sources:	N/A
Expenditure:	N/A
New Appropriation Required + Sources:	N/A

Additional Financial Information:
N/A

Community Notifications:
City Council Agenda
If "Other," please specify:

Board/Commission Recommendation:
N/A

Staff Recommendation:
Staff recommends the City Council vote to adopt the ordinance and franchise agreement as written. This can be accomplished following a public hearing on this item at the council meeting on June 4, 2026.

Council Motion:
N/A

Attachments:
1. McLeod Franchise Agreement (Draft)
2. McLeod Franchise Agreement 2015 (Expired)

CITY OF MOUNTLAKE TERRACE

ORDINANCE NO. XXX

AN ORDINANCE OF THE CITY OF MOUNTLAKE TERRACE, WASHINGTON, PROVIDING AUTHORIZATION TO THE MAYOR TO SIGN A FRANCHISE AGREEMENT WITH MCLEOD USA TELECOMMUNICATIONS SERVICES, LLC; PROVIDING FOR SEVERABILITY; AND ESTABLISHING AN EFFECTIVE DATE

WHEREAS, on June 1, 2015, the City Council adopted Ordinance No. 2664 granting a 10-year Franchise to McLeod USA Telecommunications Services, LLC (hereafter "McLeod"); and

WHEREAS, the Franchise granted by Ordinance No. 2664 expired on May 31, 2025, and McLeod wishes to enter into a new 10-year Franchise Agreement with the City under similar terms and conditions as extended by Ordinance No. 2664; and

NOW, THEREFORE, THE CITY COUNCIL OF THE CITY OF MOUNTLAKE TERRACE, WASHINGTON DO ORDAIN AS FOLLOWS:

Section 1. Authorization. The Mayor of Mountlake Terrace is authorized to sign the Franchise Agreement with McLeod USA Telecommunications Services, LLC, as attached hereto as Exhibit A, which is attached hereto and incorporated herein by reference.

Section 2. Corrections. The City Clerk and codifiers of the ordinance are authorized to make necessary corrections to this ordinance including, but not limited to, the correction of scrivener/clerical errors, references, ordinance numbering, section/subsection numbers and any references thereto.

Section 3. Severability. If any section, subsection, paragraph, sentence, clause or phrase of this ordinance is declared unconstitutional or invalid for any reason, such invalidity shall not affect the validity or effectiveness of the remaining portions of this ordinance.

Section 4. Summary, Publication, and Effective Date. This Ordinance or a summary thereof consisting of the title shall be published in the official newspaper of the City and shall take effect and be in full force five (5) days after its adoption and publication as required by law.

ADOPTED BY THE CITY COUNCIL ON XXXX XX, 2026.

_____
Steve Woodard, Mayor

ATTEST:

_____

Jennifer Joki, City Clerk

APPROVED AS TO FORM:

_____

Hillary J. Evans, City Attorney

Section 1. Franchise Granted.

Section 1.1 Pursuant to RCW 35A.47.040, the City of Mountlake Terrace, a Washington municipal corporation, hereby grants to McLeod USA Telecommunications Services, LLC (the "Franchisee"), its heirs, successors, legal representatives and assigns, subject to the terms and conditions hereinafter set forth, a franchise for a period of ten (10) years, beginning on the effective date of this ordinance, set forth in Section 41 below. Ordinance No. XXXX is hereby repealed and in its place, the following provisions are enacted. Section

Section 1.2 This franchise grants Franchisee the right, privilege, and authority to construct, operate, maintain, replace, acquire, sell, lease and use all necessary Facilities for a fiber optic cable network, in, under, on, across, over, through, along or below the public Rights-of-Ways located in the City of Mountlake Terrace, as approved pursuant to City permits issued pursuant to this franchise and Chapter 12.20 of the Mountlake Terrace Municipal Code ("MTMC"). Public "Rights-of-Way" as used herein means all public streets, roads, alleys, and highways of the City as now or hereafter laid out, platted, dedicated or improved. "Facilities" as used herein means a fiber optic cable system, with all necessary cables, wires, conduit, ducts, pedestals, antennas, electronics, and other necessary appurtenances; provided that new utility poles for overhead wires or cabling are specifically excluded. Equipment enclosures with air conditioning or other noise generating equipment are also excluded from permitted "Facilities."

Section 2. Authority Limited to Occupation of Public Rights of Way

The authority granted herein is a limited authorization to occupy and use specific Rights-of-Way of the City. Nothing contained herein shall be construed to grant or convey any right, title, or interest in the Rights-of-Way of the City to the Franchisee other than for the purpose of providing telecommunications services. Franchisee hereby warrants that it currently provides or expects to provide the following services within the City: optic fiber for telecommunications (the "Services"). If Franchisee elects to expand the Services provided within the City it shall provide written notification of the addition of such services at least thirty (30) days in advance of the date such provision of services are offered for sale or otherwise provided.

Section 2.1 As described in Section 8, construction is not authorized without the appropriate permits, leases, easements or approvals. This franchise does not and shall not convey any right to Franchisee to install its Facilities on, under. over, across or to otherwise use City owned or leased properties of any kind outside of the area shown on Exhibit A {the "Franchise Area") or to install Facilities on, under, over, across or otherwise use any City owned or leased property other than public roads, streets, avenues. alleys and highways. This franchise does not convey any right to Franchisee to install its facilities on, under, over or across any facility or structure owned by a third-party without such written approval of the third-party. No substantive expansions, additions to or modifications or relocation of any of the Facilities shall be permitted without first having received prior authorization from the City.

DRAFT

Section 2.2 Under this Franchise, the Facilities shall not be used for Cable Services as that term is defined in 47 U.S.C § 522(6).

Section 3. Non-Exclusive Franchise Grant. This franchise is granted upon the express condition that it shall not in any manner prevent the City from granting other or further franchises in, along, over, through, under, below, or across any said Rights-of-Way. Such franchise shall in no way prevent or prohibit the City from using any of said roads, streets or other public properties or affect its jurisdiction over them or any part of them, and the City shall retain power to make nil necessary changes, relocations, repairs, maintenance, establishment, improvement, dedication of same as the City may deem fit, including the dedication, establishment, maintenance, and improvement of all new Rights-of-Way, thoroughfares and other public properties of every type and description.

Section 4. Location of Telecommunications Facilities. Franchisee is maintaining a fiber optic cable network, consisting of Facilities within the City. Franchisee may locate its Facilities anywhere within the Franchise Area subject to the City's applicable permit requirements. Franchisee shall not be required to amend this franchise to construct or acquire Facilities within the Franchise Area, provided that Franchisee does not expand its Services beyond those described in Section 2.

Section 5. Relocation of Telecommunications Facilities.

Section 5.1 Within thirty (30) days, or such other time period designated by the City, Franchisee agrees and covenants to protect, support, temporarily disconnect, relocate or remove from any Rights-of-Way any of its Facilities when reasonably required by the City by reason of traffic conditions or public safety, dedications of new Rights-of-Way and the establishment and improvement thereof, widening and improvement of existing Rights-of-Way, street vacations, freeway construction, change or establishment of street grade, or the construction of any public improvement or structure by any governmental agency acting in a governmental capacity or as otherwise necessary for the operations of the City or other governmental entity, provided that Franchisee shall in all such cases have the privilege to temporarily bypass, in the authorized portion of the same Rights-of-Way upon approval by the City, any section of cable required to be temporarily disconnected or removed. Except as otherwise provided by law, the costs and expenses associated with relocations ordered pursuant to this Section 5.1 shall be borne by Franchisee.

Section 5.2 Upon request of the City and in order to facilitate the design of City street and Right-of-Way improvements, the Franchisee agrees, at its sole cost and expense, to locate, and if reasonably determined necessary by the City, to excavate and expose its Facilities for inspection so that the location of the same may be taken into account in the improvement design. The decision as to whether said Facilities need to be relocated in order to accommodate the City's improvements shall be made by the City upon review of the location and construction of the Franchisee's facilities.

Section 5.3 If the City determines that the project necessitates the relocation of Franchisee's then existing Facilities, the City shall:

DRAFT

(a) At least sixty (60) days prior to the commencement of such improvement project, provide Franchisee with written notice requiring such relocation; provided, however, that in the event of an emergency posing a threat to public safety or welfare, or in the event of an emergency beyond the control of the City, the City shall give the Franchisee written notice as soon as practicable.

(b) Provide Franchisee with copies of pertinent portions of the plans and specifications for such improvement project and a proposed location for Franchisee's Facilities so that Franchisee may relocate its Facilities in other City Rights-of-Way in order to accommodate such improvement project.

(c) After receipt of such notice and such plans and specifications, Franchisee shall complete relocation of its Facilities at least ten (10) days prior to commencement of the City's project at no charge or expense to the City. Relocation shall be accomplished in such a manner as to accommodate the City's project. In the event of an emergency, the Franchisee shall relocate its Facilities within the time period specified by the City.

Section 5.4 Franchisee may, after receipt of written notice requesting a relocation of its Facilities, submit to the City written alternatives to such relocation. Such alternatives must be submitted at least forty-five (45) days prior to commencement of the project. The City shall evaluate such alternatives and advise Franchisee in writing if one or more of the alternatives are suitable to accommodate the work which would otherwise necessitate relocation of the Facilities. If so requested by the City, Franchisee shall submit at its sole cost and expense additional information to assist the City in making such evaluation. The City shall give each alternative proposed by Franchisee full and fair consideration. In the event the City ultimately determines that there is no other reasonable or feasible alternative, Franchisee shall relocate its Facilities as otherwise provided in this Section 5.

Section 5.5 The provisions of this Section 5.5 shall in no manner preclude or restrict Franchisee from making any arrangements it may deem appropriate when responding to n request for relocation of its Facilities by any person or entity other than the City, where the facilities to be constructed by said person or entity are not or will not become City-owned, operated or maintained facilities, provided that such arrangements do not unduly delay a City construction project.

Section 5.6 The Franchisee will indemnify, hold harmless, and pay the costs of defending the City against any and all claims, suits, actions, damages, or liabilities for delays on City construction projects caused by or arising out of the failure of the Franchisee to remove or relocate its Facilities in a timely manner; provided, that the Franchisee shall not be responsible for damages due to delays caused by circumstances beyond the control of the Franchisee or the negligence, willful misconduct, or unreasonable delay of the City.

DRAFT

Section 5.7 Whenever any person shall have obtained permission from the City to use any street or public way for the purpose of moving any building, the Franchisee, upon seven (7) days' written notice from the City, shall raise or remove, at the expense of the person desiring to move the building, any of the Franchisee's Facilities which may obstruct the removal of such building.

Section 5.8 The provisions of this Section 5 shall survive the expiration or termination of this franchise.

Section 6. Undergrounding of Facilities.

Section 6.1 Except as specifically authorized by permit of the City, Franchisee shall not be permitted to erect poles or to run or suspend wires, cables or other facilities thereon, but shall lay such wires, cables or other facilities underground in the manner required by the City. Franchisee acknowledges and agrees that if the City does not require the undergrounding of its Facilities at the time of permit application, the City may, at any time in the future, require the conversion of Franchisee's aerial facilities to underground installation at Franchisee's expense, except as required by law. Unless otherwise permitted by the City, Franchisee shall underground its Facilities in all new developments and subdivisions, and any development or subdivision where utilities arc currently underground.

Section 6.2 Whenever the City may require the undergrounding of the aerial utilities in any area of the City, Franchisee shall underground its aerial facilities in the manner specified by the City, concurrently with and in the area of the other affected utilities. The location of any such relocated and underground utilities shall be approved by the City. Where other utilities are present and involved in the undergrounding project, Franchisee shall only be required to pay its fair share of common costs borne by all utilities, in addition to the costs specifically attributable to the undergrounding of Franchisee's own Facilities. "Common costs" shall include necessary costs not specifically attributable to the undergrounding of any particular facility, such as costs for common trenching and utility vaults. "Fair share" shall be determined for a project on the basis of the number and size of Franchisee's Facilities being undergrounded in comparison to the total number and size of all other utility facilities being undergrounded. The provisions of this Section 6 shall survive the expiration, revocation, or termination of this Franchise. Nothing in this Section 6 shall be construed as requiring the City to pay any costs of undergrounding any of the Franchisee's Facilities.

Section 7. Maps and Records. Aller construction is complete, the Franchisee shall provide the City with accurate copies of as-built plans and maps in a form and content reasonably prescribed by the City Engineer or any other department director as the City Manager may designate, These plans and maps shall be provided at no cost to the City, and shall include hard copies and digital files in Autocad, ArcGIS.MDB or other readable formats approved by the City and delivered electronically.

DRAFT

Section 7.1 Within ten (10) days of a written request from the City Engineer or any other department director as the City Manager may designate, the Franchisee shall furnish the City with information sufficient to demonstrate: 1) that the Franchisee has complied with all applicable requirements of this Franchise; and 2) that all sales, utility and/or telecommunications taxes due the City in connection with the Franchisee's services and Facilities provided by the Franchisee have been properly collected and paid by the Franchisee.

Section 7.2 All books, records, maps and other documents, maintained by the franchisee with respect to its facilities within the Rights-of-Way shall be made available for inspection by the City at reasonable times and intervals; provided, however, that nothing in this Section 7.2 shall be construed to require the Franchisee to violate state or federal law regarding customer privacy, nor shall this Section 7.2 be construed to require the franchisee to disclose proprietary or confidential information without adequate safeguards for its confidential or proprietary nature.

Section 7.3 Franchisee shall not be required to disclose information that it reasonably deems to be proprietary or confidential in nature. The City agrees to keep confidential any proprietary or confidential books or records to the extent permitted by law. Franchisee shall be responsible for clearly and conspicuously identifying the work as confidential or proprietary and shall provide a brief written explanation as to why such information is confidential and how it may be treated as such under state and federal law. In the event that the City receives a public records request under chapter 42.56 RCW or similar law for the disclosure of information Franchisee has designated as confidential, trade secret or proprietary, the City shall promptly provide notice of such disclosure so that Franchisee can take appropriate steps to protect its interests. Nothing in this Section 7.3 prohibits the City from complying with chapter 42.56 RCW, or any other applicable law or court order requiring the release of public records, and the City shall not be liable to Franchisee for compliance with any law or court order requiring the release of public records. The City shall comply with any injunction or court order obtained by Franchisee which prohibits the disclosure of any such confidential records; however, in the event a higher court overturns such injunction or court order, Franchisee shall reimburse the City for any fines or penalties imposed for failure to disclose such records.

Section 8. Work in the Rights-of-Way. During any period of relocation, construction or maintenance, all work performed by Franchisee or its contractors shall be accomplished in a safe and workmanlike manner, so to minimize interference with the free passage of traffic and the free use of adjoining property, whether public or private. Franchisee shall at all times post and maintain proper barricades, flags, flaggers, lights, flares and other measures as required for the safety of all members of the general public and comply with all applicable safety regulations during such period of construction as required by the ordinances of the City, including but not limited to MTMC 12.20, or the laws of the State of Washington, including RCW 39.04.180 for the construction of trench safety systems. The provisions of this Section 8 shall survive the expiration or tcm1ination of this franchise ordinance.

DRAFT

Section 8.1 Whenever Franchisee shall commence work in any public Rights-of-Way for the purpose of excavation, installation, construction, repair, maintenance, or relocation of its cable or equipment, it shall apply to the City for a pcm1it to do so pursuant to Chapter 12.20 MTMC and, in addition, shall give the City at least ten (I0) working days prior notice of its intent to commence work in the Rights-of-Way. During the progress of the work, the Franchisee shall not unnecessarily obstruct the passage or proper use of the Rights-of-Way, and all work by the Franchisee in the area shall be performed in accordance with applicable City standards and specifications and warranted for a period of two (2) years. In no case shall any work commence within any Rights-of- Way without a permit, except as otherwise provided in this franchise ordinance.

Section 8.2 If either the City or Franchisee shall at any time plan to make excavations in any area covered by this franchise and as described in this Section 8.2, the party planning such excavation shall afford the other, upon receipt of a written request to do so, a reasonable opportunity to share such excavation, PROVIDED THAT:

(a) Such joint use shall not unreasonably delay the work of the party causing the excavation to be made; and

(b) Such joint use shall be arranged and accomplished on terms and conditions satisfactory to both parties; and

(c) Either party may deny such request for safety reasons.

Section 8.3 Franchisee shall provide a notice indicating the nature and location of the work to be performed at least twenty-four (24) hours prior to entering private property or streets or public easements adjacent to or on such private property. Such notice shall be physically posted upon the affected property by the Franchisee; a door hanger is permissible. The Franchisee shall make a good faith effort to comply with the property owner/resident's preferences, if any, on location or placement of underground installations (excluding aerial cable lines utilizing existing poles and existing cable paths), consistent with sound engineering practices.

Section 8.4 The Franchisee, in accordance with applicable federal, state and local safety requirements, shall, at all times, employ ordinary care and shall install and maintain and use commonly accepted methods and devices for preventing failures and accidents which are likely to cause damage, injury or nuisance to the public. All structures and all lines, equipment and connections in, over, under and upon the streets, sidewalks, alleys and public ways or places of a permit area, wherever situated or located, shall at all times be kept and maintained in a safe, suitable condition and in good order and repair. The City reserves the general right to sec that Franchisee's Facilities arc constructed and maintained in a safe condition. 1f a violation of the National Electrical Safety Code or other applicable regulation is found to exist by the City, the City will, after discussions with Franchisee, establish a reasonable time for Franchisee to make necessary repairs. If the repairs are not made within the established time frame, the City may make the repairs itself or have them made and collect all reasonable costs thereof from a Franchisee.

DRAFT

Section 8.5 Franchisee may trim trees upon and overhanging on public ways, streets, alleys, sidewalks, and other public places of the City so as to prevent the branches of such trees from coming in contact with the Franchisee's wires and cables. This Section 8.5 shall only apply to the extent necessary to protect above ground Facilities. Franchisee shall ensure that its tree trimming activities protect the appearance, integrity and health of the trees to the extent reasonably possible. Franchisee shall prepare and maintain a tree trimming schedule to ensure compliance with this Section 8.5 and to avoid exigent circumstances where tree cutting, trimming or removal is necessary to protect the public safety or continuity of service without the regard for the appearance, integrity or health of the trees that planned maintenance would otherwise allow. Franchisee shall submit the schedule to the City Engineer or any other department director as the City Manager may designate. All trimming is to be done after the explicit prior written notification and approval of the City and at the expense of the Franchisee. Franchisee may contract for such services, however, any firm or individual so retained shall receive City approval prior to commencing such trimming.

Section 8.6 In compliance with MTMC Section 12.20.580, Franchisee shall meet with the City and other franchise holders and users of the Rights-of-Way annually by February 1st of each calendar year during the term of this franchise, or upon written notice as determined by the City, to schedule and coordinate construction in the Rights-of-Way. All construction locations, activities, and schedules shall be coordinated. as ordered by the City to minimize public inconvenience, disruption or damages.

Section 9. One Call Locator Service. Prior to doing any work in the Rights-of-Way, the Franchisee shall follow established procedures, including contacting the Utility Notification Center in Washington and comply with all applicable State statutes regarding the One Call Locator Service pursuant to chapter 19.122 RCW.

Section 10 Ducts or Conduits. Franchisee shall inform the City with at least thirty(30) days' advance written notice that it is constructing, relocating, or placing ducts or conduits in the Rights-of-Way and provide the City with an opportunity to request that Franchisee provide the City with additional duct or conduit and related structures necessary to access the conduit pursuant to RCW 35.99.070.

Section 11. Restoration after Construction. Franchisee shall, after abandonment approved under Section 19 herein, or installation, construction, relocation, maintenance or repair of its Facilities within the Franchise Area, promptly remove any obstructions from the Rights-of- Way and restore the surface of the Rights-of-Way to at least the same condition the property was in immediately prior to any such installation, construction, relocation, maintenance or repair. The City Engineer or any other department director as the City Manager may designate shall have final approval of the condition of such streets and public places after restoration. All concrete encased monuments which have been disturbed or displaced by such work shall be restored pursuant to all federal, state and local standards and specifications. Franchisee agrees to promptly complete all restoration work and to promptly repair any damage caused by such work to the Franchise

DRAFT

Area or other affected area at its sole costs and expense and according to the time and terms specified in the construction permit issued by the City. All work by the Franchisee pursuant to this Section 11 shall be performed in accordance with applicable City standards and warranted after final acceptance for a period of two (2) years. In the event the Franchisee does not repair a Right-of-Way or an improvement in or to a Right-of-Way in a prompt fashion or as agreed to with the City Engineer or any other department director as the City Manager may designate. the City may repair the damage and shall be reimbursed its actual cost within thirty (30) days of submitting an invoice to Franchisee. The provisions of this Section 11 shall survive the expiration, revocation or termination of this franchise.

Section 12. Emergency Work. In the event of any emergency in which any of Franchisee's Facilities located in or under any street breaks, becomes damaged, or if Franchisee's construction area is otherwise in such a condition as to immediately endanger the property, lite, health or safety of any individual, Franchisee shall immediately take the proper emergency measures to repair its Facilities, to cure or remedy the dangerous conditions for the protection of property, life, health or safety of individuals without first applying for and obtaining a pem1it as required by this franchise. However, this shall not relieve Franchisee from the requirement of obtaining any permits necessary for this purpose, and Franchisee shall apply for all such permits not later than the next succeeding day during which the Mountlake Terrace City Hall is open for business. The City retains the right and privilege to cut or move any Facilities located within the Rights-of-Way of the City, as the City may determine to be necessary, appropriate or useful in response to any public health or safety emergency. The City shall notify Franchisee by telephone promptly upon learning of the emergency and shall exercise reasonable efforts to avoid an interruption of Franchisee's operations.

Section 13. Dangerous Conditions. Authority for City to Abate. Whenever the construction, installation or excavation of Facilities authorized by this franchise has caused or contributed to a condition that appears to substantially impair the lateral support of the adjoining street or public place, or endangers the public, an adjoining public place, street utilities or City property, the City Engineer or any other department director as the City Manager may designate may direct Franchisee, at Franchisee's own expense, to take reasonable action to protect the public, adjacent public places, City property or street utilities, and such action may include compliance within a prescribed time. In the event that Franchisee foils or refuses to promptly take the actions directed by the City, or fails to fully comply with such directions, or if emergency conditions exist which require immediate action, before the City can timely contact Franchisee to request Franchisee effect the immediate repair, the City may enter upon the property and take such reasonable actions as are necessary to protect the public, the adjacent streets, or street utilities, or to maintain the lateral support thereof, or reasonable actions regarded as necessary safety precautions, and Franchisee shall be liable to the City for the costs thereof.

DRAFT

Section 14. Damage to Franchisee's Facilities. In accordance with MTMC Section 12.20.480, unless directly and proximately caused by the willful, intentional or malicious acts of the City, the City shall not be liable for any damage to or loss of Facilities within the Rights-of- Way as a result of or in connection with any public works, public improvements, construction, grading, excavation, filling, or work of any kind in the Rights-of-Way by or on behalf of the City. The City shall further not be liable to the Franchisee for any direct, indirect, or any other such damages suffered by any person or entity of any type, including franchisee, as a direct or indirect result of the City's actions under Section 12 or Section 13.

Section 15. Recovery of Costs. Franchisee shall pay a grant fee for the City's administrative, legal, and other costs incurred in drafting and processing this franchise ordinance and all work related thereto. No construction permits shall be issued for the installation of Facilities authorized hereby until such time as the City has received payment of the grant fee. Franchisee shall further be subject to all permit fees associated with activities undertaken through the authority granted in this franchise ordinance or under the laws of the City. Where the City incurs costs and expenses for review, inspection or supervision of activities, including but not limited to foes associated with attorneys, consultants, City Staff and City Attorney time, undertaken through the authority granted in this franchise or any ordinances relating to the subject for which a permit foe is not established, Franchisee shall pay such costs and expenses directly to the City. The City shall submit an itemized statement to McLeod Telecommunications Services, LLC, describing the activities and services performed and the dates upon which said activities and services were provided and the time spent on each task and the total sum due and owing. In addition to the above, Franchisee shall promptly reimburse the City for any and nil costs the City reasonably incurs in response to any emergency involving Franchisee's Facilities. Franchisee shall reimburse the City within sixty (60) days of submittal by the City of an itemized billing for incurred costs, itemized by project, for the Franchisee's proportionate share of all actual, identified expenses incurred by the City in planning, constructing, installing, repairing, altering, or maintaining any City facility as the result of the presence of Franchisee's Facilities in the Rights-of-Way. Such costs and expenses shall include but not be limited to the Franchisee's proportionate cost of City personnel assigned to oversee or engage in any work in the Rights-of-Way as the result of the Franchisee's Facilities in the Rights-of-Way. Such costs and expenses shall also include the Franchisee's proportionate share of any time spent reviewing construction plans in order to either accomplish the relocation of the franchisee's Facilities or the routing or rerouting of any utilities so as not to interfere with the Franchisee's Facilities.

Section 16. City's Reservation of Rights. Pursuant to RCW 35.21.860, the City is precluded from imposing a franchise fee on a telephone business as defined in RCW 82.16.010, except for administrative expenses or any tax authorized by state law. Franchisee hereby warrants that its operations as authorized under this franchise are those of a telephone business as defined in RCW 82.16.010. As a result, the City will not impose a franchise fee under the terms of this ordinance, other than as described herein.

DRAFT

Franchisee acknowledges that its operation with the City may constitute a telephone business subject to the utility tax imposed pursuant to MTMC Chapter 3.145. Franchisee understands that RCW 35.21.870 currently limits the rate of city tax upon telephone business activities to six percent (6%) of gross receipts unless a higher rate is otherwise approved. The parties agree, however, that nothing in this franchise shall limit the City's power of taxation as may now or hereafter exist. Franchisee stipulates and agrees that should its business activities be subject to taxation that Franchisee shall pay to the City the rate then applicable to such services under MTMC Chapter 3.145, the City's utility tax code. and consistent with state and federal law. This provision does not limit the City's power to amend MTMC Chapter 3.145 as may be permitted by law.

The City hereby reserves its right to impose a franchise fee on Franchisee for purposes other than to recover its administrative expenses. if Franchisee's operations as authorized by this franchise change so that not all uses of the franchise are those of a "telephone business" as defined in RCW 82.16.010; or if statutory prohibitions on the imposition of such fees are removed. In either instance, the City also reserves its right to require that Franchisee obtain a separate franchise for its change in use, which franchise may include provisions intended to regulate Franchisee's operations, as allowed under applicable law. Nothing contained herein shall preclude

Section 17. Indemnification. Franchisee hereby releases, covenants not to bring suit and agrees to indemnify, defend and hold harmless the City, its officers, employees, agents and representatives from any and all claims, costs, judgments, awards or liability to any person, including claims by Franchisee's own employees for which Franchisee might otherwise be immune under Title 51 RCW, for injury or death of any person or damage to property caused by or arising out of the negligent acts or omissions of Franchisee, its agents, servants, officers or employees in the performance of this franchise, and any rights granted hereunder.

Section 17.1 Inspection or acceptance by the City of any work performed by Franchisee at the time of completion of construction shall not be grounds for avoidance by Franchisee of any of its obligations under this Section 17.1. Said indemnification obligations shall extend to claims which are not reduced to a suit and any claims which may be compromised, with Franchisee's consent, prior to the culmination of any litigation or the institution of any litigation.

Section 17.2 In the event that Franchisee refuses the tender of defense in any suit or any claim, said tender having been made pursuant to the indemnification provision contained herein, and said refusal is subsequently determined by a court having jurisdiction (or such other tribunal that the parties shall agree to decide the matter), to have been a wrongful refusal on the part of Franchisee, the Franchisee shall pay all of the City's reasonable costs for defense of the action, including all expert witness fees, costs, and attorney's fees, and including costs and fees incurred in recovering under this indemnification provision.

DRAFT

Section 17.3 In the event of liability for damages arising out of bodily injury to persons or damages to property caused by or resulting from the concurrent negligence of Franchisee and the City, its officers, employees and agents, Franchisee's liability hereunder shall be only to the extent of Franchisee's negligence. It is further specifically and expressly understood that the indemnification provision provided herein constitutes Franchisee's waiver or immunity under Title 51 RCW, solely for the purposes of this indemnification. This waiver has been mutually negotiated by the parties.

Section 17.4 The obligations of Franchisee under the indemnification provisions of this Section 17 shall apply regardless of whether liability for damages arising out of bodily injury to persons or damages to property were caused or contributed to by the concurrent negligence of the City, its officers, agents, employees or contractors. The provisions of this Section 17, however, are not to be construed to require the Franchisee to hold harmless, defend or indemnify the City as to any claim, demand, suit or action which arises out of the sole negligence, willful misconduct, or criminal acts of the City. In the event that a court of competent jurisdiction determines that this Franchise is subject to the provisions of RCW 4.24.115, the parties agree that the indemnity provisions hereunder shall be deemed amended to conform to said statute and liability shall be allocated as provided therein.

Section 17.5 Notwithstanding any other provisions or this Section 17, Franchisee assumes the risk of damage to its Facilities located in the Rights-of-Way and upon City-owned property from activities conducted by the City, its officers, agents, employees, volunteers, elected and appointed officials, and contractors, except to the extent any such damage or destruction is caused by or arises from any willful, malicious, or criminal actions on the part of the City, its officers, agents, employees, volunteers, or elected or appointed officials, or contractors. Franchisee releases and waives any and all such claims against the City, its officers, agents, employees, volunteers, or elected or appointed officials, or contractors. Franchisee further agrees to indemnify, hold harmless and defend the City against any claims for damages, including, but not limited to, business interruption damages and lost profits, brought by or under users of Franchisee's Facilities as the result of any interruption of service due to damage or destruction of Franchisee's Facilities caused by or arising out of activities conducted by the City, its officers, agents, employees or contractors, except to the extent any such damage or destruction is caused by or arises from the sole negligence or any willful, malicious, or criminal actions on the part of the City, its officers, agents, employees, volunteers, or elected or appointed officials, or contractors.

Section 17.6 The provisions of this Section 17 shall survive the expiration, revocation, or termination of this franchise.

DRAFT

Section 18. Insurance. Franchisee shall procure and maintain for the duration of the franchise insurance against claims for injuries lo persons or damages to property which may arise from or in connection with the exercise of rights, privileges and authority granted hereunder to Franchisee, its agents, representatives or employees. Franchisee shall require that every subcontract shall bind the subcontractor to follow all applicable terms of this Section. Franchisee shall provide a copy of a Certificate of Insurance to the City for its inspection at the time of or prior to acceptance of this franchise ordinance, and such insurance certificate shall evidence a policy of insurance that includes:

(a) Automobile Liability insurance with limits no less than $5,000,000 Combined Single Limit per occurrence for bodily injury and property damage; and

(b) Commercial General Liability insurance, written on an occurrence basis with limits no less than $5,000,000 combined single limit per occurrence and $5,000,000 aggregate for personal injury, bodily injury and property damage. Coverage shall include but not be limited to: blanket contractual; premises; operations; independent contractors; stop gap liability; personal injury; products and completed operations; broad form property damage; explosion, collapse and underground (XCU); and employer's liability; and

(c) Professional Liability insurance with limits no less than $2,000,000 per claim for all professionals employed or retained by Franchisee to perform services under this franchise; and

(d) Workers' Compensation coverage as required by the Industrial Insurance laws of the State of Washington.

Any deductibles or self-insured retentions must be declared to and approved by the City.

Payment of deductible or self-insured retention shall be the sole responsibility of Franchisee.

The insurance policies obtained by Franchisee shall name the City, its officers, officials, employees, agents, and volunteers, as an additional insured with regard to activities performed by or on behalf of Franchisee. The coverage shall contain no special limitations on the scope of protection afforded to the City, its officers and officials, employees or volunteers. In addition, the insurance policy shall contain a clause stating that coverage shall apply separately to each insured against whom claim is made or suit is brought, except with respect to the limits of the insurer's liability. Franchisee's insurance shall be primary insurance as respects the City, its officers, officials, employees, agents, and volunteers. Any insurance maintained by the City, its official's, officials, employees, agents, and volunteers shall be excess of franchisee's insurance and shall not contribute with it.

DRAFT

In addition to the coverage requirements set forth in this Section 18, each such insurance policy shall contain the following endorsement:

> It is hereby understood and agreed that this policy may not be canceled nor the intention not to renew be stated until 90 days after receipt by the City, by registered mail, of a written notice addressed to the City Manager or such intent to cancel or not to renew.

Within sixty (60) days after receipt by the City of any insurance cancellation notice, and in no event later than thirty (30) days prior to said cancellation or intent not to renew, the Franchisee shall obtain and furnish to the City replacement insurance policies meeting the requirements of this Section 18.

Section 19. Abandonment or Franchisee's Fiber Optic Cubic Network. Upon the expiration, termination, or revocation of the rights granted under this Franchise, the Franchisee shall remove all of its Facilities from the Rights-of-Way within thirty (30) days of receiving notice from the City Engineer any other department director as the City Manager may designate. The Facilities, in whole or in part, may not be abandoned by Franchisee without written approval by the City. Any plan for abandonment or removal of Franchisee's Facilities must be first approved by the City Engineer or any other department director as the City Manager may designate, and all necessary permits must be obtained prior to such work. Provided, however, that the City may permit the Franchisee's improvements to be abandoned and placed in such a manner as the City may prescribe. Upon permanent abandonment, and the Franchisee's agreement to transfer ownership of the Facilities to the City, the Franchisee shall submit to the City a proposal and instruments for transferring ownership to the City. Any such Facilities which are not permitted to be abandoned in place and which are not removed within thirty (30) days of receipt of said notice shall automatically become the property of the City. Provided, however, that nothing contained within this Section 19 shall prevent the City from compelling the Franchisee to remove any such Facilities through judicial action when the City has not permitted the Franchisee to abandon said Facilities in place. The provisions of this Section 19 shall survive the expiration, revocation or termination of this franchise ordinance,

Section 20. Construction and Completion Bond. Franchisee shall furnish a construction and completion bond written by a corporate surety acceptable to the City equal to at least 150% of the estimated cost of constructing the Franchisee's Facilities within the Rights-of-Way of the City prior to commencement of any such work. The bond shall guarantee the following: (1) timely completion of construction; (2) construction in compliance with all applicable plans, permits, technical codes, and standards; (3) proper location of the Facilities as specified by the City; (4) restoration of the Rights-of-Way and other properties affected by the construction; (5) submission of as-built drawings after completion of construction; and (6) timely payment and satisfaction of all claims, demands, or liens for labor, materials, or services provided in connection with the work which could be asserted against the City or City property. Said bond shall be required to remain in full force until sixty (60) days after completion of the construction and shall warrant all such restoration work for a period of two (2) years.

DRAFT

Section 21. Security Fund. Franchisee shall provide City with an irrevocable letter of credit or a performance bond in the amount of Fifty Thousand Dollars ($50,000) running or renewable for the term of this Franchise, in a form and substance reasonably acceptable to City. In the event Franchisee shall fail to substantially comply with any one or more of the provisions of this franchise following notice and n reasonable opportunity to cure, then there shall be recovered jointly and severally from the principal and any surety of such surety bond any damages suffered by City as a result thereof, including but not limited to staff time, material and equipment costs, compensation or indemnification of third parties. and the cost of removal or abandonment of facilities hereinabove described. Franchisee specifically agrees that its failure to comply with the terms of this Section 21 shall constitute a material breach of this franchise. Such a financial guarantee shall not be construed to limit Franchisee's liability to the guarantee amount or otherwise limit the City's recourse to any remedy to which the City is otherwise entitled at law or in equity. The parties shall comply with MTMC Section 12.20.560 before withdrawing any funds from the security fund.

Section 22. Nondiscrimination. In accordance with MTMC Section 12.20.220, Franchisee shall make its services available to any customer within the Franchise Area who shall request such service, without discrimination as to the terms, conditions, rates or charges for the Franchisee's services; provided, however, that nothing in this franchise shall prohibit Franchisee from making any reasonable classifications among differently situated customers.

Section 23. Modification. The City and Franchisee hereby reserve the right to alter, amend, or modify the terms and conditions of this franchise upon written agreement of both parties to such alteration, amendment or modification.

Section 24. Forfeiture and Revocation. If Franchisee willfully violates or fails to comply with any of the provisions of this franchise, or through willful misconduct or gross negligence fails to heed or comply with any notice given Franchisee by the City under the provisions of this franchise, then Franchisee shall, at the election of the Mountlake Terrace City Council, forfeit all rights conferred hereunder and this franchise may be revoked or annulled by the Council after a hearing held upon notice to Franchisee. Revocation of this franchise by the City shall comply with MTMC 12.20.

Section 25. Remedies to Enforce Compliance.

Section 25.1 The City may elect, without any prejudice to any of its other legal rights and remedies, to obtain an order from the superior court having jurisdiction compelling Franchisee to comply with the provisions of the franchise and to recover damages and costs incurred by the City by reason of Franchisee's failure to comply.

DRAFT

In addition to any other remedy provided herein, the City reserves the right to pursue any remedy to compel or force Franchisee and/or its successors and assigns to comply with the terms hereof, and the pursuit of any right or remedy by the City shall not prevent the City from thereafter declaring a forfeiture or revocation for breach of the conditions herein. Provided, further, that by entering into this franchise, it is not the intention of the City or Franchisee to waive any other rights, remedies, or obligations as otherwise provided by law equity, or otherwise, and nothing contained here shall be deemed or construed to effect any such waiver.

Section 25.2 If Franchisee shall violate, or fail to comply with any of the provisions of this franchise, or should it fail to heed or comply with any notice given to Franchisee under the provisions of this franchise, the City shall provide Franchisee with written notice specifying with reasonable particularity the nature of any such breach and Franchisee shall undertake all commercially reasonable efforts to cure such breach within thirty (30) days of receipt of notification. If City reasonably determines the breach cannot be cured within (30) thirty days, City may specify a longer cure period, and condition the extension of time on Franchisee's submittal of a plan to cure the breach within the specified period, commencement of work within the original thirty (30) day cure period, and diligent prosecution of the work to completion. If the breach is not cured within the specified time, or Franchisee does not comply with the specified conditions, City may, at its discretion, (1) revoke this Franchise with no further notification, or (2) claim damages of Two Hundred Fifty Dollars ($250.00) per day against the security fund set forth in Section 21, or (3) pursue other remedies as described in Section 25.1 above.

Section 26. Non-Waiver. The failure of the City to insist upon strict performance of any of the covenants and agreements of this franchise or lo exercise any option herein conferred in any one or more instances, shall not be construed to be a waiver or relinquishment of any such covenants, agreements or option or any other covenants, agreements or option.

Section 27. City Ordinances and Regulations. Nothing herein shall be deemed to restrict the City's ability to adopt and enforce all necessary and appropriate ordinances regulating the performance of the conditions of this franchise, including any valid ordinance made in the exercise of its police powers in the interest of public safety and for the welfare of the public. The City shall have the authority at all times to reasonably control by appropriate regulations the location, elevation, manner of construction and maintenance of any fiber optic cable or cable facilities by Franchisee, and Franchisee shall promptly conform with all such regulations, unless compliance would cause Franchisee to violate other requirements of law. In the event of a conflict between the provisions of this franchise ordinance and any other ordinance(s) enacted under the City's police power authority, including MTMC Chapter 12.20, such other ordinances(s) shall take precedence over the provisions set forth herein.

Section 28. Cost of Publication. The cost of publication of this franchise ordinance shall be borne by Franchisee.

DRAFT

Section 29. Survival. All of the provisions, conditions, and requirements of Section 5, Section 6, Section 8, Section 11, Section 17, Section 19, Section 30 and Section 40.7 of this Franchise shall be in addition to any and all other obligations and liabilities Franchisee may have to the City at common law, by statute, or by contract, and shall survive the City's franchise to Franchisee for the use of the Franchise Area, and any renewals or extensions thereof. All of the provisions, conditions, regulations and requirements contained in this franchise ordinance shall further be binding upon the heirs, successors, executors, administrators, legal representatives and assigns of Franchisee and all privileges, as well as all obligations and liabilities of Franchisee shall inure lo its heirs, successors and assigns equally as if they were specifically mentioned where Franchisee is named herein.

Section 30. Assignment.

Section 30.1 This agreement may not be assigned or transferred without the written approval of the City, which approval shall not be unreasonably withheld, except Franchisee may freely assign this Franchise in whole or in part to a parent or subsidiary organization or as part of any corporate financing, reorganization or refinancing. The Franchisee shall provide prompt, written notice to the City of any such assignment. The assignee or transferee must have the legal, technical, financial and other requisite qualifications to own and operate the Franchisee's telecommunications system, The Franchisee shall reimburse the City for all direct and indirect costs and expenses reasonably incurred by the City in considering a request to transfer or assign this franchise and shall pay the applicable application fee.

Section 30.2 Any transactions which singularly or collectively result in a change of fifty percent (50%) or more of the ownership or working control of the Franchisee, of the ownership or working control of the Facilities, of the ownership or working control of affiliated entities having ownership or working control of the Franchisee or of the Facilities, or of control of the capacity or bandwidth of the Franchisee's Facilities or substantial parts thereof, shall be considered an assignment or transfer requiring City approval. Transactions between affiliated entities are not exempt from City approval. The Franchisee shall promptly notify the City prior to any proposed change in, or transfer of, or acquisition by any other party of control of the Franchisee's company. Every change, transfer, or acquisition of control of a franchisee's company shall cause a review of the proposed transfer. [n the event that the City adopts a resolution denying its consent and such change, transfer or acquisition of control has been effected, the City may cancel this Franchise. All assignments and/or transfers of the franchise must comply with MTMC Section 12.20.590.

Section 30.3 Franchisee may, without the prior written consent of the City: (I) lease the Facilities, or any portion thereat: to another entity; (ii) grant an indefeasible right of user interest in the Facilities, or any portion thereof, to another entity; or (iii) offer or provide capacity or bandwidth from the Facilities to another person, PROVIDED THAT: Franchisee at all limes retains exclusive control over the Facilities and remains responsible for locating, servicing, repairing, relocating, or removing its Facilities pursuant to the terms and conditions of this Franchise and remains in compliance with this Franchise.

DRAFT

Section 31. Entire Agreement. This Franchise constitutes the entire understanding and agreement between the parties as to the subject matter herein and no other agreements or understandings, written or otherwise, shall be binding upon the parties upon execution of this franchise.

Section 32. Eminent Domain. The existence of this franchise shall not preclude the City from acquiring by condemnation in accordance with applicable law, all or a portion of the Franchisee's Facilities for the fair market value thereof. In determining the value of such Facilities, no value shall be attributed to the right to occupy the area conferred by this franchise.

Section 33. Vacation. If at any time the City, by ordinance, vacates all or any portion of the area affected by this franchise, the City shall not be liable for any damages or loss to the Franchisee by reason of such vacation. The City shall notify the Franchisee in writing not less than sixty (60) days before vacating all or any portion of any such area. The City may, after sixty (60) days written notice to the Franchisee, terminate this Franchise with respect to such vacated area.

Section 34. _Notice. Any Notice or information required or permitted to be given to the parties under this franchise agreement may be sent to the following addresses unless otherwise specified:

CITY OF MOUNTLAKE TERRACE
City Clerk
6100 219th Street SW, Suite 200
Mountlake Terrace, WA 98043-4629

McLeod Telecommunications Services, LLC
Attn: Franchises & Easements
1101 Anderson Drive
Little Rock, AR 72212
Corp.franchise.agreements@windstream.com

DRAFT

Section 35. Severability. If any section, sentence, clause or phrase of this ordinance should be held to be invalid or unconstitutional by a court of competent jurisdiction, such invalidity or unconstitutionality shall not affect the validity or constitutionality of any other section, sentence, clause or phrase of this ordinance unless such invalidity or unconstitutionality materially alters the rights, privileges, duties, or obligations hereunder, in which event either party may request renegotiation of those remaining terms of this franchise materially affected by such court's ruling.

Section 36. Compliance with all Applicable Laws. Franchisee agrees to comply with all present and future federal, state and local laws, ordinances, rules and regulations. This Franchise is subject to ordinances of general applicability enacted pursuant to the City's police powers. Franchisee further agrees to save and hold the City harmless from damage, loss or expense, arising out of the said use or work, unless caused by the City's sole negligence and to remove all liens and encumbrances arising as a result of said use or work. Franchisee shall, at its own expense, maintain its Facilities in a safe condition, in good repair and in a manner suitable to the City. Additionally, Franchisee shall keep its Facilities free of debris and anything of a dangerous, noxious or offensive nature or which would create a hazard or undue vibration, heat, noise or any interference with City services. City reserves the right at any time to amend this franchise to conform to any hereafter enacted, amended, or adopted federal or state statute or regulation relating to the public health, safety, and welfare, or relating to roadway regulation, or a City ordinance enacted pursuant to such federal or state statute or regulation upon providing Franchisee with thirty (30) days written notice of its action setting forth the full text of the amendment and identifying the statute, regulation, or ordinance requiring the amendment. Said amendment shall become automatically effective upon expiration or the notice period unless, before expiration of that period, Franchisee makes a written request for negotiations over the terms of the amendment. If the parties do not reach agreement as to the terms of the amendment within thirty (30) days of the call for negotiations, City may enact the proposed amendment, by incorporating Franchisee's concerns to the maximum extent City deems possible.

Section 37. Attorneys' Fees. If a suit or other action is instituted in connection with any controversy arising out of this Franchise, the prevailing party shall be entitled to recover all of its costs and expenses, including such sum as the court may judge as reasonable for attorneys' fees costs, expenses and attorneys' fees upon appeal of any judgment or ruling.

Section 38. Hazardous Substances. Franchisee shall not introduce or use any hazardous substances (chemical or waste), in violation of any applicable law or regulation, nor shall Franchisee allow any of its agents, contractors or any person under its control to do the same. Franchisee will be solely responsible for and will defend, indemnify and hold the City, its officers, officials, employees, agents and volunteers harmless from and against any and all claims, costs and liabilities including reasonable attorneys' fees and costs, arising out of or in connection with the cleanup or restoration of the property associated with franchisee's use, storage, or disposal of hazardous substances, whether or not intentional, and the use,

DRAFT

storage or disposal of such substances by Franchisee's agents, contractors or other persons acting under the Franchisee's control, whether or not intentional.

Section 39. Licenses, Fees and Taxes. Prior to constructing any improvements, Franchisee shall obtain a business or utility license from the City. Franchisee shall pay promptly and before they become delinquent, all taxes on personal property and improvements owned or placed by franchisee and shall pay all license fees and public utility charges relating to the conduct of its business, shall pay for all permits, licenses and zoning approvals, shall pay any other applicable tax unless

Section 40. Miscellaneous.

Section 40.1 City and Franchisee respectively represent that its signatory is duly authorized and has full right, power and authority to execute this franchise.

Section 40.2 This franchise shall be construed in accordance with the laws of the State of Washington. Venue for any dispute related to this franchise shall be the United States District Court for the Western District of Washington, or Snohomish County Superior Court.

Section 40.3 Section captions and headings arc intended solely to facilitate the reading thereof. Such captions and headings shall not affect the meaning or interpretation of the text herein.

Section 40.4 Where the context so requires, the singular shall include the plural and the plural includes the singular.

Section 40.5 Franchisee shall be responsible for obtaining all other necessary approvals, authorizations and agreements from any party or entity and it is acknowledged and agreed that the City is making no representation. warranty or covenant whether any of the foregoing approvals, authorizations or agreements are required or have been obtained by Franchisee by any person or entity.

Section 40.6 This franchise may be enforced at both law and equity.

Section 40.7 Franchisee acknowledges that it, and not the City, shall be responsible for the premises and equipment's compliance with all marking and lighting requirements of the FAA and the FCC. Franchisee shall indemnify and hold the City harmless from any fines or other liabilities caused by Franchisee's failure to comply with such requirements. Should Franchisee or the City be cited by either the FCC or the FAA because the Facilities or Franchisee's equipment is not in compliance and should franchisee fail to cure the conditions of noncompliance within the timeframe allowed by the citing agency, the City may either terminate this franchise immediately on notice to Franchisee or proceed to cure the conditions of noncompliance at Franchisee's expense.

DRAFT

CITY OF MOUNTLAKE TERRACE

STAFF REPORT

To: Mountlake Terrace City Council
From: Jeff Betz, Parks and Recreation Director
Meeting Date: May 28, 2026
Subject: Review Bid Award for Pedestrian Plaza (Transit Connection Corridor) Project

Required Reviews:

Jennifer Joki	Created/Initiated - 05/20/2026
Jeff Betz	Approved - 05/20/2026
Sirke Salminen	Approved - 05/22/2026
Hillary Evans	Approved - 05/22/2026
Carolyn Hope	Final Approval - 05/22/2026

Council Goal(s):
Growing our Vibrant Community
Responsible Governance to Ensure Desired Level of Service
An Informed and Engaged Community

Legislative History:
December 2018 - Community/Open House #1
January 2019 - Community/Open House #2
July 2022 - A/E Agreement for design of Transit Connection Corridor Project (Council)
November 2022 - Public Engagement Meeting/Design update
February 2023 - Public Engagement Meeting/Design update
May 2023 - Project Update & Design Amendment (Council)
May 2024 - Resolution accepting grant funds for obligation (Council)
November 2024 - Rights of Way Acquisition for Pedestrian Plaza (Council)

Regular updates are provided to RPAC during the monthly meetings.

Subject Summary:

The City began planning for the Transit Connection Corridor project long before the Lynnwood Link Light Rail Station was constructed. The City's intent, to create a space and improve pedestrian connectivity between the redeveloping town center, adjacent neighborhoods and the transit center. The Pedestrian Plaza would be the "gateway" to the City's Town Center.

Development of the design took several years as coordination was needed to align the plaza

design with Sound Transits final design and construction of their Lynnwood Link Light Rail Station. The 4,300 square-foot plaza space is tucked into the southwest corner of the intersection at Van Ry Boulevard and 236th Street Southwest. For over a year, city staff worked with Washington State Department of Transportation (WSDOT) representatives to complete a surplus process and acquire the land needed for project development. The overall design combines landscape, hardscape and artistic elements. Various types of seating will be available for transit users and community members alike. Central to the space, an art piece called "Together we Rise", will be installed (post construction), by Miguel Edwards, an artist selected by our community to complete a piece for the plaza.

A call for bids was published for three weeks in March and April. The City received 2 bids. Staff evaluated both bids and the apparent low bid from Always Active Services LLC in an amount of $1,927,000 was determined to be responsive and responsible.

Contractor	Bid Amount
Always Active Services LLC	$1,927,118.83
Granite Construction Company	$2,415,322.26

A combination of local and federal funds administered via Federal Highway Administration (FHWA), support construction of this project.

Financial/Budget Impacts:

Budget Amendment Required? Yes.

Budget and Sources: Grant Funds (Sound Transit, DEMO)	$2,366,000
Expenditure:	$2,575,000
New Appropriation Required + Sources: Parks CIP Fund	$209,000

Additional Financial Information:

Staff reviewed the bid submittals verifying the apparent low bidder, Always Active Services LLC, to be responsive and responsible with a total bid of $1,927,118.83. The bid amount is above the engineers estimate and above the estimated range for cost of construction ($1,500,000 - $1,800,000).

Project Expenditures include costs for construction, construction management services (inspection, administration and materials testing), staff time and contingencies to total $2,575,000.

The project is supported with grant funding from Sound Transit and federal earmarks - DEMO (FHWA) in an amount of $2,366,000. With the increased cost of construction, additional funding from Parks Capital Improvements Fund will provide an additional amount of $209,000 to fully

fund the project. A budget amendment will allocate these funds to the 2026 Transit Connection Corridor (TCCP) project budget.

Community Notifications:
City Council Agenda
If "Other," please specify:

Board/Commission Recommendation:
N/A.

Staff Recommendation:
Staff recommend City Council authorize the City Manager to execute the Local Agency Construction Contract (CDS 0815(007)) with Always Active Services LLC in a form reviewed and approved by legal council, in an amount of $1,927,118.83, with an approved budget not to exceed $2,120,000.00 for construction of the Transit Connection Corridor Project. This can be accomplished by adding it to the June 4, 2026 Consent Agenda.

Council Motion:
N/A

Attachments:
1. Bid Tab - Pedestrian Plaza (Transit Connection Corridor) Project
2. Contract - Pedestrian Plaza (Transit Connection Corridor) Project
3. Presentation for Pedestrian Plaza (Transit Connection Corridor) Project

Transit Connection Corridor Project (#10106624)
CDS0815(007)
Owner: City of Mountlake Terrace
Solicitor: Mountlake Terrace WA, City of
04/21/2026 02:00 PM PDT

FINAL

Line Item	Item Code	Item Description	UofM	Quantity	**Engineer Estimate**		**Always Active Services** 2014 171st Ave SE Snohomish, WA 98290		**Granite Construction** 1525 E Marine View Dr. Everett, WA 98201	
					Unit Price	Extension	Unit Price	Extension	Unit Price	Extension
1	Std 1-04.4	Minor Change	EST	1	15,000.00	15,000.00	$15,000.00	$15,000.00	$15,000.00	$15,000.00
2	SP 1-05.4	Roadway Surveying	LS	1	10,000.00	10,000.00	$15,000.00	$15,000.00	$12,000.00	$12,000.00
3	SP 1-05.4	Structure Surveying	LS	1	8,000.00	8,000.00	$20,000.00	$20,000.00	$9,000.00	$9,000.00
4	SP 1-05.18	Record Drawings (Min.Bid $5,000)	LS	1	5,000.00	5,000.00	$5,000.00	$5,000.00	$5,000.00	$5,000.00
5	Std 1-07.15	SPCC Plan	LS	1	1,000.00	1,000.00	$1,000.00	$1,000.00	$1,000.00	$1,000.00
6	Std 1-09.7	Mobilization	LS	1	135,000.00	135,000.00	$130,000.00	$130,000.00	$215,000.00	$215,000.00
7	SP 1-10	Traffic Control Supervisor	HR	380	120.00	45,600.00	$85.00	$32,300.00	$90.00	$34,200.00
8	Std 1-10	Flaggers	HR	480	80.00	38,400.00	$85.00	$40,800.00	$50.00	$24,000.00
9	Std 1-10	Other Temporary Traffic Control Devices	LS	1	6,000.00	6,000.00	$20,000.00	$20,000.00	$35,000.00	$35,000.00
10	Std 1-10	Construction Signs Class A	SF	22	50.00	1,100.00	$10.00	$220.00	$45.00	$990.00
11	Std 1-10.3(1)B	Other Traffic Control Labor	HR	240	80.00	19,200.00	$1.00	$240.00	$50.00	$12,000.00
12	SP 1-10	Uniformed Police Officer	HR	80	150.00	12,000.00	$140.00	$11,200.00	$130.00	$10,400.00
13	SP 2-01	Clearing and Grubbing	LS	1	10,000.00	10,000.00	$40,000.00	$40,000.00	$20,000.00	$20,000.00
14	SP 2-02	Removal of Structures and Obstructions	LS	1	10,000.00	10,000.00	$20,000.00	$20,000.00	$30,000.00	$30,000.00
15	SP 2-03	Roadway Excavation Incl. Haul	CY	15	200.00	3,000.00	$100.00	$1,500.00	$150.00	$2,250.00
16	SP 2-03	Gravel Borrow Incl. Haul	TON	880	50.00	44,000.00	$55.00	$48,400.00	$65.00	$57,200.00
17	Std 2-09	Shoring or Extra Excavation Class A	LS	1	25,000.00	25,000.00	$1,000.00	$1,000.00	$30,000.00	$30,000.00
18	SP 4-04	Crushed Surfacing Top Course	TON	120	80.00	9,600.00	$60.00	$7,200.00	$200.00	$24,000.00
19	SP 4-04	Crushed Surfacing Base Course	TON	20	80.00	1,600.00	$60.00	$1,200.00	$200.00	$4,000.00
20	SP 5-04	HMA Cl. 1/2-inch PG 58H-22	TON	2	1,000.00	2,000.00	$1,000.00	$2,000.00	$1,200.00	$2,400.00
21	SP 5-04	Planing Bituminous Pavement	SY	10	250.00	2,500.00	$200.00	$2,000.00	$150.00	$1,500.00
22	SP 6-02	Moment Slab	SY	73	750.00	54,750.00	$720.00	$52,560.00	$1,200.00	$87,600.00
23	SP 6-06	Railing Type 1	LF	100	365.00	36,500.00	$870.00	$87,000.00	$510.00	$51,000.00
24	SP 6-06	Railing Type 2	LF	118	360.00	42,480.00	$890.00	$105,020.00	$550.00	$64,900.00
25	SP 6-06	Railing Type 3	LF	24	260.00	6,240.00	$600.00	$14,400.00	$490.00	$11,760.00
26	SP 6-06	Railing Type 4	LF	32	200.00	6,400.00	$410.00	$13,120.00	$275.00	$8,800.00
27	SP 6-11	Reinforced Concrete Wall 1	SF	580	250.00	145,000.00	$295.00	$171,100.00	$350.00	$203,000.00
28	SP 6-11	Reinforced Concrete Wall 2	SF	280	180.00	50,400.00	$295.00	$82,600.00	$350.00	$98,000.00
29	SP 6-13	Structural Earth Wall 3	SF	1210	190.00	229,900.00	$275.00	$332,750.00	$350.00	$423,500.00
30	SP 7-04	Solid Wall PVC Storm Sewer Pipe (SDR 35) 6 In. Diam.	LF	105	100.00	10,500.00	$18.00	$1,890.00	$85.00	$8,925.00
31	SP 7-04	Solid Wall PVC Storm Sewer Pipe (SDR 35) 8 In. Diam.	LF	10	175.00	1,750.00	$80.00	$800.00	$170.00	$1,700.00
32	SP 7-04	Ductile Iron Storm Sewer Pipe 8 In. Diam.	LF	41	200.00	8,200.00	$175.00	$7,175.00	$140.00	$5,740.00
33	SP 7-05	Catch Basin Type 1	EA	1	3,000.00	3,000.00	$3,500.00	$3,500.00	$3,000.00	$3,000.00
34	SP 7-05	12" Catch Basin with Decorative Grate	EA	7	1,500.00	10,500.00	$1,200.00	$8,400.00	$2,800.00	$19,600.00
35	SP 7-05	Adjust Utility Cover	EA	2	500.00	1,000.00	$750.00	$1,500.00	$930.00	$1,860.00
36	Std 8-01	Erosion/Water Pollution Control	EST	1	8,000.00	8,000.00	$8,000.00	$8,000.00	$8,000.00	$8,000.00
37	Std 8-01	Inlet Protection	EA	10	120.00	1,200.00	$50.00	$500.00	$180.00	$1,800.00
38	Std 8-01	High Visibility Silt Fence	LF	220	15.00	3,300.00	$10.00	$2,200.00	$14.00	$3,080.00
39	Std 8-02	PSIPE Acer X Freemanii 'Jeffersred'/Autumn Blaze Maple (2 1/2" Cal.)	EA	1	300.00	300.00	$1,000.00	$1,000.00	$700.00	$700.00
40	Std 8-02	PSIPE Ginkgo Biloba "Blagon"/Gold Spire Ginkgo (2 1/2" Cal.)	EA	4	300.00	1,200.00	$1,500.00	$6,000.00	$725.00	$2,900.00
41	Std 8-02	PSIPE Azalea Girard Hybrid 'Girard' S Fuchsia/Girard Azalea (2 Gal.)	EA	14	30.00	420.00	$50.00	$700.00	$40.00	$560.00
42	Std 8-02	PSIPE Azalea X 'Hino Crimson'/Hino Crimson Azalea (2 Gal.)	EA	7	30.00	210.00	$50.00	$350.00	$40.00	$280.00
43	Std 8-02	PSIPE Calluna Vulgaris 'Red Fred'/Red Fred Heather (1 Gal.)	EA	24	16.00	384.00	$30.00	$720.00	$21.00	$504.00
44	Std 8-02	PSIPE Calluna Vulgaris 'Spring Torch'/Scotch Heather (1 Gal.)	EA	24	16.00	384.00	$25.00	$600.00	$18.00	$432.00
45	Std 8-02	PSIPE Calluna Vulgaris 'Yellow Beauty'/Heather (1 Gal.)	EA	9	16.00	144.00	$25.00	$225.00	$18.00	$162.00
46	Std 8-02	PSIPE Chameacyparis Obtusa 'Nana Gracilis'/Dwarf Hinoki Cypress (3 Gal.)	EA	2	35.00	70.00	$50.00	$100.00	$110.00	$220.00
47	Std 8-02	PSIPE Erica Carnea 'Springwood White'/White Spring Heather (1 Gal.)	EA	20	16.00	320.00	$25.00	$500.00	$18.00	$360.00
48	Std 8-02	PSIPE Kalmia Latifolia 'Minuet'/Minuet Mountain Laurel (2 Gal.)	EA	55	30.00	1,650.00	$40.00	$2,200.00	$55.00	$3,025.00
49	Std 8-02	PSIPE Pieris Japonica 'Cavatine'/Dwarf Lily of the Valley Bush (2 Gal.)	EA	22	30.00	660.00	$40.00	$880.00	$27.00	$594.00
50	Std 8-02	PSIPE Pinus Strobus 'Blue Shag'/Blue Shag White Pine (5 Gal.)	EA	1	50.00	50.00	$150.00	$150.00	$140.00	$140.00
51	Std 8-02	PSIPE Rhododendron X 'Pjm Compacta'/ Pjm Compact Rhododendron (5 Gal.)	EA	5	45.00	225.00	$150.00	$750.00	$60.00	$300.00
52	Std 8-02	PSIPE Sarcococca Confusa/Sweetbox (2 Gal.)	EA	18	30.00	540.00	$40.00	$720.00	$40.00	$720.00
53	Std 8-02	PSIPE Viburnum Davidii/David Viburnum (2 Gal.)	EA	6	30.00	180.00	$35.00	$210.00	$25.00	$150.00
54	SP 8-02	Topsoil Type A	CY	75	80.00	6,000.00	$80.00	$6,000.00	$90.00	$6,750.00
55	SP 8-02	Landscape Mulch	CY	10	75.00	750.00	$100.00	$1,000.00	$130.00	$1,300.00
56	SP 8-02	Tree Planting with Tree Grate	EA	2	3,500.00	7,000.00	$5,000.00	$10,000.00	$1,020.00	$2,040.00
57	SP 8-02	TCE Area Restoration	SF	3000	10.00	30,000.00	$3.00	$9,000.00	$1.50	$4,500.00
58	SP 8-03	Plaza Irrigation System	LS	1	15,000.00	15,000.00	$16,000.00	$16,000.00	$13,000.00	$13,000.00
59	Std 8-04	Cement Conc. Traffic Curb and Gutter	LF	10	65.00	650.00	$80.00	$800.00	$370.00	$3,700.00
60	Std 8-04	Cement Conc. Pedestrian Curb	LF	45	50.00	2,250.00	$80.00	$3,600.00	$100.00	$4,500.00
61	SP 8-12	Temporary Security Fence	LF	195	40.00	7,800.00	$50.00	$9,750.00	$6.00	$1,170.00
62	Std 8-14	Cement Conc. Sidewalk	SY	120	100.00	12,000.00	$165.00	$19,800.00	$270.00	$32,400.00
63	SP 8-14	Cement Conc. Plaza Paving (Sand Finish)	SY	220	220.00	48,400.00	$175.00	$38,500.00	$250.00	$55,000.00
64	SP 8-19	Foothills River Rock, Washed	TON	12	120.00	1,440.00	$600.00	$7,200.00	$300.00	$3,600.00
65	SP 8-20	Illumination System (Complete)	LS	1	90,000.00	90,000.00	$62,000.00	$62,000.00	$75,000.00	$75,000.00
66	SP 8-32	Mountlake Terrace Plaza Lighted Sign	LS	1	25,000.00	25,000.00	$15,000.00	$15,000.00	$33,000.00	$33,000.00
67	SP 8-32	Bronze Plate Inlay	EA	1	10,000.00	10,000.00	$2,500.00	$2,500.00	$8,000.00	$8,000.00
68	SP 8-32	Wayfinding Sign	EA	1	3,500.00	3,500.00	$3,500.00	$3,500.00	$3,600.00	$3,600.00
69	SP 8-32	Precast Concrete Benches	LS	1	70,000.00	70,000.00	$120,000.00	$120,000.00	$160,000.00	$160,000.00
70	SP 8-32	Arc Benches	LS	1	41,000.00	41,000.00	$32,000.00	$32,000.00	$27,000.00	$27,000.00
71	SP 8-32	Granite Wall Caps and Column Tops	LS	1	60,000.00	60,000.00	$42,000.00	$42,000.00	$140,000.00	$140,000.00
72	SP 8-32	Granite Filler Blocks	LS	1	20,000.00	20,000.00	$5,200.00	$5,200.00	$35,000.00	$35,000.00
73	SP 8-32	Art Sculpture Foundation	LS	1	15,000.00	15,000.00	$18,000.00	$18,000.00	$18,000.00	$18,000.00
74	74	WA State Sales Tax @ 10.5% (Rule 170)	LS	1	158,000.00	158,000.00	$183,588.83	$183,588.83	$229,510.26	$229,510.26
		Base Bid Total				**$1,653,647.00**		**$1,927,118.83**		**$2,415,322.26**

David M. Paul

Digitally signed by David M. Paul
Date: 2026.04.22 11:53:06-07'00'

Transit Connection Corridor Project
Federal No. CDS 0815(007)

Funding Partners: Federal Highway Administration

March 2026

Recreation and Parks Department
Mountlake Terrace
23204 58th Ave West
Mountlake Terrace, WA 98043
425-776-1161

Transit Connection Corridor Project
Federal No. CDS 0815(007)

Funding Partners: Federal Highway Administration

City of Mountlake Terrace
Snohomish County, Washington

Council Members

Steve Woodard, Mayor
Bryan Wahl, Mayor Pro Tem
Sam Doyle
Kyoko Matsumoto Wright
William L. Paige Jr.
Laura Sonmore
Erin Murray

City Manager

Jeff Niten

City Hall

23204 58th Ave West
Mountlake Terrace, WA 98043

Washington State Department of Transportation

Local Agency Contract

THIS AGREEMENT, made and entered into this _____ day of _____, _____.

between _____ under and by virtue of Title 47 RCW, as amended and

hereinafter called the Contractor.

WITNESSETH:

That in consideration of the terms and conditions contained herein and attached and made a part of this agreement, the parties hereto covenant and agree as follows:

I. The Contractor shall do all work and furnish all tools, materials, and equipment for:

in accordance with and as described in the attached plans and specifications, and the standard specifications of the which are by this reference incorporated herein and made part hereof and, shall perform any changes in the work in accord with the Contract Documents.

The Contractor shall provide and bear the expense of all equipment, work and labor, of any sort whatsoever that may be required for the transfer of materials and for constructing and completing the work provided for in these Contract Documents except those items mentioned therein to be furnished by _____.
Agency

II. _____ hereby promises and agrees with the Contractor to employ, and does employ
Contractor
the Contractor to provide the materials and to do and cause to be done the above described work and to complete and finish the same in accord with the attached plans and specifications and the terms and conditions herein contained and hereby contracts to pay for the same according to the attached specifications and the schedule of unit or itemized prices at the time and in the manner and upon the conditions provided for in this contract.

III. The Contractor for itself, and for its successors, and assigns, does hereby agree to full performance of all convenants required of the Contractor in the contract.

IV. It is further provided that no liability shall attach to the Contracting Agency by reason of entering into this contract, except as provided herein.

IN WITNESS WHEREOF, the Contractor has executed this instrument, on the day and year first below written and has caused this instrument to be executed by and in the name of _____ the day and year first above written.
Contractor

Contractor:

_____

_____

Contractor Authorized Signers Signature

_____

Contractor Authorized Signers Name and Position

_____

Date

ACCEPTED AND APPROVED BY:

Local Agency:

Transit Connection Corridor CDS0815(007)

_____

Local Agency Authorized Signers Signature

_____

Local Agency Authorized Name and Position

_____

Date

PUBLIC WORKS PERFORMANCE BOND

to __City of Mountlake Terrace___, WA

Bond No. _____

__City of Mountlake Terrace_____, Washington, (_Owner_) has awarded to _____ (Principal), a Contract for the construction of the project designated as _Transit Connection Corridor_, Project No. _CDS 0815(007)__, in ____Mountlake Terrace___, Washington (Contract), and said Principal is required under the terms of that Contract to furnish a bond for performance of all obligations under the Contract.

The Principal, and _____ (Surety), a corporation organized under the laws of the State of _____ and licensed to do business in the State of Washington as surety and named in the current list of "Surety Companies Acceptable in Federal Bonds" as published in the Federal Register by the Audit Staff Bureau of Accounts, U.S. Treasury Dept., are jointly and severally held and firmly bound to the _____, in the sum of _____ US Dollars ($_____) Total Contract Amount, subject to the provisions herein.

This statutory performance bond shall become null and void, if and when the Principal, its heirs, executors, administrators, successors, or assigns shall well and faithfully perform all of the Principal's obligations under the Contract and fulfill all the terms and conditions of all duly authorized modifications, additions, and changes to said Contract that may hereafter be made, at the time and in the manner therein specified; and if such performance obligations have not been fulfilled, this bond shall remain in full force and effect.

The Surety agrees to indemnify, defend, and protect the _____ against any claim of direct or indirect loss resulting from the failure of the Principal, its heirs, executors, administrators, successors, or assigns (or any of the employees, subcontractors, or lower tier subcontractors of the Principal) to faithfully perform the Contract.

The Surety for value received agrees that no change, extension of time, alteration or addition to the terms of the Contract, the specifications accompanying the Contract, or to the work to be performed under the Contract shall in any way affect its obligation on this bond, and waives notice of any change, extension of time, alteration or addition to the terms of the Contract or the work performed. The Surety agrees that modifications and changes to the terms and conditions of the Contract that increase the total amount to be paid the Principal shall automatically increase the obligation of the Surety on this bond and notice to Surety is not required for such increased obligation.

This bond may be executed in two (2) original counterparts, and shall be signed by the parties' duly authorized officers. This bond will only be accepted if it is accompanied by a fully executed and original power of attorney for the officer executing on behalf of the surety.

The Surety agrees to be bound by the laws of the state of Washington and subjected to the jurisdiction of the state of Washington.

PRINCIPAL	SURETY
_____	_____
Principal Signature Date	Surety Signature Date
_____	_____
Printed Name	Printed Name
_____	_____
Title	Title

Local office/agent of Surety Company:

Name _____ Telephone _____

Address _____

PUBLIC WORKS PAYMENT BOND

to _____City of Mountlake Terrace____, WA

Bond No. _____

_____City of Mountlake Terrace_____, Washington, (_Owner_____) has awarded to _____ (Principal), a Contract for the construction of the project designated as ____Transit Connection Corridor _____, Project No. _CDS 0815(007)___, in ____Mountlake Terrace____, Washington (Contract), and said Principal is required under the terms of that Contract to furnish a payment bond in accord with Title 39.08 Revised Code of Washington (RCW) and (where applicable) 60.28 RCW.

The Principal and _____ (Surety), a corporation organized under the laws of the State of _____ and licensed to do business in the State of Washington as surety and named in the current list of "Surety Companies Acceptable in Federal Bonds" as published in the Federal Register by the Audit Staff Bureau of Accounts, U.S. Treasury Dept., are jointly and severally held and firmly bound to _____, in the sum of _____ US Dollars ($_____) Total Contract Amount, subject to the provisions herein.

This statutory payment bond shall become null and void, if and when the Principal, its heirs, executors, administrators, successors, or assigns shall pay all persons in accordance with RCW Titles 60.28, 39.08, and 39.12 including all workers, laborers, mechanics, subcontractors, lower tier subcontractors, and material suppliers, and all persons who shall supply such contractor or subcontractor with provisions and supplies for the carrying on of such work, and all taxes incurred on said Contract under Title 50 and 51 RCW and all taxes imposed on the Principal under Title 82 RCW; and if such payment obligations have not been fulfilled, this bond shall remain in full force and effect.

The Surety agrees to indemnify, defend, and protect the _____ against any claim of direct or indirect loss resulting from the failure of the Principal, its heirs, executors, administrators, successors, or assigns, (or the subcontractors or lower tier subcontractors of the Principal) to pay all laborers, mechanics, subcontractors, lower tier subcontractors materialpersons, and all persons who shall supply such contractor or subcontractors with provisions and supplies for the carrying on of such work.

The Surety for value received agrees that no change, extension of time, alteration or addition to the terms of the Contract, the specifications accompanying the Contract, or to the work to be performed under the Contract shall in any way affect its obligation on this bond, except as provided herein, and waives notice of any change, extension of time, alteration or addition to the terms of the Contract or the work performed. The Surety agrees that modifications and changes to the terms and conditions of the Contract that increase the total amount to be paid the Principal shall automatically increase the obligation of the Surety on this bond and notice to Surety is not required for such increased obligation.

This bond may be executed in two (2) original counterparts, and shall be signed by the parties' duly authorized officers. This bond will only be accepted if it is accompanied by a fully executed and original power of attorney for the officer executing on behalf of the surety.

The Surety agrees to be bound by the laws of the state of Washington and subjected to the jurisdiction of the state of Washington.

PRINCIPAL		SURETY	
_____		_____	
Principal Signature	Date	Surety Signature	Date
_____		_____	
Printed Name		Printed Name	
_____		_____	
Title		Title	

Local office/agent of Surety Company:

Name _____ Telephone _____

Address _____

CONTRACTOR'S AUTHORIZED SIGNATURES

Transit Connection Corridor Project
Project No. C2202
FA No: CDS-0815(007)

List the names and title of those individuals in your organization who are authorized to executed proposals, contracts, bonds, and other documents and/or instruments on behalf of the organization. Specify if more than signature is required.

NAME	SIGNATURE	TITLE

The undersigned, being duly sworn, deposes and says that the foregoing is a true statement of facts concerning the individual, corporation, co-partnership or joint venture herein name, as of the date indicated:

_____
Name of Firm (Be Exact)

Sworn to before me this _____ Day of _____, 202__

Seal

_____
Authorized Signature (s)

_____
Notary Public

_____
Name of Authorized Signature

City of Mountlake Terrace

Transit Connection Corridor Project
Federal No. CDS 0815(007)

CONTRACT PROVISIONS

City Hall
23204 58th Ave West
Mountlake Terrace, WA 98043
425-776-1161

CERTIFICATION

Transit Connection Corridor Project

Federal No. CDS 0815(007)

The engineering material and data contained in these contract documents were prepared under the supervision and direction of the undersigned, whose seal as registered professional engineer is affixed below.

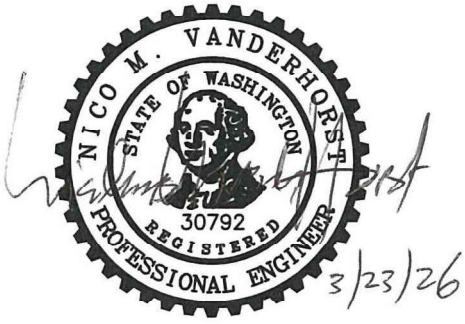

Nico M. Vanderhorst, P.E.
Principal
OTAK, Inc.

Approved for Construction:

David M. Paul

Digitally signed by David M. Paul
Date: 2026.03.26 15:53:23-07'00'

David M. Paul, P.E.
City Engineer – Interim
City of Mountlake Terrace

TABLE OF CONTENTS

Call for Bids……LD - 8

Instructions to Bidders……LD - 10

Bidders Checklist……LD -15

PART I – LEGAL DOCUMENTS

Bid Proposal ……LD -18

Proposal Bond……..LD -24

Subcontractor List……LD-25

Non-Collusion Declaration……..LD-26

Local Agency Certification for Federal-Aid Contracts……....LD-27

Certification of Compliance with Wage Payment Statutes……..LD-28

Bidder Questionnaire……LD-29

CONTRACT FORMS

Contract……LD-31

Performance Bond……LD-33

Payment Bond……..LD-34

Contractors Authorized Signature Form……..LD-35

PART II – REQUIRED FEDERAL AID CONTRACT PROVISIONS

Federal Aid Contract Provisions

PART III – SPECIAL PROVISIONS

Introduction to the Special Provisions……SP-1

Division 1 – General Requirements…….SP-2

Division 2 – Earthwork……SP-73

Division 3 – Aggregate Production and Acceptance……..SP-80

Division 4 – Bases……..SP-81

Division 5 – Surface Treatments and Pavements……...SP-82

Division 6 – Structures……...SP-112

Division 7 – Drainage Structures, Storm Sewers,
Sanitary Sewers, Water Mains and Conduits…….SP-122

Division 8 – Miscellaneous……SP-127

Division 9 – Materials……SP-139

PART IV – Appendices

APPENDIX A – State Prevailing Wage Rates

APPENDIX B – Federal Wage Rates

APPENDIX C – Construction Plans

APPENDIX D – FSBE Goal

APPENDIX E – Inadvertent Discovery Plan

APPENDIX F – Geotechnical Information

APPENDIX G – Permits

APPENDIX H – Traffic Control Plan

APPENDIX I – Potential Staging Area

VICINITY MAP

City of Mountlake Terrace

Transit Connection Corridor Project

Federal No. CDS 0815(007)

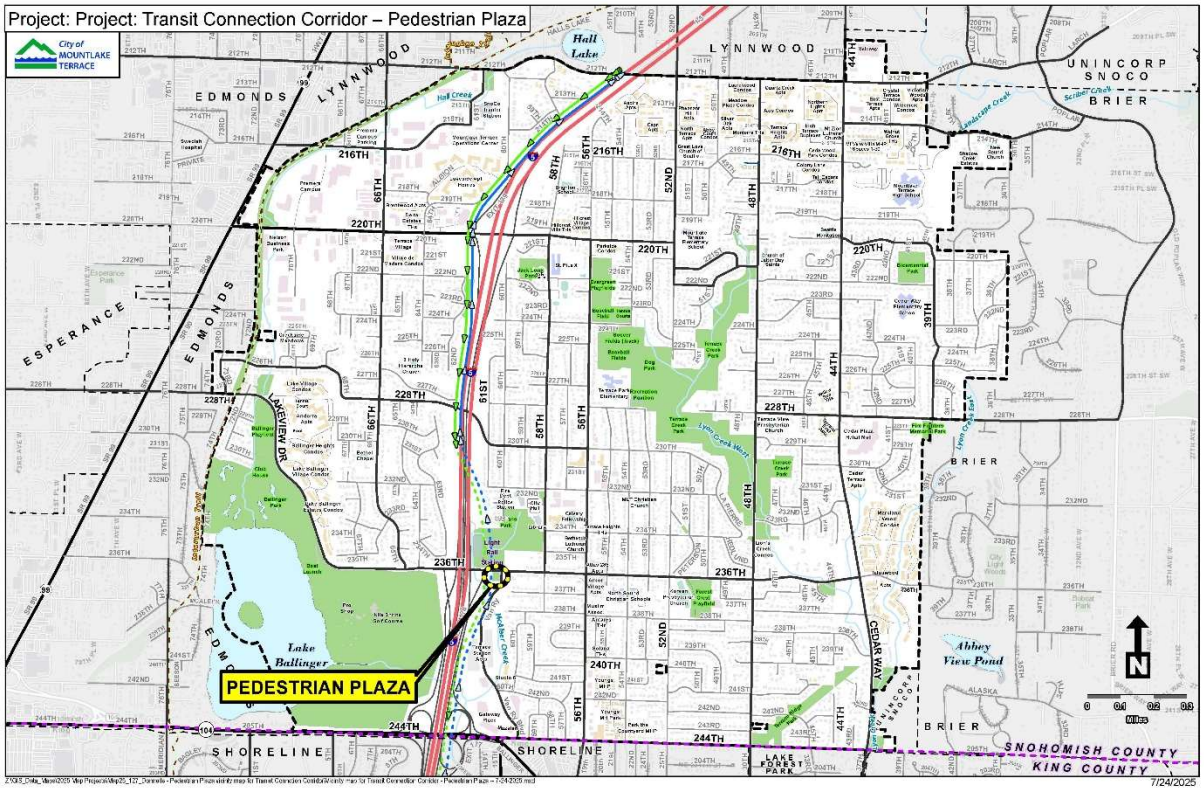

Address: 6100 236th ST SW
Mountlake Terrace, WA 98043

LD-7

INVITATION/CALL FOR BIDS

City of Mountlake Terrace
Transit Connection Corridor Project
Federal No. CDS 0815(007)
Solicitation Date: March 31, 2026

The City of Mountlake Terrace will receive and accept sealed bids for this solicitation through QuestCDN.com via their VirtuBid online bid service or at the Permitting counter located at City Hall, 23204 58th Ave West, Mountlake Terrace, WA 98043. Bids will be received until 2:00 p.m., Pacific Time, on Tuesday, April 21, 2026. Bids received will be opened and read aloud during a virtual public bid opening, to be held at the day and time of the bid closing utilizing video conference as detailed in the Bidder's Instructions.

A non-mandatory prebid walkthrough is scheduled for April 14, 2026 at 1 p.m. Interested bidders should meet on the sidewalk at the southwest corner of 236th St SW and Van Ry Blvd. intersection. Questions or clarifications regarding this Invitation for Bid must be received by 3:00 p.m. on April 15, 2026.

This project is supported with federal funding from Federal Highways Administration. The project involves construction of a landscaped pedestrian plaza. Primary elements of construction include TESC, site excavation and grading, structural earth wall (incorporating both soil and lightweight (geofoam - backfill), storm drainage collection, reinforced concrete retaining walls, pedestrian seating, decorative (granite) wall caps, decorative concrete site paving and jointing, pedestrian railings, site lighting, signage, landscaping and irrigation. The FSBE goal for this project is 13%. There is no federal training goal for this project.

The estimated cost of construction is between $1,500,000 – $1,800,000. All contractors must be licensed in the State of Washington to conduct business.

The Contract Documents, including plans and specifications, may be viewed at no cost on the City's website at www.cityofmlt.com/bids.aspx, www.bxwa.com and on QuestCDN's website at www.questcdn.com (using ebidDoc #10106624). Printed plans may also be obtained from the City's Engineering Department upon a non-refundable payment of $600 per set. Project bid documents may be downloaded from QuestCDN at a cost of $42,00, which will add the Bidder to the Plan Holders List and allow access to the online bidding portal for submittal of your bid. Registering as a plan holder on QuestCDN is recommended for all prime and subcontractors as only Plan Holders will receive notices of addenda and other updates. For assistance in registering, contact QuestCDN customer support at 952-233-1632 or at info@questcdn.com. Bidders may also register as a Plan Holder by emailing ddayao@mltwa.gov.

Free-of-charge access to project bid documents (plans, specifications, addenda, and Bidders List) is provided to Prime Bidders, Subcontractors, and Vendors by going to www.bxwa.com and clicking on "Posted Projects", "Public Works", "City of Mountlake Terrace", and "Projects Bidding". This online plan room provides Bidders with fully usable online documents with the

Document Ref: EAVBA-YNTX8-2GRD4-XRXYR

ability to: download, view, print, order full/partial plan sets from numerous reprographic sources, and a free online digitizer/take-off tool. It is recommended that Bidders "Register" to receive automatic e-mail notification of future addenda and to place themselves on the "Self-Registered Bidders List". Bidders that do not register will not be automatically notified of addenda and will need to periodically check the on-line plan room for addenda issued on this project. Contact Builders Exchange of Washington at (425) 258-1303 should you require assistance with access or registration. The content available through bxwa.com is our property or the property of our licensors and is protected by copyright and other intellectual property laws. Access to project documents is intended for use by bidders (general contractors/prime bidders, subcontractors and suppliers), agency personnel and agency's consultants, as well as for personal, noncommercial, use by the public. You may display or print the content available for these uses only. "Harvesting" (downloading, copying, and transmitting) of any project information and/or project documents for purposes of reselling and/or redistributing information by any other party is not allowed by BXWA.

Bid proposals shall be accompanied by a 5% bid proposal deposit as detailed in the Bidder's Instructions. Should the successful bidder fail to enter into such contract and furnish satisfactory performance bond within the time stated in the specifications, the bid proposal deposit shall be forfeited to the City of Mountlake Terrace.

The City retains the right to reject any and all bids and to waive informalities and minor irregularities in the bidding process.

"The City of Mountlake Terrace, in accordance with the provisions of Title VI of the Civil Rights Act of 1964 (78 Stat. 252, 42 U.S.C. 2000d to 2000d-4) and the Regulations, hereby notifies all bidders that it will affirmatively ensure that in any contract entered into pursuant to this advertisement, disadvantaged business enterprises will be afforded full and fair opportunity to submit bids in response to this invitation and will not be discriminated against on the grounds of race, color, or national origin in consideration for an award."

The City of Mountlake Terrace is an Equal Opportunity Affirmative Action Employer.

Jeff Niten

Jeff Niten, City Manager

Publication: Seattle Daily Journal of Commerce – 3/31/26, 4/7/26 and 4/14/26

Everett Herald – 3/31/26, 4/7/26 and 4/14/26

Document Ref: EAVBA-YNTX8-2GRD4-XRXYR

INSTRUCTIONS TO BIDDERS

City of Mountlake Terrace
Transit Connection Corridor Project
Federal No. CDS 0815(007)
(QuestCDN ebidDOc # 10106624)

Note: The intent of these instructions is to offer additional details to the Standard Specifications and Special Provisions.

Project Location

The project is located on the SW corner at the intersection of 236th St SW and Van Ry Boulevard. Address 6100 236th St SW, Mountlake Terrace, WA 98043, as identified on the plans, specifications and vicinity map.

Prevailing Wages

The State of Washington prevailing wage requirements (RCW 39.12) apply. The Contractor is required to pay the applicable prevailing wage rates in effect upon April 21, 2026, the Bid Due Date, which shall remain in effect for the duration of the Contract. The prevailing wage rates lookup page is located at https://secure.lni.wa.gov/wagelookup/rates/journey-level-rates (select Snohomish County and use the bid due date as the effective date). A copy of the applicable wage rates is provided in
Appendix A & B.

The City of Mountlake Terrace does not imply or warrant that the Contractor will find labor available at those rates. The Contractor is required to file a Statement of Intent to Pay Prevailing Wages (Intent) and an Affidavit of Wages Paid (Affidavit) form for each job with Labor & Industries. Additionally, Federal wage laws and rules apply. The hourly minimum rates for wages and fringe benefits identified by the U.S. Department of Labor's Wage Determination WA20260001 are included as Appendix B. Ten (10) days before the Bid Due Date, the City of Mountlake Terrace will review the Davis Bacon Wage Determination to ensure that the wage rates have not changed. If the rates have changed, the new rates will be sent out in an Addendum. Reference 1-07.9 for additional requirements.

Plans and Provisions

The Contract Documents, including plans and specifications, may be viewed at no cost on the City's website at www.cityofmlt.com/bids.aspx and on QuestCDN's website at www.questcdn.com, using ebidDoc #10106624 before deciding to become a Plan Holder. Printed plans may also be obtained from the City's Engineering Department upon a non-refundable payment of $600 per set.

Free-of-charge access to project bid documents (plans, specifications, addenda, and Bidders List) is provided to Prime Bidders, Subcontractors, and Vendors by going to www.bxwa.com and clicking on "Posted Projects", "Public Works", "City of Mountlake Terrace", and "Projects Bidding". This online plan room provides Bidders with fully usable online documents with the ability to: download, view, print, order full/partial plan sets from numerous reprographic sources, and a free online digitizer/take-off tool. It is recommended that Bidders "Register" to receive automatic e-mail notification of future addenda and to place themselves on the "Self-Registered Bidders List". Bidders that do not register will not be automatically notified of addenda and will need to periodically check the on-line plan room for addenda issued on this project. Contact Builders Exchange of Washington at (425) 258-1303 should you require assistance with access or registration. The content available through bxwa.com is our property or the property of our licensors and is protected by copyright and other intellectual property laws. Access to project documents is intended for use by bidders (general contractors/prime bidders, subcontractors and suppliers), agency personnel and agency's consultants, as well as for personal, noncommercial, use by the public. You may display or print the content available for these uses only. "Harvesting" (downloading, copying, and transmitting) of any project information and/or project documents for purposes of reselling and/or redistributing information by any other party is not allowed by BXWA.

Plan Holders and Bid Documents

To be considered a Plan Holder for bids, a contractor may register at no cost with QuestCDN.com or email ddayao@mltwa.gov. Contract documents can be viewed in digital form on the City's website or purchased for a non-refundable download fee of $42.00 via QuestCDN (for online bidding).

Only registered Plan Holders will receive notices of addenda and other updates.

For online bid submittals (via QuestCDN), it is strongly advised that you complete the registration process and become familiar with the electronic bidding platform well in advance of the bid proposal due date. Contact QuestCDN customer support at 952-233-1632 or at info@questcdn.com, for assistance with registration, downloading, online bidding, or working with digital bid documents.

Proposals

Sealed Bids shall be accepted via two methods:

- QuestCDN's VirtuBid (online electronic bid service), using eBidDoc#10106624

  or

- Delivered in a sealed envelope to the Permitting counter at:
  City Hall 23204 58th Ave W.
  Mountlake Terrace, Washington 98043.
  Attn: Donnelle Dayao.

Prospective bidders must be registered as a Plan Holder in order to submit a bid.

To access the electronic bid worksheets and forms, download the project documents. For online bidding, click the online bid button on the bid advertisement page, using QuestCDN ebidDoc #10106624.

Bidders must enter their bid unit prices, as well as enter the amount to be paid in state taxes on the line specified, using **only** the online Bidders Worksheet. Do not change the Unit Prices that have been entered by the City. All additional required bid forms shall be submitted using the forms provided in the bid document.

Sealed bids must be completed and submitted, all addenda acknowledged, all other acknowledgements completed, and required forms signed and uploaded to the QuestCDN Virtual bid site or submitted in a sealed envelope at the Permitting counter of City Hall, in order to submit a complete bid.

Bid proposals will only be received until 2:00 p.m. PST on Tuesday, April 21, 2026.

Bid Proposal Deposit

As a guarantee of good faith and as required by law, each bid shall be accompanied by a bid proposal deposit in the form of a certified check, cashier's check, or surety bond, payable without condition to the City of Mountlake Terrace, for an amount not less than five (5) percent of the total amount of bid. Cash will not be accepted.

Deposits of the three low bidders will be retained until a contract has been entered into between the successful bidder and the City of Mountlake Terrace and until a performance and payment bond in an amount of 100 percent of the contract price has been filed as required under these contract documents.

The following options are available for submission of bid proposal deposits; Bidders utilize ONLY one option:

> Surety2000 Bid Bonds – Bidders (and their Surety) register with Surety2000 to get their Contractor and Bond identification number. Bidders enter these numbers in the Bid Bond section on the QuestCDN VirtuBid site. When using this method, bidders do not need to provide physical bonds to the City. Bidders submitting a sealed envelope, need to provide a physical copy of the bond with the Surety2000 bond number.
>
> Electronic Bid Bonds – Bidders will download the Bid Bond form provided on the bid site, then upload the completed form to the QuestCDN VirtuBid or submit a physical copy in their sealed envelope.
>
> Certified or Cashier's Check – must be provided to the City Clerk in a sealed envelope

clearly marked with “Sealed Bid-Transit Connection Corridor Project CDS 0815(007)” before the bid opening. Postmarks with date and time stamps evidencing it was posted prior to the bid opening are acceptable. For in-person delivery, City Hall offices are open to the public 8:00am. to 5:00pm, Monday through Friday. Drop box usage is not permitted. It is the sole responsibility of the Bidder to ensure their bid deposit is received on time whether sent by mail or in-person delivery.

Public Bid Opening

MLTZoom2 Meeting is inviting you to a scheduled Zoom meeting.

Topic: Transit Connection Corridor - Bid Opening

Time: Apr 21, 2026 02:00 PM Pacific Time (US and Canada)

Join Zoom Meeting

https://us02web.zoom.us/j/84779319095?pwd=Tn6ayPVe5OzFbQdRb4k3ZrJgrqKnug.1

Meeting ID: 847 7931 9095

Passcode: 331379

-

One tap mobile

+12532158782,,84779319095#,,,,*331379# US (Tacoma)

+12532050468,,84779319095#,,,,*331379# US

Join instructions

https://us02web.zoom.us/meetings/84779319095/invitations?signature=neF6w4qcgDNAp_nBjVlS3obhzFVu3b125Nsr4Bdsse8

Award of Contract

This contract will be awarded in accordance with the contract specifications.

Completion Time

Contract time shall begin 10 calendar days after the building permit for the Structural Earthen Wall is issued, or 90 calendar days after the Notice to Proceed date, whichever comes first. The

project shall be physically completed within (85) working days. See sections 1-08.4 and 1-08.5 of the Special Provisions for more comprehensive information.

Questions and Contacts

Questions or clarifications regarding this Invitation for Bid must be received before 3:00 p.m. on April 15, 2026. Questions may be submitted directly on the QuestCDN VirtuBid website, or submitted to the City's Parks Project Manager by email at ddayao@mltwa.gov, or by phone 425-744-6286. All questions will be responded to via the contact information provided on the plan holders list.

BIDDERS CHECKLIST

City of Mountlake Terrace
Transit Connection Corridor Project
Federal No. CDS 0815(007)
(QuestCDN ebidDoc # 10106624)

Bidder Forms:

The Bidder's attention is especially called to the following forms, which must be executed in full as required and submitted with their bid. These forms are available on the city's website or QuestCDN bidding site for your use.

Bid Proposal Form: The Bid Proposal Form must be filled in and signed by Bidder and then uploaded to the online bidding platform or via sealed bid at the Permitting counter at City Hall 23204 58th Ave W. Mountlake Terrace, WA 98043.

For online bidding, the unit prices must be shown in the space provided in the csv tabulation provided on the online bidding platform (excel/csv file).

Bid Proposal Bond: WSDOT Form 272-001A (07/2011): This form is to be executed by the Bidder and the Surety Company unless the bid deposit is submitted via Surety2000 or by certified check or cashier's check. The amount of this bond shall be not less than five percent (5%) of the total amount of bid and may be shown in dollars or on a percentage basis. To be executed and submitted with bid.

Subcontractor List – WSDOT Form 271-015LP (06/2020): To be filled out and submitted. If there are no subcontractors, write "none" on the first line of the form.

Non – Collusion Declaration – WSDOT Form 272-036I (07/2011): To be submitted with bid.

Certification for Federal Aid Contracts – WSDOT Form 272-040A (07/2011): To be submitted with bid.

Wage Law Compliance Form – Mountlake Terrace Form: To be filled out and submitted with bid.

Bidder Questionnaire Form – WSDOT Form 272-022 (11/2025): To be filled out and submitted with bid.

Successful Bidder Forms:

Following Contract award, the following forms are to be executed and returned to the City via email within 10 calendar days after the date of contract award. These documents shall be provided to the City's Parks Project Manager by email at ddayao@mltwa.gov.

Contract – WSDOT Form 272-006LP (03/2025): To be executed by successful Bidder with secure electronic signature via City- hosted software. Contractor to provide name, title and email address of the contract signatory within 3 days of award.

Performance Bond – WSDOT Form 272-002A (12/2019): To be executed by the successful Bidder and Surety Company. Email a copy to the Parks Project Manager and mail the original.

Payment Bond – WSDOT Form 272-003A (12/2019): To be executed by the successful Bidder and Surety Company. Email a copy to the Parks Project Manager and mail the original.

Contractor's Authorized Signatures Form: To be completed by the successful Bidder listing the names and title of those individuals in your organization who are authorized to execute proposals, contracts, bonds, pay estimates and other documents on behalf of the organization.

The following forms are to be executed after a contract is signed:

Intent to Pay Prevailing Wages and Affidavit of Wages Paid: To be completed by successful Contractor and all subcontractors via the Labor and Industries website.

City of Mountlake Terrace Business License: To be completed by Contractor and all subcontractors working on-site.

PART I – Legal Documents

Transit Connection Corridor Project (#10106624)
CDS0815(007)
Owner: City of Mountlake Terrace
Solicitor: Mountlake Terrace WA, City of
04/21/2026 02:00 PM PDT

FINAL

Line Item	Item Code	Item Description	UofM	Quantity	**Engineer Estimate** Unit Price	Extension	**Always Active Services** 2014 171st Ave SE Snohomish, WA 98290 Unit Price	Extension	**Granite Construction** 1525 E Marine View Dr. Everett, WA 98201 Unit Price	Extension
1	Std 1-04.4	Minor Change	EST	1	15,000.00	15,000.00	$15,000.00	$15,000.00	$15,000.00	$15,000.00
2	SP 1-05.4	Roadway Surveying	LS	1	10,000.00	10,000.00	$15,000.00	$15,000.00	$12,000.00	$12,000.00
3	SP 1-05.4	Structure Surveying	LS	1	8,000.00	8,000.00	$20,000.00	$20,000.00	$9,000.00	$9,000.00
4	SP 1-05.18	Record Drawings (Min.Bid $5,000)	LS	1	5,000.00	5,000.00	$5,000.00	$5,000.00	$5,000.00	$5,000.00
5	Std 1-07.15	SPCC Plan	LS	1	1,000.00	1,000.00	$1,000.00	$1,000.00	$1,000.00	$1,000.00
6	Std 1-09.7	Mobilization	LS	1	135,000.00	135,000.00	$130,000.00	$130,000.00	$215,000.00	$215,000.00
7	SP 1-10	Traffic Control Supervisor	HR	380	120.00	45,600.00	$85.00	$32,300.00	$90.00	$34,200.00
8	Std 1-10	Flaggers	HR	480	80.00	38,400.00	$85.00	$40,800.00	$50.00	$24,000.00
9	Std 1-10	Other Temporary Traffic Control Devices	LS	1	6,000.00	6,000.00	$20,000.00	$20,000.00	$35,000.00	$35,000.00
10	Std 1-10	Construction Signs Class A	SF	22	50.00	1,100.00	$10.00	$220.00	$45.00	$990.00
11	Std 1-10.3(1)B	Other Traffic Control Labor	HR	240	80.00	19,200.00	$1.00	$240.00	$50.00	$12,000.00
12	SP 1-10	Uniformed Police Officer	HR	80	150.00	12,000.00	$140.00	$11,200.00	$130.00	$10,400.00
13	SP 2-01	Clearing and Grubbing	LS	1	10,000.00	10,000.00	$40,000.00	$40,000.00	$20,000.00	$20,000.00
14	SP 2-02	Removal of Structures and Obstructions	LS	1	10,000.00	10,000.00	$20,000.00	$20,000.00	$30,000.00	$30,000.00
15	SP 2-03	Roadway Excavation Incl. Haul	CY	15	200.00	3,000.00	$100.00	$1,500.00	$150.00	$2,250.00
16	SP 2-03	Gravel Borrow Incl. Haul	TON	880	50.00	44,000.00	$55.00	$48,400.00	$65.00	$57,200.00
17	Std 2-09	Shoring or Extra Excavation Class A	LS	1	25,000.00	25,000.00	$1,000.00	$1,000.00	$30,000.00	$30,000.00
18	SP 4-04	Crushed Surfacing Top Course	TON	120	80.00	9,600.00	$60.00	$7,200.00	$200.00	$24,000.00
19	SP 4-04	Crushed Surfacing Base Course	TON	20	80.00	1,600.00	$60.00	$1,200.00	$200.00	$4,000.00
20	SP 5-04	HMA Cl. 1/2-inch PG 58H-22	TON	2	1,000.00	2,000.00	$1,000.00	$2,000.00	$1,200.00	$2,400.00
21	SP 5-04	Planing Bituminous Pavement	SY	10	250.00	2,500.00	$200.00	$2,000.00	$150.00	$1,500.00
22	SP 6-02	Moment Slab	SY	73	750.00	54,750.00	$720.00	$52,560.00	$1,200.00	$87,600.00
23	SP 6-06	Railing Type 1	LF	100	365.00	36,500.00	$870.00	$87,000.00	$510.00	$51,000.00
24	SP 6-06	Railing Type 2	LF	118	360.00	42,480.00	$890.00	$105,020.00	$550.00	$64,900.00
25	SP 6-06	Railing Type 3	LF	24	260.00	6,240.00	$600.00	$14,400.00	$490.00	$11,760.00
26	SP 6-06	Railing Type 4	LF	32	200.00	6,400.00	$410.00	$13,120.00	$275.00	$8,800.00
27	SP 6-11	Reinforced Concrete Wall 1	SF	580	250.00	145,000.00	$295.00	$171,100.00	$350.00	$203,000.00
28	SP 6-11	Reinforced Concrete Wall 2	SF	280	180.00	50,400.00	$295.00	$82,600.00	$350.00	$98,000.00
29	SP 6-13	Structural Earth Wall 3	SF	1210	190.00	229,900.00	$275.00	$332,750.00	$350.00	$423,500.00
30	SP 7-04	Solid Wall PVC Storm Sewer Pipe (SDR 35) 6 In. Diam.	LF	105	100.00	10,500.00	$18.00	$1,890.00	$85.00	$8,925.00
31	SP 7-04	Solid Wall PVC Storm Sewer Pipe (SDR 35) 8 In. Diam.	LF	10	175.00	1,750.00	$80.00	$800.00	$170.00	$1,700.00
32	SP 7-04	Ductile Iron Storm Sewer Pipe 8 In. Diam.	LF	41	200.00	8,200.00	$175.00	$7,175.00	$140.00	$5,740.00
33	SP 7-05	Catch Basin Type 1	EA	1	3,000.00	3,000.00	$3,500.00	$3,500.00	$3,000.00	$3,000.00
34	SP 7-05	12" Catch Basin with Decorative Grate	EA	7	1,500.00	10,500.00	$1,200.00	$8,400.00	$2,800.00	$19,600.00
35	SP 7-05	Adjust Utility Cover	EA	2	500.00	1,000.00	$750.00	$1,500.00	$930.00	$1,860.00
36	Std 8-01	Erosion/Water Pollution Control	EST	1	8,000.00	8,000.00	$8,000.00	$8,000.00	$8,000.00	$8,000.00
37	Std 8-01	Inlet Protection	EA	10	120.00	1,200.00	$50.00	$500.00	$180.00	$1,800.00
38	Std 8-01	High Visibility Silt Fence	LF	220	15.00	3,300.00	$10.00	$2,200.00	$14.00	$3,080.00
39	Std 8-02	PSIPE Acer X Freemanii 'Jeffersred'/Autumn Blaze Maple (2 1/2" Cal.)	EA	1	300.00	300.00	$1,000.00	$1,000.00	$700.00	$700.00
40	Std 8-02	PSIPE Ginkgo Biloba "Blagon"/Gold Spire Ginkgo (2 1/2" Cal.)	EA	4	300.00	1,200.00	$1,500.00	$6,000.00	$725.00	$2,900.00
41	Std 8-02	PSIPE Azalea Girard Hybrid 'Girard' S Fuchsia/Girard Azalea (2 Gal.)	EA	14	30.00	420.00	$50.00	$700.00	$40.00	$560.00
42	Std 8-02	PSIPE Azalea X 'Hino Crimson'/Hino Crimson Azalea (2 Gal.)	EA	7	30.00	210.00	$50.00	$350.00	$40.00	$280.00
43	Std 8-02	PSIPE Calluna Vulgaris 'Red Fred'/Red Fred Heather (1 Gal.)	EA	24	16.00	384.00	$30.00	$720.00	$21.00	$504.00
44	Std 8-02	PSIPE Calluna Vulgaris 'Spring Torch'/Scotch Heather (1 Gal.)	EA	24	16.00	384.00	$25.00	$600.00	$18.00	$432.00
45	Std 8-02	PSIPE Calluna Vulgaris 'Yellow Beauty'/Heather (1 Gal.)	EA	9	16.00	144.00	$25.00	$225.00	$18.00	$162.00
46	Std 8-02	PSIPE Chameacyparis Obtusa 'Nana Gracilis'/Dwarf Hinoki Cypress (3 Gal.)	EA	2	35.00	70.00	$50.00	$100.00	$110.00	$220.00
47	Std 8-02	PSIPE Erica Carnea 'Springwood White'/White Spring Heather (1 Gal.)	EA	20	16.00	320.00	$25.00	$500.00	$18.00	$360.00
48	Std 8-02	PSIPE Kalmia Latifolia 'Minuet'/Minuet Mountain Laurel (2 Gal.)	EA	55	30.00	1,650.00	$40.00	$2,200.00	$55.00	$3,025.00
49	Std 8-02	PSIPE Pieris Japonica 'Cavatine'/Dwarf Lily of the Valley Bush (2 Gal.)	EA	22	30.00	660.00	$40.00	$880.00	$27.00	$594.00
50	Std 8-02	PSIPE Pinus Strobus 'Blue Shag'/Blue Shag White Pine (5 Gal.)	EA	1	50.00	50.00	$150.00	$150.00	$140.00	$140.00
51	Std 8-02	PSIPE Rhododendron X 'Pjm Compacta'/ Pjm Compact Rhododendron (5 Gal.)	EA	5	45.00	225.00	$150.00	$750.00	$60.00	$300.00
52	Std 8-02	PSIPE Sarcococca Confusa/Sweetbox (2 Gal.)	EA	18	30.00	540.00	$40.00	$720.00	$40.00	$720.00
53	Std 8-02	PSIPE Viburnum Davidii/David Viburnum (2 Gal.)	EA	6	30.00	180.00	$35.00	$210.00	$25.00	$150.00
54	SP 8-02	Topsoil Type A	CY	75	80.00	6,000.00	$80.00	$6,000.00	$90.00	$6,750.00
55	SP 8-02	Landscape Mulch	CY	10	75.00	750.00	$100.00	$1,000.00	$130.00	$1,300.00
56	SP 8-02	Tree Planting with Tree Grate	EA	2	3,500.00	7,000.00	$5,000.00	$10,000.00	$1,020.00	$2,040.00
57	SP 8-02	TCE Area Restoration	SF	3000	10.00	30,000.00	$3.00	$9,000.00	$1.50	$4,500.00
58	SP 8-03	Plaza Irrigation System	LS	1	15,000.00	15,000.00	$16,000.00	$16,000.00	$13,000.00	$13,000.00
59	Std 8-04	Cement Conc. Traffic Curb and Gutter	LF	10	65.00	650.00	$80.00	$800.00	$370.00	$3,700.00
60	Std 8-04	Cement Conc. Pedestrian Curb	LF	45	50.00	2,250.00	$80.00	$3,600.00	$100.00	$4,500.00
61	SP 8-12	Temporary Security Fence	LF	195	40.00	7,800.00	$50.00	$9,750.00	$6.00	$1,170.00
62	Std 8-14	Cement Conc. Sidewalk	SY	120	100.00	12,000.00	$165.00	$19,800.00	$270.00	$32,400.00
63	SP 8-14	Cement Conc. Plaza Paving (Sand Finish)	SY	220	220.00	48,400.00	$175.00	$38,500.00	$250.00	$55,000.00
64	SP 8-19	Foothills River Rock, Washed	TON	12	120.00	1,440.00	$600.00	$7,200.00	$300.00	$3,600.00
65	SP 8-20	Illumination System (Complete)	LS	1	90,000.00	90,000.00	$62,000.00	$62,000.00	$75,000.00	$75,000.00
66	SP 8-32	Mountlake Terrace Plaza Lighted Sign	LS	1	25,000.00	25,000.00	$15,000.00	$15,000.00	$33,000.00	$33,000.00
67	SP 8-32	Bronze Plate Inlay	EA	1	10,000.00	10,000.00	$2,500.00	$2,500.00	$8,000.00	$8,000.00
68	SP 8-32	Wayfinding Sign	EA	1	3,500.00	3,500.00	$3,500.00	$3,500.00	$3,600.00	$3,600.00
69	SP 8-32	Precast Concrete Benches	LS	1	70,000.00	70,000.00	$120,000.00	$120,000.00	$160,000.00	$160,000.00
70	SP 8-32	Arc Benches	LS	1	41,000.00	41,000.00	$32,000.00	$32,000.00	$27,000.00	$27,000.00
71	SP 8-32	Granite Wall Caps and Column Tops	LS	1	60,000.00	60,000.00	$42,000.00	$42,000.00	$140,000.00	$140,000.00
72	SP 8-32	Granite Filler Blocks	LS	1	20,000.00	20,000.00	$5,200.00	$5,200.00	$35,000.00	$35,000.00
73	SP 8-32	Art Sculpture Foundation	LS	1	15,000.00	15,000.00	$18,000.00	$18,000.00	$18,000.00	$18,000.00
74	74	WA State Sales Tax @ 10.5% (Rule 170)	LS	1	158,000.00	158,000.00	$183,588.83	$183,588.83	$229,510.26	$229,510.26
		Base Bid Total				**$1,653,647.00**		**$1,927,118.83**		**$2,415,322.26**

BID PROPOSAL

From: Always Active Services LLC

Contractor's Name

To the City Clerk

Mountlake Terrace, Washington

The undersigned hereby certify(ies) that they have personally examined the location and construction details of work as outlined on the plans and specifications for the **Transit Connection Corridor Project, MLT Project No. C2202, CDS 0815(007),** and have read and thoroughly understand the plans and specifications and contract governing the work embraced in this improvement and the method by which payment will be made for said work and hereby propose to undertake and complete the work embraced in this improvement in accordance with said plans, specifications, and contract at the attached schedule of rates and unit prices.

The following abbreviations are intended to indicate the location of the "payment" sections for each bid item. The abbreviations are not intended to indicate the location of other specifications corresponding to the bid items. Bidders are advised to review the Standard Specifications and the Special Provisions for each item of work.

Note: Unit prices for all items, all extension, state sales tax and total amount of bid must be shown.

Std = Standard Specifications **SP = Special Provisions**

Bid Item	Std or SP	Sec. No.	Description	Quantity	Unit	Unit Price	Total Price
1	Std	1-04.4	Minor Change	1	EST	$15,000.00	$ 15,000.00
2	SP	1-05.4	Roadway Surveying	1	LS	15,000	15,000

LD-18

Provided to Builders Exchange of WA, Inc. For usage Conditions Agreement see www.bxwa.com Always Verify

3	SP	1-05.4	Structure Surveying	1	LS	20,000	20,000
4	SP	1-05.18	Record Drawings (Min. Bid $5,000)	1	LS	5,000	5,000
5	Std	1-07.15	SPCC Plan	1	LS	1,000	1,000
6	Std	1-09.7	Mobilization	1	LS	130,000	130,000
7	SP	1-10	Traffic Control Supervisor	380	HR	85	32,300
8	Std	1-10	Flaggers	480	HR	85	40,800
9	Std	1-10	Other Temporary Traffic Control Devices	1	LS	20,000	20,000
10	Std	1-10	Construction Signs Class A	22	SF	10	220
11	Std	1-10.3(1)B	Other Traffic Control Labor	240	HR	1.00	240
12	SP	1-10	Uniformed Police Officer	80	HR	140	
13	SP	2-01	Clearing and Grubbing	1	LS	40,000	40,000
14	SP	2-02	Removal of Structures and Obstructions	1	LS	20,000	20,000
15	SP	2-03	Roadway Excavation Incl. Haul	15	CY	100	1500
16	SP	2-03	Gravel Borrow Incl. Haul	880	TON	55	48,400
17	Std	2-09	Shoring or Extra Excavation Class A	1	LS	1,000	1,000
18	SP	4-04	Crushed Surfacing Top Course	120	TON	60	7,200
19	SP	4-04	Crushed Surfacing Base Course	20	TON	60	1,200
20	SP	5-04	HMA Cl. 1/2-inch PG 58H-22	2	TON	1,000	2,000
21	SP	5-04	Planing Bituminous Pavement	10	SY	200	2,000
22	SP	6-02	Moment Slab	73	SY	720	52,560
23	SP	6-06	Railing Type 1	100	LF	870	87,000
24	SP	6-06	Railing Type 2	118	LF	890	105,020

Provided to Builders Exchange of WA, Inc. For usage Conditions Agreement see www.bxwa.com Always Verify

25	SP	6-06	Railing Type 3	24	LF	600	14,400
26	SP	6-06	Railing Type 4	32	LF	410	13,120
27	SP	6-11	Reinforced Concrete Wall 1	580	SF	295	171,100
28	SP	6-11	Reinforced Concrete Wall 2	280	SF	295	82,600
29	SP	6-13	Structural Earth Wall 3	1,210	SF	275	332,750
30	SP	7-04	Solid Wall PVC Storm Sewer Pipe (SDR 35) 6 In. Diam.	105	LF	18	1890
31	SP	7-04	Solid Wall PVC Storm Sewer Pipe (SDR 35) 8 In. Diam.	10	LF	80	800
32	SP	7-04	Ductile Iron Storm Sewer Pipe 8 In. Diam.	41	LF	175	7175
33	SP	7-05	Catch Basin Type 1	1	EA	3500	3,500
34	SP	7-05	12" Catch Basin with Decorative Grate	7	EA	1200	8,400
35	SP	7-05	Adjust Utility Cover	2	EA	750	1500
36	Std	8-01	Erosion/Water Pollution Control	1	EST	$8,000	$8,000
37	Std	8-01	Inlet Protection	10	EA	50	500
38	Std	8-01	High Visibility Silt Fence	220	LF	10	2,200
39	Std	8-02	PSIPE Acer X Freemanii 'Jeffersred'/Autumn Blaze Maple (2 ½" Cal.)	1	EA	1,000	1,000
40	Std	8-02	PSIPE Ginkgo Biloba "Blagon"/Gold Spire Ginkgo (2 ½" Cal.)	4	EA	1500	6,000
41	Std	8-02	PSIPE Azalea Girard Hybrid 'Girard' S Fuchsia / Girard Azalea (2 Gal.)	14	EA	50	700
42	Std	8-02	PSIPE Asalea X 'Hino Crimson' / Hino Crimson Azalea (2 Gal.)	7	EA	50	350
43	Std	8-02	PSIPE Calluna Vulgaris 'Red Fred' / Red Fred Heather (1 Gal.)	24	EA	30	720

Provided to Builders Exchange of WA, Inc. For usage Conditions Agreement see www.bxwa.com Always Verify

44	Std	8-02	PSIPE Calluna Vulgaris 'Spring Torch' / Scotch Heather (1 Gal.)	24	EA	25	600
45	Std	8-02	PSIPE Calluna Vulgaris 'Yellow Beauty' / Heather (1 Gal.)	9	EA	25	225
46	Std	8-02	PSIPE Chameacyparis Obtusa 'Nana Gracilis' / Dwarf Hinoki Cypress (3 Gal.)	2	EA	50	100
47	Std	8-02	PSIPE Erica Carnea 'Springwood White' / White Spring Heather (1 Gal.)	20	EA	25	500
48	Std	8-02	PSIPE Kalmia Latifolia 'Minuet' / Minuet Mountain Laurel (2 Gal.)	55	EA	40	2,200
49	Std	8-02	PSIPE Pieris Japonica 'Cavatine' / Dwarf Lily of The Valley Bush (2 Gal.)	22	EA	40	880
50	Std	8-02	PSIPE Pinus Strobus 'Blue Shag' / Blue Shag White Pine (5 Gal.)	1	EA	150	150
51	Std	8-02	PSIPE Rhododendron X 'Pjm Compacta' / Pjm Compact Rhododendron (5 Gal.)	5	EA	150	750
52	Std	8-02	PSIPE Sarcococca Confusa / Sweetbox (2 Gal.)	18	EA	40	720
53	Std	8-02	PSIPE Viburnum Davidii / David Viburnum (2 Gal.)	6	EA	35	210
54	SP	8-02	Topsoil Type A	75	CY	80	6,000
55	SP	8-02	Landscape Mulch	10	CY	100	1,000
56	SP	8-02	Tree Planting with Tree Grate	2	EA	5000	10,000
57	SP	8-02	TCE Area Restoration	3,000	SF	3.00	9,000
58	SP	8-03	Plaza Irrigation System	1	LS	16,000	16,000
59	Std	8-04	Cement Conc. Traffic Curb and Gutter	10	LF	80	800
60	Std	8-04	Cement Conc. Pedestrian Curb	45	LF	80	3600
61	SP	8-12	Temporary Security Fence	195	LF	50	9750

Provided to Builders Exchange of WA, Inc. For usage Conditions Agreement see www.bxwa.com Always Verify

62	Std	8-14	Cement Conc. Sidewalk	120	SY	165	19,800
63	SP	8-14	Cement Conc. Plaza Paving (Sand Finish)	220	SY	175	38,500
64	SP	8-19	Foothills River Rock, Washed	12	TON	600	7,200
65	SP	8-20	Illumination System (Complete)	1	LS	62,000	62,000
66	SP	8-32	Mountlake Terrace Plaza Lighted Sign	1	LS	15,000	15,000
67	SP	8-32	Bronze Plate Inlay	1	EA	2,500	2,500
68	SP	8-32	Wayfinding Sign	1	EA	3,500	3,500
69	SP	8-32	Precast Concrete Benches	1	LS	120,000	120,000
70	SP	8-32	Arc Benches	1	LS	32,000	32,000
71	SP	8-32	Granite Wall Caps and Column Tops	1	LS	42,000	42,000
72	SP	8-32	Granite Filler Blocks	1	LS	5,200	5,200
73	SP	8-32	Art Sculpture Foundation	1	LS	18,000	18,000
74			WA State Sales Tax @ 10.5% (Rule 170)	1	LS	183,588.83	183,588.83

Total Bid: 1,927,118.83

The bidder agrees to complete all work awarded to them on **Base Bid** within **85 working days** from the Notice to Proceed Date as specified in Section 1-08.5 of the Special Provisions.

If written notice of acceptance of this bid is mailed, telegraphed or delivered to the undersigned within forty-five (45) days after the date of opening of the bids, or at any time thereafter before this bid is withdrawn, the undersigned agrees that Bidder will give performance bond as specified, with good and sufficient Surety or Sureties, all within ten (10) days (unless a longer period is allowed) after the prescribed forms are presented to Bidder for signature.

Included is a bid proposal deposit, as required, consisting of (certified check, cashier's check, or surety bond) in the amount of $ 5% which amount is not less than five percent (5%) of the total bid.

The party by whom this bid is submitted and by whom the contract will be entered into in the

Provided to Builders Exchange of WA, Inc. For usage Conditions Agreement see www.bxwa.com Always Verify

event the award is made to them is Always Active Services LLC, a corporation/partnership/individual (indicate which), doing business at 2014 171st Ave SE Snohomish WA 98290 to which address notice of acceptance should be sent.

The Bidder hereby acknowledges receipt of addenda numbers 1, ___, ___, ___; and the bid contained herein is reflective of the addenda

Contractor's Registration Number: ALWAYAS800PT

Contractor's UBI Number: 604 594 690

Contractor's state excise tax registration number: A63110424

Contractor's Employment Security Department number: 000-152611-00-6

Always Active Services LLC

Legal Name of Person, Firm or Corporation

By: [signature] owner

Title: owner

Address: 2014 171st Ave SE Snohomish WA 98290

Phone: 206 713 0759

Provided to Builders Exchange of WA, Inc. For usage Conditions Agreement see www.bxwa.com Always Verify

Local Agency Proposal Bond

KNOW ALL MEN BY THESE PRESENTS, That we, Always Active Services, LLC

of Snohomish, WA as principal, and the United Fire & Casualty Company

a corporation duly organized under the laws of the state of Iowa , and

authorized to do business in the State of Washington, as surety, are held and firmly bound unto City of Mountlake Terrace ~~the State of Washington~~ in the full and penal sum of five (5) percent of the total amount of the bid proposal of said principal for the work hereinafter described, for the payment of which, well and truly to be made, we bind our heirs, executors, administrators and assigns, and successors and assigns, firmly by these presents.

The condition of this bond is such, that whereas the principal herein is herewith submitting his or its sealed proposal for the following highway construction, to wit:

Transit Connection Corridor Project, (CDS 0815(007))

said bid and proposal, by reference thereto, being made a part hereof.

NOW, THEREFORE, If the said proposal bid by said principal be accepted, and the contract be awarded to said principal, and if said principal shall duly make and enter into and execute said contract and shall furnish bond as required by the within a period of twenty (20) days from and after said award, exclusive of the day of such award, then this obligation shall be null and void, otherwise it shall remain and be in full force and effect.

IN TESTIMONY WHEREOF, The principal and surety have caused these presents to be signed and sealed this 17th day of April, 2026.

Always Active Services, LLC

By: _____

(Principal)

United Fire & Casualty Company

(Surety)

By: _____

Kristine Santamaria (Attorney-in-fact)

SR

DOT Form 272-001A EF
07/2011

LD-24

UNITED FIRE & CASUALTY COMPANY, CEDAR RAPIDS, IA
UNITED FIRE & INDEMNITY COMPANY, WEBSTER, TX
FINANCIAL PACIFIC INSURANCE COMPANY, LOS ANGELES, CA
CERTIFIED COPY OF POWER OF ATTORNEY
(original on file at Home Office of Company – See Certification)

Inquiries: Surety Department
118 Second Ave SE
Cedar Rapids, IA 52401

KNOW ALL PERSONS BY THESE PRESENTS, That United Fire & Casualty Company, a corporation duly organized and existing under the laws of the State of Iowa; United Fire & Indemnity Company, a corporation duly organized and existing under the laws of the State of Texas; and Financial Pacific Insurance Company, a corporation duly organized and existing under the laws of the State of California (herein collectively called the Companies), and having their corporate headquarters in Cedar Rapids, State of Iowa, does make, constitute and appoint

HOLLY E. ULFERS, ROXANA PALACIOS, JAMIE ARMFIELD, SCOTT C. ALDERMAN, AMBER ENGEL, MARINA MATYUNIN, KRISTINE SANTAMARIA, SANDRA STEWART, BEN WELLS, ALLISON MCCLINTOCK, LAURA KOVARIK, EACH INDIVIDUALLY

their true and lawful Attorney(s)-in-Fact with power and authority hereby conferred to sign, seal and execute in its behalf all lawful bonds, undertakings and other obligatory instruments of similar nature provided that no single obligation shall exceed $50,000,000.00 and to bind the Companies thereby as fully and to the same extent as if such instruments were signed by the duly authorized officers of the Companies and all of the acts of said Attorney, pursuant to the authority hereby given and hereby ratified and confirmed.

The Authority hereby granted is continuous and shall remain in full force and effect until revoked by United Fire & Casualty Company, United Fire & Indemnity Company, and Financial Pacific Insurance Company.

This Power of Attorney is made and executed pursuant to and by authority of the following bylaw duly adopted by the Boards of Directors of United Fire & Casualty Company, United Fire & Indemnity Company, and Financial Pacific Insurance Company.

"Article VI – Surety Bonds and Undertakings"

Section 2, Appointment of Attorney-in-Fact. "The President or any Vice President, or any other officer of the Companies may, from time to time, appoint by written certificates attorneys-in-fact to act in behalf of the Companies in the execution of policies of insurance, bonds, undertakings and other obligatory instruments of like nature. The signature of any officer authorized hereby, and the Corporate seal, may be affixed by facsimile to any power of attorney or special power of attorney or certification of either authorized hereby; such signature and seal, when so used, being adopted by the Companies as the original signature of such officer and the original seal of the Companies, to be valid and binding upon the Companies with the same force and effect as though manually affixed. Such attorneys-in-fact, subject to the limitations set of forth in their respective certificates of authority shall have full power to bind the Companies by their signature and execution of any such instruments and to attach the seal the Companies thereto. The President or any Vice President, the Board of Directors or any other officer of the Companies may at any time revoke all power and authority previously given to any attorney-in-fact.

IN WITNESS WHEREOF, the COMPANIES have each caused these presents to be signed by its vice president and its corporate seal to be hereto affixed this 29th day of June, 2022

UNITED FIRE & CASUALTY COMPANY
UNITED FIRE & INDEMNITY COMPANY
FINANCIAL PACIFIC INSURANCE COMPANY

By: Kyanna M Saylor
Vice President

State of Iowa, County of Linn, ss:

On 29th day of June, 2022, before me personally came Kyanna M. Saylor to me known, who being by me duly sworn, did depose and say; that she resides in Cedar Rapids, State of Iowa; that she is a Vice President of United Fire & Casualty Company, a Vice President of United Fire & Indemnity Company, and a Vice President of Financial Pacific Insurance Company the corporations described in and which executed the above instrument; that she knows the seal of said corporations; that the seal affixed to the said instrument is such corporate seal; that it was so affixed pursuant to authority given by the Board of Directors of said corporations and that she signed her name thereto pursuant to like authority, and acknowledges same to be the act and deed of said corporations.

Judith A. Jones
Iowa Notarial Seal
Commission number 173041
My Commission Expires 04/23/2027

Judith A Jones
Notary Public
My commission expires: 04/23/2027

I, Mary A. Bertsch, Assistant Secretary of United Fire & Casualty Company and Assistant Secretary of United Fire & Indemnity Company, and Assistant Secretary of Financial Pacific Insurance Company, do hereby certify that I have compared the foregoing copy of the Power of Attorney and affidavit, and the copy of the Section of the bylaws and resolutions of said Corporations as set forth in said Power of Attorney, with the ORIGINALS ON FILE IN THE HOME OFFICE OF SAID CORPORATIONS, and that the same are correct transcripts thereof, and of the whole of the said originals, and that the said Power of Attorney has not been revoked and is now in full force and effect

In testimony whereof I have hereunto subscribed my name and affixed the corporate seal of the said Corporations this 17th day of April, 20 26.

By: Mary A Bertsch
Assistant Secretary,
UF&C & UF&I & FPIC

BPOA0049 1217

Washington State Department of Transportation

Subcontractor List

Prepared in compliance with RCW 39.30.060 as amended

To Be Submitted with the Bid Proposal

Project Name Transit Connection Corridor CDS0815(007)

Failure to list subcontractors with whom the bidder, if awarded the contract, will directly subcontract for performance of the work of structural steel installation, rebar installation, heating, ventilation and air conditioning, plumbing, as described in Chapter 18.106 RCW, and electrical, as described in Chapter 19.28 RCW or naming more than one subcontractor to perform the same work will result in your bid being non-responsive and therefore void.

Subcontractor(s) with whom the bidder will directly subcontract that are proposed to perform the work of structural steel installation, rebar installation, heating, ventilation and air conditioning, plumbing, as described in Chapter 18.106 RCW, and electrical as described in Chapter 19.28 RCW must be listed below. The work to be performed is to be listed below the subcontractor(s) name.

If RCW 39.30.060 requires a proof of license, the license number of that Subcontractor is required. To the extent the Project includes one or more categories of work referenced in RCW 39.30.060, and no subcontractor is listed below to perform such work, the bidder certifies that the work will either (i) be performed by the bidder itself, or (ii) be performed by a lower tier subcontractor who will not contract directly with the bidder.

Subcontractor Name (and License Number if required): Service Electric SERVIEC564RU
Work to be performed: Electrical

Subcontractor Name (and License Number if required): Dependable Contracting DEPENCS910LW
Work to be performed: rebar & steel

Subcontractor Name (and License Number if required):
Work to be performed:

Subcontractor Name (and License Number if required):
Work to be performed:

Subcontractor Name (and License Number if required):
Work to be performed:

* Bidder's are notified that it is the opinion of the enforcement agency that PVC or metal conduit, junction boxes, etc. are considered electrical equipment and therefore considered part of electrical work, even if the installation is for future use and no wiring or electrical current is connected during the project.

DOT Form 271-015 Revised 06/2025
• Previous Versions Obsolete •

City of Mountlake Terrace

23204 58th Ave W.
Mountlake Terrace, WA 98043

Local Agency Subcontractor List

Prepared in compliance with RCW 39.30.060 as amended

To Be Submitted with the Bid Proposal

Project Name Transit Connection Corridor CDS0815(007)

Failure to list subcontractors with whom the bidder, if awarded the contract, will directly subcontract for performance of the work of structural steel installation, rebar installation, heating, ventilation and air conditioning, plumbing, as described in Chapter 18.106 RCW, and electrical, as described in Chapter 19.28 RCW or naming more than one subcontractor to perform the same work will result in your bid being non-responsive and therefore void.

Subcontractor(s) with whom the bidder will directly subcontract that are proposed to perform the work of structural steel installation, rebar installation, heating, ventilation and air conditioning, plumbing, as described in Chapter 18.106 RCW, and electrical as described in Chapter 19.28 RCW must be listed below. The work to be performed is to be listed below the subcontractor(s) name.

To the extent the Project includes one or more categories of work referenced in RCW 39.30.060, and no subcontractor is listed below to perform such work, the bidder certifies that the work will either (i) be performed by the bidder itself, or (ii) be performed by a lower tier subcontractor who will not contract directly with the bidder.

Subcontractor Name Service Electric license # : SERVIEC564RU
Work to be performed electrical

Subcontractor Name Dependable Contracting DEPENCS910LW
Work to be performed rebar & steel

Subcontractor Name
Work to be performed

Subcontractor Name
Work to be performed

Subcontractor Name
Work to be performed

* Bidder's are notified that it is the opinion of the enforcement agency that PVC or metal conduit, junction boxes, etc, are considered electrical equipment and therefore considered part of electrical work, even if the installation is for future use and no wiring or electrical current is connected during the project.

Failure to return this Declaration as part of the bid proposal package will make the bid nonresponsive and ineligible for award.

NON-COLLUSION DECLARATION

I, by signing the proposal, hereby declare, under penalty of perjury under the laws of the United States that the following statements are true and correct:

1. That the undersigned person(s), firm, association or corporation has (have) not, either directly or indirectly, entered into any agreement, participated in any collusion, or otherwise taken any action in restraint of free competitive bidding in connection with the project for which this proposal is submitted.
2. **That by signing the signature page of this proposal, I am deemed to have signed and to have agreed to the provisions of this declaration.**

NOTICE TO ALL BIDDERS

To report rigging activities call:

1-800-424-9071

The U.S. Department of Transportation (USDOT) operates the above toll-free "hotline" Monday through Friday, 8:00 a.m. to 5:00 p.m., eastern time. Anyone with knowledge of possible bid rigging, bidder collusion, or other fraudulent activities should use the "hotline" to report such activities.

The "hotline" is part of USDOT's continuing effort to identify and investigate highway construction contract fraud and abuse and is operated under the direction of the USDOT Inspector General. All information will be treated confidentially and caller anonymity will be respected.

Local Agency Certification for Federal-Aid Contracts

The prospective participant certifies by signing and submitting this bid or proposal, to the best of his or her knowledge and belief, that:

(1) No Federal appropriated funds have been paid or will be paid, by or on behalf of the undersigned, to any person for influencing or attempting to influence an officer or employee of any Federal agency, a Member of Congress, an officer or employee of Congress, or an employee of a Member of Congress in connection with the awarding of any Federal contract, the making of any Federal grant, the making of any Federal loan, the entering into of any cooperative agreement, and the extension, continuation, renewal, amendment, or modification of any Federal contract, grant, loan or cooperative agreement.

(2) If any funds other than Federal appropriated funds have been paid or will be paid to any person for influencing or attempting to influence an officer or employee of any Federal agency, a Member of Congress, an officer or employee of Congress, or an employee of a Member of Congress in connection with this Federal contract, grant, loan, or cooperative agreement, the undersigned shall complete and submit Standard Form-LLL, "Disclosure Form to Report Lobbying," in accordance with its instructions.

This certification is material representation of the fact upon which reliance was placed when this transaction was made or entered into. Submission of this certification is a prerequisite for making or entering into this transaction imposed by Section 1352, Title 31, U.S. Code. Any person who fails to file the required certification shall be subject to a civil penalty of not less than $10,000 and not more than $100,000 for each failure.

The prospective participant also agrees by submitting his or her bid or proposal that he or she shall require that the language of this certification be included in all lower tier subcontracts, which exceed $100,000 and that all such subrecipients shall certify and disclose accordingly.

CITY OF MOUNTLAKE TERRACE

Certification of Compliance with Wage Payment Statutes

The bidder hereby certifies that, within the three-year period immediately preceding the bid solicitation date (March 31, 2026), the bidder is not a "willful" violator, as defined in RCW 49.48.082, of any provision of chapters 49.46, 49.48, or 49.52 RCW, as determined by a final and binding citation and notice of assessment issued by the Department of Labor and Industries or through a civil judgment entered by a court of limited or general jurisdiction.

I declare under penalty of perjury under the laws of the State of Washington that the foregoing is true and correct.

Always Active Services LLC
Bidder's Business Name

Signature of Authorized Official*

Amanda Franks
Printed Name

owner
Title

at

4/21/26 — Date
Snohomish — City
WA — State or country

Check One:

Sole Proprietorship ☐ Partnership ☐ Joint Venture ☐ Corporation ☒

State of Incorporation, or if not a corporation, State where business entity was formed:

Washington

If a co-partnership, give firm name under which business is transacted:

_____

** If a corporation, proposal must be executed in the corporate name by the president or vice-president (or any other corporate officer accompanied by evidence of authority to sign). If a co-partnership, proposal must be executed by a partner.*

Washington State Department of Transportation

Bidder Questionnaire

Agency Name: City of Mountlake Terrace	Federal Aid Number: COS 0815(007)
Prime Contractor Name: Always Active Services LLC	Contract Number: MLT3
Contract Name: Transit Connection Corridor Project	

Firm/Subcontractor Name	Address (incl. Zipcode)	DBE Status	NAICS Codes	Scope of Work	Firm Age	Firm Gross Receipts
Service Electric Co. Inc	PO BOX 1489 Snohomish WA 98290	non DBE	238210	Electrical	93	$10-20 mill
Valley Electric	1100 Merrill Creek Pkwy	non DBE	238210	Electrical	43	greater than 30.72 mill
North Line Surveying Inc	1580 Port Drive Burlington WA 98233	non DBE	541370	surveying	8	$1-3 mill
Hughes Group LLC	3701 S Lawrence St Tacoma WA 98409	DBE	561990	Traffic Control	24	$6-10 mill
NW Linings & Geotextile Products Inc	20824 77th Ave S Kent WA 98032	non DBE	237110	supply	53	greater than 30.72 mill
NorthWest Precast Products	15333 110th Ave E	non DBE	327390	Precast Benches	34	$6-10 mill
Dependable Contracting	PO BOX 187 Lake Stevens WA 98258	non DBE	327320	concrete	17	$14-6 mill

If you have additional Firms or Subcontractors that submitted Bids, please complete additional forms.

Amanda Franks
Prime Contractor Representative

owner
Title

4/21/26
Date

DOT Form 272-022 Revised 12/2025
• Previous Versions Obsolete •

Provided to Builders Exchange of WA, Inc. For usage Conditions Agreement see www.bxwa.com Always Verify Seal

Form Instructions

The following information on each firm that submitted a bid is required as part of part of 49 CFR 26.11(c)(2):

Firm/Subcontractor Name: Enter the name of each firm or subcontractor who submitted a quote or a bid on the contract.

Address: Enter the date the main address of the firm/subcontractor. Include the zip code.

DBE Status: Enter the DBE status. *Options are DBE and Non-DBE.*

NAICS Codes: Enter the appropriate NAICS Codes for the work the bid was submitted.

Scope of Work: Enter the scope of the work the bid was submitted for.

Firm Age: Enter the age of the Firm.

Firm Gross Receipts: Enter the annual gross receipts. *Options are "Less than $1 million", "$1-$3 million", "$3-$6 million", "$6-$10 million", "$10-$20 million ", "$20-$30.72 million ", "Greater than $30.72 million ".*

Provided to Builders Exchange of WA, Inc. For usage Conditions Agreement see www.bxwa.com Always Verify Seal

ADDENDUM

Transit Connection Corridor Project
Project Number C2202, FA#: CDS 0815(007)
Addendum #1

Issue Date: April 16, 2026
Bid Closing Date: April 21, 2026, 2 p.m. Pacific Time
QuestCDN Project: eBidDoc Number 10106624

NOTICE TO ALL PLAN HOLDERS:
Bidders are hereby notified of the following additional information:

1. The second sentence of the first paragraph in the Invitation/Call for Bids is modified as follows:

"Bids will be received until 2:00 p.m., Pacific Time, on **Tuesday**, April 21, 2026".

2. Appendix H – Traffic Control Plan is replaced with the renewed WSDOT Permit NWS 2575-MLT, see attached.

See additional information on the following pages.

3. Railing Type 2, Section B-B detail on Sheet S07, is revised with the following:

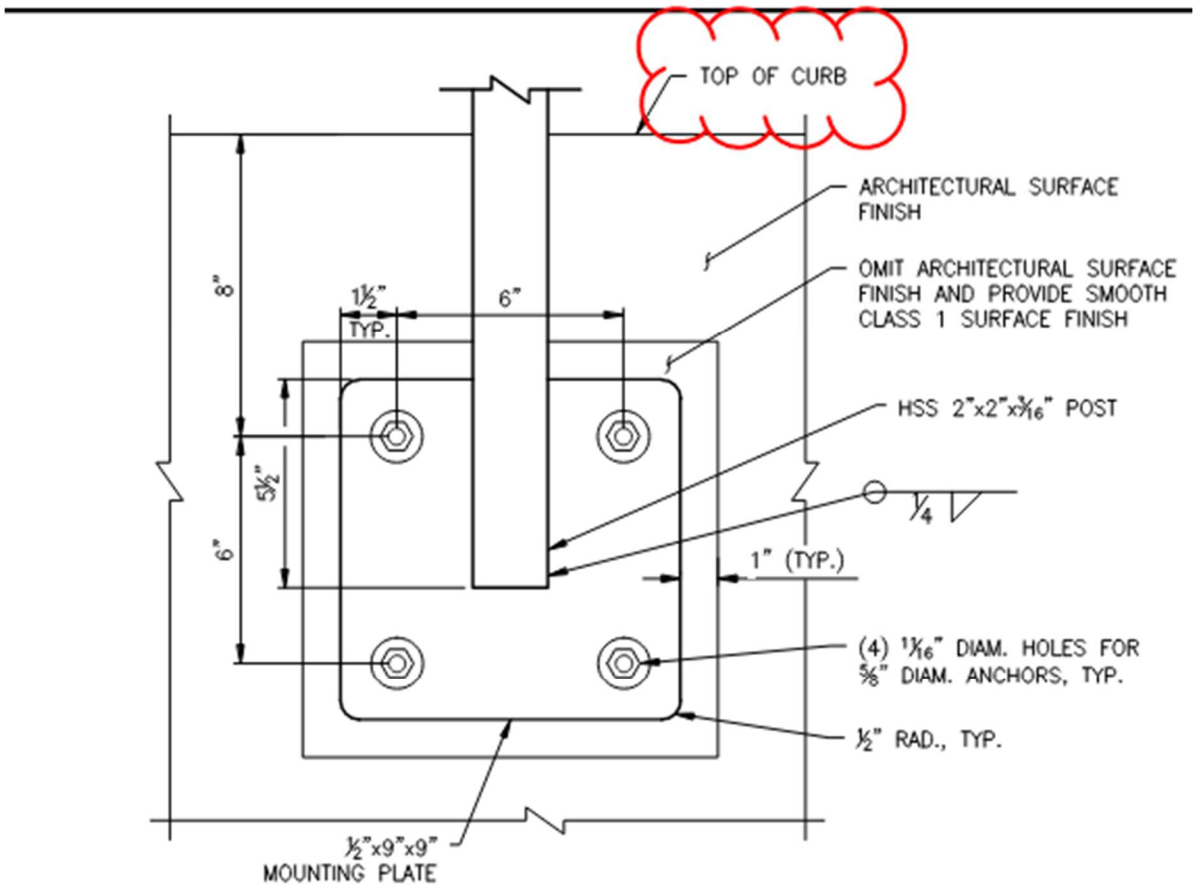

All other elements of the Invitation/Call for Bids and Contract Provisions remain unchanged.

Bidders shall take this Addendum into consideration when preparing their bids. Bidders shall acknowledge receipt of this Addendum when submitting their bids.

David M. Paul

Digitally signed by David M. Paul
Date: 2026.04.15 15:39:43-07'00'

David M. Paul, PE,

City Engineer - Interim

APPENDIX H - Traffic Control Plan

Docusign Envelope ID: F922A37B-A42F-42D6-9A96-09B1A7B7ED2E

Washington State Department of Transportation

General Permit (Application and Permit)

Applicant (hereinafter referred to as Permit Holder) City of Mountlake Terrace, Donnelle Dayao - Parks Project Manager				Permit Number **GP** NWS-2575-MLT
Address 23204 58th Ave W				State Route 5
City Mountlake Terrace	State WA	Zip Code 98043	Begin Milepost (if applicable) Left ☐ Right ☐ 178.26	End Milepost (if applicable) Left ☐ Right ☐
Phone Number 425-744-6286		FED ID/SWV # n/a		Region Northwest
Email DDayao@mltwa.gov				County King

Project Name (if applicable)
236th Street Pedestrian Plaza

Public Land Survey System (PLSS)

At or begins at ☐ NE 1/4 ☐ NW 1/4 ☐ SW 1/4 ☑ SE 1/4 Section 32 Township 27-N Range 4-E

and if applicable ends at ☐ NE 1/4 ☐ NW 1/4 ☐ SW 1/4 ☑ SE 1/4 Section 32 Township 27-N Range 4-E

This General Permit shall apply to all Work being constructed by the permit on WSDOT right-of-way that is owned by or under WSDOT jurisdiction and includes all Work that will be WSDOT's responsibility to maintain when the Work is completed and accepted by WSDOT. (RCW 47.24.020 City Streets as part of State Highways.)

Intended Use of WSDOT Highway Right-of-Way (hereinafter referred to as the "Work"):

The implementation of traffic control within I-5 Limited Access.

The Washington State Department of Transportation hereinafter will be referred to as "WSDOT." WSDOT will allow the Permit Holder to construct, upgrade, use, and/or maintain the Work described above provided the Permit Holder accepts all the terms, provisions, and exhibits attached hereto and by this reference made a part of this permit.

Exhibit "A": General Permit Special Provisions
Exhibit "B": Right of Way Sheet and/or Vicinity Map
Exhibit "C": Traffic Control Plan
Exhibit "D": n/a
Exhibit "E": n/a
Exhibit "F": n/a

By signing below the Permit Holder accepts all the terms, provision, and exhibits attached to and made a part of this permit.

Permit Holder	WSDOT Approval
Print Name Jeff Niten	Print Name Randy Frantz
Print Title City Manager	Print Title Development Services Assistant Manager
Signature Jeff Niten	Signature Randy Frantz Digitally signed by Randy Frantz DN: C=US, E=frantzr@wsdot.wa.gov, O=WSDOT, CN=Randy Frantz Date: 2025.10.13 12:46:19-07'00'
Date 10/17/2025	Date 10/13/2025
	Expiration Date December 30, 2026

General Provisions

No changes to these General Provisions may be made without further approval of the Office of the Attorney General

DOCUMENTS, NON-EXCLUSIVE, COMPLIANCE WITH LAW, WORK

1. A copy of this Permit must be on the job site, protected from the elements, at all times during any Permit Holder activity, construction or improvement Work as authorized by this Permit. "Work" under this Permit shall include the use of WSDOT-owned right-of-way as authorized herein.
2. The Permit Holder shall be responsible for compliance with all applicable federal, state, tribal and local laws, ordinances and regulations, that affect work being performed pursuant to this Permit. The Permit Holder shall defend and indemnify WSDOT and the State of Washington against any claims that may arise because the Permit Holder (or any of its employees or subcontractors) violated a legal requirement.
3. The Permit Holder agrees that all Work shall be performed and completed to the satisfaction of WSDOT. All material and workmanship shall conform, in the sole discretion of WSDOT, to WSDOT's Standard Specifications for Road, Bridge, and Municipal Construction, current edition and amendments thereto, unless WSDOT has agreed in writing to a different standard, and shall be subject to WSDOT inspection. All WSDOT inspections of Work within WSDOT-owned highway right-of-way or upon state highway right-of-way under WSDOT jurisdiction, are solely for the benefit of WSDOT and not for the benefit of the Permit Holder, Permit Holder's contractor (if any), or any third party.
4. Upon approval of this Permit, the Permit Holder agrees to and shall diligently proceed with the Work and comply with all of the terms, provisions, and exhibits attached herein. Unless specified otherwise by WSDOT, or agreed to in writing by WSDOT, the work authorized by this Permit shall begin, be completed, or shall expire by the dates as agreed to by this Permit and its provisions, as indicated on page 1.

RIGHT OF ENTRY NON-EXCLUSIVE

5. Subject to the terms of this Permit, WSDOT hereby grants to the Permit Holder, its authorized agents, contractors, subcontractors, and employees, a right of entry upon WSDOT-owned highway right-of-way or upon state highway right-of-way under WSDOT jurisdiction, onto which access is necessary to construct, operate and/or maintain the completed Work.

   If WSDOT has approved any limited access breaks, or inner corridor access breaks, for the Work, the Permit Holder shall strictly comply with the terms and conditions of such approval.

WSDOT NOTIFICATION: SURVEY MONUMENTS, HIGHWAY SIGNS, FENCES, LANDSCAPING

6. Unless authorized by WSDOT or other affected property owner in writing, the Permit Holder shall assure that all public and private property, including but not limited to traffic signal equipment, signs, guide markers, lane markers, fences, mailboxes, guardrail, barriers, and utilities, are not impacted, damaged, destroyed, or removed. If any such property is damaged, destroyed, or removed without prior written authorization, the Permit Holder shall notify WSDOT's representative immediately of such impact, damage, destruction or removal. The Permit Holder shall replace, repair, or fully restore any private or public property that is damaged, destroyed, or removed to WSDOT's sole satisfaction.
7. The Permit Holder shall not disturb, remove, or destroy any existing Survey Monument before first obtaining a Washington State Department of Natural Resources (DNR) permit. The Permit Holder agrees that resetting Survey Monuments shall be the sole responsibility, and at the sole expense, of the Permit Holder. Such resetting of any Survey Monument shall be performed by or under the direct supervision of a Licensed Professional Land Surveyor. The Permit Holder shall notify WSDOT in writing within ten (10) calendar days of any Survey Monument that has been disturbed, removed, destroyed, or reset, and shall restore the Survey Monument to its original place and condition at the Permit Holder's sole expense within ten (10) calendar days of its disturbance, damage or destruction.

   If Permit holder does not perform the resetting work as required herein, WSDOT may perform such work and the Permit Holder agrees to fully reimburse and make payment to WSDOT within thirty (30) calendar days of the date of WSDOT's detailed invoice pursuant to Section 27 – Invoice and Payments, herein. If WSDOT chooses not to make the repairs, WSDOT may initiate an action to revoke this Permit.

   A listing of Survey Monuments can be found at the WSDOT's Geographic Services Office Website: http://www.wsdot.wa.gov/monument/searchBroad.aspx

DISTURBANCE OF EXISTING RIGHT-OF-WAY VEGETATION

8. Unless otherwise authorized by WSDOT's representative in writing prior to the start of any Work, this Permit does not authorize the Permit Holder, its' employees, contractors, or agents, any right to cut, spray, retard, remove, destroy, disfigure, or in any way modify the physical condition of any vegetative or landscaping material located on WSDOT owned highway right-of-way or upon state highway right-of-way under WSDOT jurisdiction. Should the Permit Holder anticipate that its' Work will alter the appearance of WSDOT-owned highway right-of-way vegetation or landscaping material, the Permit Holder shall notify the WSDOT representative listed in Special Provision 1 to obtain WSDOT's prior written approval of the Permit Holder's proposed Work. If WSDOT allows the Permit Holder to modify WSDOT-owned highway right-of-way vegetation, it agrees that any vegetation cutting and/or trimming activities shall be conducted in such a manner that WSDOT-owned highway right-of-way vegetation and landscaping material appearance or functionality will not be altered or damaged. Should the Permit Holder alter or damage the appearance of WSDOT-owned highway right-of-way vegetation and landscaping without WSDOT's prior written approval, the Permit Holder is subject to penalties provided for in RCW's 47.40.070, 47.40.080, and 4.24.630, as applicable.

REMOVAL OF TIMBER

9. This Permit is issued pursuant to the applicable terms of RCW 47.12.140 (Severance and Sale of Timber and other personalty - Removal of nonmarketable materials). This Permit does not authorize the Permit Holder, its' employees, contractors, or agents, any right to cut or remove any trees or timber located on WSDOT right-of-way or upon state highway right-of-way under WSDOT jurisdiction without prior written approval from WSDOT.

MERCHANDISING

10. It is unlawful for any person to build, erect, establish, operate, maintain, or conduct along and upon the right-of-way of any state highway any platform, box, stand, or any other temporary or permanent device or structure used or to be used for the purpose of receiving, vending, or delivering any milk, milk cans, vegetables, fruits, merchandise, produce, or any other thing or commodity of any nature unless a permit therefore has first been obtained from WSDOT. WSDOT shall in each instance determine where any platform, box, stand, or any other temporary or permanent device or structure shall be permitted pursuant to RCW 47.32.110.

EROSION CONTROL AND DRAINAGE

11. All discharges to WSDOT right-of-way or upon WSDOT highway right-of-way under WSDOT jurisdiction, if allowed, shall conform to State and Local water quality regulations and shall meet WAC 173-201A (Water Quality Standards for Surface Waters of the State of Washington).
12. During construction of this work, the Permit Holder shall comply with all provisions of the WSDOT Highway Runoff Manual, or WSDOT approved equivalent plan, and implement Best Management Practices (BMP's) to mitigate erosion.

CULTURAL RESOURCES

13. If any archaeological or historical resources are revealed in the Work vicinity, the Permit Holder shall immediately STOP Work, notify WSDOT's Representative and retain a United States Government Secretary of the Interior's qualified archaeologist. Said archaeologist shall evaluate the site and make recommendations to WSDOT regarding the continuance of the Work.

COMPLIANCE WITH CLEARZONE GUIDELINES

14. The Permit Holder hereby agrees that the Work described in this permit is in compliance with WSDOT's Clear Zone Guidelines pursuant to Chapter 1600 of WSDOT's Design Manual (M 22-01) and any revisions thereto. For any Work performed on a managed access state highway within an incorporated city or town, the Permit Holder may use the applicable city or towns clear zone guidelines if the city or town has their own published clear zone guidelines.

PERMIT EXTENSION AND ASSIGNMENT

15. The expiration date of this Permit may not be extended without WSDOT's prior written approval.
16. This Permit shall not be deemed or held to be an exclusive one and shall not prohibit WSDOT from granting permits or franchise rights; or entering into other agreements with other public or private companies or individuals, nor shall it prevent WSDOT from using any of its highways, streets, or public places, or affect its right to full supervision and control over all or any part of them, none of which is hereby surrendered.

MAINTENANCE DEFICIENCIES

17. The Permit Holder shall correct any maintenance deficiency related to, or contributed to in any way by, the Work within thirty (30) consecutive calendar days upon receiving written notice of such deficiency from WSDOT, unless WSDOT authorizes in writing a different time period. Should the Permit Holder fail to correct a deficiency within the prescribed time period after receiving written notice of the deficiency from WSDOT, WSDOT reserves the right to perform the necessary maintenance work to preserve WSDOT right-of-way or upon state highway right-of-way under WSDOT jurisdiction or for the protection of the traveling public including bicycles or pedestrians. If WSDOT performs maintenance work as provided herein, the Permit Holder agrees to fully reimburse and make payment to WSDOT within thirty (30) calendar days of the date of WSDOT's detailed invoice pursuant to Section 26 – Invoice and Payments, herein. It WSDOT chooses not to make the repairs; WSDOT may initiate an action to revoke this Permit.

INTERFERENCE WITH OTHER PROJECTS

18. The Permit Holder agrees to schedule and perform the Work herein in such a manner as not to interfere with any WSDOT maintenance or other activities on WSDOT right-of-way or upon state highway right-of-way under WSDOT jurisdiction, including any WSDOT authorized construction activities that may be occurring in the general vicinity of the Work authorized by this Permit.

INSURANCE

19. Insurance (Applicable on a case by case basis)

    The Permit Holder shall provide proof of insurance coverage prior to performing any Work within State-owned highway right of way, as follows:

    - Commercial General Liability covering the risks of bodily injury (including death), property damage, and personal injury, including coverage for contractual liability, with a limit of not less than $5 million per occurrence and in the aggregate; OR
    - Business Automobile Liability (owned, hired, or non-owned) covering the risks of bodily injury (including death) and property damage, including coverage for contractual liability, with a limit of not less than $1 million per accident; OR
    - Employers Liability covering the risks of Permit Holder's employees' bodily injury by accident or disease, with limits of not less than $1 million per accident for bodily injury by accident and $1 million per employee for bodily injury by disease.

    WSDOT and the State shall be expressly named as an additional insureds under these general liability and automobile liability policies, by endorsing these policies with form CG2010 1185 or CA2048 (as appropriate), which shall contain no additional limitations with respect to completed operations or ongoing operations coverages, nor shall there be any limitation with respect to the negligence of WSDOT and the State. These policies shall be primary and non-contributory with respect to WSDOT and the State, and shall contain a waiver of subrogation in favor of WSDOT and the State. The Permit Holder shall furnish WSDOT proof of these insurance requirements prior to performing any Work under the Permit. A forty-five (45) calendar day written notice shall be given to the Department prior to termination of or any material change to the policy(ies) as such relate(s) to this Permit.

MODIFICATION OR REVOCATION OF THE PERMIT BY WSDOT

20a. Modification: If this Permit is modified in writing by WSDOT, the Permit Holder will have thirty (30) calendar days from the date of the written notice to modify the Work as required by WSDOT. If the modifications cannot be made within thirty (30) calendar days, the Permit Holder shall request from WSDOT, in writing, during the prescribed time period, an extension of time in which to make the modifications. Any extension of time shall be made in writing and is solely within WSDOT's discretion.

Should the Permit Holder breach any of the conditions or requirements of the permit or if WSDOT determines that emergency maintenance of the Work is required to (1) protect any aspect of the state highway right-of-way or upon state highway right-of-way under WSDOT jurisdiction, or (2) secure the safety of the traveling public due to a failure of the Permit Holder's Work or its maintenance thereof, WSDOT may perform the emergency maintenance work without the Permit Holder's prior approval, and the Permit Holder agrees to reimburse WSDOT's actual direct and related indirect costs and expenses for performing the emergency maintenance work pursuant to the provisions of Section 27 - Invoice and Payments. WSDOT will notify the Permit Holder of the emergency work performed as soon as practicable.

20b. Revocation: If the Permit is revoked and the Permit Holder fails to return the property back to its original condition, as solely determined by WSDOT, WSDOT shall perform such Work at the Permit Holder's sole cost and expense, and the Permit Holder shall reimburse WSDOT's actual direct and related indirect costs and expenses for performing the Work pursuant to the provisions of Section 27 - Invoice and Payments.

20c. Plan Corrections: WSDOT reserves the right to require changes or corrections due to plan omissions or details not in conformance with WSDOT's Standard Specifications, Standard Plans, Design Manual, or Project Special Provisions.

MODIFICATION OF THE PERMIT BY THE PERMIT HOLDER

21. If the Permit Holder desires to modify this permit and/or the Work, it shall notify the WSDOT Representative listed in Exhibit A, Special Provisions, in writing of all proposed changes for WSDOT's prior written approval. WSDOT agrees to provide written acceptance or rejection of the proposed change(s) to the Permit Holder within Ten (10) business days.

ADDITIONAL PERMIT CONDITIONS

22. The Permit Holder shall not excavate or place any obstacle within the limits of state highway right-of-way in such a manner as to interfere with WSDOT's construction, operation, and maintenance of the State Highway right-of-way or the public's travel thereon without WSDOT's prior written approval and/or as may be provided in this Permit.

23. Upon completion of all Work, the Permit Holder shall immediately remove all rubbish and debris from WSDOT right-of-way or upon state highway right-of-way under WSDOT jurisdiction, leaving WSDOT right-of- way in a neat, presentable, and safe condition, to WSDOT's sole satisfaction. Any Work-related rubbish and debris clean up, or any necessary slope treatment to restore and/or protect WSDOT right-of-way or upon state highway right-of-way under WSDOT jurisdiction, not done within seven (7) calendar days of Work completion, will be done by WSDOT at the expense of the Permit Holder, unless otherwise approved in writing by WSDOT prior to the expiration of the (7) day period.

    The Permit Holder agrees to reimburse WSDOT's actual direct and related indirect costs and expenses for performing the Work pursuant to the provisions of Section 27 - Invoice and Payments.

24. The Permit Holder agrees to maintain, at its sole expense, its Work under this Permit in a manner satisfactory to WSDOT, in WSDOT's sole discretion.

25. WSDOT shall in no way be held liable for any damage to the Permit Holder by reason of any such work by or authorized by WSDOT, its agents or representatives, or by the exercise of any rights by WSDOT upon roads, streets, public places, or structures in question.

EXTENSION OF THE EXPIRATION DATE

26. If requested by the Permit Holder, the Expiration Date of this Permit may be extended by WSDOT after review of the contributing circumstances.

INVOICE AND PAYMENTS

27. If WSDOT deems it necessary to perform Work as provided for in this Permit by WSDOT forces or its' contractor, including but not limited to any modification, repair, clean up or removal of the Work authorized under this Permit:

    a. WSDOT will assign a reimbursable account to the Permit Holder as a means of invoicing the Permit Holder for the costs associated with the Work performed by WSDOT.

    b. WSDOT will provide a detailed invoice, including direct and related indirect costs, to the Permit Holder for the Work performed by WSDOT or its contractor(s), and the Permit Holder agrees to pay WSDOT within thirty (30) calendar days of receipt of an invoice.

    c. The Permit Holder agrees that if payment is not made to WSDOT as herein agreed, WSDOT may charge late fees, interest and/or refer the debt to a Collection Agency, all in accordance with Washington State Law.

OTHER PERMITS AND APPROVALS

28. The Permit Holder shall be responsible for securing all necessary permits, including but not limited to, federal, state, and local regulatory, tribal, environmental, archeological, and railroad permits and permits from the Washington State Department of Ecology, the Washington State Department of Fish and Wildlife, and/or the U.S. Army Corps of Engineers prior to beginning the Work authorized by this Permit. The Permit Holder shall be responsible for mitigation measures where wetlands have been disturbed and agrees that it is solely responsible for any fines imposed for noncompliance with the permit(s) conditions or for failure to obtain the required permits. In addition, the Permit Holder, on behalf of itself and its contractors, officers, officials, employees, and agents, agrees to indemnify, hold harmless, and defend, at its sole cost and expense, WSDOT and its officers, officials, employees, and agents from any and all fines, costs, claims, judgments, and/or awards of damages to regulatory agencies, persons, and/or property, arising out of, or in any way resulting from, the Permit Holder's failure to (1) obtain any required permit for the Permit Holder Work or (2) comply with permit conditions.

INDEMNIFICATION, WAIVER, VENUE, AND ATTORNEYS FEES

29. The Permit Holder, its successors and assigns, shall indemnify, defend at its sole cost and expense, and hold harmless the State of Washington, its officers, employees, and agents from all claims, suits, demands, actions for damages (both to persons and/or property), expenses, regulatory fines, and/or suits in law and in equity that (1) arise out of or are incident to, or alleged to arise out of or are incident to, any acts or omissions of the Permit Holder, its agents, contractors, subcontractors, employees, invitees, successors, assigns and/or any other person in the use of the WSDOT-owned highway right-of-way or upon state highway right-of-way under WSDOT jurisdiction as authorized by the terms and conditions of this Permit, or (2) are caused by the breach of any of the terms or conditions of this Permit by the Permit Holder, its successors and assigns, and its contractors, subcontractors, agents, employees, invitees and/or any other person. The Permit Holder, its successors and assigns, shall not be required to indemnify, defend, or hold harmless the State of Washington, its' officers, employees and/or agents, if the claim, suit, or action for damages (both to persons and/or property) is caused by the sole acts or omissions of the State of Washington, its' officers, employees and/or agents; provided that, if such claims, suits, or actions result from the concurrent negligence of (1) the State of Washington, its officers, employees and/or agents, and (2) the Permit Holder, its agents, contractors, subcontractors, employees, invitees, successors, assigns and/or any other person or involves those actions covered by RCW 4.24.115, the indemnity provisions provided herein shall be valid and enforceable only to the extent of the acts or omissions of the Permit Holder, its agents, contractors, subcontractors, employees, invitees, successors, assigns and/or any other person.

30. The Permit Holder agrees that its obligations under this Permit extend to any claim, demand, and/or cause of action brought by, or on behalf of, any of its' employees or agents while performing Work under this Permit while located on or off WSDOT-owned highway right of way or upon state highway right of way under WSDOT jurisdiction. For this purpose, the Permit Holder, by mututal negotiation, hereby waives, with respect to the State of Washington only, any immunity that would otherwise be available to it against such claims under the Industrial Insurance provisions in chapter 51.12 RCW.

31. The indemnification and waiver provided for in Sections 29 and 30 shall survive the termination of this Permit.

32. In the event that the Permit Holder or WSDOT deems it necessary to institute legal action or proceedings to enforce any right or obligation under this Permit, the Permit Holder and WSDOT agree that any such action or proceedings shall be brought in the superior court situated in Thurston County, Washington. Further, the Permit Holder agrees that it shall be solely responsible for its own attorney's fees and costs and agrees that it shall not seek nor be entitled to recovery of such attorney's fees and costs.

NONAPPLICABILITY OF RELOCATION ASSISTANCE/EMINENT DOMAIN

33. The Permit Holder acknowledges that this Permit does not at any time entitle the Permit Holder, its successors or assigns, to assistance under the Relocation Assistance - Real Property Acquisition Policy (Chapter 8.26 RCW). Further, the revocation or other termination of this Permit shall not be deemed a taking by WSDOT under the laws of eminent domain.

SPECIAL PROVISIONS

County Projects on State Highways
City Projects on Limited Access State Highways

Agreement Number: NWS-2575-MLT

The Agreement and these Special Provisions apply to all construction items within WSDOT jurisdiction and maintenance responsibility only.

Applicable provisions are denoted by (☒)

☒ **1. WSDOT REPRESENTATIVE/NOTICE TO PROCEED.** *(Applicable to ALL Projects)*
No Improvements provided for herein shall be performed until the Agency is authorized by the following WSDOT representative:

Mike Rudd, WSDOT Construction Representative
WSDOT Northwest Region NB82-240
15700 Dayton Avenue North
PO Box 330310
Seattle WA 98133-9710
206-327-1877
RUDDMIC@wsdot.wa.gov

☒ **2. PLAN CHANGES** *(Applicable to ALL Projects)*

- **AGENCY CHANGE ORDERS / ADDENDAS.** Changes to any previously Approved Plans affecting WSDOT-owned highway right-of-way or highway right-of-way under WSDOT jurisdiction must be reviewed and approved in writing by WSDOT prior to execution and implementation.

- **WSDOT REQUIRED CHANGES OR CORRECTIONS.** WSDOT reserves the right to require changes or corrections due to plan omissions or details not in conformance with WSDOT's Standard Specifications, Standard Plans, Design Manual-Design Standards and/or Project Special Provisions.

☒ **3. DELAY TO WSDOT CONTRACTS** *(Applicable to ALL Projects).* The Agency agrees to schedule and perform the Improvements herein in such a manner as not to delay WSDOT's contractor in the performance of any WSDOT contract in the area. WSDOT shall in no way be held liable for any damage to the Agency or the Agency's contractor, by reason of any such work by WSDOT, its agents or representatives, or by the exercise of any rights by WSDOT upon any applicable roads, streets, public places, or structures.

☒ **4. AMERICANS WITH DISABILITIES ACT (ADA) STANDARDS** *(Applicable to ALL New Construction and Alteration Projects).* All public entities are required to follow *the Americans with Disabilities Act of 1990* (ADA), regardless of funding sources. Wherever pedestrian facilities are intended to be a part of the transportation facility, federal regulations require that those pedestrian facilities meet ADA standards. All new construction or alteration of existing transportation facilities must be designed and constructed to be accessible to and usable by persons with disabilities per Title II of the ADA (28 CFR Part 35.151) and Section 504 regulations (49 CFR Part 27.7(c)).

Neither cost nor schedule are factors in determining whether the ADA standards can be met, nor are they factors in determining the feasibility of complying with the standard. An alteration project must be planned, designed, and constructed so that the required accessibility improvements occur at the same time as the alteration.

The following are not considered Alteration Projects: Spot Pavement Repair, Liquid-Asphalt Sealing, Chip Seal (BST), Crack Sealing, and Lane Restriping that does not alter the usability of the shoulder.

If there is uncertainty as to whether a project meets the definition of an alteration project, WSDOT's Construction Representative and the Agency's Representative shall consult with WSDOT's Regional ADA Coordinator.

If a situation is encountered where it may not be possible to fully meet the applicable accessibility requirements during alterations of existing facilities, WSDOT's Construction Representative and the Agency's Representative shall consult with WSDOT's Regional ADA Coordinator in order to develop a workable solution to meet the accessibility requirements to the maximum extent feasible (MEF).

☒ **5. TRAFFIC CONTROL AND PUBLIC SAFETY** *(Applicable to all City Projects within Limited Access Areas and/or City Projects within Managed Access Areas involving WSDOT maintained Traffic Signals, Freeway Ramps, or Ferry Traffic. Applicable to all other City Projects when WSDOT assistance is requested by the City. Applicable to all County Projects)*

- **TRAFFIC CONTROL PLANS (TCPs).** Prior to construction and/or maintenance of this facility, the Agency shall submit Traffic Control Plans to WSDOT for Review and Approval at least ten (10) days in advance of the time that signing and other traffic control devices will be required. These TCPs shall be in compliance with The Manual on Uniform Traffic Control Devices (MUTCD) for Streets and Highways – Part 6 (Temporary Traffic Control) https://mutcd.fhwa.dot.gov/pdfs/2009r1r2/part6.pdf and Washington modifications thereto. All TCPs shall be site specific, unless allowed otherwise by WSDOT.

- **MODIFICATION OR REVOCATION OF APPROVED TRAFFIC CONTROL PLANS.** WSDOT reserves the right to modify or revoke any Traffic Control Plan at any time due to unexpected emergencies or safety and operational problems for the traveling public. All costs and

time delays associated with modification or revocation shall be borne by the Agency. WSDOT shall in no way be held liable for any delays, costs, or other damages to the Agency by reason of any such WSDOT action.

- **PERMITTED HOURS FOR LANE CLOSURES / WSDOT NOTIFICATION.** The working hours within State owned highway right-of-way or highway right-of-way under WSDOT jurisdiction for this project are restricted per the Approved Traffic Control Plan(s). Any extension of these hours must be requested in writing and approved by the WSDOT in writing prior to construction. Weekend or Holiday (including Canadian Holidays-Skagit & Whatcom Counties) work is not permitted without prior written permission from the WSDOT. Five (5) working days written notification shall be given to the WSDOT's Representative prior to any lane closure.

- **SUSPENSION OF TRAFFIC CONTROL OPERATIONS.** WSDOT reserves the right to suspend all lane and shoulder closure operations due to unexpected emergencies or impediments to the flow of traffic. All costs associated with this suspension shall be borne by the Agency or their contractor.

- **HAZARD PROTECTION.** All hazards to vehicular, pedestrian, and bicycle traffic shall be marked by warning signing, barricades, and lights.

- **STORAGE OF EQUIPMENT AND MATERIALS.** All lanes shall be open and the shoulders shall be clear of construction equipment and materials during non-working hours. The Work Zone Clear Zone (WZCZ) applies during working and non-working hours. The WZCZ applies only to temporary roadside objects introduced by the Agency's operations and does not apply to pre-existing conditions or permanent Improvements. Those operations that are actively in progress shall be in accordance with adopted and approved Traffic Control Plans, and other Contract or Agreement requirements.

  During nonworking hours, equipment or materials shall not be within the WZCZ unless they are protected by guardrail or barrier. The use of temporary concrete barrier shall be permitted only if WSDOT approves the installation and location.

  During actual hours of work, unless protected as described above, only materials absolutely necessary to construction shall be within the WZCZ and only construction vehicles absolutely necessary to construction shall be allowed within the WZCZ or allowed to stop or park on the shoulder of the roadway.

  Non-essential vehicles and employees' private vehicles shall not be allowed to park within the WZCZ at any time unless protected as described above.

  Deviation from the above requirements shall not occur unless the Contractor has requested the deviation in writing, and WSDOT has provided written approval.

☒ **6. TRAFFIC CONTROL SUPERVISOR** *(Applicable to City Projects within Limited Access Areas; and/or City Projects within Managed Access Areas involving WSDOT maintained Traffic Signals, Freeway Ramps, or Ferry Traffic. Applicable to all County Projects).* The Agency or their Prime Contractor shall employ an individual or individuals to perform the duties of Full-Time Traffic Control Supervisor (TCS), certified by WSDOT. The TCS shall be responsible for safe implementation of Approved Traffic Control Plans. The TCS shall be present on the project whenever flagging, spotting, or other traffic control is being utilized. The TCS shall be responsible for having a current set of approved Traffic Control Plans, inspecting traffic control devices and nighttime lighting for proper location, installation, message, cleanliness, and effect on the traveling public. Traffic control devices shall be inspected at least once per hour during working hours. The TCS shall correct, or arrange to have corrected, any deficiencies noted during these inspections. The Agency or Prime Contractor shall maintain 24-hour telephone numbers at which the TCS can be contacted and be available on the job site within 45 minutes after notification from the WSDOT Representative at other than specified working hours.

☒ **7. WORKER VISIBILITY** *(Applicable to Counties and Limited Access in All Cities)*

- **FLAGGER APPAREL.** Traffic Control Supervisors, Flaggers, Spotters, and others performing Traffic Control Labor of any kind shall comply with the following: (1). During daylight hours with clear visibility, workers shall wear a high-visibility ANSI/ISEA 107-2015 Class 2 or 3 vest or jacket, and hardhat meeting the high-visibility headwear requirements of WAC 296-155-305; and (2). During hours of darkness (½ hour before sunset to ½ hour after sunrise) or other low visibility conditions (snow, rain, fog, etc.), workers shall wear a high-visibility ANSI/ISEA 107-2015 Class 2 or 3 vest or jacket, high-visibility lower garment meeting ANSI/ISEA 107-2015 Class E, and headwear meeting the high-visibility headwear requirements of WAC 296-155-305.

- **APPAREL - OTHER CONTRACTOR PERSONNEL.** The Agency and/or the Contractor shall require all other personnel in WSDOT-owned highway right-of-way or highway right-of-way under WSDOT jurisdiction under their control (including Service Providers, Subcontractors, and lower tier Subcontractors) that are on foot in the Work zone and are exposed to vehicle traffic or construction equipment to wear the high-visibility apparel meeting Performance Class 2 or 3 requirements of the ANSI/ISEA 107-2015 publication titled "American National Standard for High Visibility Safety Apparel and Headwear".

☐ **8. MATERIALS AND QUALITY ASSURANCE / QUALITY CONTROL (QA/QC)** *(Applicable to ALL Projects)*

- **MATERIALS AND WORKMANSHIP.** All materials and workmanship shall conform to the Washington State Department of Transportation Standard Specifications for Road, Bridge and Municipal Construction, current edition, and amendments thereto, and shall be subject to inspection by WSDOT.

- **APPROVAL OF MATERIALS –**

  REQUEST for APPROVAL of MATERIALS (RAM). The RAM shall be prepared by the Contractor or Agency in accordance with the instructions on Form 350-071 and submitted to WSDOT's Construction Representative for approval before the material is incorporated into the Improvements. All material, including proposed Aggregate Sources, shall be listed on the RAM Form. Approval of the material does not constitute acceptance of the material for incorporation into the Improvements. Additional acceptance actions as noted on the RAM

need to be completed prior to the materials being incorporated into the Improvements. When requesting approval of an item that requires fabrication, both the fabricator and the manufacturer of the base material shall be identified on the RAM.

QUALIFIED PRODUCTS LIST (QPL). The most current QPL list available at the time the product is proposed for use shall be used. The QPL submittal shall be prepared by the Contractor or Agency in accordance with the instructions in the QPL and submitted to WSDOT's Construction Representative prior to use. The QPL identifies the approved products, the applicable Specification Section, and the basis for acceptance at the project level. The acceptance and use of these products is based upon additional job sampling and/or documentation. All additional acceptance actions need to be completed prior to the material being incorporated into the Improvements. Qualified products not conforming to the Specifications, not fulfilling the acceptance requirements, or improperly handled or installed, shall be replaced at the Contractor's expense. If there is a conflict between the QPL and the Contract, the provisions of the Contract shall take precedence over the QPL. The current QPL can be accessed online at www.wsdot.wa.gov/biz/mats/qpl/qpl.cfm.

AGGREGATE SOURCE APPROVAL (ASA). All aggregates proposed for use on the project shall be from Pre-Approved WSDOT Sources. Pre-Approved Sources can be found on WSDOT's ASA database which contains results of WSDOT preliminary testing of aggregate sources. The ASA database can be accessed online at the agency website at: http://www.wsdot.wa.gov/biz/mats/ASA/ASASearch.cfm. This database is used by WSDOT to indicate the approval status of these aggregate sources for applications that require preliminary testing as defined in the Contract. The ASA '*Aggregate Source Approval Report'* identifies the currently approved applications for each aggregate source listed. The acceptance and use of these aggregates is contingent upon additional job sampling and/or documentation. Aggregates approved for applications on the ASA '*Aggregate Source Approval Report'* not conforming to the Specifications, not fulfilling the acceptance requirements, or improperly handled or installed, shall be replaced at the Contractor's or Local Agency's expense.

- **MATERIALS TESTING/REPORTING OF RESULTS.** All materials testing is to be performed by the Agency or an Independent Certified Testing Laboratory of their choice. Copies of all test results shall be submitted to WSDOT's Construction Representative prior to beginning the next phase of construction. WSDOT reserves the right to verify the test results or to perform the testing.

- **HOT MIX ASPHALT (HMA) DESIGN.** Prior to Paving Operations, the Agency shall submit WSDOT approved HMA Mix Design(s) from WSDOT's Qualified Products List (QPL) for use on this project.

- **PAVING OPERATIONS.** NO PAVING OPERATIONS WILL BE PERMITTED WHEN IT IS RAINING or SNOWING. Written permission from WSDOT's Construction Representative shall be required if paving operations begin before April 1st, or after October 1st. Surface temperature and other paving limitations as per WSDOT Standard Specifications shall be enforced.

- **MATERIAL TRANSFERING DEVICE / VEHICLE.** Direct transfer of HMA from the hauling equipment to the paving machine will not be allowed in the top 0.30 feet of the pavement section of hot mix asphalt (HMA) used in traffic lanes with a depth of 0.08 feet or greater. A material transfer device or vehicle (MTD/V) **shall** be used to deliver the HMA from the hauling equipment to the paving machine. HMA for pre-leveling, pavement repair, or HMA placed in irregularly shaped and minor areas such as road approaches, tapers, and turn lanes are excluded from this requirement. At the Contractor's request, WSDOT's Construction Representative ***may*** approve paving without an MTD/V. The MTD/V shall mix the HMA after delivery by the hauling equipment and prior to laydown by the paving machine. Mixing of the HMA shall be sufficient to obtain a uniform temperature throughout the mixture. If a windrow elevator is used, the length of the windrow may be limited in urban areas or through intersections, at the discretion of WSDOT's Construction Representative.

- **ROLLERS.** The type of rollers to be used and their relative position in the compaction sequence shall generally be the Contractor's option, provided the specified densities are attained. An exception shall be that pneumatic tired rollers shall be used for compaction of the wearing course beginning October 1st of any year through March 31st of the following year. Coverage with a steel wheel roller may precede pneumatic tired rolling. Operation of the roller shall be in accordance with the manufacturer's recommendations. The use of equipment that results in crushing of the aggregate will not be permitted. Rollers producing pickup, washboard, uneven compaction of the surface, or displacement of the mixture, or other undesirable results shall not be used.

- **JOINT SEALING.** All joints between existing and new pavement; or other cracks requiring repair shall be adequately cleaned and then sealed with PG 67-22 Liquid Asphalt in accordance with the manufacturer's recommendations. Filling shall be controlled to confine the material within the crack or joint. If, in the opinion of WSDOT's Construction Representative, the Contractor's method of filling results in an excessive amount of sealant on the pavement surface, filling shall be stopped and the method changed. Any overflow shall be cleaned from the pavement surface.

- **QUALIFICATION of CONCRETE SUPPLIERS.** Concrete Batch Plant Prequalification requires a certification by the National Ready Mix Concrete Association (NRMCA). A copy of that Certificate shall be submitted to WSDOT's Construction Representative prior to placement of cement concrete.

- **CONCRETE MIX DESIGN.** Prior to any placement of cement concrete, the Agency shall submit WSDOT approved Mix Design(s) for use on this Project to WSDOT's Construction Representative.

- **DRAINAGE STRUCTURES.** Only structures stamped APPROVED by the STATE's Materials and Fabrication Inspection Office shall be used on this project.

☒ **9. UNSUITABLE MATERIALS** *(Applicable to ALL Projects).* If determined necessary by WSDOT, unsuitable material encountered during any excavation shall be removed and replaced to the satisfaction of WSDOT at the Agency's expense. The replacement material shall be free-draining and granular, or other materials as determined by WSDOT's Construction Representative in accordance with the Standard Specifications.

☒ **10. EROSION CONTROL / DRAINAGE** *(Applicable to Counties and Limited Access in All Cities).*

- **BEST MANAGEMENT PRACTICES (BMP'S)**
  During construction of this project, the Agency shall comply with all provisions of the WSDOT Highway Runoff Manual or equivalent WSDOT approved plan and implement Best Management Practices (BMP's) as detailed in the manual to mitigate erosion.

- **WATER DISCHARGES ON THE PROJECT.** All discharges to WSDOT-owned highway right-of-way or highway right-of-way under WSDOT jurisdiction, if allowed on this project, shall conform to STATE and Local water quality regulations and shall meet WAC 173-201A (Water Quality Standards for Surface Waters of the State of Washington).

☒ **11. INTERFERENCE TO WSDOT HIGHWAY DRAINAGE** *(Applicable to Counties and Limited Access in All Cities).* If the Improvements done under this Agreement interferes in any way with the drainage of WSDOT highway, the Agency shall wholly and at its own expense make such provision - as WSDOT may direct, to address the said drainage.

☒ **12. DRAINAGE AND UTILITY CONSTRUCTION (***Applicable to Counties and Limited Access in All Cities)*

- **PIPE END TREATMENT.** All culvert pipes shall have beveled end sections and quarry spalls shall be placed around end of pipes in the bottom of the ditch, and on the side of the slopes.

- **UTILITY COVER ELEVATION.** All manholes, valve covers, and like appurtenances shall be constructed at such an elevation to conform to the shoulder slope from the edge of pavement or as directed by WSDOT.

- **DRAINAGE STRUCTURES.** Only structures stamped APPROVED by WSDOT's Fabrication Inspection Office shall be used on this project.

☒ **13. LANDSCAPING ON WSDOT RIGHT-OF-WAY** *(Applicable to Counties and Limited Access in All Cities)*

- **PLANTINGS.** If the Agency desires to plant and/or cultivate any shrubs, trees, hedges, or other domestic or native ornamental growth on WSDOT-owned highway right-of-way that is more extensive than regular WSDOT vegetation, the Agency shall obtain a Roadside Vegetation Permit (DOT Form 220-018) from WSDOT for the maintenance of the plantings.

- **IRRIGATION SYSTEMS.** If the Agency desires to install an irrigation system, the Agency may be required to obtain additional approval. The Agency shall be responsible for water and electrical costs.

☐ **14. DISTURBANCE OF EXISTING RIGHT-OF-WAY VEGETATION** *(Applicable to Counties and Limited Access in All Cities).* Unless otherwise authorized by WSDOT's representative in writing prior to the start of any Improvements, this Agreement does not authorize the Agency, its' employees, contractors, or agents, any right to cut, spray, retard, remove, destroy, disfigure, or in any way modify the physical condition of any vegetative or landscaping material located on WSDOT-owned highway right-of-way or upon state highway right of way under WSDOT jurisdiction. Should the Agency anticipate that its' Improvements will alter the appearance of WSDOT-owned Highway right-of-way vegetation or landscaping, the Agency shall notify the Department Representative listed in Special Provision 1 to obtain WSDOT's prior written approval of the Agency's proposed Improvements. If WSDOT allows the Agency to modify WSDOT-owned highway right-of-way vegetation, it agrees that any vegetation cutting and/or trimming activities shall be conducted in such a manner that WSDOT-owned Highway right-of-way vegetation and landscaping appearance or functionality will not be altered or damaged. Should the Agency damage or alter the appearance of WSDOT-owned Highway right-of-way vegetation or landscaping without WSDOT's prior written approval, the Agency is subject to penalties provided for in RCW's 47.40.070, 47.40.080, and 4.24.630, as applicable.

☒ **15. RIGHT-OF-WAY RESTORATION** *(Applicable to Counties and Limited Access in All Cities).* Upon completion of all Improvement's, the Agency shall immediately remove all rubbish, scraps, brush, timber, waste materials, or other debris etc. from WSDOT-owned highway right of way, leaving the right of way in a safe, neat, and presentable condition to the WSDOT's sole satisfaction. The aesthetics of the right-of-way shall be as it was before the work started, or better. In addition, all WSDOT owned and maintained drainage systems must be, cleared of obstructions, restored, and fully operational. Any work-related clean up, restoration, necessary slope treatment / protection, or drainage restoration of WSDOT-owned right of way not completed within seven (7) calendar days of work completion, unless WSDOT approves otherwise in writing, will be performed by WSDOT at the Agency's expense. The Agency agrees to reimburse WSDOT's actual direct and related indirect costs and expenses for performing the Improvements pursuant to the provisions of Section 7.0 - Payment.

☐ **16. SEVERANCE AND SALE OF TIMBER AND OTHER PERSONALTY — REMOVAL OF NON-MARKETABLE MATERIALS** (*Applicable to Counties and Limited Access in All Cities).* This Agreement is subject to RCW 47.12.140, and amendments thereto. This Agreement does not authorize the Agency, its' employees, contractors, or agents, any right to cut or remove any trees or timber located on WSDOT right-of way or upon state highway right of way under WSDOT jurisdiction without prior written approval from WSDOT.

☒ **17. MAINTENANCE OF LANDSCAPING** *(Applicable to Cities ONLY).* The Agency is responsible for the maintenance of all landscaping beyond the back of the curbs or edge of pavement, and in the median of divided highways.

☐ **18. ILLUMINATION CONSTRUCTION / INSPECTION** ***(****Applicable to Counties and Limited Access in All Cities)*

- **CONSTRUCTION.** The Agency shall assure that the construction of all illumination installed within WSDOT-owned highway right-of-way or highway right-of-way under WSDOT jurisdiction meets all requirements of WSDOT.

- **ILLUMINATION DURING CONSTRUCTION.** Pre-existing illumination shall be maintained and functional at all times during construction until the new illumination is operational.

☐ **19. TRAFFIC SIGNAL CONSTRUCTION / INSPECTION** *(Applicable to City Projects within Limited Access Areas, Projects within Cities < 27,500 Population, and all County Projects).*

- **DESIGN/CONSTRUCTION/INSPECTION.** The Agency shall assure that the design and construction of Traffic Signals and illumination on signal poles installed within WSDOT Highway right-of-way meets all requirements of WSDOT.

- **TRAFFIC SIGNAL STANDARDS – APPROVAL.** Traffic signal standards shall be furnished and installed in accordance with the methods and materials noted in the applicable Standard Plans, pre-approved plans, or special design plans. If the proposed signal standards are not on WSDOT's PRE-APPROVED LIST (http://www.wsdot.wa.gov/eesc/bridge/lightsignalstandards/index.cfm), Signal Pole Shop

Drawings (Electronically, or Seven (7) sets of copies) shall be submitted to WSDOT's Construction Representative for transmittal to HQ for approval.

- **ILLUMINATION DURING CONSTRUCTION.** Pre-existing illumination shall be maintained and functional at all times during construction until the new illumination is operational.

- **TEMPORARY VIDEO DETECTION SYSTEM.** If any traffic detection loop is scheduled to be disabled, a temporary video detection system shall be completely installed and made operational prior to any associated induction loop being disabled.

- **TRAFFIC DETECTION LOOPS.** The Contractor shall notify the Area Traffic Engineer through WSDOT's Construction Representative a minimum of five working days in advance of pavement removal or grinding in areas with existing loops.

  All new traffic detection loops shall be installed after grinding or prior to paving the final lift of asphalt unless otherwise approved in writing by WSDOT's Construction Representative.

  If WSDOT's Construction Representative suspects that damage to any traffic detection loop, not identified in the Plans as being replaced, may have resulted from Contractor's operations or is not operating adequately, WSDOT's Construction Representative may order the Contractor to perform the field tests specified in Section 8 20.3(14) D. The test results shall be recorded and submitted to WSDOT's Construction Representative. Loops that fail any of these tests shall be replaced.

  Traffic detection loops that fail the tests, as described above, and are replaced shall be installed in accordance with current WSDOT design standards and Standard Plans, as determined by WSDOT's Construction Representative.

  If traffic detection loops that fail the tests, as described above, are not replaced and operational within 48 hours, the Contractor shall install and maintain interim video detection until the replacement loops are operational. The type of interim video detection furnished shall be approved by WSDOT's Construction Representative prior to installation.

- **TRAFFIC SIGNAL HEADS.** Unless approved in writing by WSDOT's Construction Representative, signal heads shall not be installed at any intersection until all other signal equipment is installed and the controller is in place, inspected, and ready for operation at that intersection, except that the signal heads may be mounted if the faces are covered with Signal Head Covering Material.

- **SIGNAL HEAD COVERING.** The signal head covering material shall be manufactured from a durable fabric material, black in color with a mesh front, and designed to fit the signal head configuration properly. The covers shall have an attachment method that will hold the cover securely to the signal in heavy wind. The covers shall be provided with a drain to expel any accumulated water.

- **TRAFFIC SIGNAL PRE-TURN-ON COORDINATION MEETING AND TESTING.** Prior to a Traffic Signal Turn-on event, the Agency/Contractor shall conduct a Pre Turn-on coordination meeting with the following Contracting Agency personnel included as invited attendees: WSDOT's Construction Representative, Electrical Inspector, Signal Operations Engineer, and Signal Maintenance Technician. The Agency/Contractor shall provide the Engineer a minimum of 5 days written notice of the proposed Pre Turn-on coordination meeting date and time. Prior to the Pre Turn-on coordination meeting, the Agency/Contractor shall complete the items of Improvements detailed in the Traffic Signal Turn-on Checklist and submit the completed checklist to WSDOT's Construction Representative. The Traffic Signal Turn-on Checklist form will be furnished to the Agency/Contractor by WSDOT's Construction Representative.

  Unless approved by WSDOT's Construction Representative, the permitted hours for Pre-Turn-On coordination and testing shall be per the Approved Traffic Control Plan(s) for the specific operation.

- **TRAFFIC SIGNAL TURN-ON AND/OR SWITCHOVER OPERATIONS.** The Agency shall contact WSDOT's Construction Representative at least five (5) working days prior to scheduling a signal turn-on in order to assure that all appropriate items on WSDOT's "Traffic Signal Turn-On Checklist" are satisfactorily addressed. The Signal Turn-On or Switchover shall not occur until all applicable Checklist items are installed and/or connected. This Checklist can be located on WSDOT's web site at: http://www.wsdot.wa.gov/Northwest/DevelopmentServices/LocalAgency.htm *(Go to: "What is needed to turn on a traffic signal?")*. Prior to scheduling a turn-on date, the Agency/Contractor shall provide verification to WSDOT Construction Representative that all required testing has been satisfactorily completed.

  The traffic signal turn-on procedure shall not begin until all required channelization, pavement markings, illumination, signs, and sign lights are substantially complete and operational unless otherwise allowed by WSDOT's Construction Representative.

  If the Contractor is directed to turn off the traffic signal, the Contractor shall schedule a new turn-on date with the Engineer in accordance with the previously mentioned procedures.

- **PERMITTED HOURS FOR SIGNAL TURN-ON AND/OR SWITCH-OVER OPERATIONS.** Unless approved by WSDOT's Construction Representative, the permitted hours for Traffic Signal Turn-on or Switch-Over shall be per the Approved Traffic Control Plan(s) for the specific operation. Signal Switchover and Turn-On operations are permitted only on Tuesday, Wednesday, or Thursday – except in the case of an emergency. No Switchover or Turn-On operations will be permitted on Monday, Friday, weekends, holidays, or the day preceding a holiday.

- **NEW SIGNAL AHEAD/SIGNAL REVISION WARNING SIGNING.** – "NEW SIGNAL AHEAD" (W20-902) or "SIGNAL REVISION AHEAD" (W20-903)signs shall be installed in advance of all affected directions of travel on the Project when a new traffic signal system is installed or when modifications to and existing signal are made. The location of the signs shall be per Section 2C.05 of the MUTCD, or as directed by WSDOT's Construction Representative. These signs are 48" X 48" black letters on orange background, and shall be post mounted. The bottom of the sign shall be mounted seven (7) feet above the pavement elevation. Each sign shall have three (3) 12" by 12" Fluorescent Orange flags or Flag Signs mounted on both sides and on top of the sign. The flags signs shall be made of aluminum, durable cloth, or plastic. The signs and flags shall stay erect for six to eight weeks or as directed by WSDOT's Construction Representative.

☐ **20. INTELLIGENT TRANSPORTATION SYSTEM CONSTRUCTION/INSPECTION** *(Applicable to City Projects within Limited Access Areas, Projects within Cities < 27,500 Population, and all County Projects).* The Agency shall assure that the construction of Intelligent Transportation Systems owned by WSDOT meets all requirements of WSDOT.

☐ **21. SIGN INSTALLATION AND MAINTENANCE** *(Applicable to ALL Projects).* All Directional, Regulatory, and Stop Signs as well as Route Markers shall be installed as per the Approved Plans, WSDOT Standard Plans, or as directed by WSDOT's Construction Representative. The DEPARTMENT shall own and maintain these signs- unless the Agency signs a Contract or Maintenance Agreement with WSDOT to perform sign maintenance.

☐ **22. TRAFFIC REVISION WARNING SIGNING** *(Applicable to ALL Projects).* When the permanent channelization of the highway is changed, "TRAFFIC REVISION AHEAD" (W20-901) signs shall be installed in advance of all affected directions of travel of the Project. The location of the signs shall be per Section 2C.05 of the MUTCD, or as directed by WSDOT's Construction Representative. These signs are 48" X 48" black letters on orange background, and shall be post mounted. The bottom of the sign shall be mounted seven (7) feet above the pavement elevation.

☐ **23. REMOVAL OF PAVEMENT MARKINGS** *(Applicable to ALL Projects).* Pavement markings to be removed shall be obliterated until blemishes caused by the pavement marking removal conform to the coloration of the adjacent pavement. Grinding to remove painted markings is only allowed prior to application of a Bituminous Surface Treatment (BST). Grinding to remove pavement markings from hot mix asphalt and cement concrete pavements is allowed to a depth just above the pavement surface, then water blasting or shot blasting shall be required to remove the remaining markings. If in the opinion of WSDOT's Construction Representative the pavement is materially damaged by pavement marking removal, such damage shall be repaired by the Contractor in accordance with Section 1-07.13(1). Sand or other material deposited on the pavement as a result of removing lines and markings shall be removed as work progresses to avoid hazardous conditions. Accumulation of sand or other material which might interfere with drainage will not be permitted.

☐ **24. APPLICATION OF CHANNELIZATION PAVEMENT MARKINGS** *(Applicable to City Projects within Limited Access Areas, Projects within Cities < 27,500 Population, and all County Projects).* Two applications of paint shall be required for all paint stripe markings as per the WSDOT Standard Specifications. Plastic Pavement Markings shall also be applied per the WSDOT Standard Specifications.

☒ **25. NON-PAYMENT OF REIMBURSABLE ACCOUNT** *(Applicable to ALL City Projects).* The Agency agrees that if it does not make payment for any WSDOT work, as provided herein, within ninety (90) calendar days after receipt of a WSDOT invoice, WSDOT may deduct and expend any monies to which the Agency is entitled to receive from the Motor Vehicle Fund as provided by RCW 47.24.050.

☒ **26. ADVERTISING SIGNS** *(Applicable to Counties and Limited Access in All Cities).* Any advertising adjacent to WSDOT Highways must be in compliance with the Scenic Vistas Act of 1971, Chapter 47.42 RCW and Chapter 468-66 WAC. Violation of this section of the statutes will be sufficient cause for cancellation of this Agreement. Advertising signs are allowed off WSDOT Highway right-of-way, subject to Local Codes and Regulations.

Docusign Envelope ID: F922A37B-A42F-42D6-9A96-09B1A7B7ED2E

P.I. STATION	Δ	CA	CURVE DATA D	R	T	L	SPIRALS BACK & AHEAD a	DE	Ls
L 339+45.21	9°13' 30"		0°45'	7639.44'	616.33'	1230.00'			
L 341+16.44	"		"	"	"	"			
LR 342+87.67	"		"	"	"	"			

FED. ROAD DIV. NO.	STATE	FED. AID PROJ. NO.	FISCAL YEAR	SHEET NO.	TOTAL SHEETS
10	WASH.	I-5-4(C)(M)5			

T 27 N. R 4 E. W.M.

MOUNTLAKE TERRACE

MOUNTLAKE TERRACE

LEGEND

- Access To Be Prohibited Shown Thus
- Property Ownership Numbers (1-607)
- Property Lines
- Beautification Ownership B1-1134

Coordinate System Used — Lambert North Zone

64TH AVE. W.

234TH PL. S.W.

233RD PL. S.W.

234TH ST. S.W.

DIV. 46

FOR RELINQUISHMENT TO CITY Conveyed to Mountlake Terrace by deed 8-26-80

X2 10+00 Cons. Sta. 2382.89 = X1 12+64.53

LIMITS

TURNBACK LINE

L 342+50

(1-1126)

NE¼ SE¼ Sec. 32

MOUNTLAKE TERRACE CORPORATE

L 332~

L PC 333+28.88

L PC 336+34

L PC 335+00

AL² - LINE 340~

130'

370'

236TH ST. S.W.

UNDERCROSSING

L POC 343+54.74

X2-POT 17+04.69

Y 289,865.76

X 1,635,729.51

SB Bus Lane

340

N9°58'00"E

CD LINE

L PI 339+45.21

Y 289,461.98

X 1,635,671.50

L PI 341+16.44

Y 289,624.56

X 1,635,735.61

LR PI 342+87.67

Y 289,787.15

X 1,635,799.71

LR 342+00

MEDIAN CROSSOVER

(1-1167)

(1-1167A)

AR² - LINE 340~

INTERCHANGE

L 336+70.44

Approximate Permit Area

CONSTRUCTION EASEMENT

EVERGREEN ELEMENTARY SCHOOL

TURNBACK LINE

Pac. Tel. Manhole

Underground Cable

Pac. T&T Manhole

CORPORATE LIMITS

X2 23+32.50

Y 289,943.80

X 1,636,359.66

N0°00'22"E 136.27

N0°02'22"E 136.24

N0°01'58"E 136.23

N0°02'22"E 136.21

NW¼ SW¼ Sec. 33

SW¼ NW¼ Sec. 33

Excess R/W 5,617 S.F.

X2 24+50

X2 24+25

X2 24+00

X2 23+75

X2 23+50

X2 25+40

X2 26

(1-1168)

(1-1169)

(1-1170)

(1-1171)

(1-1172)

(1-1173)

(1-1174)

(1-11769)

FOR RELINQUISHMENT TO CITY Conveyed to Mountlake Terrace by deed 8-26-80

MOUNTLAKE TERRACE DIV. No. 35

MOUNTLAKE TERRACE DIV. No. 15

55TH PL. W.

33RD AVE. W.

X2 20+18.69 = C Line 10+00

R = 93.36'

L = 93.21'

X2 22+50

X2 23+31.56 (40' Lt.)

N0°38'33"E 676.78'

N0°38'33"E 2653.92' to Sec. Cor.

N89°21'27"W 359.46'

N89°32'12"E

EQUATION

LR PT 349+01.34 Bk =

L PCT 348+85.68 Bk =

L' L' & R Pct 348+93.51 Ahd.

Pac. T&T Manhole

Underground Cable

60TH AVE. W.

TURNBACK LINE

FOR RELINQUISHMENT TO CITY Conveyed to Mountlake Terrace by deed 8-26-80

SR 5

L 345+58.88

L PT

SR5

NB Bus Lane

Flyer Stop

Platform & Shelter

Shelter

C LINE

D LINE

B LINE

MOUNTLAKE TERRACE PARK & RIDE LOT

N01°25'00"E 645.16' N0°01'41"E

L 345+45.74

X2 20+47.61

X2 20+00

X2 22

X2 22+50

L 344+00

L 345+00

L 346+00

L 347+00

L 348+00

L 349+00

L 350+00

L 351+00

L 352+00

L 353+00

L 354+00

L 355+00

L 356+00

L 357+00

L 358+00

L 359+00

L 360+00

L 361+00

L 362+00

L 363+00

L

Docusign Envelope ID: F922A37B-A42F-42D6-9A96-09B1A7B7ED2E

WSDOT Notes:

1. Notify WSDOT CTCO 5 days before starting work by contacting 206-440-4338 or emailing Jennifer.Baldeh@wsdot.wa.gov.
2. At time of Work, call WSDOT Radio at (206) 440-4490 when lane/shoulder is closed, and again when lane/shoulder is opened. Leave contact name and mobile phone number with WSDOT Radio
3. Notify Transit Agency(ies) & affected businesses 5 days prior to beginning Work.
4. Pedestrians and bicyclists shall be accommodated through the work zone. Assistance or signed detour shall be provided.
5. Only essential equipment and materials shall be on WSDOT Right of Way (ROW) during working Hours. No equipment or materials shall be on WSDOT ROW during non-working hours.
6. Channelization devices shall be Traffic Safety Drums with 6-inch retroreflective bands, fabricated from type 3 or type 4 or higher sheeting type, as described in Section 9-28.12 of the WSDOT Standard Specifications.
7. During non-Working hours. area shall meet criteria in WSDOT Std Specs. 1-07 23, Including, but not limited to, "drop off" protection.
8. All W-Series signs shall be 48"x48" Black on Orange and retroreflective.
9. All R-Series signs shall be Black on White.
10. Flagging Station shall be visible from W20-7A. Add additional W20-7A if needed due to limited sight distance and retroreflective.
11. Traffic Holds shall not exceed 5 minutes per occurrence. If longer than 5 minutes is needed, traffic shall be allowed to clear prior to the next attempt.
12. When side street or cross street fall within the sign sequence, signs shall also be placed on side streets.
13. CLOSURE DAYS AND TIMES Shall be Deferred to the LOCAL AGENCY

Holiday Impacts:

No closures will be allowed from noon the day prior to a holiday or holiday weekend through noon the day following a holiday or holiday weekend. It is a holiday weekend when the holiday falls on Friday, Saturday, Sunday, or Monday.

Jurisdiction:

Approval limited to traffic control devices located within WSDOT right-of-way. Devices on City or County roads are the responsibility of the City or County.

APPROVAL EXPIRES 6 MONTHS AFTER DATE SIGNED

ACCEPTED AS NOTED
4/6/26
Krissy Kaufman
WSDOT TRAFFIC OPERATIONS
Within WSDOT Right-of-Way/Limited Access Only
LOCAL AGENCY Shall Also Accept

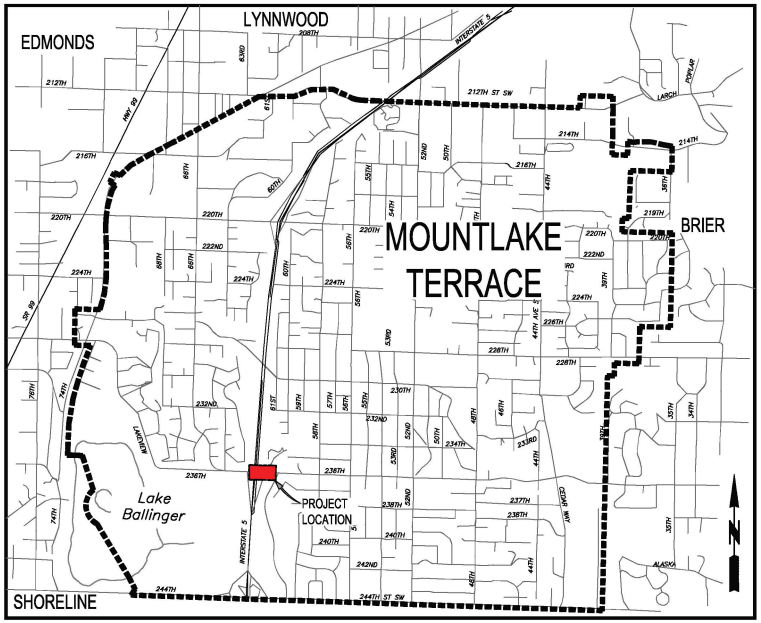

VICINITY MAP & SITE PLAN

CITY OF MOUNTLAKE TERRACE
TRANSIT CONNECTION CORRIDOR PROJECT

PROJECT NO. C2202

PROJECT MANAGER: DONNELLE DAYAO,
PARKS PROJECT MANAGER

236TH STREET SW TRAFFIC CONTROL PLAN FOR
SIDEWALK RECONSTRUCTION ON SOUTH SIDE OF 236TH.

Exhibit C
NWS-2575-MLT
MLT Ped Plaza
Page 1 of 2

CITY OF MOUNTLAKE TERRACE
ENGINEERING SERVICES DEPARTMENT
23204 58TH AVE W
MOUNTLAKE TERRACE, WA 98043
(425) 775-0420
FAX (425) 775-0420

CITY OF MOUNTLAKE TERRACE
TRANSIT CONNECTION CORRIDOR PROJECT
TRAFFIC CONTROL PLAN VICINITY MAP

DRAWING NO: TC01

LEGEND

- EXISTING SIGN
- CLASS A SIGN
- CLASS B SIGN
- TRAFFIC SAFETY DRUM
- WORK ZONE
- TYPE 3 BARRICADE
- SIGNALIZED INTERSECTION
- UNIFORMED POLICE OFFICER (UPO)

APPROVAL EXPIRES 6 MONTHS AFTER DATE SIGNED

ACCEPTED AS NOTED
4/6/26
Krissy Kaufman
WSDOT TRAFFIC OPERATIONS

Within WSDOT Right-of-Way/Limited Access Only
Local Agency Shall Also Accept

SEE PAGE 1 FOR WSDOT NOTES

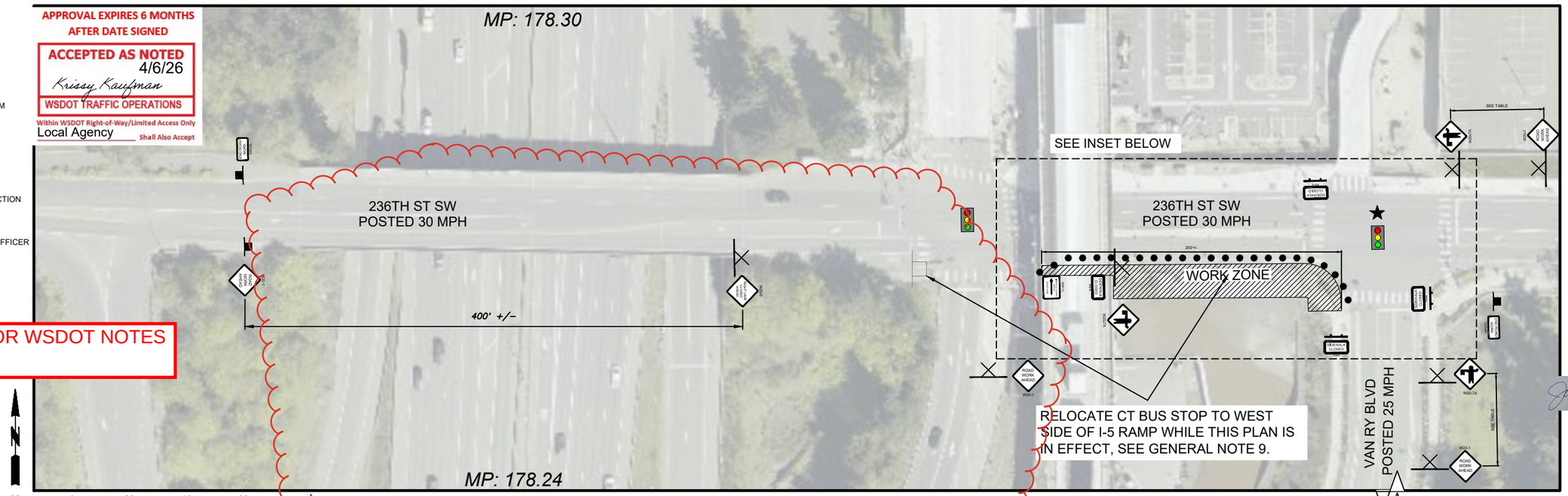

WORK ZONE CHANNELIZATION DEVICES AND SIGNS

GENERAL NOTES:

1. TRAFFIC CONTROL PLAN APPROVED FOR USE 24 HRS/7 DAYS PER WEEK.
2. CONTRACTOR TO FIELD VERIFY AND ADJUST SIGNAGE AS NECESSARY. SIGN AND CHANNELIZATION SPACING, TAPER LENGTHS, BUFFER SPACE, AND ALL OTHER TRAFFIC CONTROL PARAMETERS SHALL FOLLOW THE CURRENT EDITION OF THE MANUAL OF UNIFORM TRAFFIC CONTROL DEVICES (MUTCD). ADDITIONAL SIGNAGE MAY BE REQUIRED AS DIRECTED BY THE ENGINEER.
3. REVISIONS TO TRAFFIC CONTROL PLANS TO BE USED DURING CONSTRUCTION SHALL BE SUBMITTED 10 WORKING DAYS PRIOR TO USE.
4. SEE SPECIAL PROVISIONS FOR NOTIFICATION REQUIREMENTS FOR OTHER AFFECTED AGENCIES.
5. FOR NIGHTTIME WORK ALL TRAFFIC CONTROL DEVICES SHALL FOLLOW MUTCD REQUIREMENTS FOR NIGHTTIME USE.
6. CONTRACTOR SHALL MAINTAIN 11 FT WIDE TRAVEL LANES AT ALL TIMES FOR ALL LANES OPEN TO TRAFFIC.
7. ALL SHALL BE BLACK ON ORANGE UNLESS OTHERWISE SPECIFIED.
8. ALL W- AND R-SERIES SIGN SIZES AS NOTED.
9. CONTACT COMMUNITY TRANSIT FACILITIES PLANNER SHAWN NAKANO, (425) 521.5329 FIVE (5) DAYS PRIOR TO CLOSING OR RELOCATING CT BUS STOPS.

OWNER: CITY OF MOUNTLAKE TERRACE
CONTACT: DONNELLE DAYAO, PROJECT MANAGER
DDAYAO@MLTWA.GOV
425.582.3832

TRAFFIC CONTROL SUPERVISOR (ASSIGNED BY CONTRACTOR AFTER AWARD):

NAME: _____

TEL: _____

EMAIL: _____

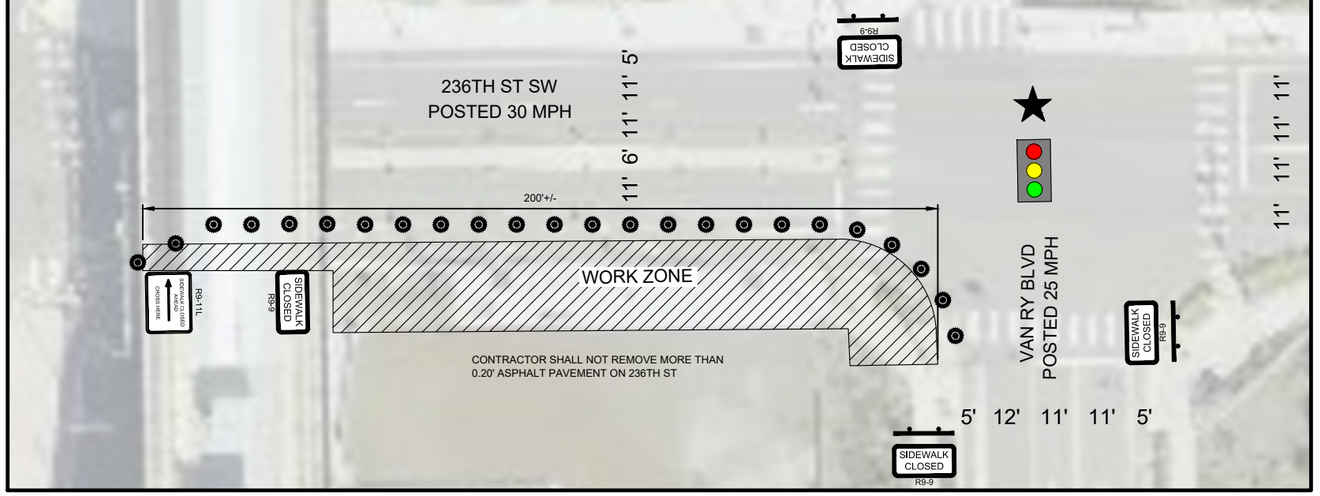

WORK ZONE AND PEDESTRIAN SIGNS

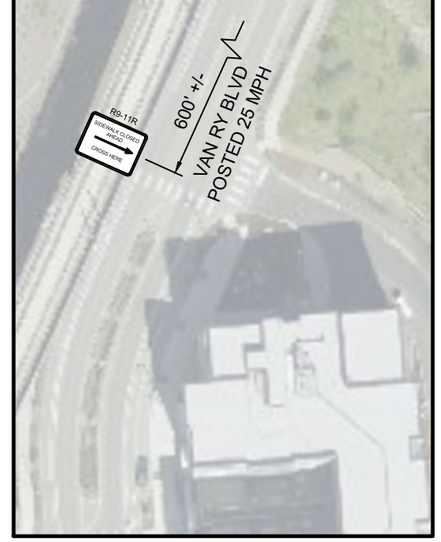

PED DETOUR, VAN RY BLVD SOUTH

MINIMUM TAPER LENGTH (L) IN FT					
LANE WIDTH, FEET	POSTED SPEED (MPH)				
	25	30	35	40	45
10	105	150	205	265	450
11	115	165	225	295	495
12	125	180	245	320	540

CHANNELIZATION DEVICE SPACING (FT)		
MPH	TAPER	TANGENT
50/70	40	80
35/45	30	60
25/30	20	40

SIGN SPACING = X		
RURAL ROADS	45/55 MPH	500 FT +/-
URBAN ARTERIALS	35/40 MPH	350 FT +/-
URBAN STREETS RESIDENTIAL & BUSINESS DISTRICTS	25/30 MPH	200 FT +/-

ROAD WORK AHEAD
W20-1
36" X 36"

W20-7A
36" X 36"

END ROAD WORK
G20-2
24" X 12"

SIDEWALK CLOSED
R9-9
24" X 12"

SIDEWALK CLOSED AHEAD
CROSS HERE
R9-11L
24" X 18"

SIDEWALK CLOSED AHEAD
CROSS HERE
R9-11R
24" X 18"

WSDOT APPROVAL STAMP
2" x 2"

TCP PREPARED BY:
JEFF RIVERS, Jrivers@mltwa.gov
425.758.5970

CITY OF MOUNTLAKE TERRACE
ENGINEERING SERVICES DEPARTMENT
23204 58TH AVE W
MOUNTLAKE TERRACE, WA 98043
(425) 775-1551
FAX (425) 775-0420

STATE OF WASHINGTON
JOHN C. MAREK
43563
REGISTERED PROFESSIONAL ENGINEER

CITY OF MOUNTLAKE TERRACE
TRANSIT CONNECTION CORRIDOR PROJECT
TRAFFIC CONTROL PLAN

APPROVED BY: DATE:
PROJECT ENGINEER: DATE:
- -
DESCRIPTION
- - - -
- - - -
- - - -
- - - -
DRAWN BY: J. RIVERS
CHECKED BY: J. MAREK
REVISION
- - - -
- - - -
- - - -
- - - -
DRAWING NO.: TC02
HORIZONTAL SCALE:
VERTICAL SCALE:
- - - -
- - - -
- - - -
- - - -
K:\ENGINEER\CONSTRUCTION PROJECTS\2022\C2202-TRANSIT CONNECTION CORRIDOR\2 - DESIGN\(MRKS)TCPS\C2202_TCP_GATEWAY.DWG
PLOT DATE: Friday, February 27, 2026 11:58:05 AM

PART II – REQUIRED FEDERAL AID CONTRACT PROVISIONS

REQUIRED CONTRACT PROVISIONS
FEDERAL-AID CONSTRUCTION CONTRACTS

I. General
II. Nondiscrimination
III. Non-segregated Facilities
IV. Davis-Bacon and Related Act Provisions
V. Contract Work Hours and Safety Standards Act Provisions
VI. Subletting or Assigning the Contract
VII. Safety: Accident Prevention
VIII. False Statements Concerning Highway Projects
IX. Implementation of Clean Air Act and Federal Water Pollution Control Act
X. Certification Regarding Debarment, Suspension, Ineligibility and Voluntary Exclusion
XI. Certification Regarding Use of Contract Funds for Lobbying
XII. Use of United States-Flag Vessels:

ATTACHMENTS

A. Employment and Materials Preference for Appalachian Development Highway System or Appalachian Local Access Road Contracts (included in Appalachian contracts only)

I. GENERAL

1. Form FHWA-1273 must be physically incorporated in each construction contract funded under title 23, United States Code, as required in 23 CFR 633.102(b) (excluding emergency contracts solely intended for debris removal). The contractor (or subcontractor) must insert this form in each subcontract and further require its inclusion in all lower tier subcontracts (excluding purchase orders, rental agreements and other agreements for supplies or services). 23 CFR 633.102(e).

The applicable requirements of Form FHWA-1273 are incorporated by reference for work done under any purchase order, rental agreement or agreement for other services. The prime contractor shall be responsible for compliance by any subcontractor, lower-tier subcontractor or service provider. 23 CFR 633.102(e).

Form FHWA-1273 must be included in all Federal-aid design-build contracts, in all subcontracts and in lower tier subcontracts (excluding subcontracts for design services, purchase orders, rental agreements and other agreements for supplies or services) in accordance with 23 CFR 633.102. The design-builder shall be responsible for compliance by any subcontractor, lower-tier subcontractor or service provider.

Contracting agencies may reference Form FHWA-1273 in solicitation-for-bids or request-for-proposals documents, however, the Form FHWA-1273 must be physically incorporated (not referenced) in all contracts, subcontracts and lower-tier subcontracts (excluding purchase orders, rental agreements and other agreements for supplies or services related to a construction contract). 23 CFR 633.102(b).

2. Subject to the applicability criteria noted in the following sections, these contract provisions shall apply to all work performed on the contract by the contractor's own organization and with the assistance of workers under the contractor's immediate superintendence and to all work performed on the contract by piecework, station work, or by subcontract. 23 CFR 633.102(d).

3. A breach of any of the stipulations contained in these Required Contract Provisions may be sufficient grounds for withholding of progress payments, withholding of final payment, termination of the contract, suspension / debarment or any other action determined to be appropriate by the contracting agency and FHWA.

4. Selection of Labor: During the performance of this contract, the contractor shall not use convict labor for any purpose within the limits of a construction project on a Federal-aid highway unless it is labor performed by convicts who are on parole, supervised release, or probation. 23 U.S.C. 114(b). The term Federal-aid highway does not include roadways functionally classified as local roads or rural minor collectors. 23 U.S.C. 101(a).

II. NONDISCRIMINATION (23 CFR 230.107(a); 23 CFR Part 230, Subpart A, Appendix A; EO 11246)

The provisions of this section related to 23 CFR Part 230, Subpart A, Appendix A are applicable to all Federal-aid construction contracts and to all related construction subcontracts of $10,000 or more. The provisions of 23 CFR Part 230 are not applicable to material supply, engineering, or architectural service contracts.

In addition, the contractor and all subcontractors must comply with the following policies: Executive Order 11246, 41 CFR Part 60, 29 CFR Parts 1625-1627, 23 U.S.C. 140, Section 504 of the Rehabilitation Act of 1973, as amended (29 U.S.C. 794), Title VI of the Civil Rights Act of 1964, as amended (42 U.S.C. 2000d et seq.), and related regulations including 49 CFR Parts 21, 26, and 27; and 23 CFR Parts 200, 230, and 633.

The contractor and all subcontractors must comply with: the requirements of the Equal Opportunity Clause in 41 CFR 60-1.4(b) and, for all construction contracts exceeding $10,000, the Standard Federal Equal Employment Opportunity Construction Contract Specifications in 41 CFR 60-4.3.

Note: The U.S. Department of Labor has exclusive authority to determine compliance with Executive Order 11246 and the policies of the Secretary of Labor including 41 CFR Part 60, and 29 CFR Parts 1625-1627. The contracting agency and the FHWA have the authority and the responsibility to ensure compliance with 23 U.S.C. 140, Section 504 of the Rehabilitation Act of 1973, as amended (29 U.S.C. 794), and Title VI of the Civil Rights Act of 1964, as amended (42 U.S.C. 2000d et seq.), and related regulations including 49 CFR Parts 21, 26, and 27; and 23 CFR Parts 200, 230, and 633.

The following provision is adopted from 23 CFR Part 230, Subpart A, Appendix A, with appropriate revisions to conform to the U.S. Department of Labor (US DOL) and FHWA requirements.

1. Equal Employment Opportunity: Equal Employment Opportunity (EEO) requirements not to discriminate and to take affirmative action to assure equal opportunity as set forth under laws, executive orders, rules, regulations (*see* 28 CFR Part 35, 29 CFR Part 1630, 29 CFR Parts 1625-1627, 41 CFR Part 60 and 49 CFR Part 27) and orders of the Secretary of Labor as modified by the provisions prescribed herein, and imposed pursuant to 23 U.S.C. 140, shall constitute the EEO and specific affirmative action standards for the contractor's project activities under this contract. The provisions of the Americans with Disabilities Act of 1990 (42 U.S.C. 12101 et seq.) set forth under 28 CFR Part 35 and 29 CFR Part 1630 are incorporated by reference in this contract. In the execution of this contract, the contractor agrees to comply with the following minimum specific requirement activities of EEO:

a. The contractor will work with the contracting agency and the Federal Government to ensure that it has made every good faith effort to provide equal opportunity with respect to all of its terms and conditions of employment and in their review of activities under the contract. 23 CFR 230.409 (g)(4) & (5).

b. The contractor will accept as its operating policy the following statement:

"It is the policy of this Company to assure that applicants are employed, and that employees are treated during employment, without regard to their race, religion, sex, sexual orientation, gender identity, color, national origin, age or disability. Such action shall include: employment, upgrading, demotion, or transfer; recruitment or recruitment advertising; layoff or termination; rates of pay or other forms of compensation; and selection for training, including apprenticeship, pre-apprenticeship, and/or on-the-job training."

2. EEO Officer: The contractor will designate and make known to the contracting officers an EEO Officer who will have the responsibility for and must be capable of effectively administering and promoting an active EEO program and who must be assigned adequate authority and responsibility to do so.

3. Dissemination of Policy: All members of the contractor's staff who are authorized to hire, supervise, promote, and discharge employees, or who recommend such action or are substantially involved in such action, will be made fully cognizant of and will implement the contractor's EEO policy and contractual responsibilities to provide EEO in each grade and classification of employment. To ensure that the above agreement will be met, the following actions will be taken as a minimum:

a. Periodic meetings of supervisory and personnel office employees will be conducted before the start of work and then not less often than once every six months, at which time the contractor's EEO policy and its implementation will be reviewed and explained. The meetings will be conducted by the EEO Officer or other knowledgeable company official.

b. All new supervisory or personnel office employees will be given a thorough indoctrination by the EEO Officer, covering all major aspects of the contractor's EEO obligations within thirty days following their reporting for duty with the contractor.

c. All personnel who are engaged in direct recruitment for the project will be instructed by the EEO Officer in the contractor's procedures for locating and hiring minorities and women.

d. Notices and posters setting forth the contractor's EEO policy will be placed in areas readily accessible to employees, applicants for employment and potential employees.

e. The contractor's EEO policy and the procedures to implement such policy will be brought to the attention of employees by means of meetings, employee handbooks, or other appropriate means.

4. Recruitment: When advertising for employees, the contractor will include in all advertisements for employees the notation: "An Equal Opportunity Employer." All such advertisements will be placed in publications having a large circulation among minorities and women in the area from which the project work force would normally be derived.

a. The contractor will, unless precluded by a valid bargaining agreement, conduct systematic and direct recruitment through public and private employee referral sources likely to yield qualified minorities and women. To meet this requirement, the contractor will identify sources of potential minority group employees and establish with such identified sources procedures whereby minority and women applicants may be referred to the contractor for employment consideration.

b. In the event the contractor has a valid bargaining agreement providing for exclusive hiring hall referrals, the contractor is expected to observe the provisions of that agreement to the extent that the system meets the contractor's compliance with EEO contract provisions. Where implementation of such an agreement has the effect of discriminating against minorities or women, or obligates the contractor to do the same, such implementation violates Federal nondiscrimination provisions.

c. The contractor will encourage its present employees to refer minorities and women as applicants for employment. Information and procedures with regard to referring such applicants will be discussed with employees.

5. Personnel Actions: Wages, working conditions, and employee benefits shall be established and administered, and personnel actions of every type, including hiring, upgrading, promotion, transfer, demotion, layoff, and termination, shall be taken without regard to race, color, religion, sex, sexual orientation, gender identity, national origin, age or disability. The following procedures shall be followed:

a. The contractor will conduct periodic inspections of project sites to ensure that working conditions and employee facilities do not indicate discriminatory treatment of project site personnel.

b. The contractor will periodically evaluate the spread of wages paid within each classification to determine any evidence of discriminatory wage practices.

c. The contractor will periodically review selected personnel actions in depth to determine whether there is evidence of discrimination. Where evidence is found, the contractor will promptly take corrective action. If the review indicates that the discrimination may extend beyond the actions reviewed, such corrective action shall include all affected persons.

d. The contractor will promptly investigate all complaints of alleged discrimination made to the contractor in connection with its obligations under this contract, will attempt to resolve such complaints, and will take appropriate corrective action

within a reasonable time. If the investigation indicates that the discrimination may affect persons other than the complainant, such corrective action shall include such other persons. Upon completion of each investigation, the contractor will inform every complainant of all of their avenues of appeal.

6. Training and Promotion:

a. The contractor will assist in locating, qualifying, and increasing the skills of minorities and women who are applicants for employment or current employees. Such efforts should be aimed at developing full journey level status employees in the type of trade or job classification involved.

b. Consistent with the contractor's work force requirements and as permissible under Federal and State regulations, the contractor shall make full use of training programs (i.e., apprenticeship and on-the-job training programs for the geographical area of contract performance). In the event a special provision for training is provided under this contract, this subparagraph will be superseded as indicated in the special provision. The contracting agency may reserve training positions for persons who receive welfare assistance in accordance with 23 U.S.C. 140(a).

c. The contractor will advise employees and applicants for employment of available training programs and entrance requirements for each.

d. The contractor will periodically review the training and promotion potential of employees who are minorities and women and will encourage eligible employees to apply for such training and promotion.

7. Unions: If the contractor relies in whole or in part upon unions as a source of employees, the contractor will use good faith efforts to obtain the cooperation of such unions to increase opportunities for minorities and women. 23 CFR 230.409. Actions by the contractor, either directly or through a contractor's association acting as agent, will include the procedures set forth below:

a. The contractor will use good faith efforts to develop, in cooperation with the unions, joint training programs aimed toward qualifying more minorities and women for membership in the unions and increasing the skills of minorities and women so that they may qualify for higher paying employment.

b. The contractor will use good faith efforts to incorporate an EEO clause into each union agreement to the end that such union will be contractually bound to refer applicants without regard to their race, color, religion, sex, sexual orientation, gender identity, national origin, age, or disability.

c. The contractor is to obtain information as to the referral practices and policies of the labor union except that to the extent such information is within the exclusive possession of the labor union and such labor union refuses to furnish such information to the contractor, the contractor shall so certify to the contracting agency and shall set forth what efforts have been made to obtain such information.

d. In the event the union is unable to provide the contractor with a reasonable flow of referrals within the time limit set forth in the collective bargaining agreement, the contractor will, through independent recruitment efforts, fill the employment vacancies without regard to race, color, religion, sex, sexual orientation, gender identity, national origin, age, or disability; making full efforts to obtain qualified and/or qualifiable minorities and women. The failure of a union to provide sufficient referrals (even though it is obligated to provide exclusive referrals under the terms of a collective bargaining agreement) does not relieve the contractor from the requirements of this paragraph. In the event the union referral practice prevents the contractor from meeting the obligations pursuant to Executive Order 11246, as amended, and these special provisions, such contractor shall immediately notify the contracting agency.

8. Reasonable Accommodation for Applicants / Employees with Disabilities: The contractor must be familiar with the requirements for and comply with the Americans with Disabilities Act and all rules and regulations established thereunder. Employers must provide reasonable accommodation in all employment activities unless to do so would cause an undue hardship.

9. Selection of Subcontractors, Procurement of Materials and Leasing of Equipment: The contractor shall not discriminate on the grounds of race, color, religion, sex, sexual orientation, gender identity, national origin, age, or disability in the selection and retention of subcontractors, including procurement of materials and leases of equipment. The contractor shall take all necessary and reasonable steps to ensure nondiscrimination in the administration of this contract.

a. The contractor shall notify all potential subcontractors, suppliers, and lessors of their EEO obligations under this contract.

b. The contractor will use good faith efforts to ensure subcontractor compliance with their EEO obligations.

10. Assurances Required:

a. The requirements of 49 CFR Part 26 and the State DOT's FHWA-approved Disadvantaged Business Enterprise (DBE) program are incorporated by reference.

b. The contractor, subrecipient or subcontractor shall not discriminate on the basis of race, color, national origin, or sex in the performance of this contract. The contractor shall carry out applicable requirements of 49 CFR part 26 in the award and administration of DOT-assisted contracts. Failure by the contractor to carry out these requirements is a material breach of this contract, which may result in the termination of this contract or such other remedy as the recipient deems appropriate, which may include, but is not limited to:
(1) Withholding monthly progress payments;
(2) Assessing sanctions;
(3) Liquidated damages; and/or
(4) Disqualifying the contractor from future bidding as non-responsible.

c. The Title VI and nondiscrimination provisions of U.S. DOT Order 1050.2A at Appendixes A and E are incorporated by reference. 49 CFR Part 21.

11. Records and Reports: The contractor shall keep such records as necessary to document compliance with the EEO requirements. Such records shall be retained for a period of three years following the date of the final payment to the contractor for all contract work and shall be available at reasonable times and places for inspection by authorized representatives of the contracting agency and the FHWA.

a. The records kept by the contractor shall document the following:

(1) The number and work hours of minority and non-minority group members and women employed in each work classification on the project;

(2) The progress and efforts being made in cooperation with unions, when applicable, to increase employment opportunities for minorities and women; and

(3) The progress and efforts being made in locating, hiring, training, qualifying, and upgrading minorities and women.

b. The contractors and subcontractors will submit an annual report to the contracting agency each July for the duration of the project indicating the number of minority, women, and non-minority group employees currently engaged in each work classification required by the contract work. This information is to be reported on Form FHWA-1391. The staffing data should represent the project work force on board in all or any part of the last payroll period preceding the end of July. If on-the-job training is being required by special provision, the contractor will be required to collect and report training data. The employment data should reflect the work force on board during all or any part of the last payroll period preceding the end of July.

III. NONSEGREGATED FACILITIES

This provision is applicable to all Federal-aid construction contracts and to all related construction subcontracts of more than $10,000. 41 CFR 60-1.5.

As prescribed by 41 CFR 60-1.8, the contractor must ensure that facilities provided for employees are provided in such a manner that segregation on the basis of race, color, religion, sex, sexual orientation, gender identity, or national origin cannot result. The contractor may neither require such segregated use by written or oral policies nor tolerate such use by employee custom. The contractor's obligation extends further to ensure that its employees are not assigned to perform their services at any location under the contractor's control where the facilities are segregated. The term "facilities" includes waiting rooms, work areas, restaurants and other eating areas, time clocks, restrooms, washrooms, locker rooms and other storage or dressing areas, parking lots, drinking fountains, recreation or entertainment areas, transportation, and housing provided for employees. The contractor shall provide separate or single-user restrooms and necessary dressing or sleeping areas to assure privacy between sexes.

IV. DAVIS-BACON AND RELATED ACT PROVISIONS

This section is applicable to all Federal-aid construction projects exceeding $2,000 and to all related subcontracts and lower-tier subcontracts (regardless of subcontract size), in accordance with 29 CFR 5.5. The requirements apply to all projects located within the right-of-way of a roadway that is functionally classified as Federal-aid highway. 23 U.S.C. 113. This excludes roadways functionally classified as local roads or rural minor collectors, which are exempt. 23 U.S.C. 101. Where applicable law requires that projects be treated as a project on a Federal-aid highway, the provisions of this subpart will apply regardless of the location of the project. Examples include: Surface Transportation Block Grant Program projects funded under 23 U.S.C. 133 [excluding recreational trails projects], the Nationally Significant Freight and Highway Projects funded under 23 U.S.C. 117, and National Highway Freight Program projects funded under 23 U.S.C. 167.

The following provisions are from the U.S. Department of Labor regulations in 29 CFR 5.5 “Contract provisions and related matters” with minor revisions to conform to the FHWA-1273 format and FHWA program requirements.

1. Minimum wages (29 CFR 5.5)

a. *Wage rates and fringe benefits.* All laborers and mechanics employed or working upon the site of the work (or otherwise working in construction or development of the project under a development statute), will be paid unconditionally and not less often than once a week, and without subsequent deduction or rebate on any account (except such payroll deductions as are permitted by regulations issued by the Secretary of Labor under the Copeland Act (29 CFR part 3)), the full amount of basic hourly wages and bona fide fringe benefits (or cash equivalents thereof) due at time of payment computed at rates not less than those contained in the wage determination of the Secretary of Labor which is attached hereto and made a part hereof, regardless of any contractual relationship which may be alleged to exist between the contractor and such laborers and mechanics. As provided in paragraphs (d) and (e) of 29 CFR 5.5, the appropriate wage determinations are effective by operation of law even if they have not been attached to the contract. Contributions made or costs reasonably anticipated for bona fide fringe benefits under the Davis-Bacon Act (40 U.S.C. 3141(2)(B)) on behalf of laborers or mechanics are considered wages paid to such laborers or mechanics, subject to the provisions of paragraph 1.e. of this section; also, regular contributions made or costs incurred for more than a weekly period (but not less often than quarterly) under plans, funds, or programs which cover the particular weekly period, are deemed to be constructively made or incurred during such weekly period. Such laborers and mechanics must be paid the appropriate wage rate and fringe benefits on the wage determination for the classification(s) of work actually performed, without regard to skill, except as provided in paragraph 4. of this section. Laborers or mechanics performing work in more than one classification may be compensated at the rate specified for each classification for the time actually worked therein: *Provided,* That the employer's payroll records accurately set forth the time spent in each classification in which work is performed. The wage determination (including any additional classifications and wage rates conformed under paragraph 1.c. of this section) and the Davis-Bacon poster (WH–1321) must be posted at all times by the contractor and its subcontractors at the site of the work in a prominent and accessible place where it can be easily seen by the workers.

b. *Frequently recurring classifications.* (1) In addition to wage and fringe benefit rates that have been determined to be prevailing under the procedures set forth in 29 CFR part 1, a wage determination may contain, pursuant to § 1.3(f), wage and fringe benefit rates for classifications of laborers and mechanics for which conformance requests are regularly submitted pursuant to paragraph 1.c. of this section, provided that:

(i) The work performed by the classification is not performed by a classification in the wage determination for which a prevailing wage rate has been determined;

(ii) The classification is used in the area by the construction industry; and

(iii) The wage rate for the classification bears a reasonable relationship to the prevailing wage rates contained in the wage determination.

(2) The Administrator will establish wage rates for such classifications in accordance with paragraph 1.c.(1)(iii) of this section. Work performed in such a classification must be paid at no less than the wage and fringe benefit rate listed on the wage determination for such classification.

c. *Conformance.* (1) The contracting officer must require that any class of laborers or mechanics, including helpers, which is not listed in the wage determination and which is to be employed under the contract be classified in conformance with the wage determination. Conformance of an additional classification and wage rate and fringe benefits is appropriate only when the following criteria have been met:

(i) The work to be performed by the classification requested is not performed by a classification in the wage determination; and

(ii) The classification is used in the area by the construction industry; and

(iii) The proposed wage rate, including any bona fide fringe benefits, bears a reasonable relationship to the wage rates contained in the wage determination.

(2) The conformance process may not be used to split, subdivide, or otherwise avoid application of classifications listed in the wage determination.

(3) If the contractor and the laborers and mechanics to be employed in the classification (if known), or their representatives, and the contracting officer agree on the classification and wage rate (including the amount designated for fringe benefits where appropriate), a report of the action taken will be sent by the contracting officer by email to *DBAconformance@dol.gov*. The Administrator, or an authorized representative, will approve, modify, or disapprove every additional classification action within 30 days of receipt and so advise the contracting officer or will notify the contracting officer within the 30–day period that additional time is necessary.

(4) In the event the contractor, the laborers or mechanics to be employed in the classification or their representatives, and the contracting officer do not agree on the proposed classification and wage rate (including the amount designated for fringe benefits, where appropriate), the contracting officer will, by email to *DBAconformance@dol.gov*, refer the questions, including the views of all interested parties and the recommendation of the contracting officer, to the Administrator for determination. The Administrator, or an authorized representative, will issue a determination within 30 days of receipt and so advise the contracting officer or will notify the contracting officer within the 30–day period that additional time is necessary.

(5) The contracting officer must promptly notify the contractor of the action taken by the Wage and Hour Division under paragraphs 1.c.(3) and (4) of this section. The contractor must furnish a written copy of such determination to each affected worker or it must be posted as a part of the wage determination. The wage rate (including fringe benefits where appropriate) determined pursuant to paragraph 1.c.(3) or (4) of this section must be paid to all workers performing work in the classification under this contract from the first day on which work is performed in the classification.

d. *Fringe benefits not expressed as an hourly rate.* Whenever the minimum wage rate prescribed in the contract for a class of laborers or mechanics includes a fringe benefit which is not expressed as an hourly rate, the contractor may either pay the benefit as stated in the wage determination or may pay another bona fide fringe benefit or an hourly cash equivalent thereof.

e. *Unfunded plans.* If the contractor does not make payments to a trustee or other third person, the contractor may consider as part of the wages of any laborer or mechanic the amount of any costs reasonably anticipated in providing bona fide fringe benefits under a plan or program, *Provided,* That the Secretary of Labor has found, upon the written request of the contractor, in accordance with the criteria set forth in § 5.28, that the applicable standards of the Davis-Bacon Act have been met. The Secretary of Labor may require the contractor to set aside in a separate account assets for the meeting of obligations under the plan or program.

f. *Interest.* In the event of a failure to pay all or part of the wages required by the contract, the contractor will be required to pay interest on any underpayment of wages.

2. Withholding (29 CFR 5.5)

a. *Withholding requirements.* The contracting agency may, upon its own action, or must, upon written request of an authorized representative of the Department of Labor, withhold or cause to be withheld from the contractor so much of the accrued payments or advances as may be considered necessary to satisfy the liabilities of the prime contractor or any subcontractor for the full amount of wages and monetary relief, including interest, required by the clauses set forth in this section for violations of this contract, or to satisfy any such liabilities required by any other Federal contract, or federally assisted contract subject to Davis-Bacon labor standards, that is held by the same prime contractor (as defined in § 5.2). The necessary funds may be withheld from the contractor under this contract, any other Federal contract with the same prime contractor, or any other federally assisted contract that is subject to Davis-Bacon labor standards requirements and is held by the same prime contractor, regardless of whether the other contract was awarded or assisted by the same agency, and such funds may be used to satisfy the contractor liability for which the funds were withheld. In the event of a contractor's failure to pay any laborer or mechanic, including any apprentice or helper working on the site of the work all or part of the wages required by the contract, or upon the contractor's failure to submit the required records as discussed in paragraph 3.d. of this section, the contracting agency may on its own initiative and after written notice to the contractor, take such action as may be necessary to cause the suspension of any further payment, advance, or guarantee of funds until such violations have ceased.

b. *Priority to withheld funds.* The Department has priority to funds withheld or to be withheld in accordance with paragraph

2.a. of this section or Section V, paragraph 3.a., or both, over claims to those funds by:

(1) A contractor's surety(ies), including without limitation performance bond sureties and payment bond sureties;

(2) A contracting agency for its reprocurement costs;

(3) A trustee(s) (either a court-appointed trustee or a U.S. trustee, or both) in bankruptcy of a contractor, or a contractor's bankruptcy estate;

(4) A contractor's assignee(s);

(5) A contractor's successor(s); or

(6) A claim asserted under the Prompt Payment Act, 31 U.S.C. 3901–3907.

3. Records and certified payrolls (29 CFR 5.5)

a. *Basic record requirements* (1) *Length of record retention.* All regular payrolls and other basic records must be maintained by the contractor and any subcontractor during the course of the work and preserved for all laborers and mechanics working at the site of the work (or otherwise working in construction or development of the project under a development statute) for a period of at least 3 years after all the work on the prime contract is completed.

(2) *Information required.* Such records must contain the name; Social Security number; last known address, telephone number, and email address of each such worker; each worker's correct classification(s) of work actually performed; hourly rates of wages paid (including rates of contributions or costs anticipated for bona fide fringe benefits or cash equivalents thereof of the types described in 40 U.S.C. 3141(2)(B) of the Davis-Bacon Act); daily and weekly number of hours actually worked in total and on each covered contract; deductions made; and actual wages paid.

(3) *Additional records relating to fringe benefits.* Whenever the Secretary of Labor has found under paragraph 1.e. of this section that the wages of any laborer or mechanic include the amount of any costs reasonably anticipated in providing benefits under a plan or program described in 40 U.S.C. 3141(2)(B) of the Davis-Bacon Act, the contractor must maintain records which show that the commitment to provide such benefits is enforceable, that the plan or program is financially responsible, and that the plan or program has been communicated in writing to the laborers or mechanics affected, and records which show the costs anticipated or the actual cost incurred in providing such benefits.

(4) *Additional records relating to apprenticeship.* Contractors with apprentices working under approved programs must maintain written evidence of the registration of apprenticeship programs, the registration of the apprentices, and the ratios and wage rates prescribed in the applicable programs.

b. *Certified payroll requirements* (1) *Frequency and method of submission.* The contractor or subcontractor must submit weekly, for each week in which any DBA- or Related Acts-covered work is performed, certified payrolls to the contracting agency. The prime contractor is responsible for the submission of all certified payrolls by all subcontractors. A contracting agency or prime contractor may permit or require contractors to submit certified payrolls through an electronic system, as long as the electronic system requires a legally valid electronic signature; the system allows the contractor, the contracting agency, and the Department of Labor to access the certified payrolls upon request for at least 3 years after the work on the prime contract has been completed; and the contracting agency or prime contractor permits other methods of submission in situations where the contractor is unable or limited in its ability to use or access the electronic system.

(2) *Information required.* The certified payrolls submitted must set out accurately and completely all of the information required to be maintained under paragraph 3.a.(2) of this section, except that full Social Security numbers and last known addresses, telephone numbers, and email addresses must not be included on weekly transmittals. Instead, the certified payrolls need only include an individually identifying number for each worker (*e.g.,* the last four digits of the worker's Social Security number). The required weekly certified payroll information may be submitted using Optional Form WH–347 or in any other format desired. Optional Form WH–347 is available for this purpose from the Wage and Hour Division website at *https://www.dol.gov/sites/dolgov/files/WHD/legacy/files/wh347/.pdf* or its successor website. It is not a violation of this section for a prime contractor to require a subcontractor to provide full Social Security numbers and last known addresses, telephone numbers, and email addresses to the prime contractor for its own records, without weekly submission by the subcontractor to the contracting agency.

(3) *Statement of Compliance.* Each certified payroll submitted must be accompanied by a "Statement of Compliance," signed by the contractor or subcontractor, or the contractor's or subcontractor's agent who pays or supervises the payment of the persons working on the contract, and must certify the following:

(i) That the certified payroll for the payroll period contains the information required to be provided under paragraph 3.b. of this section, the appropriate information and basic records are being maintained under paragraph 3.a. of this section, and such information and records are correct and complete;

(ii) That each laborer or mechanic (including each helper and apprentice) working on the contract during the payroll period has been paid the full weekly wages earned, without rebate, either directly or indirectly, and that no deductions have been made either directly or indirectly from the full wages earned, other than permissible deductions as set forth in 29 CFR part 3; and

(iii) That each laborer or mechanic has been paid not less than the applicable wage rates and fringe benefits or cash equivalents for the classification(s) of work actually performed, as specified in the applicable wage determination incorporated into the contract.

(4) *Use of Optional Form WH–347.* The weekly submission of a properly executed certification set forth on the reverse side of Optional Form WH–347 will satisfy the requirement for submission of the "Statement of Compliance" required by paragraph 3.b.(3) of this section.

(5) *Signature.* The signature by the contractor, subcontractor, or the contractor's or subcontractor's agent must be an original handwritten signature or a legally valid electronic signature.

(6) *Falsification.* The falsification of any of the above certifications may subject the contractor or subcontractor to civil or criminal prosecution under 18 U.S.C. 1001 and 31 U.S.C. 3729.

(7) *Length of certified payroll retention.* The contractor or subcontractor must preserve all certified payrolls during the course of the work and for a period of 3 years after all the work on the prime contract is completed.

c. *Contracts, subcontracts, and related documents.* The contractor or subcontractor must maintain this contract or subcontract and related documents including, without limitation, bids, proposals, amendments, modifications, and extensions. The contractor or subcontractor must preserve these contracts, subcontracts, and related documents during the course of the work and for a period of 3 years after all the work on the prime contract is completed.

d. *Required disclosures and access* (1) *Required record disclosures and access to workers.* The contractor or subcontractor must make the records required under paragraphs 3.a. through 3.c. of this section, and any other documents that the contracting agency, the State DOT, the FHWA, or the Department of Labor deems necessary to determine compliance with the labor standards provisions of any of the applicable statutes referenced by § 5.1, available for inspection, copying, or transcription by authorized representatives of the contracting agency, the State DOT, the FHWA, or the Department of Labor, and must permit such representatives to interview workers during working hours on the job.

(2) *Sanctions for non-compliance with records and worker access requirements.* If the contractor or subcontractor fails to submit the required records or to make them available, or refuses to permit worker interviews during working hours on the job, the Federal agency may, after written notice to the contractor, sponsor, applicant, owner, or other entity, as the case may be, that maintains such records or that employs such workers, take such action as may be necessary to cause the suspension of any further payment, advance, or guarantee of funds. Furthermore, failure to submit the required records upon request or to make such records available, or to permit worker interviews during working hours on the job, may be grounds for debarment action pursuant to § 5.12. In addition, any contractor or other person that fails to submit the required records or make those records available to WHD within the time WHD requests that the records be produced will be precluded from introducing as evidence in an administrative proceeding under 29 CFR part 6 any of the required records that were not provided or made available to WHD. WHD will take into consideration a reasonable request from the contractor or person for an extension of the time for submission of records. WHD will determine the reasonableness of the request and may consider, among other things, the location of the records and the volume of production.

(3) *Required information disclosures.* Contractors and subcontractors must maintain the full Social Security number and last known address, telephone number, and email address of each covered worker, and must provide them upon request to the contracting agency, the State DOT, the FHWA, the contractor, or the Wage and Hour Division of the Department of Labor for purposes of an investigation or other compliance action.

4. Apprentices and equal employment opportunity (29 CFR 5.5)

a. *Apprentices* (1) *Rate of pay.* Apprentices will be permitted to work at less than the predetermined rate for the work they perform when they are employed pursuant to and individually registered in a bona fide apprenticeship program registered with the U.S. Department of Labor, Employment and Training Administration, Office of Apprenticeship (OA), or with a State Apprenticeship Agency recognized by the OA. A person who is not individually registered in the program, but who has been certified by the OA or a State Apprenticeship Agency (where appropriate) to be eligible for probationary employment as an apprentice, will be permitted to work at less than the predetermined rate for the work they perform in the first 90 days of probationary employment as an apprentice in such a program. In the event the OA or a State Apprenticeship Agency recognized by the OA withdraws approval of an apprenticeship program, the contractor will no longer be permitted to use apprentices at less than the applicable predetermined rate for the work performed until an acceptable program is approved.

(2) *Fringe benefits.* Apprentices must be paid fringe benefits in accordance with the provisions of the apprenticeship program. If the apprenticeship program does not specify fringe benefits, apprentices must be paid the full amount of fringe benefits listed on the wage determination for the applicable classification. If the Administrator determines that a different practice prevails for the applicable apprentice classification, fringe benefits must be paid in accordance with that determination.

(3) *Apprenticeship ratio.* The allowable ratio of apprentices to journeyworkers on the job site in any craft classification must not be greater than the ratio permitted to the contractor as to the entire work force under the registered program or the ratio applicable to the locality of the project pursuant to paragraph 4.a.(4) of this section. Any worker listed on a payroll at an apprentice wage rate, who is not registered or otherwise employed as stated in paragraph 4.a.(1) of this section, must be paid not less than the applicable wage rate on the wage determination for the classification of work actually performed. In addition, any apprentice performing work on the job site in excess of the ratio permitted under this section must be paid not less than the applicable wage rate on the wage determination for the work actually performed.

(4) *Reciprocity of ratios and wage rates.* Where a contractor is performing construction on a project in a locality other than the locality in which its program is registered, the ratios and wage rates (expressed in percentages of the journeyworker's hourly rate) applicable within the locality in which the construction is being performed must be observed. If there is no applicable ratio or wage rate for the locality of the project, the ratio and wage rate specified in the contractor's registered program must be observed.

b. *Equal employment opportunity.* The use of apprentices and journeyworkers under this part must be in conformity with

the equal employment opportunity requirements of Executive Order 11246, as amended, and 29 CFR part 30.

c. Apprentices and Trainees (programs of the U.S. DOT).

Apprentices and trainees working under apprenticeship and skill training programs which have been certified by the Secretary of Transportation as promoting EEO in connection with Federal-aid highway construction programs are not subject to the requirements of paragraph 4 of this Section IV. 23 CFR 230.111(e)(2). The straight time hourly wage rates for apprentices and trainees under such programs will be established by the particular programs. The ratio of apprentices and trainees to journeyworkers shall not be greater than permitted by the terms of the particular program.

5. Compliance with Copeland Act requirements. The contractor shall comply with the requirements of 29 CFR part 3, which are incorporated by reference in this contract as provided in 29 CFR 5.5.

6. Subcontracts. The contractor or subcontractor must insert FHWA-1273 in any subcontracts, along with the applicable wage determination(s) and such other clauses or contract modifications as the contracting agency may by appropriate instructions require, and a clause requiring the subcontractors to include these clauses and wage determination(s) in any lower tier subcontracts. The prime contractor is responsible for the compliance by any subcontractor or lower tier subcontractor with all the contract clauses in this section. In the event of any violations of these clauses, the prime contractor and any subcontractor(s) responsible will be liable for any unpaid wages and monetary relief, including interest from the date of the underpayment or loss, due to any workers of lower-tier subcontractors, and may be subject to debarment, as appropriate. 29 CFR 5.5.

7. Contract termination: debarment. A breach of the contract clauses in 29 CFR 5.5 may be grounds for termination of the contract, and for debarment as a contractor and a subcontractor as provided in 29 CFR 5.12.

8. Compliance with Davis-Bacon and Related Act requirements. All rulings and interpretations of the Davis-Bacon and Related Acts contained in 29 CFR parts 1, 3, and 5 are herein incorporated by reference in this contract as provided in 29 CFR 5.5.

9. Disputes concerning labor standards. As provided in 29 CFR 5.5, disputes arising out of the labor standards provisions of this contract shall not be subject to the general disputes clause of this contract. Such disputes shall be resolved in accordance with the procedures of the Department of Labor set forth in 29 CFR parts 5, 6, and 7. Disputes within the meaning of this clause include disputes between the contractor (or any of its subcontractors) and the contracting agency, the U.S. Department of Labor, or the employees or their representatives.

10. Certification of eligibility. a. By entering into this contract, the contractor certifies that neither it nor any person or firm who has an interest in the contractor's firm is a person or firm ineligible to be awarded Government contracts by virtue of 40 U.S.C. 3144(b) or § 5.12(a).

b. No part of this contract shall be subcontracted to any person or firm ineligible for award of a Government contract by virtue of 40 U.S.C. 3144(b) or § 5.12(a).

c. The penalty for making false statements is prescribed in the U.S. Code, Title 18 Crimes and Criminal Procedure, 18 U.S.C. 1001.

11. Anti-retaliation. It is unlawful for any person to discharge, demote, intimidate, threaten, restrain, coerce, blacklist, harass, or in any other manner discriminate against, or to cause any person to discharge, demote, intimidate, threaten, restrain, coerce, blacklist, harass, or in any other manner discriminate against, any worker or job applicant for:

a. Notifying any contractor of any conduct which the worker reasonably believes constitutes a violation of the DBA, Related Acts, this part, or 29 CFR part 1 or 3;

b. Filing any complaint, initiating or causing to be initiated any proceeding, or otherwise asserting or seeking to assert on behalf of themselves or others any right or protection under the DBA, Related Acts, this part, or 29 CFR part 1 or 3;

c. Cooperating in any investigation or other compliance action, or testifying in any proceeding under the DBA, Related Acts, this part, or 29 CFR part 1 or 3; or

d. Informing any other person about their rights under the DBA, Related Acts, this part, or 29 CFR part 1 or 3.

V. CONTRACT WORK HOURS AND SAFETY STANDARDS ACT

Pursuant to 29 CFR 5.5(b), the following clauses apply to any Federal-aid construction contract in an amount in excess of $100,000 and subject to the overtime provisions of the Contract Work Hours and Safety Standards Act. These clauses shall be inserted in addition to the clauses required by 29 CFR 5.5(a) or 29 CFR 4.6. As used in this paragraph, the terms laborers and mechanics include watchpersons and guards.

1. Overtime requirements. No contractor or subcontractor contracting for any part of the contract work which may require or involve the employment of laborers or mechanics shall require or permit any such laborer or mechanic in any workweek in which he or she is employed on such work to work in excess of forty hours in such workweek unless such laborer or mechanic receives compensation at a rate not less than one and one-half times the basic rate of pay for all hours worked in excess of forty hours in such workweek. 29 CFR 5.5.

2. Violation; liability for unpaid wages; liquidated damages. In the event of any violation of the clause set forth in paragraph 1. of this section the contractor and any subcontractor responsible therefor shall be liable for the unpaid wages and interest from the date of the underpayment. In addition, such contractor and subcontractor shall be liable to the United States (in the case of work done under contract for the District of Columbia or a territory, to such District or to such territory), for liquidated damages. Such liquidated damages shall be computed with respect to each individual laborer or

mechanic, including watchpersons and guards, employed in violation of the clause set forth in paragraph 1. of this section, in the sum currently provided in 29 CFR 5.5(b)(2)* for each calendar day on which such individual was required or permitted to work in excess of the standard workweek of forty hours without payment of the overtime wages required by the clause set forth in paragraph 1. of this section.

* $31 as of January 15, 2023 (See 88 FR 88 FR 2210) as may be adjusted annually by the Department of Labor, pursuant to the Federal Civil Penalties Inflation Adjustment Act of 1990.

3. Withholding for unpaid wages and liquidated damages

a. *Withholding process.* The FHWA or the contracting agency may, upon its own action, or must, upon written request of an authorized representative of the Department of Labor, withhold or cause to be withheld from the contractor so much of the accrued payments or advances as may be considered necessary to satisfy the liabilities of the prime contractor or any subcontractor for any unpaid wages; monetary relief, including interest; and liquidated damages required by the clauses set forth in this section on this contract, any other Federal contract with the same prime contractor, or any other federally assisted contract subject to the Contract Work Hours and Safety Standards Act that is held by the same prime contractor (as defined in § 5.2). The necessary funds may be withheld from the contractor under this contract, any other Federal contract with the same prime contractor, or any other federally assisted contract that is subject to the Contract Work Hours and Safety Standards Act and is held by the same prime contractor, regardless of whether the other contract was awarded or assisted by the same agency, and such funds may be used to satisfy the contractor liability for which the funds were withheld.

b. *Priority to withheld funds.* The Department has priority to funds withheld or to be withheld in accordance with Section IV paragraph 2.a. or paragraph 3.a. of this section, or both, over claims to those funds by:

(1) A contractor's surety(ies), including without limitation performance bond sureties and payment bond sureties;

(2) A contracting agency for its reprocurement costs;

(3) A trustee(s) (either a court-appointed trustee or a U.S. trustee, or both) in bankruptcy of a contractor, or a contractor's bankruptcy estate;

(4) A contractor's assignee(s);

(5) A contractor's successor(s); or

(6) A claim asserted under the Prompt Payment Act, 31 U.S.C. 3901–3907.

4. Subcontracts. The contractor or subcontractor must insert in any subcontracts the clauses set forth in paragraphs 1. through 5. of this section and a clause requiring the subcontractors to include these clauses in any lower tier subcontracts. The prime contractor is responsible for compliance by any subcontractor or lower tier subcontractor with the clauses set forth in paragraphs 1. through 5. In the event of any violations of these clauses, the prime contractor and any subcontractor(s) responsible will be liable for any unpaid wages and monetary relief, including interest from the date of the underpayment or loss, due to any workers of lower-tier subcontractors, and associated liquidated damages and may be subject to debarment, as appropriate.

5. Anti-retaliation. It is unlawful for any person to discharge, demote, intimidate, threaten, restrain, coerce, blacklist, harass, or in any other manner discriminate against, or to cause any person to discharge, demote, intimidate, threaten, restrain, coerce, blacklist, harass, or in any other manner discriminate against, any worker or job applicant for:

a. Notifying any contractor of any conduct which the worker reasonably believes constitutes a violation of the Contract Work Hours and Safety Standards Act (CWHSSA) or its implementing regulations in this part;

b. Filing any complaint, initiating or causing to be initiated any proceeding, or otherwise asserting or seeking to assert on behalf of themselves or others any right or protection under CWHSSA or this part;

c. Cooperating in any investigation or other compliance action, or testifying in any proceeding under CWHSSA or this part; or

d. Informing any other person about their rights under CWHSSA or this part.

VI. SUBLETTING OR ASSIGNING THE CONTRACT

This provision is applicable to all Federal-aid construction contracts on the National Highway System pursuant to 23 CFR 635.116.

1. The contractor shall perform with its own organization contract work amounting to not less than 30 percent (or a greater percentage if specified elsewhere in the contract) of the total original contract price, excluding any specialty items designated by the contracting agency. Specialty items may be performed by subcontract and the amount of any such specialty items performed may be deducted from the total original contract price before computing the amount of work required to be performed by the contractor's own organization (23 CFR 635.116).

a. The term “perform work with its own organization” in paragraph 1 of Section VI refers to workers employed or leased by the prime contractor, and equipment owned or rented by the prime contractor, with or without operators. Such term does not include employees or equipment of a subcontractor or lower tier subcontractor, agents of the prime contractor, or any other assignees. The term may include payments for the costs of hiring leased employees from an employee leasing firm meeting all relevant Federal and State regulatory requirements. Leased employees may only be included in this term if the prime contractor meets all of the following conditions: (based on longstanding interpretation)

(1) the prime contractor maintains control over the supervision of the day-to-day activities of the leased employees;
(2) the prime contractor remains responsible for the quality of the work of the leased employees;

(3) the prime contractor retains all power to accept or exclude individual employees from work on the project; and

(4) the prime contractor remains ultimately responsible for the payment of predetermined minimum wages, the submission of payrolls, statements of compliance and all other Federal regulatory requirements.

b. "Specialty Items" shall be construed to be limited to work that requires highly specialized knowledge, abilities, or equipment not ordinarily available in the type of contracting organizations qualified and expected to bid or propose on the contract as a whole and in general are to be limited to minor components of the overall contract. 23 CFR 635.102.

2. Pursuant to 23 CFR 635.116(a), the contract amount upon which the requirements set forth in paragraph (1) of Section VI is computed includes the cost of material and manufactured products which are to be purchased or produced by the contractor under the contract provisions.

3. Pursuant to 23 CFR 635.116(c), the contractor shall furnish (a) a competent superintendent or supervisor who is employed by the firm, has full authority to direct performance of the work in accordance with the contract requirements, and is in charge of all construction operations (regardless of who performs the work) and (b) such other of its own organizational resources (supervision, management, and engineering services) as the contracting officer determines is necessary to assure the performance of the contract.

4. No portion of the contract shall be sublet, assigned or otherwise disposed of except with the written consent of the contracting officer, or authorized representative, and such consent when given shall not be construed to relieve the contractor of any responsibility for the fulfillment of the contract. Written consent will be given only after the contracting agency has assured that each subcontract is evidenced in writing and that it contains all pertinent provisions and requirements of the prime contract. (based on long-standing interpretation of 23 CFR 635.116).

5. The 30-percent self-performance requirement of paragraph (1) is not applicable to design-build contracts; however, contracting agencies may establish their own self-performance requirements. 23 CFR 635.116(d).

VII. SAFETY: ACCIDENT PREVENTION

This provision is applicable to all Federal-aid construction contracts and to all related subcontracts.

1. In the performance of this contract the contractor shall comply with all applicable Federal, State, and local laws governing safety, health, and sanitation (23 CFR Part 635). The contractor shall provide all safeguards, safety devices and protective equipment and take any other needed actions as it determines, or as the contracting officer may determine, to be reasonably necessary to protect the life and health of employees on the job and the safety of the public and to protect property in connection with the performance of the work covered by the contract. 23 CFR 635.108.

2. It is a condition of this contract, and shall be made a condition of each subcontract, which the contractor enters into pursuant to this contract, that the contractor and any subcontractor shall not permit any employee, in performance of the contract, to work in surroundings or under conditions which are unsanitary, hazardous or dangerous to his/her health or safety, as determined under construction safety and health standards (29 CFR Part 1926) promulgated by the Secretary of Labor, in accordance with Section 107 of the Contract Work Hours and Safety Standards Act (40 U.S.C. 3704). 29 CFR 1926.10.

3. Pursuant to 29 CFR 1926.3, it is a condition of this contract that the Secretary of Labor or authorized representative thereof, shall have right of entry to any site of contract performance to inspect or investigate the matter of compliance with the construction safety and health standards and to carry out the duties of the Secretary under Section 107 of the Contract Work Hours and Safety Standards Act (40 U.S.C. 3704).

VIII. FALSE STATEMENTS CONCERNING HIGHWAY PROJECTS

This provision is applicable to all Federal-aid construction contracts and to all related subcontracts.

In order to assure high quality and durable construction in conformity with approved plans and specifications and a high degree of reliability on statements and representations made by engineers, contractors, suppliers, and workers on Federal-aid highway projects, it is essential that all persons concerned with the project perform their functions as carefully, thoroughly, and honestly as possible. Willful falsification, distortion, or misrepresentation with respect to any facts related to the project is a violation of Federal law. To prevent any misunderstanding regarding the seriousness of these and similar acts, Form FHWA-1022 shall be posted on each Federal-aid highway project (23 CFR Part 635) in one or more places where it is readily available to all persons concerned with the project:

18 U.S.C. 1020 reads as follows:

"Whoever, being an officer, agent, or employee of the United States, or of any State or Territory, or whoever, whether a person, association, firm, or corporation, knowingly makes any false statement, false representation, or false report as to the character, quality, quantity, or cost of the material used or to be used, or the quantity or quality of the work performed or to be performed, or the cost thereof in connection with the submission of plans, maps, specifications, contracts, or costs of construction on any highway or related project submitted for approval to the Secretary of Transportation; or

Whoever knowingly makes any false statement, false representation, false report or false claim with respect to the character, quality, quantity, or cost of any work performed or to be performed, or materials furnished or to be furnished, in connection with the construction of any highway or related project approved by the Secretary of Transportation; or

Whoever knowingly makes any false statement or false representation as to material fact in any statement, certificate, or report submitted pursuant to provisions of the Federal-aid Roads Act approved July 11, 1916, (39 Stat. 355), as amended and supplemented;

Shall be fined under this title or imprisoned not more than 5 years or both."

IX. IMPLEMENTATION OF CLEAN AIR ACT AND FEDERAL WATER POLLUTION CONTROL ACT (42 U.S.C. 7606; 2 CFR 200.88; EO 11738)

This provision is applicable to all Federal-aid construction contracts in excess of $150,000 and to all related subcontracts. 48 CFR 2.101; 2 CFR 200.327.

By submission of this bid/proposal or the execution of this contract or subcontract, as appropriate, the bidder, proposer, Federal-aid construction contractor, subcontractor, supplier, or vendor agrees to comply with all applicable standards, orders or regulations issued pursuant to the Clean Air Act (42 U.S.C. 7401-7671q) and the Federal Water Pollution Control Act, as amended (33 U.S.C. 1251-1387). Violations must be reported to the Federal Highway Administration and the Regional Office of the Environmental Protection Agency. 2 CFR Part 200, Appendix II.

The contractor agrees to include or cause to be included the requirements of this Section in every subcontract, and further agrees to take such action as the contracting agency may direct as a means of enforcing such requirements. 2 CFR 200.327.

X. CERTIFICATION REGARDING DEBARMENT, SUSPENSION, INELIGIBILITY AND VOLUNTARY EXCLUSION

This provision is applicable to all Federal-aid construction contracts, design-build contracts, subcontracts, lower-tier subcontracts, purchase orders, lease agreements, consultant contracts or any other covered transaction requiring FHWA approval or that is estimated to cost $25,000 or more – as defined in 2 CFR Parts 180 and 1200. 2 CFR 180.220 and 1200.220.

1**. Instructions for Certification – First Tier Participants:**

a. By signing and submitting this proposal, the prospective first tier participant is providing the certification set out below.

b. The inability of a person to provide the certification set out below will not necessarily result in denial of participation in this covered transaction. The prospective first tier participant shall submit an explanation of why it cannot provide the certification set out below. The certification or explanation will be considered in connection with the department or agency's determination whether to enter into this transaction. However, failure of the prospective first tier participant to furnish a certification or an explanation shall disqualify such a person from participation in this transaction. 2 CFR 180.320.

c. The certification in this clause is a material representation of fact upon which reliance was placed when the contracting agency determined to enter into this transaction. If it is later determined that the prospective participant knowingly rendered an erroneous certification, in addition to other remedies available to the Federal Government, the contracting agency may terminate this transaction for cause of default. 2 CFR 180.325.

d. The prospective first tier participant shall provide immediate written notice to the contracting agency to whom this proposal is submitted if any time the prospective first tier participant learns that its certification was erroneous when submitted or has become erroneous by reason of changed circumstances. 2 CFR 180.345 and 180.350.

e. The terms "covered transaction," "debarred," "suspended," "ineligible," "participant," "person," "principal," and "voluntarily excluded," as used in this clause, are defined in 2 CFR Parts 180, Subpart I, 180.900-180.1020, and 1200. “First Tier Covered Transactions” refers to any covered transaction between a recipient or subrecipient of Federal funds and a participant (such as the prime or general contract). “Lower Tier Covered Transactions” refers to any covered transaction under a First Tier Covered Transaction (such as subcontracts). “First Tier Participant” refers to the participant who has entered into a covered transaction with a recipient or subrecipient of Federal funds (such as the prime or general contractor). “Lower Tier Participant” refers any participant who has entered into a covered transaction with a First Tier Participant or other Lower Tier Participants (such as subcontractors and suppliers).

f. The prospective first tier participant agrees by submitting this proposal that, should the proposed covered transaction be entered into, it shall not knowingly enter into any lower tier covered transaction with a person who is debarred, suspended, declared ineligible, or voluntarily excluded from participation in this covered transaction, unless authorized by the department or agency entering into this transaction. 2 CFR 180.330.

g. The prospective first tier participant further agrees by submitting this proposal that it will include the clause titled "Certification Regarding Debarment, Suspension, Ineligibility and Voluntary Exclusion-Lower Tier Covered Transactions," provided by the department or contracting agency, entering into this covered transaction, without modification, in all lower tier covered transactions and in all solicitations for lower tier covered transactions exceeding the $25,000 threshold. 2 CFR 180.220 and 180.300.

h. A participant in a covered transaction may rely upon a certification of a prospective participant in a lower tier covered transaction that is not debarred, suspended, ineligible, or voluntarily excluded from the covered transaction, unless it knows that the certification is erroneous. 2 CFR 180.300; 180.320, and 180.325. A participant is responsible for ensuring that its principals are not suspended, debarred, or otherwise ineligible to participate in covered transactions. 2 CFR 180.335. To verify the eligibility of its principals, as well as the eligibility of any lower tier prospective participants, each participant may, but is not required to, check the System for Award Management website (https://www.sam.gov/). 2 CFR 180.300, 180.320, and 180.325.

i. Nothing contained in the foregoing shall be construed to require the establishment of a system of records in order to render in good faith the certification required by this clause. The knowledge and information of the prospective participant is not required to exceed that which is normally possessed by a prudent person in the ordinary course of business dealings.

j. Except for transactions authorized under paragraph (f) of these instructions, if a participant in a covered transaction knowingly enters into a lower tier covered transaction with a person who is suspended, debarred, ineligible, or voluntarily excluded from participation in this transaction, in addition to other remedies available to the Federal Government, the department or agency may terminate this transaction for cause or default. 2 CFR 180.325.

* * * * *

2. Certification Regarding Debarment, Suspension, Ineligibility and Voluntary Exclusion – First Tier Participants:

a. The prospective first tier participant certifies to the best of its knowledge and belief, that it and its principals:

(1) Are not presently debarred, suspended, proposed for debarment, declared ineligible, or voluntarily excluded from participating in covered transactions by any Federal department or agency, 2 CFR 180.335;.

(2) Have not within a three-year period preceding this proposal been convicted of or had a civil judgment rendered against them for commission of fraud or a criminal offense in connection with obtaining, attempting to obtain, or performing a public (Federal, State, or local) transaction or contract under a public transaction; violation of Federal or State antitrust statutes or commission of embezzlement, theft, forgery, bribery, falsification or destruction of records, making false statements, or receiving stolen property, 2 CFR 180.800;

(3) Are not presently indicted for or otherwise criminally or civilly charged by a governmental entity (Federal, State or local) with commission of any of the offenses enumerated in paragraph (a)(2) of this certification, 2 CFR 180.700 and 180.800; and

(4) Have not within a three-year period preceding this application/proposal had one or more public transactions (Federal, State or local) terminated for cause or default. 2 CFR 180.335(d).

(5) Are not a corporation that has been convicted of a felony violation under any Federal law within the two-year period preceding this proposal (USDOT Order 4200.6 implementing appropriations act requirements); and

(6) Are not a corporation with any unpaid Federal tax liability that has been assessed, for which all judicial and administrative remedies have been exhausted, or have lapsed, and that is not being paid in a timely manner pursuant to an agreement with the authority responsible for collecting the tax liability (USDOT Order 4200.6 implementing appropriations act requirements).

b. Where the prospective participant is unable to certify to any of the statements in this certification, such prospective participant should attach an explanation to this proposal. 2 CFR 180.335 and 180.340.

* * * * *

3. **Instructions for Certification - Lower Tier Participants:**

(Applicable to all subcontracts, purchase orders, and other lower tier transactions requiring prior FHWA approval or estimated to cost $25,000 or more - 2 CFR Parts 180 and 1200). 2 CFR 180.220 and 1200.220.

a. By signing and submitting this proposal, the prospective lower tier participant is providing the certification set out below.

b. The certification in this clause is a material representation of fact upon which reliance was placed when this transaction was entered into. If it is later determined that the prospective lower tier participant knowingly rendered an erroneous certification, in addition to other remedies available to the Federal Government, the department, or agency with which this transaction originated may pursue available remedies, including suspension and/or debarment.

c. The prospective lower tier participant shall provide immediate written notice to the person to which this proposal is submitted if at any time the prospective lower tier participant learns that its certification was erroneous by reason of changed circumstances. 2 CFR 180.365.

d. The terms "covered transaction," "debarred," "suspended," "ineligible," "participant," "person," "principal," and "voluntarily excluded," as used in this clause, are defined in 2 CFR Parts 180, Subpart I, 180.900 – 180.1020, and 1200. You may contact the person to which this proposal is submitted for assistance in obtaining a copy of those regulations. “First Tier Covered Transactions” refers to any covered transaction between a recipient or subrecipient of Federal funds and a participant (such as the prime or general contract). “Lower Tier Covered Transactions” refers to any covered transaction under a First Tier Covered Transaction (such as subcontracts). “First Tier Participant” refers to the participant who has entered into a covered transaction with a recipient or subrecipient of Federal funds (such as the prime or general contractor). “Lower Tier Participant” refers any participant who has entered into a covered transaction with a First Tier Participant or other Lower Tier Participants (such as subcontractors and suppliers).

e. The prospective lower tier participant agrees by submitting this proposal that, should the proposed covered transaction be entered into, it shall not knowingly enter into any lower tier covered transaction with a person who is debarred, suspended, declared ineligible, or voluntarily excluded from participation in this covered transaction, unless authorized by the department or agency with which this transaction originated. 2 CFR 1200.220 and 1200.332.

f. The prospective lower tier participant further agrees by submitting this proposal that it will include this clause titled "Certification Regarding Debarment, Suspension, Ineligibility and Voluntary Exclusion-Lower Tier Covered Transaction," without modification, in all lower tier covered transactions and in all solicitations for lower tier covered transactions exceeding the $25,000 threshold. 2 CFR 180.220 and 1200.220.

g. A participant in a covered transaction may rely upon a certification of a prospective participant in a lower tier covered transaction that is not debarred, suspended, ineligible, or voluntarily excluded from the covered transaction, unless it knows that the certification is erroneous. A participant is responsible for ensuring that its principals are not suspended, debarred, or otherwise ineligible to participate in covered transactions. To verify the eligibility of its principals, as well as the eligibility of any lower tier prospective participants, each participant may, but is not required to, check the System for Award Management website (https://www.sam.gov/), which is compiled by the General Services Administration. 2 CFR 180.300, 180.320, 180.330, and 180.335.

h. Nothing contained in the foregoing shall be construed to require establishment of a system of records in order to render in good faith the certification required by this clause. The knowledge and information of participant is not required to exceed that which is normally possessed by a prudent person in the ordinary course of business dealings.

i. Except for transactions authorized under paragraph e of these instructions, if a participant in a covered transaction knowingly enters into a lower tier covered transaction with a person who is suspended, debarred, ineligible, or voluntarily

excluded from participation in this transaction, in addition to other remedies available to the Federal Government, the department or agency with which this transaction originated may pursue available remedies, including suspension and/or debarment. 2 CFR 180.325.

* * * * *

4. Certification Regarding Debarment, Suspension, Ineligibility and Voluntary Exclusion--Lower Tier Participants:

a. The prospective lower tier participant certifies, by submission of this proposal, that neither it nor its principals:

(1) is presently debarred, suspended, proposed for debarment, declared ineligible, or voluntarily excluded from participating in covered transactions by any Federal department or agency, 2 CFR 180.355;

(2) is a corporation that has been convicted of a felony violation under any Federal law within the two-year period preceding this proposal (USDOT Order 4200.6 implementing appropriations act requirements); and

(3) is a corporation with any unpaid Federal tax liability that has been assessed, for which all judicial and administrative remedies have been exhausted, or have lapsed, and that is not being paid in a timely manner pursuant to an agreement with the authority responsible for collecting the tax liability. (USDOT Order 4200.6 implementing appropriations act requirements)

b. Where the prospective lower tier participant is unable to certify to any of the statements in this certification, such prospective participant should attach an explanation to this proposal.

* * * * *

XI. CERTIFICATION REGARDING USE OF CONTRACT FUNDS FOR LOBBYING

This provision is applicable to all Federal-aid construction contracts and to all related subcontracts which exceed $100,000. 49 CFR Part 20, App. A.

1. The prospective participant certifies, by signing and submitting this bid or proposal, to the best of his or her knowledge and belief, that:

a. No Federal appropriated funds have been paid or will be paid, by or on behalf of the undersigned, to any person for influencing or attempting to influence an officer or employee of any Federal agency, a Member of Congress, an officer or employee of Congress, or an employee of a Member of Congress in connection with the awarding of any Federal contract, the making of any Federal grant, the making of any Federal loan, the entering into of any cooperative agreement, and the extension, continuation, renewal, amendment, or modification of any Federal contract, grant, loan, or cooperative agreement.

b. If any funds other than Federal appropriated funds have been paid or will be paid to any person for influencing or attempting to influence an officer or employee of any Federal agency, a Member of Congress, an officer or employee of Congress, or an employee of a Member of Congress in connection with this Federal contract, grant, loan, or cooperative agreement, the undersigned shall complete and submit Standard Form-LLL, "Disclosure Form to Report Lobbying," in accordance with its instructions.

2. This certification is a material representation of fact upon which reliance was placed when this transaction was made or entered into. Submission of this certification is a prerequisite for making or entering into this transaction imposed by 31 U.S.C. 1352. Any person who fails to file the required certification shall be subject to a civil penalty of not less than $10,000 and not more than $100,000 for each such failure.

3. The prospective participant also agrees by submitting its bid or proposal that the participant shall require that the language of this certification be included in all lower tier subcontracts, which exceed $100,000 and that all such recipients shall certify and disclose accordingly.

XII. USE OF UNITED STATES-FLAG VESSELS:

This provision is applicable to all Federal-aid construction contracts, design-build contracts, subcontracts, lower-tier subcontracts, purchase orders, lease agreements, or any other covered transaction. 46 CFR Part 381.

This requirement applies to material or equipment that is acquired for a specific Federal-aid highway project. 46 CFR 381.7. It is not applicable to goods or materials that come into inventories independent of an FHWA funded-contract.

When oceanic shipments (or shipments across the Great Lakes) are necessary for materials or equipment acquired for a specific Federal-aid construction project, the bidder, proposer, contractor, subcontractor, or vendor agrees:

1. To utilize privately owned United States-flag commercial vessels to ship at least 50 percent of the gross tonnage (computed separately for dry bulk carriers, dry cargo liners, and tankers) involved, whenever shipping any equipment, material, or commodities pursuant to this contract, to the extent such vessels are available at fair and reasonable rates for United States-flag commercial vessels. 46 CFR 381.7.

2. To furnish within 20 days following the date of loading for shipments originating within the United States or within 30 working days following the date of loading for shipments originating outside the United States, a legible copy of a rated, ‘on-board’ commercial ocean bill-of-lading in English for each shipment of cargo described in paragraph (b)(1) of this section to both the Contracting Officer (through the prime contractor in the case of subcontractor bills-of-lading) and to the Office of Cargo and Commercial Sealift (MAR-620), Maritime Administration, Washington, DC 20590. (MARAD requires copies of the ocean carrier's (master) bills of lading, certified onboard, dated, with rates and charges. These bills of lading may contain business sensitive information and therefore may be submitted directly to MARAD by the Ocean Transportation Intermediary on behalf of the contractor). 46 CFR 381.7.

ATTACHMENT A - EMPLOYMENT AND MATERIALS PREFERENCE FOR APPALACHIAN DEVELOPMENT HIGHWAY SYSTEM OR APPALACHIAN LOCAL ACCESS ROAD CONTRACTS (23 CFR 633, Subpart B, Appendix B)
This provision is applicable to all Federal-aid projects funded under the Appalachian Regional Development Act of 1965.

1. During the performance of this contract, the contractor undertaking to do work which is, or reasonably may be, done as on-site work, shall give preference to qualified persons who regularly reside in the labor area as designated by the DOL wherein the contract work is situated, or the subregion, or the Appalachian counties of the State wherein the contract work is situated, except:

a. To the extent that qualified persons regularly residing in the area are not available.

b. For the reasonable needs of the contractor to employ supervisory or specially experienced personnel necessary to assure an efficient execution of the contract work.

c. For the obligation of the contractor to offer employment to present or former employees as the result of a lawful collective bargaining contract, provided that the number of nonresident persons employed under this subparagraph (1c) shall not exceed 20 percent of the total number of employees employed by the contractor on the contract work, except as provided in subparagraph (4) below.

2. The contractor shall place a job order with the State Employment Service indicating (a) the classifications of the laborers, mechanics and other employees required to perform the contract work, (b) the number of employees required in each classification, (c) the date on which the participant estimates such employees will be required, and (d) any other pertinent information required by the State Employment Service to complete the job order form. The job order may be placed with the State Employment Service in writing or by telephone. If during the course of the contract work, the information submitted by the contractor in the original job order is substantially modified, the participant shall promptly notify the State Employment Service.

3. The contractor shall give full consideration to all qualified job applicants referred to him by the State Employment Service. The contractor is not required to grant employment to any job applicants who, in his opinion, are not qualified to perform the classification of work required.

4. If, within one week following the placing of a job order by the contractor with the State Employment Service, the State Employment Service is unable to refer any qualified job applicants to the contractor, or less than the number requested, the State Employment Service will forward a certificate to the contractor indicating the unavailability of applicants. Such certificate shall be made a part of the contractor's permanent project records. Upon receipt of this certificate, the contractor may employ persons who do not normally reside in the labor area to fill positions covered by the certificate, notwithstanding the provisions of subparagraph (1c) above.

5. The provisions of 23 CFR 633.207(e) allow the contracting agency to provide a contractual preference for the use of mineral resource materials native to the Appalachian region.

6. The contractor shall include the provisions of Sections 1 through 4 of this Attachment A in every subcontract for work which is, or reasonably may be, done as on-site work.

PART III – SPECIAL PROVISIONS

INTRODUCTION TO THE SPECIAL PROVISIONS

(January 4, 2024 APWA GSP, Option A)

The work on this project shall be accomplished in accordance with the *Standard Specifications for Road, Bridge and Municipal Construction*, 2025 edition, as issued by the Washington State Department of Transportation (WSDOT) and the American Public Works Association (APWA), Washington State Chapter (hereafter "Standard Specifications"). The Standard Specifications, as modified or supplemented by these Special Provisions, all of which are made a part of the Contract Documents, shall govern all of the Work.

These Special Provisions are made up of both General Special Provisions (GSPs) from various sources, which may have project-specific fill-ins; and project-specific Special Provisions. Each Provision either supplements, modifies, or replaces the comparable Standard Specification, or is a new Provision. The deletion, amendment, alteration, or addition to any subsection or portion of the Standard Specifications is meant to pertain only to that particular portion of the section, and in no way should it be interpreted that the balance of the section does not apply.

The GSPs are labeled under the headers of each GSP, with the effective date of the GSP and its source. For example:

(March 8, 2013 APWA GSP)
(April 1, 2013 WSDOTGSP)
(May 1, 2013 MLT GSP)Agency Special Provision

Project specific special provisions are labeled without a date as such:
(*****)

Also incorporated into the Contract Documents by reference are:

- *Manual on Uniform Traffic Control Devices for Streets and Highways*, currently adopted edition, with Washington State modifications, if any
- *Standard Plans for Road, Bridge and Municipal Construction*, WSDOT Manual M21-01, current edition
- *MLT Engineering Details & Specifications 2024 Version*

Contractor shall obtain copies of these publications, at Contractor's own expense.

Division 1
General Requirements

DESCRIPTION OF WORK

(March 13, 1995, WSDOT GSP)

This Contract provides for construction of a landscaped pedestrian plaza. Primary elements of construction include TESC, site excavation and grading, structural earth wall (incorporating both soil and light-weight (geofoam) backfill), storm drainage collection, reinforced concrete retaining walls, pedestrian seating, decorative (granite) wall caps, decorative concrete site paving and jointing, pedestrian railings, site lighting, signage, landscaping, irrigation and other work, all in accordance with the attached Contract Plans, these Contract Provisions, and the 2025 WSDOT Standard Specifications for Road, Bridge, and Municipal Construction.

1-01.3 Definitions

(January 19, 2022 APWA GSP)

Delete the heading **Completion Dates** and the three paragraphs that follow it, and replace them with the following:

Dates

Bid Opening Date
The date on which the Contracting Agency publicly opens and reads the Bids.

Award Date
The date of the formal decision of the Contracting Agency to accept the lowest responsible and responsive Bidder for the Work.

Contract Execution Date
The date the Contracting Agency officially binds the Agency to the Contract.

Notice to Proceed Date
The date stated in the Notice to Proceed on which the Contract time begins.

Substantial Completion Date
The day the Engineer determines the Contracting Agency has full and unrestricted use and benefit of the facilities, both from the operational and safety standpoint, any remaining traffic disruptions will be rare and brief, and only minor incidental work, replacement of temporary substitute facilities, plant establishment periods, or correction or repair remains for the Physical Completion of the total Contract.

Physical Completion Date
The day all of the Work is physically completed on the project. All documentation required by the Contract and required by law does not necessarily need to be furnished by the Contractor by this date.

Completion Date
The day all the Work specified in the Contract is completed and all the obligations of the Contractor under the contract are fulfilled by the Contractor. All documentation required by the Contract and required by law must be furnished by the Contractor before establishment of this date.

Final Acceptance Date
The date on which the Contracting Agency accepts the Work as complete.

Supplement this Section with the following:

All references in the Standard Specifications or WSDOT General Special Provisions, to the terms "Department of Transportation", "Washington State Transportation Commission", "Commission", "Secretary of Transportation", "Secretary", "Headquarters", and "State Treasurer" shall be revised to read "Contracting Agency".

All references to the terms "State" or "state" shall be revised to read "Contracting Agency" unless the reference is to an administrative agency of the State of Washington, a State statute or regulation, or the context reasonably indicates otherwise.

All references to "State Materials Laboratory" shall be revised to read "Contracting Agency designated location".

All references to "final contract voucher certification" shall be interpreted to mean the Contracting Agency form(s) by which final payment is authorized, and final completion and acceptance granted.

Additive
A supplemental unit of work or group of bid items, identified separately in the Bid Proposal, which may, at the discretion of the Contracting Agency, be awarded in addition to the base bid.

Alternate
One of two or more units of work or groups of bid items, identified separately in the Bid Proposal, from which the Contracting Agency may make a choice between different methods or material of construction for performing the same work.

Business Day
A business day is any day from Monday through Friday except holidays as listed in Section 1-08.5.

Contract Bond
The definition in the Standard Specifications for "Contract Bond" applies to whatever bond form(s) are required by the Contract Documents, which may be a combination of a Payment Bond and a Performance Bond.

Contract Documents
See definition for "Contract".

Contract Time
The period of time established by the terms and conditions of the Contract within which the Work must be physically completed.

Notice of Award
The written notice from the Contracting Agency to the successful Bidder signifying the Contracting Agency's acceptance of the Bid Proposal.

Notice to Proceed
The written notice from the Contracting Agency or Engineer to the Contractor authorizing and directing the Contractor to proceed with the Work and establishing the date on which the Contract time begins.

Traffic
Both vehicular and non-vehicular traffic, such as pedestrians, bicyclists, wheelchairs, and equestrian traffic.

1-02 BID PROCEDURES AND CONDITIONS

1-02.1 Prequalification of Bidders

Delete this section and replace it with the following:

1-02.1 Qualifications of Bidder
(February 17, 2026 APWA GSP Option B)

Before award of a public works contract, a Bidder must meet at least the minimum qualifications of RCW 39.04.350(1)(b-g) to be considered a responsible Bidder and qualified to be awarded a public works project.

1-02.2 Plans and Specifications
(June 27, 2011 APWA GSP)

Delete this section and replace it with the following:

Information as to where Bid Documents can be obtained or reviewed can be found in the Call for Bids (Advertisement for Bids) for the work.

After award of the contract, plans and specifications will be issued to the Contractor at no cost as detailed below:

To Prime Contractor	No. of Sets	Basis of Distribution
Reduced plans (11" x 17")	**2**	Furnished automatically upon award.

Contract Provisions	**2**	Furnished automatically upon award.
Large plans (e.g., 22" x 34")	**2**	Furnished only upon request.

Additional plans and Contract Provisions may be obtained by the Contractor from the source stated in the Call for Bids, at the Contractor's own expense.

1-02.5 Proposal Forms
(February 17, 2026 APWA GSP)

Delete this section and replace it with the following:

The Proposal Form will identify the project and its location and describe the work. It will also list estimated quantities, units of measurement, the items of work, and the materials to be furnished at the unit bid prices. The bidder shall complete spaces on the proposal form that call for, but are not limited to, unit prices; extensions; summations; the total bid amount; signatures; date; and, where applicable, retail sales taxes and acknowledgment of addenda; the bidder's name, address, telephone number, and signature. Bids shall be in legible figures (not words) written in ink or typed and expressed in U.S. dollars. The required certifications are included as part of the Proposal Form.

The Contracting Agency reserves the right to arrange the proposal forms with alternates and additives, if such be to the advantage of the Contracting Agency. The bidder shall bid on all alternates and additives set forth in the Proposal Form unless otherwise specified.

Preparation Of Proposal

1-02.6 Preparation of Proposal
(February 17, 2026 APWA GSP, Option B)

Revise the fourth paragraph to read:

Subcontractor's List
The Bidder shall submit with the Bid the completed Subcontractor List included in the Contracting Agency Proposal Package. If a Subcontractor List Form is not included in the package, use DOT Form 271-015LP. The Form shall contain the following:

1. Subcontractors who will perform the Work of structural steel installation, rebar installation, heating, ventilation, air conditioning, and plumbing as described in RCW 18.106 and electrical as described in RCW 19.28.

2. The Work those subcontractors will perform on the Contract as described in RCW 39.04.350(1)(b-g), and

3. No more than one subcontractor for each category of Work identified, except, when subcontractors vary with Bid alternates, in which case the Bidder shall identify which subcontractor will be used for which alternate.

(*February 17, 2026 APWA GSP, Option C*)

The first sentence of the second paragraph is revised to read as follows:

All prices shall be in legible figures (not words) written in ink or typed, and expressed in U.S. dollars.

Supplement the second paragraph with the following:

4. If a minimum bid amount has been established for any item, the unit or lump sum price must equal or exceed the minimum amount stated.

Delete the last two paragraphs, and replace them with the following:

The Bidder shall submit with their Bid a completed Contractor Certification Wage Law Compliance form, provided by the Contracting Agency. Failure to return this certification as part of the Bid Proposal package will make this Bid Nonresponsive and ineligible for Award. A Contractor Certification of Wage Law Compliance form is included in the Proposal Forms.

The Bidder shall make no stipulation on the Bid Form, nor qualify the bid in any manner.

A bid by a corporation shall be executed in the corporate name, by the president or a vice president (or other corporate officer accompanied by evidence of authority to sign).

A bid by a partnership shall be executed in the partnership name and signed by a partner.

A bid by a joint venture shall be executed in the joint venture name and signed by a member of the joint venture.

Bidder Questionnaire

(November 4, 2025 WSDOT GSP, Option 7)

Section 1-02.6 is supplemented with the following:

The Bidder shall submit with their Bid a completed Bidder Questionnaire form (WSDOT Form #272-022). This shall be filled out for each firm who submitted a bid or quote in attempt to participate in the project whether they were successful or not and include the following information:

1. Firm name;

2. Firm address including ZIP code;

3. Firm's status as a DBE or non-DBE;

4. NAICS code applicable to each scope of work the firm sought to perform in its bid;

5. Age of the firm; and

6. The annual gross receipts of the firm. The Bidder may obtain this information by asking each firm to indicate into what gross receipts bracket they fit (less than $1 million; $1-3 million; $3-6 million; $6-10 million; etc.) rather than requesting an exact figure from the firm.

This form shall be received at the same location and no later than the time required for the delivery of the Proposal. Failure to comply with this requirement will cause this Bid to be considered irregular in accordance with Section 1-02.13.

The Contractor may correct errors to items 2 through 6 above on the Bidder Questionnaire form for a period up to 48 hours after bid opening. Bidder Questionnaire forms that are still incorrect after the correction period will be determined irregular. New Firm/Subcontractors may not be added to the form during the correction period. A Bidder Questionnaire form that fails to list a Firm/Subcontractor that appears on a different form will be considered irregular in accordance with Section 1-02.13.

1-02.7 Bid Deposit
(February 17, 2026 APWA GSP)

Revise the third sentence of the first paragraph to read:

For projects that are selected by the Contracting Agency to be Bid electronically, the proposal bond may be in either a physical format, or an electronic format via PDF or Surety 2000.

Supplement this section with the following:

Bid bonds shall contain the following:

1. Contracting Agency-assigned number for the project;
2. Name of the project;
3. The Contracting Agency named as obligee;
4. The amount of the bid bond stated either as a dollar figure or as a percentage which represents five percent of the maximum bid amount that could be awarded;
5. Signature of the bidder's officer empowered to sign official statements. The signature of the person authorized to submit the bid should agree with the signature on the bond, and the title of the person must accompany the said signature;
6. The signature of the surety's officer empowered to sign the bond and the power of attorney.

If so stated in the Contract Provisions, bidder must use the bond form included in the Contract Provisions.

If so stated in the Contract Provisions, cash will not be accepted for a bid deposit.

(May 11, 2021 MLT GSP)

The second and third sentences of the first paragraph are revised to read:

> This bid deposit may be certified check, postal money order, or a proposal bond (Surety Bond), cash will not be accepted. For projects that are selected by the Contracting Agency to be Bid electronically, the proposal bond may be in either a physical format, or an electronic format via Surety2000.

1-02.9 Delivery of Proposal

(November 21, 2025 APWA GSP, Option D)

Delete this section and replace it with the following:

GENERAL

Each Proposal (including all required attachments) shall be submitted to the Contracting Agency by one of the following methods:

1. Electronically upload bid documents via QuestCDN VirtuBid. Instructions for uploading bid documents are located in the instructions to bidders.
2. Deliver hard copy Bid documents in a sealed envelope, with the Project Name and Project Number as stated in the Call for Bids clearly marked on the outside of the envelope, or as otherwise required in the Bid Documents, to ensure proper handling and delivery. Deliver to:

   City of Mountlake Terrace
   Attn: Donnelle Dayao
   23204 58th Ave W.
   Mountlake Terrace, WA 98043

Proposals that are received as required will be publicly opened and read as specified in Section 1-02.12. The Contracting Agency will not open or consider any Bid Proposal that is received after the time specified in the Call for Bids for receipt of Bid Proposals or received in a location other than that specified in the Call for Bids. The Contracting Agency will not open or consider any "Supplemental Information" that is received after the time specified or received in a location other than that specified in the Call for Bids.

If an emergency or unanticipated event interrupts normal work processes of the Contracting Agency so that Proposals cannot be received at the office designated for receipt of bids as specified in Section 1-02.12 the time specified for receipt of the Proposal will be deemed to be extended to the same time of day specified in the solicitation on the first workday on which the normal work processes of the Contracting Agency resume.

Supplemental bid information submitted after the Proposal submittal but within 48 hours of the time and date the Proposal is due, the document(s) shall be submitted as follows:

1. By facsimile to the following FAX number: 425-775-0420, or

2. By e-mail to the following e-mail address: ddayao@mltwa.gov, or
3. By (agency provided electronically submitted): QuestCDN VirtuBid

All other information required to be submitted with the Bid Proposal must be submitted with the Bid Proposal itself, at the time stated in the Call for Bids.

1-02.10 Withdrawing, Revising, or Supplementing Proposal

(February 17, 2026 APWA GSP)

Delete this section, and replace it with the following:

After submitting a physical or an electronic bid, if allowed under 1-02.9, Bid Proposal to the Contracting Agency, the Bidder may withdraw, revise, or supplement it if:

1. The Bidder submits a written request signed by an authorized person and physically delivers it to the place designated for receipt of Bid Proposals, if a physical Bid Proposal was submitted, or recalled electronically via electronic method described in 1-02.9 if an electronic Bid Proposal was submitted, and
2. The Contracting Agency receives the request before the time set for receipt of Bid Proposals, and
3. The revised or supplemented Bid Proposal (if any) is received by the Contracting Agency before the time set for receipt of Bid Proposals.

If the Bidder's request to withdraw, revise, or supplement its Bid Proposal is received before the time set for receipt of Bid Proposals, the Contracting Agency will return the unopened Proposal package to the Bidder. The Bidder must then submit the revised or supplemented package in its entirety. If the Bidder does not submit a revised or supplemented package before the time set for receipt of Bid Proposals, then its bid shall be considered withdrawn.

Late revised or supplemented Bid Proposals or late withdrawal requests will be date recorded by the Contracting Agency and returned unopened. Requests to withdraw, revise, or supplement a Bid Proposal may be submitted by the following methods:

1. In person:

   City of Mountlake Terrace
   Attn: Donnelle Dayao
   23204 58th Ave W.
   Mountlake Terrace, WA 98043

2. Online:

   QuestCDN VirtuBid
   home.questcdn.com

1-02.13 Irregular Proposals

(November 21, 2025 APWA GSP)

Delete this section and replace it with the following:

1. A Proposal will be considered irregular and will be rejected if:
   a. The Bidder is not prequalified when so required;
   b. The Bidder adds provisions reserving the right to reject or accept the Award, or enter into the Contract;
   c. A price per unit cannot be determined from the Bid Proposal;
   d. The Proposal form is not properly executed;
   e. The Bidder fails to submit or properly complete a subcontractor list as required in Section 1-02.6;
   f. The Bidder fails to submit the Bidder Questionnaire, if applicable, as required by Section 1-02.6, or if the documentation that is submitted fails to meet the requirements of the Special Provisions; or
   g. The Bid Proposal does not constitute a definite and unqualified offer to meet the material terms of the Bid invitation.

2. A Proposal may be considered irregular and may be rejected if:
   a. The Proposal does not include a unit price for every Bid item;
   b. Any of the unit prices are excessively unbalanced (either above or below the amount of a reasonable Bid) to the potential detriment of the Contracting Agency;
   c. The authorized Proposal Form furnished by the Contracting Agency is not used or is altered;
   d. The completed Proposal form contains unauthorized additions, deletions, alternate Bids, or conditions;
   e. Receipt of Addenda is not acknowledged;
   f. A member of a joint venture or partnership and the joint venture or partnership submit Proposals for the same project (in such an instance, both Bids may be rejected); or
   g. If Proposal form entries are not made in ink.

1-02.14 Disqualification of Bidders

(May 17, 2018 APWA GSP, Option A)

Delete this section and replace it with the following:

A Bidder will be deemed not responsible if the Bidder does not meet the mandatory bidder responsibility criteria in RCW 39.04.350(1), as amended.

The Contracting Agency will verify that the Bidder meets the mandatory bidder responsibility criteria in RCW 39.04.350(1). To assess bidder responsibility, the Contracting Agency reserves the right to request documentation as needed from the Bidder and third parties concerning the Bidder's compliance with the mandatory bidder responsibility criteria.

If the Contracting Agency determines the Bidder does not meet the mandatory bidder responsibility criteria in RCW 39.04.350(1) and is therefore not a responsible Bidder, the Contracting Agency shall notify the Bidder in writing, with the reasons for its determination. If the Bidder disagrees with this determination, it may appeal the determination within two (2) business days of the Contracting Agency's determination by presenting its appeal and any additional information to the Contracting Agency. The Contracting Agency will consider the appeal and any additional information before issuing its final determination. If the final determination affirms that the Bidder is not responsible, the Contracting Agency will not execute a contract with any other Bidder until at least two business days after the Bidder determined to be not responsible has received the Contracting Agency's final determination.

1-03 AWARD AND EXECUTION OF CONTRACT

1-03.1 Consideration of Bids

(December 30, 2022 APWA GSP)

Revise the first paragraph to read:

After opening and reading proposals, the Contracting Agency will check them for correctness of extensions of the prices per unit and the total price. If a discrepancy exists between the price per unit and the extended amount of any bid item, the price per unit will control. If a minimum bid amount has been established for any item and the bidder's unit or lump sum price is less than the minimum specified amount, the Contracting Agency will unilaterally revise the unit or lump sum price, to the minimum specified amount and recalculate the extension. The total of extensions, corrected where necessary, including sales taxes where applicable and such additives and/or alternates as selected by the Contracting Agency, will be used by the Contracting Agency for award purposes and to fix the Awarded Contract Price amount and the amount of the contract bond.

1-03.3 Execution of Contract

(February 17, 2026 APWA GSP, Option A)

Revise this section to read:

Copies of the Contract Provisions, including the unsigned Form of Contract, will be available for signature by the successful bidder on the first business day following award. The number of copies to be executed by the Contractor will be determined by the Contracting Agency.

Within 20 calendar days after the award date, the successful Bidder shall return the signed Contracting Agency-prepared Contract, an insurance certification as required by Section 1-07.18, a satisfactory bond as required by law and Section 1-03.4, the Transfer of Coverage form for the Construction Stormwater General Permit with sections I, III, and VIII completed when provided. Before execution of the Contract by the Contracting Agency, the successful Bidder shall provide, if required, any of the following: pre-Award information required by the Contracting Agency as listed under Section 1-02.15, proof of licensure for electrical, HVAC, or plumbing subcontractors. If the Prime Contractor lists

themselves as performing electrical, HVAC, or plumbing they are required to submit proof of licensure prior to execution.

Until the Contracting Agency executes a Contract, no Proposal shall bind the Contracting Agency nor shall any Work begin within the project limits or within Contracting Agency-furnished sites. The Contractor shall bear all risks for any Work begun outside such areas and for any materials ordered before the Contract is executed by the Contracting Agency.

If the Bidder experiences circumstances beyond their control that prevents return of the Contract documents within the calendar days after the Award date stated above, the Contracting Agency may grant up to a maximum of 20 additional calendar days for return of the documents, provided the Contracting Agency deems the circumstances warrant it.

1-03.4 Contract Bond
(July 23, 2015 APWA GSP)

Delete the first paragraph and replace it with the following:

The successful bidder shall provide executed payment and performance bond(s) for the full contract amount. The bond may be a combined payment and performance bond; or be separate payment and performance bonds. In the case of separate payment and performance bonds, each shall be for the full contract amount. The bond(s) shall:

1. Be on Contracting Agency-furnished form(s);
2. Be signed by an approved surety (or sureties) that:
   a. Is registered with the Washington State Insurance Commissioner, and
   b. Appears on the current Authorized Insurance List in the State of Washington published by the Office of the Insurance Commissioner,
3. Guarantee that the Contractor will perform and comply with all obligations, duties, and conditions under the Contract, including but not limited to the duty and obligation to indemnify, defend, and protect the Contracting Agency against all losses and claims related directly or indirectly from any failure:
   a. Of the Contractor (or any of the employees, subcontractors, or lower tier subcontractors of the Contractor) to faithfully perform and comply with all contract obligations, conditions, and duties, or
   b. Of the Contractor (or the subcontractors or lower tier subcontractors of the Contractor) to pay all laborers, mechanics, subcontractors, lower tier subcontractors, material person, or any other person who provides supplies or provisions for carrying out the work;
4. Be conditioned upon the payment of taxes, increases, and penalties incurred on the project under titles 50, 51, and 82 RCW; and
5. Be accompanied by a power of attorney for the Surety's officer empowered to sign the bond; and

6. Be signed by an officer of the Contractor empowered to sign official statements (sole proprietor or partner). If the Contractor is a corporation, the bond(s) must be signed by the president or vice president, unless accompanied by written proof of the authority of the individual signing the bond(s) to bind the corporation (i.e., corporate resolution, power of attorney, or a letter to such effect signed by the president or vice president).

1-03.7 Judicial Review

(December 30, 2022 APWA GSP)

Revise this section to read:

All decisions made by the Contracting Agency regarding the Award and execution of the Contract or Bid rejection shall be conclusive subject to the scope of judicial review permitted under Washington Law. Such review, if any, shall be timely filed in the Superior Court of the county where the Contracting Agency headquarters is located, provided that where an action is asserted against a county, RCW 36.01.050 shall control venue and jurisdiction.

1-04 SCOPE OF THE WORK

1-04.2 Coordination of Contract Documents, Plans, Special Provisions, Specifications, and Addenda

(December 30, 2022 APWA GSP)

Revise the second paragraph to read:

Any inconsistency in the parts of the contract shall be resolved by following this order of precedence (e.g., 1 presiding over 2, 2 over 3, 3 over 4, and so forth):

1. Addenda,
2. Proposal Form,
3. Special Provisions,
4. Contract Plans,
5. Standard Specifications,
6. Contracting Agency's Standard Plans or Details (if any), and
7. WSDOT Standard Plans for Road, Bridge, and Municipal Construction.

1-04.4 Changes

(January 19, 2022 APWA GSP)

The first two sentences of the last paragraph of Section 1-04.4 are deleted.

1-05 CONTROL OF WORK

1-05.1(2) Requests for Information (RFI)

(November 4, 2024 WSDOT, Option 1)

The fourth paragraph of Section 1-05.1(2) is revised to read:

The Contractor may submit a RFI for one of the following reasons:

1. The Contractor believes there is information missing from the Contract Documents (Missing Information).

2. The Contractor believes a clarification of one or more of the Contract requirements is necessary (Clarification).

3. The Contractor needs to substitute a material that provides an equal or better level of performance as the one specified in the Contract (RFC - Material Substitution). Requests shall indicate the location(s), quantity, and shall describe how the material provides an equal or better level of performance as the material originally specified.

4. The Contractor requests a change to the Contract requirements for a reason other than one listed in items 1-3 of this Section (RFC - Other). To be considered, the request must not meet the requirements of a Value Engineering Change Proposal. To be considered, the request shall qualify as a Minor Change in accordance with Section 1-04.4(1) and shall describe how the change is beneficial to the project.

1-05.4 Conformity with and Deviations from Plans Stakes
(September 3, 2024 WSDOT GSP, Option 1)

Section 1-05.4 is supplemented with the following:

Contractor Surveying - Structure

The Contracting Agency has provided primary survey control in the Plans.

The Contractor shall be responsible for setting, maintaining, and resetting all alignment stakes, slope stakes, and grades necessary for the construction of bridges, noise walls, retaining walls, buried structures, and marine structures. Except for the survey control data to be furnished by the Contracting Agency, calculations, surveying, and measuring required for setting and maintaining the necessary lines and grades shall be the Contractor's responsibility.

The Contractor shall inform the Engineer when monuments are discovered that were not identified in the Plans and construction activity may disturb or damage the monuments. All monuments noted on the plans “DO NOT DISTURB” shall be protected throughout the length of the project or be replaced at the Contractor’s expense.

Detailed survey records shall be maintained, including a description of the work performed on each shift, the methods utilized, and the control points used. The record shall be adequate to allow the survey to be reproduced. A copy of each day's record shall be provided to the Engineer within three working days after the end of the shift.

The meaning of words and terms used in this provision shall be as listed in "Definitions of Surveying and Associated Terms" current edition, published by the American Congress on Surveying and Mapping and the American Society of Civil Engineers.

The survey work by the Contractor shall include but not be limited to the following:

1. Verify the primary horizontal and vertical control furnished by the Contracting Agency and expand into secondary control by adding stakes and hubs as well as additional survey control needed for the project. Provide descriptions of secondary control to the Contracting Agency. The description shall include coordinates and elevations of all secondary control points.

2. Establish, by placing hubs and/or marked stakes, the location with offsets of foundation shafts and piles.

3. Establish offsets to footing centerline of bearing for structure excavation.

4. Establish offsets to footing centerline of bearing for footing forms.

5. Establish wing wall, retaining wall, noise wall, and buried structure horizontal alignment.

6. Establish retaining wall top of wall profile grade.

7. Establish buried structure profile grade.

8. Establish elevation benchmarks for all substructure formwork.

9. Check elevations at top of footing concrete line inside footing formwork immediately prior to concrete placement.

10. Check column location and pier centerline of bearing at top of footing immediately prior to concrete placement.

11. Establish location and plumbness of column forms, and monitor column plumbness during concrete placement.

12. Establish pier cap and crossbeam top and bottom elevations and centerline of bearing.

13. Check pier cap and crossbeam top and bottom elevations and centerline of bearing prior to and during concrete placement.

14. Establish grout pad locations and elevations.

15. Establish structure bearing locations and elevations, including locations of anchor bolt assemblies.

16. Establish box girder bottom slab grades and locations.

17. Establish girder and/or web wall profiles and locations.

18. Establish diaphragm locations and centerline of bearing.

19. Establish roadway slab alignment, grades and provide dimensions from top of girder to top of roadway slab. Set elevations for deck paving machine rails.

20. Establish traffic barrier and curb profile.

21. Profile all girders prior to the placement of any deadload or construction live load that may affect the girder's profile.

22. Establish locations for marine structures including fixed and floating berthing structures, vehicle and pedestrian foundations and spans, and marine-based buildings.

The Contractor shall provide the Contracting Agency copies of any calculations and staking data when requested by the Engineer.

The Contractor shall submit the computed elevations at the top of bridge decks as a Type 2 Working Drawing. To compute top of bridge deck elevations, elevations shall be taken at the tenth points along the centerline of each girder web from center-to-center of bearing. For girders exceeding 100 feet in length, the elevations shall be taken at equivalent intervals not to exceed 10 feet.

The Contractor shall ensure a surveying accuracy within the following tolerances:

	Vertical	Horizontal
1. Stationing on structures		±0.02 feet
2. Alignment on structures		±0.02 feet
3. Superstructure elevations	±0.01 feet variation from plan elevation	
4. Substructure	±0.02 feet variation from Plan grades.	

Buried structures shall be within the tolerances described in Section 6-20.3.

The Contracting Agency may spot-check the Contractor's surveying. These spot checks will not change the requirements for normal checking by the Contractor.

When staking the following items, the Contractor shall perform independent checks from different secondary control to ensure that the points staked for these items are within the specified survey accuracy tolerances:

Piles

Shafts
Footings
Columns

The Contractor shall calculate coordinates for the points associated with piles, shafts, footings and columns. The Contracting Agency will verify these coordinates prior to issuing approval to the Contractor for commencing with the survey work. The Contracting Agency will require up to seven calendar days from the date the data is received to issuing approval.

Contract work to be performed using contractor-provided stakes shall not begin until the stakes are approved by the Contracting Agency. Such approval shall not relieve the Contractor of responsibility for the accuracy of the stakes.

Payment

Payment will be made for the following bid item when included in the proposal:

"Structure Surveying", lump sum.

The lump sum contract price for "Structure Surveying" shall be full pay for all labor, equipment, materials, and supervision utilized to perform the Work specified, including any resurveying, checking, correction of errors, replacement of missing or damaged stakes, and coordination efforts.

1-05.4 Conformity with and Deviations from Plans Stakes
(September 3, 2024 WSDOT GSP, Option 2)

Section 1-05.4 is supplemented with the following:

Contractor Surveying - Roadway

The Contracting Agency has provided primary survey control in the Plans.

The Contractor shall be responsible for setting, maintaining, and resetting all alignment stakes, slope stakes, and grades necessary for the construction of the roadbed, drainage, surfacing, paving, channelization and pavement marking, illumination and signals, guardrails and barriers, and signing. Except for the survey control data to be furnished by the Contracting Agency, calculations, surveying, and measuring required for setting and maintaining the necessary lines and grades shall be the Contractor's responsibility.

The Contractor shall inform the Engineer when monuments are discovered that were not identified in the Plans and construction activity may disturb or damage the monuments. All monuments noted on the plans “DO NOT DISTURB” shall be protected throughout the length of the project or be replaced at the Contractors expense.

Detailed survey records shall be maintained, including a description of the work performed on each shift, the methods utilized, and the control points used. The record shall be adequate to

allow the survey to be reproduced. A copy of each day's record shall be provided to the Engineer within three working days after the end of the shift.

The meaning of words and terms used in this provision shall be as listed in "Definitions of Surveying and Associated Terms" current edition, published by the American Congress on Surveying and Mapping and the American Society of Civil Engineers.

The survey work shall include but not be limited to the following:

1. Verify the primary horizontal and vertical control furnished by the Contracting Agency, and expand into secondary control by adding stakes and hubs as well as additional survey control needed for the project. Provide descriptions of secondary control to the Contracting Agency. The description shall include coordinates and elevations of all secondary control points.

2. Establish, the centerlines of all alignments, by placing hubs, stakes, or marks on centerline or on offsets to centerline at all curve points (PCs, PTs, and PIs) and at points on the alignments spaced no further than 50 feet.

3. Establish clearing limits, placing stakes at all angle points and at intermediate points not more than 50 feet apart. The clearing and grubbing limits shall be 5 feet beyond the toe of a fill and 10 feet beyond the top of a cut unless otherwise shown in the Plans.

4. Establish grading limits, placing slope stakes at centerline increments not more than 50 feet apart. Establish offset reference to all slope stakes. If Global Positioning Satellite (GPS) Machine Controls are used to provide grade control, then slope stakes may be omitted at the discretion of the Contractor.

5. Establish the horizontal and vertical location of all drainage features, placing offset stakes to all drainage structures and to pipes at a horizontal interval not greater than 25 feet.

6. Establish roadbed and surfacing elevations by placing stakes at the top of subgrade and at the top of each course of surfacing. Subgrade and surfacing stakes shall be set at horizontal intervals not greater than 50 feet in tangent sections, 25 feet in curve sections with a radius less than 300 feet, and at 10-foot intervals in intersection radii with a radius less than 10 feet. Transversely, stakes shall be placed at all locations where the roadway slope changes and at additional points such that the transverse spacing of stakes is not more than 12 feet. If GPS Machine Controls are used to provide grade control, then roadbed and surfacing stakes may be omitted at the discretion of the Contractor.

7. Establish intermediate elevation benchmarks as needed to check work throughout the project.

8. Provide references for paving pins at 25-foot intervals or provide simultaneous surveying to establish location and elevation of paving pins as they are being placed.

9. For all other types of construction included in this provision, (including but not limited to channelization and pavement marking, illumination and signals, guardrails and barriers, and signing) provide staking and layout as necessary to adequately locate, construct, and check the specific construction activity.

10. Contractor shall determine if changes are needed to the profiles or roadway sections shown in the Contract Plans in order to achieve proper smoothness and drainage where matching into existing features, such as a smooth transition from new pavement to existing pavement. The Contractor shall submit these changes to the Engineer for review and approval 10 days prior to the beginning of work.

The Contractor shall provide the Contracting Agency copies of any calculations and staking data when requested by the Engineer.

The Contractor shall ensure a surveying accuracy within the following tolerances:

	Vertical	Horizontal
Slope stakes	±0.10 feet	±0.10 feet
Subgrade grade stakes set 0.04 feet below grade	±0.01 feet	±0.5 feet (parallel to alignment) ±0.1 feet (normal to alignment)
Stationing on roadway	N/A	±0.1 feet
Alignment on roadway	N/A	±0.04 feet
Surfacing grade stakes	±0.01 feet	±0.5 feet (parallel to alignment) ±0.1 feet (normal to alignment)
Roadway paving pins for surfacing or paving	±0.01 feet	±0.2 feet (parallel to alignment) ±0.1 feet (normal to alignment)

The Contracting Agency may spot-check the Contractor's surveying. These spot checks will not change the requirements for normal checking by the Contractor.

When staking roadway alignment and stationing, the Contractor shall perform independent checks from different secondary control to ensure that the points staked are within the specified survey accuracy tolerances.

The Contractor shall calculate coordinates for the alignment. The Contracting Agency will verify these coordinates prior to issuing approval to the Contractor for commencing with the work. The Contracting Agency will require up to seven calendar days from the date the data is received.

Contract work to be performed using contractor-provided stakes shall not begin until the stakes are approved by the Contracting Agency. Such approval shall not relieve the Contractor of responsibility for the accuracy of the stakes.

Stakes shall be marked in accordance with Standard Plan A10.10. When stakes are needed that are not described in the Plans, then those stakes shall be marked, at no additional cost to the Contracting Agency as ordered by the Engineer.

Payment

Payment will be made for the following bid item when included in the proposal:

"Roadway Surveying", lump sum.

The lump sum contract price for "Roadway Surveying" shall be full pay for all labor, equipment, materials, and supervision utilized to perform the Work specified, including any resurveying, checking, correction of errors, replacement of missing or damaged stakes, and coordination efforts.

1-05.7 Removal of Defective and Unauthorized Work

(October 1, 2005 APWA GSP)

Supplement this section with the following:

If the Contractor fails to remedy defective or unauthorized work within the time specified in a written notice from the Engineer, or fails to perform any part of the work required by the Contract Documents, the Engineer may correct and remedy such work as may be identified in the written notice, with Contracting Agency forces or by such other means as the Contracting Agency may deem necessary.

If the Contractor fails to comply with a written order to remedy what the Engineer determines to be an emergency situation, the Engineer may have the defective and unauthorized work corrected immediately, have the rejected work removed and replaced, or have work the Contractor refuses to perform completed by using Contracting Agency or other forces. An emergency situation is any situation when, in the opinion of the Engineer, a delay in its remedy could be potentially unsafe, or might cause serious risk of loss or damage to the public.

Direct or indirect costs incurred by the Contracting Agency attributable to correcting and remedying defective or unauthorized work, or work the Contractor failed or refused to perform, shall be paid by the Contractor. Payment will be deducted by the Engineer from monies due, or to become due, the Contractor. Such direct and indirect costs shall include in particular, but without limitation, compensation for additional professional services

required, and costs for repair and replacement of work of others destroyed or damaged by correction, removal, or replacement of the Contractor's unauthorized work.

No adjustment in contract time or compensation will be allowed because of the delay in the performance of the work attributable to the exercise of the Contracting Agency's rights provided by this Section.

The rights exercised under the provisions of this section shall not diminish the Contracting Agency's right to pursue any other avenue for additional remedy or damages with respect to the Contractor's failure to perform the work as required.

1-05.11 Final Inspection

Delete this section and replace it with the following:

1-05.11 Final Inspections and Operational Testing

(October 1, 2005 APWA GSP)

1-05.11(1) Substantial Completion Date

When the Contractor considers the work to be substantially complete, the Contractor shall so notify the Engineer and request the Engineer establish the Substantial Completion Date. The Contractor's request shall list the specific items of work that remain to be completed in order to reach physical completion. The Engineer will schedule an inspection of the work with the Contractor to determine the status of completion. The Engineer may also establish the Substantial Completion Date unilaterally.

If, after this inspection, the Engineer concurs with the Contractor that the work is substantially complete and ready for its intended use, the Engineer, by written notice to the Contractor, will set the Substantial Completion Date. If, after this inspection the Engineer does not consider the work substantially complete and ready for its intended use, the Engineer will, by written notice, so notify the Contractor giving the reasons therefor.

Upon receipt of written notice concurring in or denying substantial completion, whichever is applicable, the Contractor shall pursue vigorously, diligently and without unauthorized interruption, the work necessary to reach Substantial and Physical Completion. The Contractor shall provide the Engineer with a revised schedule indicating when the Contractor expects to reach substantial and physical completion of the work.

The above process shall be repeated until the Engineer establishes the Substantial Completion Date and the Contractor considers the work physically complete and ready for final inspection.

1-05.11(2) Final Inspection and Physical Completion Date

When the Contractor considers the work physically complete and ready for final inspection, the Contractor by written notice, shall request the Engineer to schedule a final inspection. The Engineer will set a date for final inspection. The Engineer and the Contractor will then make a final inspection and the Engineer will notify the Contractor in

writing of all particulars in which the final inspection reveals the work incomplete or unacceptable. The Contractor shall immediately take such corrective measures as are necessary to remedy the listed deficiencies. Corrective work shall be pursued vigorously, diligently, and without interruption until physical completion of the listed deficiencies. This process will continue until the Engineer is satisfied the listed deficiencies have been corrected.

If action to correct the listed deficiencies is not initiated within 7 days after receipt of the written notice listing the deficiencies, the Engineer may, upon written notice to the Contractor, take whatever steps are necessary to correct those deficiencies pursuant to Section 1-05.7.
The Contractor will not be allowed an extension of contract time because of a delay in the performance of the work attributable to the exercise of the Engineer's right hereunder.

Upon correction of all deficiencies, the Engineer will notify the Contractor and the Contracting Agency, in writing, of the date upon which the work was considered physically complete. That date shall constitute the Physical Completion Date of the contract, but shall not imply acceptance of the work or that all the obligations of the Contractor under the contract have been fulfilled.

1-05.11(3) Operational Testing

It is the intent of the Contracting Agency to have at the Physical Completion Date a complete and operable system. Therefore when the work involves the installation of machinery or other mechanical equipment; street lighting, electrical distribution or signal systems; irrigation systems; buildings; or other similar work it may be desirable for the Engineer to have the Contractor operate and test the work for a period of time after final inspection but prior to the physical completion date. Whenever items of work are listed in the Contract Provisions for operational testing they shall be fully tested under operating conditions for the time period specified to ensure their acceptability prior to the Physical Completion Date. During and following the test period, the Contractor shall correct any items of workmanship, materials, or equipment which prove faulty, or that are not in first class operating condition. Equipment, electrical controls, meters, or other devices and equipment to be tested during this period shall be tested under the observation of the Engineer, so that the Engineer may determine their suitability for the purpose for which they were installed. The Physical Completion Date cannot be established until testing and corrections have been completed to the satisfaction of the Engineer.

The costs for power, gas, labor, material, supplies, and everything else needed to successfully complete operational testing, shall be included in the unit contract prices related to the system being tested, unless specifically set forth otherwise in the proposal.

Operational and test periods, when required by the Engineer, shall not affect a manufacturer's guaranties or warranties furnished under the terms of the contract.

1-05.13 Superintendents, Labor, and Equipment of Contractor
(August 14, 2013 APWA GSP)

Delete the sixth and seventh paragraphs of this section.

1-05.14 Cooperation with other contractors
(March 13, 1995 WSDOT GSP, Option 1)

Section 1-05.14 is supplemented with the following:

Other Contracts or Other Work

It is anticipated that the following work adjacent to or within the limits of this project will be performed by others during the course of this project and will require coordination of the work:

Installation of cameras at intersection of 236th St SW and Van Ry Blvd.

1-05.15 Method of Serving Notices
(January 4, 2024 APWA GSP)

Revise the second paragraph to read:

> All correspondence from the Contractor shall be served and directed to the Engineer. All correspondence from the Contractor constituting any notification, notice of protest, notice of dispute, or other correspondence constituting notification required to be furnished under the Contract, must be written in paper format, hand delivered or sent via certified mail delivery service with return receipt requested to the Engineer's office. Electronic copies such as e-mails or electronically delivered copies of correspondence will not constitute such notice and will not comply with the requirements of the Contract.

1-05.16 Water and Power

Add the following new section:

1-05.16 Water and Power (NEW SECTION)
(October 1, 2005 APWA GSP)

The Contractor shall make necessary arrangements, and shall bear the costs for power and water necessary for the performance of the work, unless the contract includes power and water as a pay item.

1-05.18 Record Drawings

Add the following new section:

1-05.18 Record Drawings (NEW SECTION)
(March 8, 2013 APWA GSP)

The Contractor shall maintain one set of full size plans for Record Drawings, updated with clear and accurate red-lined field revisions on a daily basis, and within 2 business days after receipt of information that a change in Work has occurred. The Contractor shall not conceal any work until the required information is recorded.

This Record Drawing set shall be used for this purpose alone, shall be kept separate from other Plan sheets, and shall be clearly marked as Record Drawings. These Record Drawings shall be kept on site at the Contractor's field office, and shall be available for review by the Contracting Agency at all times. The Contractor shall bring the Record Drawings to each progress meeting for review.

The preparation and upkeep of the Record Drawings is to be the assigned responsibility of a single, experienced, and qualified individual. The quality of the Record Drawings, in terms of accuracy, clarity, and completeness, is to be adequate to allow the Contracting Agency to modify the computer-aided drafting (CAD) Contract Drawings to produce a complete set of Record Drawings for the Contracting Agency without further investigative effort by the Contracting Agency.

The Record Drawing markups shall document all changes in the Work, both concealed and visible. Items that must be shown on the markups include but are not limited to:

- Actual dimensions, arrangement, and materials used when different than shown in the Plans.
- Changes made by Change Order or Field Order.
- Changes made by the Contractor.
- Accurate locations of storm sewer, sanitary sewer, water mains and other water appurtenances, structures, conduits, light standards, vaults, width of roadways, sidewalks, landscaping areas, building footprints, channelization and pavement markings, etc. Include pipe invert elevations, top of castings (manholes, inlets, etc.).

If the Contract calls for the Contracting Agency to do all surveying and staking, the Contracting Agency will provide the elevations at the tolerances the Contracting Agency requires for the Record Drawings.

When the Contract calls for the Contractor to do the surveying/staking, the applicable tolerance limits include, but are not limited to the following:

	Vertical	Horizontal
As-built sanitary & storm invert and grate elevations	± 0.01 foot	± 0.01 foot
As-built monumentation	± 0.001 foot	± 0.001 foot

As-built waterlines, inverts, valves, hydrants	± 0.10 foot	± 0.10 foot
As-built ponds/swales/water features	± 0.10 foot	± 0.10 foot
As-built buildings (fin. Floor elev.)	± 0.01 foot	± 0.10 foot
As-built gas lines, power, TV, Tel, Com	± 0.10 foot	± 0.10 foot
As-built signs, signals, etc.	N/A	± 0.10 foot

Making Entries on the Record Drawings:

- Use erasable colored pencil (not ink) for all markings on the Record Drawings, conforming to the following color code:
- Additions - Red
- Deletions - Green
- Comments - Blue
- Dimensions - Graphite
- Provide the applicable reference for all entries, such as the change order number, the request for information (RFI) number, or the approved shop drawing number.
- Date all entries.
- Clearly identify all items in the entry with notes similar to those in the Contract Drawings (such as pipe symbols, centerline elevations, materials, pipe joint abbreviations, etc.).

The Contractor shall certify on the Record Drawings that said drawings are an accurate depiction of built conditions, and in conformance with the requirements detailed above. The Contractor shall submit final Record Drawings to the Contracting Agency. Contracting Agency acceptance of the Record Drawings is one of the requirements for achieving Physical Completion.

Payment will be made for the following bid item:

Record Drawings (Minimum Bid $ 5,000)	Lump Sum

Payment for this item will be made on a prorated monthly basis for work completed in accordance with this section up to 75% of the lump sum bid. The final 25% of the lump sum item will be paid upon submittal and approval of the completed Record Drawings set prepared in conformance with these Special Provisions.

A minimum bid amount has been entered in the Bid Proposal for this item. The Contractor must bid at least that amount.

1-06 CONTROL OF MATERIAL

1-06 Control of Material

(March 20, 2025 WSDOT GSP, Option 2A)

Section 1-06 is supplemented with the following:

Buy America Requirements

General Requirements

In accordance with Buy America requirements contained in 23 CFR 635.410 and 2 CFR 184, the following materials must be produced in the United States:

1. All Iron or Steel Products used in the project. This means all manufacturing processes, from the initial melting stage through the application of coatings, occurred in the United States.

2. All Manufactured Products used in the project. This means the manufactured product was manufactured in the United States.

3. All Construction Materials used in the project. This means that all manufacturing processes for the construction material occurred in the United States.

An article, material, or supply will be classified in one of four categories: 1) Iron or Steel Product, 2) Manufactured Product, 3) Construction Material, or 4) Excluded Material. Only a single category will apply to an item except as follows:

1. With respect to precast concrete products that are classified as Manufactured Products, the components of precast concrete products that consist wholly or predominantly of iron, steel, or combination of both shall meet the requirements for and be tracked as an Iron or Steel Product. The item shall also meet the requirements for a Manufactured Product, and the cost of the iron or steel components shall be included in determining if the Manufactured Product was produced in the United States.

2. With respect to intelligent transportation systems and other electronic hardware systems that are classified as Manufactured Products, the cabinets or other enclosures of such systems that consist wholly or predominantly of iron, steel, or a combination of both, shall meet the requirements for and be tracked as an Iron or Steel Products. The item shall also meet the requirements for a Manufactured Product and the cost of the iron or steel components shall be included in determining if the manufactured product was produced in the United States.

Some contract items are composed of multiple parts that may fall into different categories. Individual components will be categorized as a Construction Material, a Manufactured Product, an Iron or Steel Product, or an excluded material based on their composition when they arrive at the staging area or work site.

Definitions

1. Construction Material: Defined as any article, material, or supply brought to the construction site for incorporation into the final product. Construction materials include an article, material, or supply that is or consists primarily of:

a. Non-ferrous metals including all manufacturing processes, from initial smelting or melting through final shaping, coating, and assembly;

b. Plastic and polymer-based products including all manufacturing processes, from initial combination of constituent plastic or polymer-based inputs, or, where applicable, constituent composite materials, until the item is in its final form);

c. Glass including all manufacturing processes, from initial batching and melting of raw materials through annealing, cooling, and cutting);

d. Fiber optic cable (includes drop cable) including all manufacturing processes, from initial ribboning (if applicable), through buffering, fiber stranding and jacketing, (fiber optic cable also includes the standards for glass and optical fiber);

e. Optical fiber including all manufacturing processes, from the initial preform fabrication stage, though the completion of the draw;

f. Lumber including all manufacturing processes, from initial debarking through treatment and planing;

g. Drywall including all manufacturing processes, from initial blending of mined or synthetic gypsum plaster and additives through cutting and drying of sandwiched panels; or

h. Engineered wood including all manufacturing processes from the initial combination of constituent materials until the wood product is in its final form.

If a Construction Material is not manufactured in the United States it shall be considered a Foreign Construction Material.

2. Excluded Material: A material where Buy America requirements do not apply. This includes the following:

a. Materials excluded by Section 70917(c) of the Buy America, Build America Act with respect to aggregates this includes cement and cementitious materials, aggregates such as stone, sand, or gravel or aggregate binding agents or additives. These materials shall be classified as excluded materials based on the composition when brought to the work site. It also includes combinations of these excluded materials when mixtures of Excluded Materials are delivered to the work site without final form for incorporation into the project (i.e. wet concrete and HMA). If they are formed prior to delivery, they are a Manufactured Product and not an Excluded Material.

b. Temporary materials that are not being permanently incorporated into the project.

c. Raw or minimal processed materials where the article, material, or supply does not fall into any of the categories, as it is not a Manufactured Product, an Iron or Steel Product, or a Construction Material and when these materials are delivered to the work site without final form for incorporation into the product (i.e. seed mix and topsoil). If they are formed prior to delivery, they are a Manufactured Product and not an Excluded Material.

3. Iron or Steel Product: An article, material, or supply that consist of wholly or predominantly of iron or steel or a combination of both. To be considered predominantly of iron or steel or a

combination of both means that the cost of the iron and steel content exceeds 50 percent of the total cost of all its components. The cost of iron and steel is based on a good faith estimate of the cost of the iron or steel components.

4. Manufactured Product: A Manufactured Product includes any item produced as a result of the manufacturing process. Items that should be treated as a manufactured product (rather than a construction material) are: 1) items that consist of two or more of the listed construction materials that have been combined together through a manufacturing process, and 2) items that include at least one of the listed construction materials as defined above, combined with a material that is not listed through a manufacturing process.

If a product is not an Iron or Steel Product, a Construction Material, or an Excluded Material, it is a Manufactured Product.

5. United States: To further define the coverage, a domestic product is a manufactured steel construction material that was produced in one of the 50 states, the District of Columbia, Puerto Rico, or in the territories and possessions of the United States.

Iron or Steel Product Requirements

Iron or Steel Products that are permanently incorporated into the project shall consist of American-made materials only. Buy America requirements do not apply to temporary steel or iron items, e.g., temporary sheet piling, temporary bridges, steel scaffolding and falsework.

Minor amounts of foreign steel and iron may be utilized in this project provided the cost of the foreign material used does not exceed one-tenth of one percent of the total contract cost or $2,500.00, whichever is greater.

American-made material is defined as material having all manufacturing processes occurring domestically.

If domestically produced steel billets or iron ingots are exported outside of the United States, as defined above, for any manufacturing process then the resulting product does not conform to the Buy America requirements. Additionally, products manufactured domestically from foreign source steel billets or iron ingots do not conform to the Buy America requirements because the initial melting and mixing of alloys to create the material occurred in a foreign country.

Manufacturing begins with the initial melting and mixing and continues through the coating stage. Any process which modifies the chemical content, the physical size or shape, or the final finish is considered a manufacturing process. The processes include rolling, extruding, machining, bending, grinding, drilling, welding, and coating. The action of applying a coating to steel or iron is deemed a manufacturing process. Coating includes epoxy coating, galvanizing, aluminizing, painting, and any other coating that protects or enhances the value of steel or iron. Any process from the original reduction from ore to the finished product constitutes a manufacturing process for iron.

Due to a nationwide waiver, Buy America requirements do not apply to raw materials (iron ore and alloys), scrap (recycled steel or iron), and pig iron ore processed, pelletized, and reduced iron ore.

The following are considered to be steel manufacturing processes:

1. Production of steel by any of the following processes:

    a. Open hearth furnace.

    b. Basic oxygen.

    c. Electric furnace.

    d. Direct reduction.

2. Rolling, heat treating, and any other similar processing.

3. Fabrication of the products:

    a. Spinning wire into cable or strand.

    b. Corrugating and rolling into culverts.

    c. Shop fabrication.

A certification of materials origin will be required for all iron or steel products prior to such items being incorporated into the permanent work. The Contractor will not receive payment until the certification is received by the Engineer. The certification shall be on WSDOT Form 350-109 provided by the Engineer, or such other form the Contractor chooses, provided it contains the same information as WSDOT Form 350-109.

Manufactured Products

Due to a nationwide waiver, Buy America requirements do not apply to Manufactured Products except as follows:

1. When a precast concrete product is classified as a Manufactured Product, the components that are an Iron or Steel Product shall follow the "Iron and Steel Requirements" of this Specification.

2. When an electronic hardware system such as an intelligent transportation system is classified as a Manufactured Product, the cabinets and the other enclosures of such systems that are an Iron or Steel Product shall follow the "Iron and Steel Requirements" of this Specification.

Construction Material Requirements

A Contractor provided certification of materials origin will be required before each progress estimate or payment. The Contractor will not receive payment until the certification is received by the Engineer. The Contractor shall certify that all Construction Materials installed during the current progress estimate period meet the Buy America requirements. The certification shall be on WSDOT Form 350-111 provided by the Engineer, or such other form the Contractor chooses, provided it contains the same information as WSDOT Form 350-111.

Waiver for De Minimis Costs

Minor amounts of Foreign Construction Materials may be utilized in this project, provided that the total cost of the Foreign Construction Materials does not exceed $1,000,000 and does not exceed 5 percent of the total applicable material costs calculated as follows:

$$\frac{Total\ Cost\ of\ Foreign\ Construction\ Materials}{Total\ Applicable\ Materials\ Costs} < 0.05$$

The total applicable material costs shall be the sum of the costs all Construction Materials, all Iron or Steel Products, and all Manufactured Products. Total applicable material costs does not include Excluded Materials.

Patented/Proprietary Items
(April 22, 2025 APWA GSP)

Section 1-06 is supplemented with the following:

The Contracting Agency has specified patented/proprietary items, some of which contain foreign steel and/or iron.

The contractor shall be made aware that the total value of the foreign steel associated with the patented/proprietary items is $563.00 and will apply toward the minor amounts of foreign steel and iron allowed herein.

1-06.2(2)B Financial Incentive
(January 4, 2024 AWPA GSP)

Replace the first sentence of this Section with the following:

The maximum Composite Pay Factor shall be 1.00.

1-06.6 Recycled Materials
(January 4, 2016 APWA GSP)

Delete this section, including its subsections, and replace it with the following:

The Contractor shall make their best effort to utilize recycled materials in the construction of the project. Approval of such material use shall be as detailed elsewhere in the Standard Specifications.

Prior to Physical Completion the Contractor shall report the quantity of recycled materials that were utilized in the construction of the project for each of the items listed in Section 9-03.21. The report shall include hot mix asphalt, recycled concrete aggregate, recycled glass, steel furnace slag and other recycled materials (e.g. utilization of on-site material and aggregates from concrete returned to the supplier). The Contractor's report shall be provided on DOT form 350-075 Recycled Materials Reporting.

1-07 LEGAL RELATIONS AND RESPONSIBILITIES TO THE PUBLIC

1-07.1 Laws to be Observed

(October 1, 2005 APWA GSP)

Supplement this section with the following:

In cases of conflict between different safety regulations, the more stringent regulation shall apply.

The Washington State Department of Labor and Industries shall be the sole and paramount administrative agency responsible for the administration of the provisions of the Washington Industrial Safety and Health Act of 1973 (WISHA).

The Contractor shall maintain at the project site office, or other well known place at the project site, all articles necessary for providing first aid to the injured. The Contractor shall establish, publish, and make known to all employees, procedures for ensuring immediate removal to a hospital, or doctor's care, persons, including employees, who may have been injured on the project site. Employees should not be permitted to work on the project site before the Contractor has established and made known procedures for removal of injured persons to a hospital or a doctor's care.

The Contractor shall have sole responsibility for the safety, efficiency, and adequacy of the Contractor's plant, appliances, and methods, and for any damage or injury resulting from their failure, or improper maintenance, use, or operation. The Contractor shall be solely and completely responsible for the conditions of the project site, including safety for all persons and property in the performance of the work. This requirement shall apply continuously, and not be limited to normal working hours. The required or implied duty of the Engineer to conduct construction review of the Contractor's performance does not, and shall not, be intended to include review and adequacy of the Contractor's safety measures in, on, or near the project site.

Unmanned Aircraft Systems (UAS)

(March 9, 2026, WSDOT GSP Option 7)

Section 1-07.1 is supplemented with the following:

The procurement and/or use of any drone (UAS) on this Contract shall comply with the following directives:

- National Defense Authorization Act (NDAA) – American Security Drone Act of 2023 (ASDA, Pub. L. No. 118-31).
- Office of Management and Budget Memorandum M-26-02 – Restrictions on using federal funds to purchase or operate prohibited foreign UAS.

Contractors, subcontractors, and lower-tier subcontractors shall not procure, operate, maintain, or process data from prohibited UAS manufactured or assembled by "covered foreign entities"

as defined in the Federal Acquisition Security Council (FASC) in the performance of this Contract.

1-07.2 State Taxes

Delete this section, including its sub-sections, in its entirety and replace it with the following:

1-07.2 State Sales Tax
(June 27, 2011 APWA GSP)

The Washington State Department of Revenue has issued special rules on the State sales tax. Sections 1-07.2(1) through 1-07.2(3) are meant to clarify those rules. The Contractor should contact the Washington State Department of Revenue for answers to questions in this area. The Contracting Agency will not adjust its payment if the Contractor bases a bid on a misunderstood tax liability.

The Contractor shall include all Contractor-paid taxes in the unit bid prices or other contract amounts. In some cases, however, state retail sales tax will not be included. Section 1-07.2(2) describes this exception.

The Contracting Agency will pay the retained percentage (or release the Contract Bond if a FHWA-funded Project) only if the Contractor has obtained from the Washington State Department of Revenue a certificate showing that all contract-related taxes have been paid (RCW 60.28.051). The Contracting Agency may deduct from its payments to the Contractor any amount the Contractor may owe the Washington State Department of Revenue, whether the amount owed relates to this contract or not. Any amount so deducted will be paid into the proper State fund.

1-07.2(1) State Sales Tax — Rule 171

WAC 458-20-171, and its related rules, apply to building, repairing, or improving streets, roads, etc., which are owned by a municipal corporation, or political subdivision of the state, or by the United States, and which are used primarily for foot or vehicular traffic. This includes storm or combined sewer systems within and included as a part of the street or road drainage system and power lines when such are part of the roadway lighting system. For work performed in such cases, the Contractor shall include Washington State Retail Sales Taxes in the various unit bid item prices, or other contract amounts, including those that the Contractor pays on the purchase of the materials, equipment, or supplies used or consumed in doing the work.

1-07.2(2) State Sales Tax — Rule 170

WAC 458-20-170, and its related rules, apply to the constructing and repairing of new or existing buildings, or other structures, upon real property. This includes, but is not limited to, the construction of streets, roads, highways, etc., owned by the state of Washington; water mains and their appurtenances; sanitary sewers and sewage disposal systems unless such sewers and disposal systems are within, and a part of, a street or road drainage system; telephone, telegraph, electrical power distribution lines, or other conduits or lines in or above streets or roads, unless such power lines become a part of a street or road

lighting system; and installing or attaching of any article of tangible personal property in or to real property, whether or not such personal property becomes a part of the realty by virtue of installation.

For work performed in such cases, the Contractor shall collect from the Contracting Agency, retail sales tax on the full contract price. The Contracting Agency will automatically add this sales tax to each payment to the Contractor. For this reason, the Contractor shall not include the retail sales tax in the unit bid item prices, or in any other contract amount subject to Rule 170, with the following exception.

Exception: The Contracting Agency will not add in sales tax for a payment the Contractor or a subcontractor makes on the purchase or rental of tools, machinery, equipment, or consumable supplies not integrated into the project. Such sales taxes shall be included in the unit bid item prices or in any other contract amount.

1-07.2(3) Services

The Contractor shall not collect retail sales tax from the Contracting Agency on any contract wholly for professional or other services (as defined in Washington State Department of Revenue Rules 138 and 244).

1-07.6 Permits and Licenses

(January 2, 2018 WSDOT GSP, Option 1)

Section 1-07.6 is supplemented with the following:

The Contracting Agency has obtained the below-listed permit(s) for this project. A copy of the permit(s) is attached as an appendix for informational purposes. Copies of these permits, including a copy of the Transfer of Coverage form, when applicable, are required to be onsite at all times. Contact with the permitting agencies, concerning the below-listed permit(s), shall be made through the Engineer with the exception of when the Construction Stormwater General Permit coverage is transferred to the Contractor, direct communication with the Department of Ecology is allowed. The Contractor shall be responsible for obtaining Ecology's approval for any Work requiring additional approvals (e.g. Request for Chemical Treatment Form). The Contractor shall obtain additional permits as necessary. All costs to obtain and comply with additional permits shall be included in the applicable Bid items for the Work involved.

See Appendix G for existing Permits.

(*****)

1. City Permits – Civil, Electrical, Landscaping or Irrigation, Building (Art Piece), Wall 1 and Wall 2 permits have been issued under the jurisdiction of the City. The contractor will be required to create a contractor portal account through the City's website to be linked to the permits at no cost.

The Contractor is responsible for obtaining the following permits:

2. Building Permit for Structural Earth Wall 3,.

1-07.7 Load Limits
(March 13, 1995 WSDOT GSP, Option 6)

Section 1-07.7 is supplemented with the following:

If the sources of materials provided by the Contractor necessitates hauling over roads other than State Highways, the Contractor shall, at the Contractor's expense, make all arrangements for the use of the haul routes.

1-07.8 High-Visibility Apparel
(November 4, 2024 WSDOT GSP, Option 1)

The third and fourth paragraphs of Section 1-07.8 are revised to read

High-visibility garments shall always be the outermost garments worn in a manner to ensure 360 degrees of uninterrupted background and retroreflective material encircling the torso.

High-visibility garments shall be labeled as, and in a condition compliant with the ANSI/ISEA 107-2015 publication entitled “American National Standard for High-Visibility Safety Apparel and Accessories,” or equivalent revisions.

1-07.8(1) Traffic Control Personnel
(November 4, 2024 WSDOT GSP, Option 1)

Section 1-07.8(1) is revised to read:

All personnel performing the Work described in Section 1-10 (including traffic control supervisors, flaggers, and others performing traffic control labor of any kind) shall comply with the following:

1. During daylight hours with clear visibility, workers shall wear a high-visibility ANSI/ISEA 107 Type R Class 2 or 3 garment with background material that are fluorescent yellow-green, fluorescent orange-red, or fluorescent red in color; and a high visibility hardhat that is white, yellow, yellow-green, orange, or red in color; and

2. During hours of darkness (½ hour before sunset to ½ hour after sunrise) or other low-visibility conditions (snow, fog, etc.), workers shall wear a high-visibility ANSI/ISEA 107 Type R Class 2 or 3 garment with background material that are fluorescent yellow-green, fluorescent orange-red, or fluorescent red in color; a high-visibility lower garment meeting ANSI/ISEA 107 Class E, and a high visibility hardhat marked with at least 12 square inches of retroreflective material applied to provide 360 degrees of visibility.

1-07.9 Wages
(January 6, 2026 WSDOT GSP, Option 2)

Section 1-07.9(1) is supplemented with the following:

The Federal wage rates incorporated in this contract have been established by the Secretary of Labor under United States Department of Labor General Decision No. WA20260001.

The State rates incorporated in this contract are applicable to all construction activities associated with this contract.

1-07.9(5)A Required Documents
(February 17, 2026 APWA GSP, Option A)

Revise this section to read:

> All Statements of Intent to Pay Prevailing Wages and Affidavits of Wages Paid, including a signed Statement of Compliance for Federal-aid projects, shall be submitted to the Engineer and entered into the State L&I online Prevailing Wage Intent & Affidavit (PWIA) system. In addition to entries made in the PWIA system, all Certified Payrolls must be submitted weekly to the Contracting Agency with a legally valid signature.

1-07.11 Requirements for Nondiscrimination
(May 5, 2025 WSDOT GSP, Option 1)

Section 1-07.11 is supplemented with the following:

Requirement for Affirmative Action to Ensure Equal Employment Opportunity

In accordance with 41 CFR § 60-4.2, the clauses contained in 1-4 below are required to be included in this Contract. Nothing in this contract alters the Contractor's responsibility to comply with all applicable Federal regulations, including but not limited to 41 CFR part 60 as currently existing or later amended.

1. The Contractor's attention is called to the "Equal Opportunity Clause and the Standard Federal Equal Employment Opportunity Construction Contract Specifications" set forth herein.

2. The goals and timetables for minority and female participation set by the Office of Federal Contract Compliance Programs, expressed in percentage terms for the Contractor's aggregate work force in each construction craft and in each trade on all construction work in the covered area, are as follows:

Women - Statewide

Timetable	Goal
Until further notice	6.9%

Minorities - by Standard Metropolitan Statistical Area (SMSA)

Spokane, WA:
SMSA Counties:
Spokane, WA 2.8
WA Spokane.
Non-SMSA Counties 3.0
WA Adams; WA Asotin; WA Columbia; WA Ferry; WA Garfield; WA Lincoln, WA Pend Oreille; WA Stevens; WA Whitman.

Richland, WA
SMSA Counties:
Richland Kennewick, WA 5.4
WA Benton; WA Franklin.
Non-SMSA Counties 3.6
WA Walla Walla.

Yakima, WA:
SMSA Counties:
Yakima, WA 9.7
WA Yakima.
Non-SMSA Counties 7.2
WA Chelan; WA Douglas; WA Grant; WA Kittitas; WA Okanogan.

Seattle, WA:
SMSA Counties:
Seattle Everett, WA 7.2
WA King; WA Snohomish.
Tacoma, WA 6.2
WA Pierce.
Non-SMSA Counties 6.1
WA Clallam; WA Grays Harbor; WA Island; WA Jefferson; WA Kitsap; WA Lewis; WA Mason; WA Pacific; WA San Juan; WA Skagit; WA; Thurston; WA Whatcom.

Portland, OR:
SMSA Counties:
Portland, OR-WA 4.5
WA Clark.
Non-SMSA Counties 3.8
WA Cowlitz; WA Klickitat; WA Skamania; WA Wahkiakum.

These goals are applicable to each nonexempt Contractor's total on-site construction workforce, regardless of whether or not part of that workforce is performing work on a Federal, or federally assisted project, contract, or subcontract until further notice. Compliance with these goals and timetables is enforced by the Office of Federal Contract compliance Programs.

The Contractor's compliance with the Executive Order and the regulations in 41 CFR Part 60-4 shall be based on its implementation of the Equal Opportunity Clause, specific affirmative action obligations required by the specifications set forth in 41 CFR 60-4.3(a), and its efforts to meet the goals. The hours of minority and female employment and training must be substantially uniform throughout the length of the contract, in each construction craft and in each trade, and the Contractor shall make a good faith effort to employ minorities and women evenly on each of its projects. The transfer of minority or female employees or trainees from Contractor to Contractor or from project to project for the sole purpose of meeting the Contractor's goals shall be a violation of the contract, the Executive Order and the regulations in 41 CFR Part 60-4. Compliance with the goals will be measured against the total work hours performed.

3. The Contractor shall provide written notification to the Office of Federal Contract Compliance Programs (OFCCP) within 10 working days of award of any construction subcontract in excess of $10,000 or more that are Federally funded, at any tier for construction work under the contract resulting from this solicitation. The notification shall list the name, address and telephone number of the subcontractor; employer identification number of the subcontractor; estimated dollar amount of the subcontract; estimated starting and completion dates of the subcontract; and the geographical area in which the contract is to be performed. The notification shall be sent to:

   U.S. Department of Labor
   Office of Federal Contract Compliance Programs Pacific Region
   Attn: Regional Director
   San Francisco Federal Building
   90 – 7th Street, Suite 18-300
   San Francisco, CA 94103(415) 625-7800
   Phone (415) 625-7799 Fax

4. As used in this Notice, and in the contract resulting from this solicitation, the Covered Area is as designated herein.

In accordance with 41 CFR § 60-4.3, the clauses contained in 1-15 below are required to be included in this Contract. Nothing in this Contract alters the Contractor's responsibility to comply with all applicable Federal regulations, including but not limited to 41 CFR part 60 as currently existing or later amended.

Standard Federal Equal Employment Opportunity Construction Contract Specifications

1. As used in these specifications:

   a. “Covered Area” means the geographical area described in the solicitation from which this contract resulted;

   b. “Director” means Director, Office of Federal Contract Compliance Programs, United States Department of Labor, or any person to whom the Director delegates authority;

   c. “Employer Identification Number” means the Federal Social Security number used on the Employer's Quarterly Federal Tax Return, U.S. Treasury Department Form 941;

   d. “Minority” includes:

      (1) Black (all persons having origins in any of the Black African racial groups not of Hispanic origin);

      (2) Hispanic (all persons of Mexican, Puerto Rican, Cuban, Central American, South American, or other Spanish culture or origin, regardless of race);

      (3) Asian and Pacific Islander (all persons having origins in any of the original peoples of the Far East, Southeast Asia, the Indian Subcontinent, or the Pacific Islands); and

      (4) American Indian or Alaskan Native (all persons having origins in any of the original peoples of North America and maintaining identifiable tribal affiliations through membership and participation or community identification.)

2. Whenever the Contractor, or any subcontractor at any tier, subcontracts a portion of the work involving any construction trade, it shall physically include in each subcontract in excess of $10,000 the provisions of these specifications and the Notice which contains the applicable goals for minority and female participation and which is set forth in the solicitations from which this contract resulted.

3. If the Contractor is participating (pursuant to 41 CFR 60-4.5) in a Hometown Plan approved by the U.S. Department of Labor in the covered area either individually or through an association, its affirmative action obligations on all work in the Plan area (including goals and timetables) shall be in accordance with that Plan for those trades which have unions participating in the Plan. Contractors must be able to demonstrate their participation in and compliance with the provisions of any such Hometown Plan. Each Contractor or subcontractor participating in an approved Plan is individually required to comply with its obligations under the EEO clause, and to make a good faith effort to achieve each goal under the Plan in each trade in which it has employees. The overall good faith performance by other Contractors or subcontractors toward a goal in an approved

Plan does not excuse any covered Contractor's or subcontractor's failure to take good faith efforts to achieve the Plan goals and timetables.

4. The Contractor shall implement the specific affirmative action standards provided in paragraphs 7a through 7p of this Special Provision. The goals set forth in the solicitation from which this contract resulted are expressed as percentages of the total hours of employment and training of minority and female utilization the Contractor should reasonably be able to achieve in each construction trade in which it has employees in the covered area. Covered construction contractors performing construction work in geographical areas where they do not have a Federal or federally assisted construction contract shall apply the minority and female goals established for the geographical area where the work is being performed. The Contractor is expected to make substantially uniform progress in meeting its goals in each craft during the period specified.

5. Neither the provisions of any collective bargaining agreement, nor the failure by a union with whom the Contractor has a collective bargaining agreement, to refer either minorities or women shall excuse the Contractor's obligations under these specifications, Executive Order 11246, or the regulations promulgated pursuant thereto.

6. In order for the nonworking training hours of apprentices and trainees to be counted in meeting the goals, such apprentices and trainees must be employed by the Contractor during the training period, and the Contractor must have made a commitment to employ the apprentices and trainees at the completion of their training, subject to the availability of employment opportunities. Trainees must be trained pursuant to training programs approved by the U.S. Department of Labor.

7. The Contractor shall take specific affirmative actions to ensure equal employment opportunity. The evaluation of the Contractor's compliance with these specifications shall be based upon its effort to achieve maximum results from its actions. The Contractor shall document these efforts fully, and shall implement affirmative action steps at least as extensive as the following:

    a. Ensure and maintain a working environment free of harassment, intimidation, and coercion at all sites, and in all facilities at which the Contractor's employees are assigned to work. The Contractor, where possible, will assign two or more women to each construction project. The Contractor shall specifically ensure that all foremen, superintendents, and other on-site supervisory personnel are aware of and carry out the Contractor's obligation to maintain such a working environment, with specific attention to minority or female individuals working at such sites or in such facilities.

    b. Establish and maintain a current list of minority and female recruitment sources, provide written notification to minority and female recruitment sources and to community organizations when the Contractor or its unions have employment opportunities available, and maintain a record of the organizations' responses.

c. Maintain a current file of the names, addresses and telephone numbers of each minority and female off-the-street applicant and minority or female referral from a union, a recruitment source or community organization and of what action was taken with respect to each such individual. If such individual was sent to the union hiring hall for referral and was not referred back to the Contractor by the union or, if referred, not employed by the Contractor, this shall be documented in the file with the reason therefor, along with whatever additional actions the Contractor may have taken.

d. Provide immediate written notification to the Director when the union or unions with which the Contractor has a collective bargaining agreement has not referred to the Contractor a minority person or woman sent by the Contractor, or when the Contractor has other information that the union referral process has impeded the Contractor's efforts to meet its obligations.

e. Develop on-the-job training opportunity and/or participate in training programs for the area which expressly include minorities and women, including upgrading programs and apprenticeship and trainee programs relevant to the Contractor's employment needs, especially those programs funded or approved by the U.S. Department of Labor. The Contractor shall provide notice of these programs to the sources compiled under 7b above.

f. Disseminate the Contractor's EEO policy by providing notice of the policy to unions and training programs and requesting their cooperation in assisting the Contractor in meeting its EEO obligations; by including it in any policy manual and collective bargaining agreement; by publicizing it in the company newspaper, annual report, etc.; by specific review of the policy with all management personnel and with all minority and female employees at least once a year; and by posting the company EEO policy on bulletin boards accessible to all employees at each location where construction work is performed.

g. Review, at least annually, the company's EEO policy and affirmative action obligations under these specifications with all employees having any responsibility for hiring, assignment, layoff, termination or other employment decisions including specific review of these items with on-site supervisory personnel such as Superintendents, General Foremen, etc., prior to the initiation of construction work at any job site. A written record shall be made and maintained identifying the time and place of these meetings, persons attending, subject matter discussed, and disposition of the subject matter

h. Disseminate the Contractor's EEO policy externally by including it in any advertising in the news media, specifically including minority and female news media, and providing written notification to and discussing the Contractor's EEO policy with other Contractors and Subcontractors with whom the Contractor does or anticipates doing business.

i. Direct its recruitment efforts, both oral and written, to minority, female and community organizations, to schools with minority and female students and to minority and female recruitment and training organizations serving the Contractor's recruitment area and employment needs. Not later than one month prior to the date for the acceptance of applications for apprenticeship or other training by any recruitment source, the Contractor shall send written notification to organizations such as the above, describing the openings, screening procedures, and tests to be used in the selection process.

j. Encourage present minority and female employees to recruit other minority persons and women and where reasonable, provide after school, summer and vacation employment to minority and female youth both on the site and in other areas of a Contractor's work force.

k. Validate all tests and other selection requirements where there is an obligation to do so under 41 CFR Part 60-3.

l. Conduct, at least annually, an inventory and evaluation of all minority and female personnel for promotional opportunities and encourage these employees to seek or to prepare for, through appropriate training, etc., such opportunities.

m. Ensure that seniority practices, job classifications, work assignments and other personnel practices, do not have a discriminatory effect by continually monitoring all personnel and employment related activities to ensure that the EEO policy and the Contractor's obligations under these specifications are being carried out.

n. Ensure that all facilities and company activities are nonsegregated except that separate or single-user toilet and necessary changing facilities shall be provided to assure privacy between the sexes.

o. Document and maintain a record of all solicitations of offers for subcontracts from minority and female construction contractors and suppliers, including circulation of solicitations to minority and female contractor associations and other business associations.

p. Conduct a review, at least annually, of all supervisors' adherence to and performance under the Contractor's EEO policies and affirmative action obligations.

8. Contractors are encouraged to participate in voluntary associations which assist in fulfilling one or more of their affirmative action obligations (7a through 7p). The efforts of a contractor association, joint contractor-union, contractor-community, or other similar group of which the Contractor is a member and participant, may be asserted as fulfilling any one or more of the obligations under 7a through 7p of this Special Provision provided that the Contractor actively participates in the group, makes every effort to assure that the group has a positive impact on the employment of minorities and women in the industry, ensure that the concrete benefits of the program are reflected in the Contractor's minority and

female work-force participation, makes a good faith effort to meet its individual goals and timetables, and can provide access to documentation which demonstrate the effectiveness of actions taken on behalf of the Contractor. The obligation to comply, however, is the Contractor's and failure of such a group to fulfill an obligation shall not be a defense for the Contractor's noncompliance.

9. A single goal for minorities and a separate single goal for women have been established. The Contractor, however, is required to provide equal employment opportunity and to take affirmative action for all minority groups, both male and female, and all women, both minority and non-minority. Consequently, the Contractor may be in violation of the Executive Order if a particular group is employed in substantially disparate manner (for example, even though the Contractor has achieved its goals for women generally, the Contractor may be in violation of the Executive Order if a specific minority group of women is underutilized).

10. The Contractor shall not use the goals and timetables or affirmative action standards to discriminate against any person because of race, color, religion, sex, sexual orientation, gender identity, or national origin.

11. The Contractor shall not enter into any subcontract with any person or firm debarred from Government contracts pursuant to Executive Order 11246.

12. The Contractor shall carry out such sanctions and penalties for violation of these specifications and of the Equal Opportunity Clause, including suspensions, terminations and cancellations of existing subcontracts as may be imposed or ordered pursuant to Executive Order 11246, as amended, and its implementing regulations, by the Office of Federal Contract Compliance Programs. Any Contractor who fails to carry out such sanctions and penalties shall be in violation of these specifications and Executive Order 11246, as amended.

13. The Contractor, in fulfilling its obligations under these specifications, shall implement specific affirmative action steps, at least as extensive as those standards prescribed in paragraph 7 of this Special Provision, so as to achieve maximum results from its efforts to ensure equal employment opportunity. If the Contractor fails to comply with the requirements of the Executive Order, the implementing regulations, or these specifications, the Director shall proceed in accordance with 41 CFR 60-4.8.

14. The Contractor shall designate a responsible official to monitor all employment related activity to ensure that the company EEO policy is being carried out, to submit reports relating to the provisions hereof as may be required by the government and to keep records. Records shall at least include, for each employee, their name, address, telephone numbers, construction trade, union affiliation if any, employee identification number when assigned, social security number, race, sex, status (e.g., mechanic, apprentice, trainee,

helper, or laborer), dates of changes in status, hours worked per week in the indicated trade, rate of pay, and locations at which the work was performed. Records shall be maintained in an easily understandable and retrievable form; however, to the degree that existing records satisfy this requirement, the Contractors will not be required to maintain separate records.

15. Nothing herein provided shall be construed as a limitation upon the application of other laws which establish different standards of compliance or upon the application of requirements for the hiring of local or other area residents (e.g., those under the Public Works Employment Act of 1977 and the Community Development Block Grant Program).

Additional assistance for Federal Construction Contractors on contracts administered by Washington State Department of Transportation or by Local Agencies may be found at:

Washington State Dept. of Transportation
Office of Equity and Civil Rights
PO Box 47314 12 310 Maple Park Ave. SE
Olympia WA 98504-7314
Ph: 360-705-7090
Fax: 360-705-6801
http://www.wsdot.wa.gov/equalopportunity/default.htm

Federal Small Business Enterprise Participation
(November 14, 2025, APWA GSP Option D

1-07.11 is supplemented with the following:

The Federal Small Business Enterprise (FSBE) Program is an element of the Disadvantaged Business Enterprise (DBE) in accordance with the requirements of 49 CFR Part 26.39. Failure to comply with the requirements of this Specification may result in sanctions as provided by the Contract.

FSBE Abbreviations and Definitions

Broker – A business firm that provides a bona fide service, such as professional, technical, consultant or managerial services and assistance in the procurement of essential personnel, facilities, equipment, materials, or supplies required for the performance of the Contract; or persons/companies who arrange or expedite transactions.

Certified Business Description – Specific descriptions of work the FSBE is certified to perform, as identified in the Certified Firm Directory, under the Vendor Information page.

Certified Firm Directory – A database of all Disadvantaged Business Enterprises, including those identified as a FSBE, currently certified by Washington State. The on-line Directory is available to Bidders for their use in identifying and soliciting interest from FSBE firms. The database is located under the Firm Certification section of the

Diversity Management and Compliance System web page at: https://omwbe.diversitycompliance.com.

Firms certified by OMWBE as SBE, DBE can be used to fulfill the FSBE mandatory goal on a project.

Commercially Useful Function (CUF) – 49 CFR 26.55(c)(1) defines commercially useful function as: "A FSBE performs a commercially useful function when it is responsible for execution of the work of the contract and is carrying out its responsibilities by performing, managing, and supervising the work involved. To perform a commercially useful function, the FSBE must also be responsible, with respect to materials and supplies used on the contract, for negotiating price, determining quality and quantity, ordering the material, and installing (where applicable) and paying for the material itself. To determine whether a FSBE is performing a commercially useful function, you must evaluate the amount of work subcontracted, industry practices, whether the amount the firm is to be paid under the contract is commensurate with the work it is performing and the DBE credit claimed for its performance of the work, and other relevant factors."

FSBE – A firm certified by OMWBE as meeting Federal requirements of a small business enterprise. All firms on the OMWBE Certified Firm Directory with the designation of SBE or DBE are FSBEs.

Good Faith Efforts – Efforts to achieve the FSBE Goal or other requirements of this part which, by their scope, intensity, and appropriateness to the objective, can reasonably be expected to fulfill the program requirement.

Manufacturer (FSBE) – A FSBE firm that operates or maintains a factory or establishment that produces on the premises the materials, supplies, articles, or equipment required under the Contract. A FSBE Manufacturer shall produce finished goods or products from raw or unfinished material or purchase and substantially alters goods and materials to make them suitable for construction use before reselling them.

Reasonable Fee (FSBE) – For purposes of Brokers or service providers a reasonable fee shall not exceed 5% of the total cost of the goods or services brokered.

Regular Dealer (FSBE) – A FSBE firm that owns, operates, or maintains a store, warehouse, or other establishment in which the materials or supplies required for the performance of a Contract are bought, kept in stock, and regularly sold to the public in the usual course of business. To be a Regular Dealer, the FSBE firm must be an established regular business that engages in as its principal business and in its own name the purchase and sale of the products in question. A Regular Dealer in such items as steel, cement, gravel, stone, and petroleum products need not own, operate or maintain a place of business if it both owns and operates distribution equipment for the products. Any supplementing of regular dealers' own distribution equipment shall be by long-term formal lease agreements and not on an ad-hoc basis. Brokers, packagers, manufacturers' representatives, or other people who arrange or expedite transactions shall not be regarded as Regular Dealers within the meaning of this definition.

FSBE Goal
The Contracting Agency has established an FSBE Goal for this Contract in the amount of: 17%.

Crediting FSBE Participation
All FSBE subcontractors shall be certified before the subcontract on which they are participating is executed.

FSBE participation is only credited upon payment to the FSBE.

The following are some definitions of what may be counted as FSBE participation.

FSBE Prime Contractor
Only take credit for that portion of the total dollar value of the Contract equal to the distinct, clearly defined portion of the Work that the FSBE Prime Contractor performs with its own forces and is certified to perform.

FSBE Subcontractor
Only take credit for that portion of the total dollar value of the subcontract that is equal to the distinct, clearly defined portion of the Work that the FSBE performs with its own forces and is certified to perform. The value of work performed by the FSBE includes the cost of supplies and materials purchased by the FSBE and equipment leased by the FSBE, for its work on the contract. Supplies, materials or equipment obtained by the FSBE that are not utilized or incorporated in the contract work by the FSBE will not be eligible for FSBE credit.

The supplies, materials, and equipment purchased or leased from the Contractor or its affiliate, including any Contractor's resources available to FSBE subcontractors at no cost, shall not be credited.

FSBE credit will not be given in instances where the equipment lease includes the operator. The FSBE is expected to operate the equipment used in the performance of its work under the contract with its own forces. Situations where equipment is leased and used by the FSBE, but payment is deducted from the Contractor's payment to the FSBE is not allowed.

When the subcontractor is an FSBE, the following apply:

1. If a FSBE subcontracts a portion of the Work of its contract to another firm, the value of the subcontracted Work may be counted toward the FSBE Goal only if the lower-tier subcontractor is also a FSBE.

2. Work subcontracted to a non-FSBE does not count towards the FSBE Goal nor FSBE participation.

FSBE Subcontract and Lower Tier Subcontract Documents
There must be a subcontract agreement that complies with 49 CFR Part 26 and fully describes the distinct elements of Work committed to be performed by the FSBE.

FSBE Service Provider
The value of fees or commissions charged by a FSBE firm behaving in a manner of a Broker, or another service provider for providing a bona fide service, such as professional, technical, consultant, managerial services, or for providing bonds or insurance specifically required for the performance of the contract will only be credited as FSBE participation, if the fee/commission is determined by the Contracting Agency to be reasonable and the firm has performed a CUF.

Temporary Traffic Control
If the FSBE firm is being utilized in the capacity of only "Flagging", the FSBE firm must provide a Traffic Control Supervisor (TCS) and flagger, which are under the direct control of the FSBE. The FSBE firm shall also provide all flagging equipment (e.g. paddles, hard hats, and vests).

If the FSBE firm is being utilized in the capacity of "Traffic Control Services", the FSBE firm must provide a TCS, flaggers, and traffic control items (e.g., cones, barrels, signs, etc.) and be in total control of all items in implementing the traffic control for the project.

Trucking
FSBE trucking firm participation may only be credited as FSBE participation for the value of the hauling services, not for the materials being hauled unless the trucking firm is also certified as a supplier of those materials. In situations where the FSBE's work is priced per ton, the value of the hauling service must be calculated separately from the value of the materials to determine FSBE credit for hauling

The FSBE trucking firm must own and operate at least one licensed, insured and operational truck on the contract. The truck must be of the type that is necessary to perform the hauling duties required under the contract. The FSBE receives credit for the value of the transportation services it provides on the Contract using trucks it owns or leases, licenses, insures, and operates with drivers it employs.

The FSBE may lease additional trucks from another FSBE firm. The FSBE who leases additional trucks from another FSBE firm receives credit for the value of the transportation services the lessee FSBE provides on the Contract.

The trucking Work subcontracted to any non-FSBE trucking firm will not receive credit for Work done on the project.

The FSBE may lease trucks from a truck leasing company (recognized truck rental center) but can only receive credit towards FSBE participation if the FSBE uses its own employees as drivers.

FSBE Manufacturer and FSBE Regular Dealer
One hundred percent (100%) of the cost of the manufactured product obtained from a FSBE manufacturer can count as FSBE participation. If the manufacturer is an FSBE, participation may count towards the FSBE Goal.

Sixty percent (60%) of the cost of materials or supplies purchased from a FSBE Regular Dealer may be credited as FSBE Participation. If the role of the FSBE

Regular Dealer is determined to be that of a Broker, then FSBE credit shall be limited to the fee or commission it receives for its services. Regular Dealer status and the amount of credit is determined on a Contract-by-Contract basis. If the regular dealer is a FSBE, participation may count towards the FSBE Goal.

FSBE firms proposed to be used as a Regular Dealer must be approved before being used on a project. The WSDOT Approved Regular Dealer list published on WSDOT's Office of Equal Opportunity (OEO) web site must include the specific project for which approval is being requested. For purposes of FSBE Goal participation, the Regular Dealer must submit the Regular Dealer Status Request form and receive approval prior to providing any equipment or materials or the signing of a purchase order, invoice, or subcontract.

Purchase of materials or supplies from a FSBE which is neither a manufacturer nor a regular dealer, (i.e. Broker) only the fees or commissions charged for assistance in the procurement of the materials and supplies, or fees or transportation charges for the delivery of materials or supplies required on a job site, can count as FSBE participation provided the fees are not excessive as compared with fees customarily allowed for similar services. Documentation will be required to support the fee/commission charged by the FSBE. The cost of the materials and supplies themselves cannot be counted toward as FSBE participation.

Good Faith Effort Documentation

GFE is evaluated at Physical Completion when determining whether the Contractor has satisfied its FSBE Goal.

The Contracting Agency will measure GFE using the guidance in 49 CFR Part 26, Appendix A. The following is a list of the types of actions which may be considered as part of the Contractor's GFE to achieve FSBE participation. It is not intended to be a mandatory checklist, nor is it intended to be exclusive or exhaustive. Other factors or types of effort may be relevant in appropriate cases.

1. Solicited through all reasonable and available means the interest of all certified FSBEs who had the capability to perform the Work of the Contract. The Contractor must have solicited this interest within sufficient time to allow the FSBEs to respond to the solicitation. The Contractor must have determined with certainty that the FSBEs were interested in taking appropriate steps to follow up initial solicitations with potential FSBEs.

2. Selected portions of the Work to be performed by FSBEs to increase the likelihood that the FSBE Goal will be achieved. This includes, where appropriate, breaking out contract Work items into economically feasible units to facilitate FSBE participation, even when the Contractor might otherwise prefer to perform these Work items with its own forces.

3. Provided interested FSBEs with adequate information about the Plans, Specifications, and requirements of the Contract in a timely manner to assist them in responding to a solicitation.

a. Negotiated in good faith with interested FSBEs. It is the Contractor's responsibility to make a portion of the Work available to FSBE subcontractors and suppliers and to select those portions of the Work or material needs consistent with the available FSBE subcontractors and suppliers, to facilitate FSBE participation. Evidence of such negotiation includes the names, addresses, and telephone numbers of FSBEs that were contacted; a description of the information provided regarding the Plans and Specifications for the Work selected for subcontracting; and evidence as to why additional agreements could not be reached for FSBEs to perform the Work.

b. A Contractor using good business judgment would consider a number of factors in negotiating with FSBE subcontractors, including taking the firm's price and capabilities into consideration. The fact that there may be some additional costs involved in finding and using FSBEs is not considered a sufficient reason for a Bidder's failure to meet the FSBE Goal, if such costs are reasonable. Also, the ability or desire of a Contractor to perform the Work of a Contract with its own organization does not relieve the Contractor of the responsibility to make Good Faith Efforts. Contractors are not, however, required to accept higher quotes from FSBEs if the price difference was excessive or unreasonable.

4. Not rejecting FSBEs as being unqualified without sound reasons based on a thorough investigation of their capabilities. The Contractor's standing within its industry, membership in specific groups, organizations, or associations and political or social affiliations (for example union vs. non-union employee status) are not legitimate causes for the rejection or non-solicitation of bids in the Contractor's efforts to meet the FSBE Goal.

5. Made efforts to assist interested FSBEs in obtaining bonding, lines of credit, or insurance as required by the recipient or Contractor.

6. Made efforts to assist interested FSBEs in obtaining necessary equipment, supplies, materials, or related assistance or services.

7. Effectively used the services of available FSBE community organizations; FSBE contractors' groups; local, State, and Federal small business assistance offices; and other organizations as allowed on a case-by-case basis to provide assistance in the recruitment and placement of FSBEs.

8. Documentation of GFE must include copies of each FSBE and non-FSBE subcontractor quotes submitted to the Bidder when a non-FSBE subcontractor is selected over a FSBE for Work on the Contract.

Procedures after Execution

Commercially Useful Function (CUF)

The Contractor may only take credit for the payments made for Work performed by a FSBE that is determined to be performing a CUF. Payment must be commensurate with the work performed by the FSBE. This applies to all FSBEs performing Work on a project, if the Contractor wants to receive credit for their participation. The Engineer

will conduct CUF reviews to ascertain whether FSBEs are performing a CUF. A FSBE performs a CUF when it is carrying out its responsibilities of its contract by performing, managing, and supervising the Work involved. The FSBE must be responsible for negotiating price; determining quality and quantity; ordering the material, installing (where applicable); and paying for the material itself. If a FSBE does not perform "all" of these functions on a furnish-and-install contract, it has not performed a CUF, and the cost of materials cannot be counted toward FSBE Goal. Leasing equipment from a leasing company is allowed. However, leasing/purchasing equipment from the Contractor is not allowed. Lease agreements shall be provided prior to the Subcontractor beginning Work. Any use of the Contractor's equipment by a FSBE may not be credited as countable participation.

The FSBE does not perform a CUF if its role is limited to that of an extra participant in a transaction, contract, or project through which the funds are passed to obtain the appearance of FSBE participation.

For a FSBE traffic control company to be performing a CUF, the FSBE must be in control of its work inclusive of supervision. The FSBE shall employ a Traffic Control Supervisor who is directly involved in the management and supervision of the traffic control employees and services.

The following are some of the factors that the Engineer will use in determining whether an FSBE trucking company is performing a CUF:

- The FSBE shall be responsible for the management and supervision of the entire trucking operation for which it is responsible for on the contract. The owner demonstrates business related knowledge, shows up on site and is determined to be actively running the business.

- The FSBE shall own and operate at least one fully licensed, insured, and operational truck used on the Contract. The drivers of the trucks owned and leased by the FSBE must be exclusively employed by the FSBE and reflected on the FSBE's payroll.

- Lease agreements for trucks shall indicate that the FSBE has exclusive use of and control over the truck(s). This does not preclude the leased truck from working for others provided it is with the consent of the FSBE, and the lease provides the FSBE absolute priority for use of the leased truck.

- Leased trucks shall display the name and identification number of the FSBE.

Truck Unit Listing Log

In addition to the subcontracting requirements of Section 1-08.1, each FSBE trucking firm shall submit supplemental information consisting of a completed Primary DBE/FSBE Truck Unit Listing Log (WSDOT Form 350-077) and all Rental/Lease agreements (if applicable). The supplemental information shall be submitted in an electronic format to the Engineer prior to any trucking services being performed for FSBE credit. Incomplete or incorrect supplemental information will be returned for correction. The corrected Primary Truck Unit Listing Log and any Updated Primary

Truck Unit Listing Logs shall be submitted and accepted by the Engineer no later than ten calendar days of utilizing applicable trucks. Failure to submit or update the DBE Truck Unit Listing Log may result in trucks not being credited as FSBE participation.

Each FSBE trucking firm shall complete a Daily Truck Unit Listing Log for each day that the FSBE performs trucking services for FSBE credit. The Daily Truck Unit Listing Log forms shall be submitted by Friday of the week after the Work was performed by email to the following email addresses:

Donnelle Dayao (Parks Project Manager): ddayao@mltwa.gov

and

NWROECR: nwregionoeo@wsdot.wa.gov

Joint Checking

A joint check is a check between a subcontractor and the Contractor to the supplier of materials/supplies. The check is issued by the Contractor as payer to the subcontractor and the material supplier jointly for items to be incorporated into the project. The FSBE must release the check to the supplier, while the Contractor acts solely as the guarantor.

A joint check agreement must be approved by the Engineer and requested by the FSBE involved using the DBE Joint Check Request Form (WSDOT Form #272-053) prior to its use. The form must accompany the FSBE Joint Check Agreement between the parties involved, including the conditions of the arrangement and expected use of the joint checks.

The approval to use joint checks and the use will be closely monitored by the Engineer. To receive FSBE credit for performing a CUF with respect to obtaining materials and supplies, a FSBE must "be responsible for negotiating price, determining quality and quantity, ordering the material, installing and paying for the material itself." The Contractor shall submit DBE Joint Check Request Form for the Engineer approval prior to using a joint check.

Material costs paid by the Contractor directly to the material supplier are not allowed. If proper procedures are not followed or the Engineer determines that the arrangement results in lack of independence for the FSBE involved, no FSBE credit will be given for the FSBE's participation as it relates to the material cost.

Prompt Payment

Prompt payment to all subcontractors shall be in accordance with Section 1-08.1. Prompt payment requirements apply to progress payments as well as return of retainage.

Subcontracts

When FSBE is performing Work on the Contract, a copy of the executed subcontract between the Contractor and the FSBE subcontractor shall be submitted to WSDOT

OECR. The executed subcontracts are submitted through the Diversity Management and Compliance System (DMCS) by uploading to the project documents tab.

Reporting
The Contractor and all subcontractors/suppliers/service providers that utilize FSBEs to perform work on the project, shall maintain appropriate records that will enable the Engineer to verify FSBE participation throughout the life of the project.

Refer to Section 1-08.1 for additional reporting requirements associated with this contract.

Decertification
When a FSBE is "decertified" from the FSBE program during the Contract, the participation of that FSBE shall continue to count as FSBE participation if the subcontract with the FSBE was executed prior to the decertification notice. The Contractor cannot receive credit if a FSBE is decertified prior to having an executed subcontract agreement in place.

Payment
Compensation for all costs involved with complying with the conditions of this Specification and any other associated FSBE requirements is included in payment for the associated Contract items of Work, except otherwise provided in the Specifications.

1-07.11(1)C Nondiscrimination Authorities
(March 9, 2026 WSDOT GSP Option 1)

Section 1-07.11(1)C is revised to read

During the performance of this Contract, the Contractor, for itself, its assignees, and successors in interest agrees to comply with the following nondiscrimination statues and authorities; including but not limited to:

1. Title VI of the Civil Rights Act of 1964 (42 U.S.C. § 2000d et seq., 78 stat. 252), and its implementing regulations and case law, prohibit discrimination on the basis of race, color, or national origin. 49 C.F.R. 21.5(b)(2) prohibits a recipient of federal funds from utilizing "criteria or methods of administration which have the effect of subjecting persons to discrimination because of their race, color, or national origin, or have the effect of defeating or substantially impairing accomplishment of the objectives of the program with respect to individuals of a particular race, color, or national origin." This includes taking reasonable steps to provide limited English proficiency (LEP) persons meaningful access to all programs, activities and services, where necessary to avoid discrimination on the basis of national origin.

2. The Uniform Relocation Assistance and Real Property Acquisition Policies Act of 1970, (42 U.S.C §4601), (prohibits unfair treatment of persons displaced or whose property has been acquired because of Federal or Federal-aid programs and projects).

3. Federal-Aid Highway Act of 1973, (23 U.S.C. § 324 et. seq.), as amended, (prohibits discrimination on the basis of sex).

4. Section 504 of the Rehabilitation Act of 1973, (29 U.S.C. § 794 et 29 seq.), as amended (prohibits discrimination on the basis of disability); and 49 C.F.R. Part 27.

5. The Age Discrimination Act of 1975, as amended (42 U.S.C. § 6101 et seq.), (prohibits discrimination on the basis of age).

6. Airport and Airway Improvement Act of 1982, (49 U.S.C. § 471, Section 47123), as amended, (prohibits discrimination based on race, creed, color, national origin, or sex).

7. The Civil Rights Restoration Act of 1987, (PL 100-209), (Broadened the scope, coverage and applicability of Title VI of the Civil Rights Act of 1964, The Age of Discrimination Act of 1975 and Section 504 of the Rehabilitation Act of 1973, by expanding the definition and terms "programs or activities" to include all of the programs or activities of the Federal-aid recipients, sub-recipients and contractors, whether such programs or activities are Federally funded or not).

8. Titles II and III of the Americans with Disabilities Act, which prohibit discrimination on the basis of disability in the operation of public entities, public and private transportation systems, places of public accommodation, and certain testing entities (42 U.S.C. § 12131- 12189) as implemented by Department of Transportation regulations at 49 C.F.R. parts 37 and 38.

9. The Federal Aviation Administration's Nondiscrimination statute (49 U.S.C. § 47123), (prohibits discrimination on the basis of race, color national origin, and sex).

10. Title IX of the Education Amendments of 1972, as amended, which prohibits you from discriminating because of sex in education programs or activities (20 U.S.C. 1681 et seq.).

1-07.11(2) Contractual Requirements
(November 25, 2024 APWA GSP)

Delete item 11 of the first paragraph of Section 1-07.11(2).

1-07.12 Federal Agency Inspection

(October 3, 2023, WSDOT GSP, Option 1)

Section 1-07.12 is supplemented with the following:

The Required Contract Provisions Federal Aid Construction Contracts (FHWA 1273) Revised October 23, 2023 and the amendments thereto supersede any conflicting provisions of the Standard Specifications and are made a part of this Contract; provided, however, that if any of

the provisions of FHWA 1273, as amended, are less restrictive than Washington State Law, then the Washington State Law shall prevail.

The provisions of FHWA 1273, as amended, included in this Contract require that the Contractor insert the FHWA 1273 and amendments thereto in each subcontract, together with the wage rates which are part of the FHWA 1273, as amended. Also, a clause shall be included in each subcontract requiring the subcontractors to insert the FHWA 1273 and amendments thereto in any lower tier subcontracts, together with the wage rates. The Contractor shall also ensure that this section, REQUIRED FEDERAL AID PROVISIONS, is inserted in each subcontract for subcontractors and lower tier subcontractors. For this purpose, upon request to the Engineer, the Contractor will be provided with extra copies of the FHWA.

1-07.17 Utilities and Similar Facilities

(April 2, 2007 WSDOT GSP)

Section 1-07.17 is supplemented with the following:

Locations and dimensions shown in the Plans for existing facilities are in accordance with available information obtained without uncovering, measuring, or other verification.

The following addresses and telephone numbers of utility companies known or suspected of having facilities within the project limits are supplied for the Contractor's convenience:

City of Mountlake Terrace - City Hall
23204 58th Avenue West
Mountlake Terrace, WA 98043
Phone: (425) 775-1161

City of Mountlake Terrace - Public Works
6204 215th St, SW
Mountlake Terrace, WA 98043
(425) 670-8264

Snohomish County PUD District 1 (Electric)
Erin Burke
P.O. Box 1107
Everett, WA 98206
(425) 783-4745
Email: EFBurke@SNOPUD.com

Comcast Broadband
Mike Fontenot
1525 75 St. SW, #200
Everett, WA 98023
Phone: (425) 218-9719

Puget Sound Energy
Aaron Hines, Engineer II
(253) 307-0767
Email: aaron.hines@pse.com
Eric Liaw, Project Manager
(425) 495-3297
Email: Eric.Liaw@pse.com
www.pse.com/construction-services/
19900 N Creek Parkway, BOT-01H
Bothell, WA 98011

Ziply
Mike Hakahan, OSP Engineer
Phone: (425) 949-0230
mike.hakahan@ziply.com

Snocom
Phone: (425) 774-3583

Underground Utilities Location Center
Call Before You Dig
1-800-424-5555 / 811

Community Transit
Shawn Nakano, CT Operations Supervisor
7100 Hardeson Road
Everett, WA 98203
Phone: 425-348-7191
Construction.supervisor@commtrans.org

AT&T
Steve Duppenhaler
Cell: 425-286-3822
Email: s1891@att.com

1-07.18 Public Liability and Property Damage Insurance

Delete this section in its entirety, and replace it with the following:

1-07.18 Insurance
(February 17, 2026 APWA GSP)

1-07.18(1) General Requirements

A. The Contractor shall procure and maintain the insurance described in all subsections of section 1-07.18 of these Special Provisions, from insurers with a current A. M. Best rating of not less than A-: VII and licensed to do business in the State of Washington. The Contracting Agency reserves the right to approve or reject the insurance provided, based on the insurer's financial condition.

B. The Contractor shall keep this insurance in force without interruption from the commencement of the Contractor's Work through the term of the Contract and for thirty (30) days after the Physical Completion date, unless otherwise indicated below.

C. If any insurance policy is written on a claims-made form, its retroactive date, and that of all subsequent renewals, shall be no later than the effective date of this Contract. The policy shall state that coverage is claims made and state the retroactive date. Claims-made form coverage shall be maintained by the Contractor for a minimum of 36 months following the Completion Date or earlier termination of this Contract, and the Contractor shall annually provide the Contracting Agency with proof of renewal. If renewal of the claims made form of coverage becomes unavailable, or economically prohibitive, the Contractor shall purchase an extended reporting period ("tail") or execute another form of guarantee acceptable to the Contracting Agency to assure financial responsibility for liability for services performed.

D. The Contractor's Automobile Liability, Commercial General Liability and Excess or Umbrella Liability insurance policies shall be primary and non-contributory insurance as respects the Contracting Agency's insurance, self-insurance, or self-insured pool coverage. Any insurance, self-insurance, or self-insured pool coverage maintained by the Contracting Agency shall be excess of the Contractor's insurance and shall not contribute with it.

E. The Contractor shall provide the Contracting Agency and all additional insureds with written notice of any policy cancellation, within two business days of their receipt of such notice.

F. The Contractor shall not begin Work under the Contract until the required insurance has been obtained and approved by the Contracting Agency.

G. Failure on the part of the Contractor to maintain the insurance as required shall constitute a material breach of contract, upon which the Contracting Agency may, after giving five business days' notice to the Contractor to correct the breach, immediately terminate the Contract or, at its discretion, procure or renew such insurance and pay any and all premiums in connection therewith, with any sums so expended to be repaid to the Contracting Agency on demand, or at the sole discretion of the Contracting Agency, offset against funds due the Contractor from the Contracting Agency.

H. All costs for insurance shall be incidental to and included in the unit or lump sum prices of the Contract and no additional payment will be made.

I. Under no circumstances shall a wrap up policy be obtained, for either initiating or maintaining coverage, to satisfy insurance requirements for any policy required under this Section. A **"**wrap up policy**"** is defined as an insurance agreement or arrangement under which all the parties working on a specified or designated project are insured under one policy for liability arising out of that specified or designated project**.**

1-07.18(2) Additional Insured

All insurance policies, with the exception of Workers Compensation, and of Professional Liability and Builder's Risk (if required by this Contract) shall name the following listed entities as additional insured(s) using the forms or endorsements required herein:

- the Contracting Agency and its officers, elected officials, employees, agents, and volunteers

The above-listed entities shall be additional insured(s) for the full available limits of liability maintained by the Contractor, irrespective of whether such limits maintained by the Contractor are greater than those required by this Contract, and irrespective of whether the Certificate of Insurance provided by the Contractor pursuant to 1-07.18(4) describes limits lower than those maintained by the Contractor.

For Commercial General Liability insurance coverage, the required additional insured endorsements shall be at least as broad as ISO forms CG 20 10 10 01 for ongoing operations and CG 20 37 10 01 for completed operations.

1-07.18(3) Subcontractors

The Contractor shall cause each subcontractor of every tier to provide insurance coverage that complies with all applicable requirements of the Contractor-provided insurance as set forth herein, except the Contractor shall have sole responsibility for determining the limits of coverage required to be obtained by subcontractors.

The Contractor shall ensure that all subcontractors of every tier add all entities listed in 1-07.18(2) as additional insureds, and provide proof of such on the policies as required by that section as detailed in 1-07.18(2) using an endorsement as least as broad as ISO CG 20 10 10 01 for ongoing operations and CG 20 37 10 01 for completed operations.

Upon request by the Contracting Agency, the Contractor shall forward to the Contracting Agency evidence of insurance and copies of the additional insured endorsements of each subcontractor of every tier as required in 1-07.18(4) Verification of Coverage.

1-07.18(4) Verification of Coverage

The Contractor shall deliver to the Contracting Agency a Certificate(s) of Insurance and endorsements for each policy of insurance meeting the requirements set forth herein when the Contractor delivers the signed Contract for the Work. Failure of Contracting Agency to demand such verification of coverage with these insurance requirements or failure of Contracting Agency to identify a deficiency from the insurance documentation provided shall not be construed as a waiver of Contractor's obligation to maintain such insurance.

Verification of coverage shall include:

1. An ACORD certificate or a form determined by the Contracting Agency to be equivalent.

2. Copies of all endorsements naming Contracting Agency and all other entities listed in 1-07.18(2) as additional insured(s), showing the policy number. The Contractor may submit a copy of any blanket additional insured clause from its policies instead of a separate endorsement.

3. Any other amendatory endorsements to show the coverage required herein.

4. A notation of coverage enhancements on the Certificate of Insurance shall <u>not</u> satisfy these requirements – actual endorsements must be submitted.

5. All insurance coverage maintained or procured pursuant to this agreement shall be endorsed to waive subrogation against the Contracting Agency, its elected or appointed officers, agents, officials, employees, and volunteers or shall specifically allow the Contractor or others providing insurance evidence in compliance with these Specifications to waive their right of subrogation prior to a loss. The Contractor hereby waives its own right of subrogation against the Contracting Agency and shall require similar written express waivers and insurance clauses from each of its subcontractors.

Upon request by the Contracting Agency, the Contractor shall forward to the Contracting Agency a full and certified copy of the insurance policy(s). If Builders Risk insurance is required on this Project, a full and certified copy of that policy is required when the Contractor delivers the signed Contract for the Work.

1-07.18(5) Coverages and Limits

The insurance shall provide the minimum coverages and limits set forth below. Contractor's maintenance of insurance, its scope of coverage, and limits as required herein shall not be construed to limit the liability of the Contractor to the coverage provided by such insurance, or otherwise limit the Contracting Agency's recourse to any remedy available at law or in equity.

All deductibles and self-insured retentions must be disclosed and are subject to approval by the Contracting Agency. The cost of any claim payments falling within the deductible or self-insured retention shall be the responsibility of the Contractor. In the event an additional insured incurs a liability subject to any policy's deductibles or self-insured retention, said deductibles or self-insured retention shall be the responsibility of the Contractor.

1-07.18(5)A Commercial General Liability

Commercial General Liability insurance shall be written on coverage forms at least as broad as ISO occurrence form CG 00 01, including but not limited to liability arising from premises, operations, stop gap liability, independent contractors, products-completed operations, personal and advertising injury, and liability assumed under an insured contract. There shall be no exclusion for liability arising from explosion, collapse or underground property damage.

The Commercial General Liability insurance shall be endorsed to provide a per project general aggregate limit, using ISO form CG 25 03 05 09 or an equivalent endorsement.

Contractor shall maintain Commercial General Liability Insurance arising out of the Contractor's completed operations for at least three years following Substantial Completion of the Work.

Such policy must provide the following minimum limits:

$2,000,000	Each Occurrence
$3,000,000	General Aggregate
$3,000,000	Products & Completed Operations Aggregate
$2,000,000	Personal & Advertising Injury each offence
$2,000,000	Stop Gap / Employers' Liability each accident

1-07.18(5)B Automobile Liability

Automobile Liability shall cover owned, non-owned, hired, and leased vehicles; and shall be written on a coverage form at least as broad as ISO form CA 00 01. If the Work involves the transport of pollutants, the automobile liability policy shall include MCS 90 and CA 99 48 endorsements.

Such policy must provide the following minimum limit:

$1,000,000	Combined single limit each accident

1-07.18(5)C Workers' Compensation

The Contractor shall comply with Workers' Compensation coverage as required by the Industrial Insurance laws of the State of Washington.

1-07.24 Rights of Way

(April 22, 2025 APWA GSP)

Delete this section and replace it with the following:

Street Right of Way lines, limits of easements, and limits of construction permits are indicated in the Plans. The Contractor's construction activities shall be confined within these limits unless arrangements for use of private property are made as described below.

Generally, the Contracting Agency will have obtained, prior to bid opening, all rights of way and easements, both permanent and temporary, necessary for carrying out the work. Exceptions to this are noted in the Bid Documents or will be brought to the Contractor's attention by a duly issued Addendum.

Whenever any of the work is accomplished on or through property other than public Right of Way, the Contractor shall meet and fulfill all covenants and stipulations of any easement agreement obtained by the Contracting Agency from the owner of the private property. Copies of the easement agreements may be included in the Contract Provisions or made available to the Contractor as soon as practical after they have been obtained by the Engineer.

Whenever easements or rights of entry have not been acquired prior to advertising, these areas are so noted in the Plans. The Contractor shall not proceed with any portion of the work in areas where right of way, easements or rights of entry have not been acquired until the Engineer certifies to the Contractor that the right of way or easement is available or that the right of entry has been received. If the Contractor is delayed due to acts of omission on the part of the Contracting Agency in obtaining easements, rights of entry or right of way, the Contractor will be entitled to an extension of time. The Contractor agrees that such delay shall not be a breach of contract.

Each property owner shall be given 48 hours' notice prior to entry by the Contractor. This includes entry onto easements and private property where private improvements must be adjusted.

The Contractor shall be responsible for providing, without expense or liability to the Contracting Agency, any additional land and access thereto that the Contractor may desire for temporary construction facilities, storage of materials, or other Contractor needs. However, before using any private property, whether adjoining the work or not, the Contractor shall file with the Engineer a written permission of the private property owner, and, upon vacating the premises, a written release from the property owner of each property disturbed or otherwise interfered with by reasons of construction pursued under this contract. The statement shall be signed by the private property owner, or proper authority acting for the owner of the private property affected, stating that permission has been granted to use the property and all necessary permits have been obtained or, in the case of a release, that the restoration of the property has been satisfactorily accomplished. The statement shall include the parcel number, address, and date of signature. Written releases must be filed with the Engineer before the Completion Date will be established.

1-08 PROSECUTION AND PROGRESS

Add the following new section:

1-08.0 Preliminary Matters
(May 25, 2006 APWA GSP)

Add the following new section:

1-08.0(1) Preconstruction Conference
(October 21, 2025 APWA GSP)

Prior to the Contractor beginning the work, a preconstruction conference will be held between the Contractor, the Engineer and such other interested parties as may be invited. The purpose of the preconstruction conference will be:

1. To review the initial progress schedule;
2. To establish a working understanding among the various parties associated or affected by the work;
3. To establish and review procedures for progress payment, notifications, approvals, submittals, etc.;
4. To review Training or Apprenticeship Plans, when applicable.
5. To discuss FSBE Goals when applicable.
5. To establish normal working hours for the work;
6. To review safety standards and traffic control; and
7. To discuss such other related items as may be pertinent to the work.

The Contractor shall prepare and submit at the preconstruction conference the following:

1. A breakdown of all lump sum items;
2. A preliminary schedule of working drawing submittals; and
3. A list of material sources for approval if applicable.

Add the following new section:

1-08.0(2) Hours of Work

(February 17, 2026 APWA GSP)

Except in the case of emergency or unless otherwise approved by the Engineer, the normal working hours for the Contract shall be any consecutive 8-hour period between 7:00 a.m. and 6:00 p.m. Monday through Friday, exclusive of a lunch break. If the Contractor desires different than the normal working hours stated above, the request must be submitted in writing prior to the preconstruction conference, subject to the provisions below. The working hours for the Contract shall be established at or prior to the preconstruction conference.

All working hours and days are also subject to local permit and ordinance conditions (such as noise ordinances).

If the Contractor wishes to deviate from the established working hours, the Contractor shall submit a written request to the Engineer for consideration. This request shall state what hours are being requested, and why. Requests shall be submitted for review no later than 72 hours prior to the day(s) the Contractor is requesting to change the hours.

If the Contracting Agency approves such a deviation, such approval may be subject to certain other conditions, which will be detailed in writing. For example:

1. On non-Federal aid projects, requiring the Contractor to reimburse the Contracting Agency for the costs in excess of straight-time costs for Contracting Agency representatives who worked during such times. (The Engineer may require designated representatives to be present during the Work. Representatives who may be deemed necessary by the Engineer include, but are not limited to: survey crews; personnel from the Contracting Agency's material testing lab; inspectors; and other Contracting Agency employees or third party consultants when, in the opinion of the Engineer, such Work necessitates their presence.)
2. Considering the Work performed on Saturdays, Sundays, and holidays as working days with regard to the contract time.
3. Considering multiple work shifts as multiple working days with respect to contract time even though the multiple shifts occur in a single 24-hour period.
4. If a 4-10 work schedule is requested and approved the non-working day for the week will be charged as a working day.

If Davis Bacon wage rates apply to this Contract, all requirements must be met and recorded properly on certified payroll.

1-08.1 Subcontracting
(December 30, 2022 APWA GSP, Option A)

Section 1-08.1 is supplemented with the following:

Prior to any subcontractor or lower tier subcontractor beginning work, the Contractor shall submit to the Engineer a certification (WSDOT Form 420-004) that a written agreement between the Contractor and the subcontractor or between the subcontractor and any lower tier subcontractor has been executed. This certification shall also guarantee that these subcontract agreements include all the documents required by the Special Provision Federal Agency Inspection.

A subcontractor or lower tier subcontractor will not be permitted to perform any work under the contract until the following documents have been completed and submitted to the Engineer:

1. Request to Sublet Work (WSDOT Form 421-012), and

2. Contractor and Subcontractor or Lower Tier Subcontractor Certification for Federal-aid Projects (WSDOT Form 420-004).

The Contractor shall submit to the Engineer a completed Monthly Retainage Report (WSDOT Form 272-065) within 15 calendar days after receipt of every monthly progress payment until every subcontractor and lower tier subcontractor's retainage has been released.

The Contractor's records pertaining to the requirements of this Special Provision shall be open to inspection or audit by representatives of the Contracting Agency during the life of the contract and for a period of not less than three years after the date of acceptance of the contract. The Contractor shall retain these records for that period. The Contractor shall also guarantee that these records of all subcontractors and lower tier subcontractors shall be available and open to similar inspection or audit for the same time period.

1-08.1(1) General ***(NEW SECTION)***

(February 17, 2026 APWA GSP)

Delete the first paragraph, and replace it with the following:

For purposes of this Section, all Work that is not self-performed by the Contractor will be considered as subcontracting except the following, hereinafter referred to as materials supplying: (1) when purchased directly by the Contractor - sand, gravel, crushed stone, crushed slag, batched concrete aggregates, ready-mix concrete, off-site fabricated structural steel, other off-site fabricated items, and any other materials supplied by established and recognized commercial plants; or (2) delivery of these materials to the Work site in vehicles owned or operated by such plants or by recognized independent or commercial hauling companies hired by those commercial plants; or (3) the presence of a uniformed law enforcement officer and marked law enforcement vehicle.

1-08.1(7) Payments to Subcontractors and Lower-Tier Subcontractors

1-08.1(7)A Payment Reporting

(March 9, 2026 WSDOT GSP, Option 1)

Section 1-08.1(7)A is revised to read:

The Contractor shall report the actual amounts paid to all firms that were used as subcontractors of any tier, materials suppliers, manufacturers, regular dealers, or service providers on the Contract including all Disadvantaged, Minority, Small, Veteran, or Women's Business Enterprise firms. The following do not need reported: (1) retail sales or services that are paid for at the time of purchase; (2) payments to materials suppliers or manufacturers that are in normal course of business unless it is to a Disadvantaged, Minority, Small, Veteran, or Women's Business Enterprise firm in accordance with Section 1- 07.11. The Contractor shall

report this information by entering it into the Contracting Agency's Diversity Management and Compliance System at: https://wsdot.diversitycompliance.com. Payments shall be reported no later than the 20th of the month for all payments made to firms the previous calendar month. For example, the Contractor shall enter all payments made to firms during the month of March into DMCS by April 20th. Payments shall be reported between execution of the Contract and the Contract Completion Date. When no Work occurred or no payments were made for a firm, the reported payment shall be zero.

The Contractor shall require all recipients of such payments to use DMCS to acknowledge their receipt of payment.

1-08.1(8)B Clauses Required in Subcontracts of All Tiers
(November 25, 2024 APWA GSP)

Delete item 8 of the second paragraph of Section 1-08.1(8)B.

1-08.1(9) Submittal of Executed Subcontracts

(April 22, 2025 APWA GSP, Option B)

Section 1-08.1(9) content and title are deleted and replaced with the following:

Vacant

1-08.3(2)A Type A Progress Schedule
(February 17, 2026 APWA GSP)

Revise this section to read:

The Contractor shall submit 1 copies of a Type A Progress Schedule no later than at the preconstruction conference, or some other mutually agreed upon submittal time. The schedule may be a critical path method (CPM) schedule, bar chart, or other standard schedule format. Regardless of which format is used, the schedule shall identify the critical path. The Engineer will evaluate the Type A Progress Schedule and accept or return the schedule for corrections within 15 calendar days of receiving the submittal.

1-08.4 Prosecution of Work

Delete this section and replace it with the following:

1-08.4 Notice to Proceed and Prosecution of Work
(July 23, 2025 MLT GSP)

Notice to Proceed will be given after the contract has been executed and the contract bond and evidence of insurance have been approved and filed by the Contracting Agency. The Contractor shall not commence with the work until the Notice to Proceed has been given by the Engineer. Construction activities on the site, shall not begin until the building permit or the Structural Earthen Wall has been obtained. The Contractor shall have up to 90 calendar days (after the Notice to Proceed date) to apply for and obtain a building permit for the Structural Earthen Wall. It is anticipated construction activities will commence on the project site within 90 calendar days after the Notice to Proceed date, unless otherwise approved in writing. The Contractor shall diligently pursue the work to the physical completion date within the time specified in the contract. Voluntary shutdown or slowing of operations by the Contractor shall not relieve the Contractor of the responsibility to complete the work within the time(s) specified in the contract.

When shown in the Plans, the first order of work shall be the installation of high visibility silt fencing to delineate all areas for protection or restoration, as described in the Contract. Installation of high visibility fencing adjacent to the roadway shall occur after the placement of all necessary signs and traffic control devices in accordance with 1-10.1(2). Upon construction of the fencing, the Contractor shall request the Engineer to inspect the fence. No other work shall be performed on the site until the Contracting Agency has accepted the installation of high visibility silt fencing, as described in the Contract.

1-08.5 Time for Completion
(March 13, 1995 WSDOT GSP, Option 7)

This project shall be physically completed within 85 working days.

1-08.5 Time for Completion
(March 20, 2026 MLT GSP)

Revise the third and fourth paragraphs to read:

Contract time shall begin 10 calendar days after the building permit for the Structural Earthen Wall is issued, or 90 calendar days after the Notice to Proceed date, whichever comes first.

Each working day shall be charged to the Contract as it occurs, until the Contract Work is physically complete. If substantial completion has been granted and all the authorized working days have been used, charging of working days will cease. Each week the Engineer will provide the Contractor a statement that shows the number of working days: (1) charged to the Contract the week before; (2) specified for the physical completion of the Contract; and (3) remaining for the physical completion of the Contract. The statement will also show the nonworking days and all partial or whole days the Engineer declares as unworkable. The statement will be identified as a Written Determination by the Engineer. If the Contractor does not agree with the Written Determination of working

days, the Contractor shall pursue the protest procedures in accordance with Section 1-04.5. By failing to follow the procedures of Section 1-04.5, the Contractor shall be deemed as having accepted the statement as correct. If the Contractor is approved to work 10 hours a day and 4 days a week (a 4-10 schedule) and the fifth day of the week in which a 4-10 shift is worked would ordinarily be charged as a working day, then the fifth day of that week will be charged as a working day whether or not the Contractor works on that day.

Revise the sixth paragraph to read:

The Engineer will give the Contractor written notice of the Completion Date of the Contract after all the Contractor's obligations under the Contract have been performed by the Contractor. The following events must occur before the Completion Date can be established:

1. The physical Work on the project must be complete; and
2. The Contractor must furnish all documentation required by the contract and required by law, to allow the Contracting Agency to process final acceptance of the contract. The following documents must be received by the Engineer prior to establishing a completion date:
   a. Certified Payrolls (per Section 1-07.9(5)).
   b. Material Acceptance Certification Documents
   c. Monthly Reports in DMCS of the amounts paid including the final payment confirmation to all firms required by Section 1-08.1(7)A if applicable
   d. Final Contract Voucher Certification
   e. Copies of the approved "Affidavit of Prevailing Wages Paid" for the Contractor and all subcontractors
   f. A copy of the Notice of Termination sent to the Washington State Department of Ecology (Ecology); the elapse of 30 calendar days from the date of receipt of the Notice of Termination by Ecology; and no rejection of the Notice of Termination by Ecology. This requirement will not apply if the Construction Stormwater General Permit is transferred back to the Contracting Agency in accordance with Section 8-01.3(16).
   g. Property owner releases per Section 1-07.24

1-08.6 Suspension of Work

(February 6, 2023 WSDOT GSP, Option 2)

Section 1-08.6 is supplemented with the following:

Contract time may be suspended for procurement of critical materials (Procurement Suspension). In order to receive a Procurement Suspension, the Contractor shall within 21 calendar days after execution by the Contracting Agency, place purchase orders for all materials deemed critical by the Contracting Agency for physical completion of the contract. The Contractor shall provide copies of purchase orders for the critical materials. Such purchase orders shall disclose the purchase order date and estimated delivery dates for such critical material.

The Contractor shall show procurement of the materials listed below as activities in the Progress Schedule. If the approved Progress Schedule indicates that the materials procurement are critical activities, and if the Contractor has provided documentation that purchase orders are placed for the critical materials within the prescribed 21 calendar days, then contract time will be suspended upon physical completion of all critical work except that work dependent upon the below listed critical materials:

- Railing Type 1
- Railing Type 2
- Railing Type 3
- Railing Type 4
- Illumination System Components
- Precast concrete Twig Benches

Charging of contract time will resume upon delivery of the critical materials to the Contractor or 120 calendar days after suspension issuance by the Contracting Agency, whichever occurs first.

1-08.9 Liquidated Damages
(February 17, 2026 APWA GSP, Option A)

Replace Section 1-08.9 with the following:

Time is of the essence of the Contract. Delays inconvenience the traveling public, obstruct traffic, interfere with and delay commerce, and increase risk to Highway users. Delays also cost tax payers undue sums of money, adding time needed for administration, engineering, inspection, and supervision.

Accordingly, the Contractor agrees:

1. To pay liquidated damages in the amount of $3,300.00 for each working day beyond the number of working days established for Physical Completion, and

2. To authorize the Engineer to deduct these liquidated damages from any money due or coming due to the Contractor.

When the Contract Work has progressed to Substantial Completion as defined in the Contract, the Engineer may determine the Contract Work is Substantially Complete. The Engineer will notify the Contractor in writing of the Substantial Completion Date. For overruns in Contract time occurring after the date so established, liquidated damages identified above will not apply. For overruns in Contract time occurring after the Substantial Completion Date, liquidated damages shall be assessed on the basis of direct engineering and related costs assignable to the project until the actual Physical Completion Date of all the Contract Work. The Contractor shall complete the remaining

Work as promptly as possible. Upon request by the Engineer, the Contractor shall furnish a written schedule for completing the physical Work on the Contract.

Liquidated damages will not be assessed for any days for which an extension of time is granted. No deduction or payment of liquidated damages will, in any degree, release the Contractor from further obligations and liabilities to complete the entire Contract.

1-09 MEASUREMENT AND PAYMENT

1-09.2(1) General Requirements for Weighing Equipment

(July 8, 2024.Option C)

Revise the sixth and seventh paragraph to read:

Trucks and Tickets – Each truck to be weighed shall bear a unique identification number. This number shall be legible and in plain view of the scale operator. The Contractor shall provide Electronic tickets or Physical tickets for all weighed materials. All Tickets shall, regardless of medium, at a minimum, contain the following information:

1. Date of haul;
2. Contract number;
3. Contract unit Bid item;
4. Unit of measure;
5. Identification number of hauling vehicle; and
6. Weight delivered:
    a. Net weight in the case of batch and hopper scales.
    b. Gross weight, tare (a.m. and p.m. minimum) and net weight in the case of platform scales (tare may be omitted if a tare beam is used).
    c. Approximate load out weight in the case of belt conveyor scales.

Electronic-tickets shall be uploaded to the designated site so that they can be accessed by the material receiver at the material delivery point. Physical tickets shall be handed to the inspector at the delivery point at the time materials are delivered. The material delivery point is defined as the location where the material is incorporated into the permanent Work. The Contractor's representative shall make report summaries available to the Engineer's designated receiver, not later than the end of shift, for reconciliation. Tickets for loads not verified as delivered will receive no pay.

1-09.2(5) Measurement
(December 30, 2022 APWA GSP)

Revise the first paragraph to read:

Scale Verification Checks – At the Engineer's discretion, the Engineer may perform verification checks on the accuracy of each batch, hopper, or platform scale used in weighing contract items of Work.

1-09.6 Force Account
(December 30, 2022 APWA GSP)

Supplement this section with the following:

The Contracting Agency has estimated and included in the Proposal, dollar amounts for all items to be paid per force account, only to provide a common proposal for Bidders. All such dollar amounts are to become a part of Contractor's total bid. However, the Contracting Agency does not warrant expressly or by implication, that the actual amount of work will correspond with those estimates. Payment will be made on the basis of the amount of work actually authorized by the Engineer.

1-09.9 Payments
(February 17, 2026 APWA GSP, Option B)

Delete the fourth paragraph and replace it with the following:

Progress payments for completed Work and material on hand will be based upon progress estimates prepared by the Engineer. A progress estimate cutoff date will be established at the preconstruction conference.

The initial progress estimate will be made not later than 30 days after the Contractor commences the Work, and successive progress estimates will be made every month thereafter until the Completion Date. Progress estimates made during progress of the Work are tentative, and made only for the purpose of determining progress payment. The progress estimates are subject to change at any time prior to the calculation of the Final Payment.

The value of the progress estimate will be the sum of the following:

1. Unit Price Items in the Bid Form — the approximate quantity of acceptable units of Work completed multiplied by the unit price.
2. Lump Sum Items in the Bid Form — based on the approved Contractor's lump sum breakdown for that item, or absent such a breakdown, based on the Engineer's determination.
3. Materials on Hand — 100 percent of invoiced cost of material delivered to Job site or other storage area approved by the Engineer.

4. Change Orders — entitlement for approved extra cost or completed extra Work as determined by the Engineer.

Progress payments will be made in accordance with the progress estimate less:

1. Retainage per Section 1-09.9(1), on non FHWA-funded projects;
2. The amount of Progress Payments previously made; and
3. Funds withheld by the Contracting Agency for disbursement in accordance with the Contract Documents.

Progress payments for Work performed shall not be evidence of acceptable performance or an admission by the Contracting Agency that any Work has been satisfactorily completed. The determination of payments under the Contract will be final in accordance with Section 1-05.1.

The sixth paragraph of Section 1-09.9 is deleted.

1-09.9(1) Retainage
(June 27, 2011 WSDOT GSP, Option 1)

Section 1-09.9(1) including title is deleted and replaced with the following:

Vacant

1-09.11(3) Time Limitation and Jurisdiction
(December 30, 2022 APWA GSP)

Revise this section to read*:*

For the convenience of the parties to the Contract it is mutually agreed by the parties that all claims or causes of action which the Contractor has against the Contracting Agency arising from the Contract shall be brought within 180 calendar days from the date of final acceptance (Section 1-05.12) of the Contract by the Contracting Agency; and it is further agreed that all such claims or causes of action shall be brought only in the Superior Court of the county where the Contracting Agency headquarters is located, provided that where an action is asserted against a county, RCW 36.01.050 shall control venue and jurisdiction. The parties understand and agree that the Contractor's failure to bring suit within the time period provided, shall be a complete bar to all such claims or causes of action. It is further mutually agreed by the parties that when claims or causes of action which the Contractor asserts against the Contracting Agency arising from the Contract are filed with the Contracting Agency or initiated in court, the Contractor shall permit the Contracting Agency to have timely access to all records deemed necessary by the Contracting Agency to assist in evaluating the claims or action.

1-09.13(3)A Arbitration General
(January 19, 2022 APWA GSP)

Revise the third paragraph to read:

> The Contracting Agency and the Contractor mutually agree to be bound by the decision of the arbitrator, and judgment upon the award rendered by the arbitrator may be entered in the Superior Court of the county in which the Contracting Agency's headquarters is located, provided that where claims subject to arbitration are asserted against a county, RCW 36.01.050 shall control venue and jurisdiction of the Superior Court. The decision of the arbitrator and the specific basis for the decision shall be in writing. The arbitrator shall use the Contract as a basis for decisions.

1-09.13(4) Venue for Litigation
(December 30, 2022 APWA GSP)

Revise this section to read:

> Litigation shall be brought in the Superior Court of the county in which the Contracting Agency's headquarters is located, provided that where claims are asserted against a county, RCW 36.01.050 shall control venue and jurisdiction of the Superior Court. It is mutually agreed by the parties that when litigation occurs, the Contractor shall permit the Contracting Agency to have timely access to all records deemed necessary by the Contracting Agency to assist in evaluating the claims or action.

1-10 TEMPORARY TRAFFIC CONTROL

1-10.2 Traffic Control Management

1-10.2(1) General
(October 3, 2022 WSDOT GSP, Option 1)

Section 1-10.2 is supplemented with the following:

The Traffic Control Supervisor shall be certified by one of the following:

> The Northwest Laborers-Employers Training Trust
> 27055 Ohio Ave.
> Kingston, WA 98346
> (360) 297-3035
> https://www.nwlett.edu
>
> Evergreen Safety Council
> 12545 135th 11 Ave. NE
> Kirkland, WA 98034-8709
> 1-800-521-0778

https://www.esc.org

The American Traffic Safety Services Association
15 Riverside Parkway, Suite 100
Fredericksburg, Virginia 22406-1022
Training Dept. Toll Free (877) 642-4637
Phone: (540) 368-1701
https://atssa.com/training

Integrity Safety
13912 NE 20th Ave.
Vancouver, WA 98686
(360) 574-6071
https://www.integritysafety.com

US Safety Alliance
(904) 705-5660
https://www.ussafetyalliance.com

K&D Services Inc.
2719 Rockefeller Ave.
Everett, WA 98201 36 (800) 343-4049
https://www.kndservices.net

1-10.2(1)A Traffic Control Management
(November 6, 2025 MLT GSP)

Section 1-10.2(1)A is supplemented with the following:

The Contractor is also advised that along 236th ST SW and Van Ry Boulevard (within the project area) are the routes for Community Transit bus services. The Contractor shall coordinate his/her activities by emailing construction.supervisor@commtrans.org.

1-10.3 Traffic Control Labor, Procedures, and Devices

1-10.3(1)B Other Traffic Control Labor
(*****)

Section 1-10.3(1)B is supplemented with the following:

Uniformed Police Officer

Definitions:

Uniformed Police Officer as used in this specification is a "General Authority Washington Peace Officer" as defined by RCW 10.93.020 (4), or a "Specially Commissioned Washington Peace Officer" as defined by RCW 10.93.020(11).

Law Enforcement Agency as used in this specification is a "General Authority Washington Law Enforcement Agency" as defined by RCW 10.93.020(3).

The Contractor shall arrange for off-duty Uniformed Police Officers to be present for the following activities:

1. At the commissioning of a new traffic signal, or the recommissioning of an existing traffic signal which has been upgraded.
2. Countermanding a traffic signal indication at a signalized intersection.
3. Directing vehicle and pedestrian traffic when a traffic signal indication is turned off or is inoperative.
4. Where the Engineer deems it necessary for safety, including work during hours of darkness.

The following contact information is supplied for the Contractor's convenience:

Agency Police Officer
Contact: City of Mountlake Terrace - Police Department
Attn: Jeremy Perry
Phone: (425) 670-8260
Email: jperry@mltwa.gov

County Deputy Sheriff
Contact: Snohomish County Sheriff's Office
Phone: 425-231-0235
Email: contact.sheriff@snoco.org

Washington State Patrol
Contact: District 7 - Marysville
Phone: 360-654-1204
Email:

The services provided under the bid item "Uniformed Police Officer" shall be considered a subcontractor with the attendant requirements and responsibilities.

The Contractor must obtain prior approval for use of off-duty Uniformed Police Officers through an Approved Traffic Control Plan and approved amendments to the contract traffic control Plans. The off-duty Uniformed Police Officer shall be in addition to all other personnel required for flagging according to the approved traffic control plan.

1-10.4 Measurement

1-10.4(2) Item Bids With Lump Sum for Incidentals

(April 22,2025 APWA GSP)

Section 1-10.4(2) is supplemented with the following:

"Uniformed Police Officer" will be measured by the hour. Hours will be measured for each fully equipped Uniformed Police Officer, including vehicle, if required, directing or monitoring traffic, as shown on an approved Traffic Control Plan in accordance with Section 1-10.3(1)B of these Special Provisions.

(*****)
Section 1-10.4(2) is supplemented with the following:

Traffic Control Supervisor will be measured by the hour for the time that TCS performs the Work described in Section 1-10.2(1)B.

1-10.5 Payment

1-10.5(2) Item Bids With Lump Sum for Incidentals
(*****)
Section 1-10.5(2) is supplemented with the following:

"Traffic Control Supervisor", per hour.

The unit Contract price, when applied to the number of units measured for this item in accordance with Section 1-10.4(2), shall be full compensation for all costs incurred by the Contractor in performing the Work defined in Section 1-10.2(1)B.

DIVISION 2
EARTHWORK

2-01 CLEARING, GRUBBING, AND ROADSIDE CLEANUP

2-01.1 Description
(*****)

This section is supplemented with the following: *Supplement*

Clearing and grubbing shall be to the limits established by the Plans and approved by the Engineer.

Do not damage, disturb or remove trees, shrubs, irrigation, and other vegetation outside the construction limits specified on the Plans.

Existing trees with tree grates, landscaping, and irrigation outside the limits of construction shall be protected from damage by the Contractor's operations. Damaged trees, landscaping and irrigation due to the Contractor's operations outside the limits of construction shall be replaced in coordination with the Engineer at the Contractor's sole expense.

2-01.2 Disposable of Usable Material and Debris

2-01.2(1) Disposal Method No. 1 — Open Burning
(*****)

This Section is revised with the following: *Supplement*

Disposal Method No.1, Open Burning, will not be allowed.

2-01.2(2) Disposal Method No. 2 — Waste Site
(*****)

This section is supplemented with the following: *Supplement*

A waste site has not been provided by the City for the disposal of excess materials and debris. All materials removed by clearing and grubbing operations shall be disposed of at a legal disposal site obtained by the Contractor.

2-01.3 Construction Requirements

2-01.3(3) Vacant
(*****)

Delete this section and replace with the following:

2-01.3(3) Tree Protection

The Contractor shall install tree protection fencing for protection of those trees identified and detailed on the Plans, and where directed and approved by the Engineer. No soil disturbance shall occur before tree protection fences are installed. Fence shall remain in place until all construction is completed.

Under the field direction of the Engineer, the Contractor shall prune minor roots and branches of trees indicated to remain in a manner that will not compromise the survivability of the trees, where such roots and branches obstruct installation of new construction. Any roots to be cut or accidentally broken shall be cut smoothly and any cut roots over two (2) inches in diameter shall be covered with wet fabric until backfill can be placed.

2-01.5 Payment
(*****)

This section is revised with the following:

Payment will be made for the following Bid items when they are included in the Proposal:

"Clearing and Grubbing," lump sum.

The lump sum Contract price for "Clearing and Grubbing" shall be full compensation for all Work described in Section 2-01 including removal, haul, and disposal. All costs associated with tree protection fencing and removing trees identified on the Plans shall be included in the lump sum "Clearing and Grubbing" and no additional payment will be made.

2-02 REMOVAL OF STRUCTURES AND OBSTRUCTIONS

2-02.1 Description
(*****)

This section is supplemented with the following: *Supplement*

For the purpose of bid preparation, the removal of structure and obstruction work is described herein. Whether included herein, or shown on the plans, any removal of structure and obstruction work required to complete the project work not covered under other removal items shall be included in this bid item in accordance with Section 1-04.1.

Removal of Structure and Obstruction shall include, but not be limited to the following:

- Removal of Chain Link Fence
- Removal of Pavement, Sidewalks and Curbs

- Sawcutting

This work shall also include removal of existing irrigation within the limits of construction, and capping irrigation lines to remain beyond the limits of construction. Removal and capping of irrigation lines shall be coordinated with and approved by the Engineer.

2-02.3(3) Removal of Pavement, Sidewalks, Curbs, and Gutters
(*****)

This section is supplemented with the following: *Supplement*

Existing pavement, sidewalk, and curb shall be removed at the locations shown on the Plans or as designated by the Engineer. Removal shall be accomplished by making a neat longitudinal vertical cut along the boundaries of the area to be removed. Care shall be taken during removal so as not to damage any of the existing pavement to remain in place. All remaining pavement damaged due to the Contractor's operations shall be replaced by the Contractor, to the satisfaction of the Engineer, at the Contractor's expense.

Sidewalk shall be sawcut and removed to the limits shown on the Plans. When a construction joint is near, the joint may be used as the removal limit if approved by the Engineer.

2-02.3(4) Sawcutting
(*****)

This section is added as follows: *New Section*

Where sawcutting is required, the sawcut shall be three inches deep minimum. Where the existing pavement is more than three inches thick, the portion below the top three inches may be broken after the sawcut is made. Sawcuts shall be cleaned using high-pressure water (1,400 psi or greater), or another method as approved by the Engineer.

Care shall be taken to prevent damage to the existing pavement specified to remain. All damage to existing pavement specified to remain shall be repaired in accordance with Section 1-07.13.

The Contractor shall be responsible for ensuring that special precautions are undertaken in accordance with Department of Ecology guidelines. No concrete (asphalt or cement) or concrete by-products are to be discharged into any storm drain or surface water. Cutting operations will increase the pH of water, therefore filtering is not acceptable.

Impervious surfaces contaminated from cutting operations shall be cleaned by sweepers to prevent contaminants from entering storm systems.

All sawcutting shall include removal and disposal of slurry created from water cooling/lubrication. Slurry shall not be allowed to enter storm drainage systems, ditches, or

streams. Removal and disposal of slurry shall be included in the work and no separate payment shall be made.

2-02.5 Payment
(*****)

This section is revised with the following:

Payment will be made for each of the following Bid items that are included in the Proposal:

Whether included above, or shown on the plans, any removal of structure and obstruction work required to complete the project work not covered under other removal items shall be included in the bid item for "Removal of Structures and Obstructions" in accordance with Section 1-04.1.

"Removal of Structures and Obstructions," Lump Sum

The lump sum Contract price for "Removal of Structures and Obstructions" shall be full compensation for all costs to complete the work, including sawcutting and removal of pavement, sidewalks, curbs, or gutters that lie within an excavation area.

Existing sidewalk and curb/gutter not identified for removal shall be protected, if any damage occurs by the Contractor due to construction access or construction activities, the damaged curb/gutter and sidewalk shall be replaced by the Contractor at no cost to the project owner.

2-03 ROADWAY EXCAVATION AND EMBANKMENT

2-03.1 Description
(*****)

This section is supplemented with the following: *Supplement*

Roadway excavation shall also include, but not limited to, excavation for cement concrete paving/subgrade, and planting areas.

Any excavation beyond the limits identified on the Plans, unless approved by the Engineer, shall be replaced and restored at the Contractor's expense.

2-03.3 Construction Requirements

2-03.3(14)C Compacting Earth Embankments
(*****)

This section is supplemented with the following: *Supplement*

Method C shall be used for this project.

2-03.4 Measurement
(*****)

Revise this section with the following:

Roadway excavation will be measured by the cubic yard.

Gravel borrow will be measured by the ton.

Computation of Earthwork Quantities

Only one determination of the original ground elevation will be made on this project. Measurement for Roadway Excavation including Haul will be based on the original ground elevation recorded previous to the award of this contract minus a factor to account for the removal of material during clearing and grubbing and pavement removal. It is anticipated that depth of removal of organic material during clearing and grubbing for this project will vary and a factor of minus 6 inches will be used to determine ground elevation after clearing and grubbing, and a factor of 5 inches will be used in areas of pavement removal.

If discrepancies are discovered in the ground elevations which will materially affect the quantities of earthwork, the original computations of earthwork quantities will be adjusted accordingly. Earthwork quantities will be computed, either manually or by means of electronic data processing equipment, by use of the average end area method or by the finite element analysis method utilizing digital terrain modeling techniques.

2-03.5 Payment
(*****)

This section is supplemented with the following: *Supplement*

The unit Contract price for "Roadway Excavation Incl. Haul" shall be full compensation for all labor, material, tools, and equipment, including but not limited to: excavating, loading, hauling, stockpiling, spreading, compacting, disposal of excess and unsuitable materials, and other work necessary to satisfactorily complete the work as defined in the Standard Specifications and these Special Provisions.

The unit Contract price per ton for "Gravel Borrow Incl. Haul" shall be full compensation for all costs incurred for excavating, loading, hauling, and placing the material. Gravel borrow shall only be used after all suitable excavated material or existing stockpile material onsite are exhausted, and at the approval of the Engineer.

All costs associated with hauling and disposal of excess excavated material shall be considered incidental to and included in the contract unit price for associated bid items.

2-04 HAUL

2-04.5 Payment

(*****)

This section is revised with the following:

Hauling shall be considered incidental to and included in the various bid items in the contract, unless otherwise specified in the proposal.

2-06 SUBGRADE PREPARATION

2-06.5 Measurement and Payment

(*****)

This section is supplemented with the following:

Subgrade preparation and maintenance, including watering, shall be considered as incidental to and included in the various bid items and no separate payment will be made.

2-09 STRUCTURE EXCAVATION

2-09.4 Measurement

(*****)

This Section is revised with the following:

Structural Excavation Class A and Class B will not be measured.

2-09.5 Payment

(*****)

This Section is revised with the following:

Payment of Structure Excavation Class A and Class B will be included in applicable bid items and no separate payment will be made.

2-12 CONSTRUCTION GEOSYNTHETIC

2-12.5 Payment

(*****)

This section is revised with the following:

Construction Geotextile shall be considered incidental to and included in the contract unit price for associated bid items and no separate payment will be made.

END OF DIVISION 2

DIVISION 3
AGGREGATE PRODUCTION & ACCEPTANCE

NO REVISIONS

END OF DIVISION 3

DIVISION 4
BASES

4-04 BALLAST AND CRUSHED SURFACING

4-04.1 Description
(*****)

This section is supplemented with the following: *Supplement*

All crushed surfacing material included in this contract is to be used only as designated by the Engineer and is not for the convenience of the Contractor. The Contractor shall place the material where indicated on the Plans or as directed by the Engineer.

4-04.5 Payment
(*****)

This section is supplemented with the following: *Supplement*

"Crushed Surfacing Top Course", per ton

"Crushed Surfacing Base Course", per ton

Grades and slopes verification, compaction and proof rolling shall be considered incidental to and included in unit contract price for "Crushed Surfacing Top Course."

END OF DIVISION 4

DIVISION 5
SURFACE TREATMENTS AND PAVEMENTS

5-04 Hot Mix Asphalt
(December 12, 2025 APWA GSP)

Delete Section 5-04 and replace it with the following:

5-04.1 Description
This Work shall consist of providing and placing one or more layers of plant-mixed hot mix asphalt (HMA) on a prepared foundation or base in accordance with these Specifications and the lines, grades, thicknesses, and typical cross-sections shown in the Plans. The manufacture of HMA may include warm mix asphalt (WMA) processes in accordance with these Specifications. WMA processes include organic additives, chemical additives, and foaming.

HMA shall be composed of asphalt binder and mineral materials as may be required, mixed in the proportions specified to provide a homogeneous, stable, and workable mixture.

5-04.2 Materials
Materials shall meet the requirements of the following sections:

Asphalt Binder	9-02.1(4)
Cationic Emulsified Asphalt	9-02.1(6)
Anti-Stripping Additive	9-02.4
HMA Additive	9-02.5
Aggregates	9-03.8
Recycled Asphalt Pavement (RAP)	9-03.8(3)B, 9-03.21
Reclaimed Asphalt Shingles (RAS)	9-03.8(3)B, 9-03.21
Mineral Filler	9-03.8(5)
Recycled Material	9-03.21

The Contract documents may establish that the various mineral materials required for the manufacture of HMA will be furnished in whole or in part by the Contracting Agency. If the documents do not establish the furnishing of any of these mineral materials by the Contracting Agency, the Contractor shall be required to furnish such materials in the amounts required for the designated mix. Mineral materials include coarse and fine aggregates, and mineral filler.

The Contractor may choose to utilize recycled asphalt pavement (RAP) in the production of HMA. The RAP may be from pavements removed under the Contract, if any, or pavement material from an existing stockpile.

The Contractor may use up to 20 percent RAP by total weight of HMA with no additional sampling or testing of the RAP.

If the Contractor wishes to utilize High RAP/Any RAS, the design must be listed on the WSDOT Qualified Products List (QPL).

The grade of asphalt binder shall be as required by the Contract. Blending of asphalt binder from different sources is not permitted.

The Contractor may only use warm mix asphalt (WMA) processes in the production of HMA with 20 percent or less RAP by total weight of HMA. The Contractor shall submit to the Engineer for approval the process that is proposed and how it will be used in the manufacture of HMA.

Production of aggregates shall comply with the requirements of Section 3-01.
Preparation of stockpile site, the stockpiling of aggregates, and the removal of aggregates from stockpiles shall comply with the requirements of Section 3-02.

5-04.2(1) How to Get an HMA Mix Design on the QPL
If the Contractor wishes to submit a mix design for inclusion in the Qualified Products List (QPL), please follow the WSDOT process outlined in Standard Specification 5-04.2(1).

5-04.2(1)A Vacant

5-04.2(2) Mix Design - Obtaining Project Approval
No paving shall begin prior to the approval of the mix design by the Engineer.

Nonstatistical evaluation will be used for all HMA not designated as Commercial HMA in the Contract documents.

Commercial evaluation will be used for Commercial HMA and for other classes of HMA in the following applications: sidewalks, road approaches, ditches, slopes, paths, trails, gores, prelevel, temporary pavement, and pavement repair. Other nonstructural applications of HMA accepted by commercial evaluation shall be as approved by the Project Engineer. Sampling and testing of HMA accepted by commercial evaluation will be at the option of the Project Engineer. The Proposal quantity of HMA that is accepted by commercial evaluation will be excluded from the quantities used in the determination of nonstatistical evaluation.

Nonstatistical Mix Design. Fifteen days prior to the first day of paving the Contractor shall provide one of the following mix design verification certifications for Contracting Agency review;

- The WSDOT Mix Design Evaluation Report from the current WSDOT QPL, or one of the mix design verification certifications listed below.

- The proposed HMA mix design on WSDOT Form 350-042 with the seal and certification (stamp & signature) of a valid licensed Washington State Professional Engineer. * (see below)
- The Mix Design Report for the proposed HMA mix design developed by a qualified City or County laboratory that is within one year of the approval date. * (see below)

The mix design shall be performed by a lab accredited by a national authority such as Laboratory Accreditation Bureau, L-A-B for Construction Materials Testing, The Construction Materials Engineering Council (CMEC's) ISO 17025 or AASHTO Accreditation Program (AAP) and shall supply evidence of participation in the AASHTO: resource proficiency sample program.

Mix designs for HMA accepted by Nonstatistical evaluation shall:

- Be designed for 3 million equivalent single axle loads (ESALs).
- Have the aggregate structure and asphalt binder content determined in accordance with WSDOT Standard Operating Procedure 732 and meet the requirements of Sections 9-03.8(2), except that Hamburg testing for ruts and stripping are at the discretion of the Engineer, and 9-03.8(6).
- Have anti-strip requirements, if required, for the proposed mix design determined in accordance with AASHTO T 283 or T 324 or based on historic anti-strip and aggregate source compatibility from previous WSDOT lab testing.

* At the discretion of the Engineer, agencies may accept verified mix designs older than 12 months from the original verification date with a certification from the Contractor that the materials and sources are the same as those shown on the original mix design.

Commercial Evaluation Mix Design. Approval of a mix design for "Commercial Evaluation" will be based on a review of the Contractor's submittal of WSDOT Form 350-042 (for commercial mixes, AASHTO T 324 evaluation is not required) or a Mix Design from the current WSDOT QPL or from one of the processes allowed by this section. Testing of the HMA by the Contracting Agency for mix design approval is not required.

For the Bid Item Commercial HMA, the Contractor shall select a class of HMA and design level of ESALs appropriate for the required use.

5-04.2(2)B Using Warm Mix Asphalt Processes

The Contractor may elect to use additives that reduce the optimum mixing temperature or serve as a compaction aid for producing HMA. Additives include organic additives, chemical additives and foaming processes. The use of Additives is subject to the following:

- Do not use additives that reduce the mixing temperature more than allowed in Section 5-04.3(6) in the production of mixtures.

- Before using additives, obtain the Engineer's approval using WSDOT Form 350-076 to describe the proposed additive and process.

5-04.3 Construction Requirements

5-04.3(1) Weather Limitations

Do not place HMA for wearing course on any Traveled Way beginning October 1st through March 31st of the following year without written concurrence from the Engineer.

Do not place HMA on any wet surface, or when the average surface temperatures are less than those specified below, or when weather conditions otherwise prevent the proper handling or finishing of the HMA.

Minimum Surface Temperature for Paving

Compacted Thickness (Feet)	Wearing Course	Other Courses
Less than 0.10	55°F	45°F
0.10 to .20	45°F	35°F
More than 0.20	35°F	35°F

5-04.3(2) Paving Under Traffic

When the Roadway being paved is open to traffic, the requirements of this Section shall apply.

The Contractor shall keep intersections open to traffic at all times except when paving the intersection or paving across the intersection. During such time, and provided that there has been an advance warning to the public, the intersection may be closed for the minimum time required to place and compact the mixture. In hot weather, the Engineer may require the application of water to the pavement to accelerate the finish rolling of the pavement and to shorten the time required before reopening to traffic.

Before closing an intersection, advance warning signs shall be placed, and signs shall also be placed marking the detour or alternate route.

During paving operations, temporary pavement markings shall be maintained throughout the project. Temporary pavement markings shall be installed on the Roadway prior to opening to traffic. Temporary pavement markings shall be in accordance with Section 8-23.

All costs in connection with performing the Work in accordance with these requirements, except the cost of temporary pavement markings, shall be included in the unit Contract prices for the various Bid items involved in the Contract.

5-04.3(3) Equipment

5-04.3(3)A Mixing Plant

Plants used for the preparation of HMA shall conform to the following requirements:

1. **Equipment for Preparation of Asphalt Binder** – Tanks for the storage of asphalt binder shall be equipped to heat and hold the material at the required temperatures. The heating shall be accomplished by steam coils, electricity, or other approved means so that no flame shall be in contact with the storage tank. The circulating system for the asphalt binder shall be designed to ensure proper and continuous circulation during the operating period. A valve for the purpose of sampling the asphalt binder shall be placed in either the storage tank or in the supply line to the mixer.

2. **Thermometric Equipment** – An armored thermometer, capable of detecting temperature ranges expected in the HMA mix, shall be fixed in the asphalt binder feed line at a location near the charging valve at the mixer unit. The thermometer location shall be convenient and safe for access by Inspectors. The plant shall also be equipped with an approved dial-scale thermometer, a mercury actuated thermometer, an electric pyrometer, or another approved thermometric instrument placed at the discharge chute of the drier to automatically register or indicate the temperature of the heated aggregates. This device shall be in full view of the plant operator.

3. **Heating of Asphalt Binder** – The temperature of the asphalt binder shall not exceed the maximum recommended by the asphalt binder manufacturer nor shall it be below the minimum temperature required to maintain the asphalt binder in a homogeneous state. The asphalt binder shall be heated in a manner that will avoid local variations in heating. The heating method shall provide a continuous supply of asphalt binder to the mixer at a uniform average temperature with no individual variations exceeding 25°F. Also, when a WMA additive is included in the asphalt binder, the temperature of the asphalt binder shall not exceed the maximum recommended by the manufacturer of the WMA additive.

4. **Sampling and Testing of Mineral Materials** – The HMA plant shall be equipped with a mechanical sampler for the sampling of the mineral materials. The mechanical sampler shall meet the requirements of Section 1-05.6 for the crushing and screening operation. The Contractor shall provide for the setup and operation of the field-testing facilities of the Contracting Agency as provided for in Section 3-01.2(2).

5. **Sampling HMA** – The HMA plant shall provide for sampling HMA by one of the following methods:

    a. A mechanical sampling device attached to the HMA plant.

    b. Platforms or devices to enable sampling from the hauling vehicle without entering the hauling vehicle.

5-04.3(3)B Hauling Equipment

Trucks used for hauling HMA shall have tight, clean, smooth metal beds and shall have a cover of canvas or other suitable material of sufficient size to protect the mixture from adverse weather. Whenever the weather conditions during the work shift include, or are forecast to include precipitation or an air temperature less than 45°F or when time from loading to unloading exceeds 30 minutes, the cover shall be securely attached to protect the HMA.

The Contractor shall provide an environmentally benign means to prevent the HMA mixture from adhering to the hauling equipment. Excess release agent shall be drained prior to filling hauling equipment with HMA. Petroleum derivatives or other coating material that contaminate or alter the characteristics of the HMA shall not be used. For live bed trucks, the conveyer shall be in operation during the process of applying the release agent.

5-04.3(3)C Pavers

HMA pavers shall be self-contained, power-propelled units, provided with an internally heated vibratory screed and shall be capable of spreading and finishing courses of HMA plant mix material in lane widths required by the paving section shown in the Plans.

The HMA paver shall be in good condition and shall have the most current equipment available from the manufacturer for the prevention of segregation of the HMA mixture installed, in good condition, and in working order. The equipment certification shall list the make, model, and year of the paver and any equipment that has been retrofitted.

The screed shall be operated in accordance with the manufacturer's recommendations and shall effectively produce a finished surface of the required evenness and texture without tearing, shoving, segregating, or gouging the mixture. A copy of the manufacturer's recommendations shall be provided upon request by the Contracting Agency. Extensions will be allowed provided they produce the same results, including ride, density, and surface texture as obtained by the primary screed. Extensions without augers and an internally heated vibratory screed shall not be used in the Traveled Way.

When specified in the Contract, reference lines for vertical control will be required. Lines shall be placed on both outer edges of the Traveled Way of each Roadway. Horizontal control utilizing the reference line will be permitted. The grade and slope for intermediate

lanes shall be controlled automatically from reference lines or by means of a mat referencing device and a slope control device. When the finish of the grade prepared for paving is superior to the established tolerances and when, in the opinion of the Engineer, further improvement to the line, grade, cross-section, and smoothness can best be achieved without the use of the reference line, a mat referencing device may be substituted for the reference line. Substitution of the device will be subject to the continued approval of the Engineer. A joint matcher may be used subject to the approval of the Engineer. The reference line may be removed after the completion of the first course of HMA when approved by the Engineer. Whenever the Engineer determines that any of these methods are failing to provide the necessary vertical control, the reference lines will be reinstalled by the Contractor.

The Contractor shall furnish and install all pins, brackets, tensioning devices, wire, and accessories necessary for satisfactory operation of the automatic control equipment.

If the paving machine in use is not providing the required finish, the Engineer may suspend Work as allowed by Section 1-08.6. Any cleaning or solvent type liquids spilled on the pavement shall be thoroughly removed before paving proceeds.

5-04.3(3)D Material Transfer Device or Material Transfer Vehicle

A Material Transfer Device/Vehicle (MTD/V) shall only be used with the Engineer's approval, unless otherwise required by the Contract.

Where an MTD/V is required by the Contract, the Engineer may approve paving without an MTD/V, at the request of the Contractor. The Engineer will determine if an equitable adjustment in cost or time is due.

When used, the MTD/V shall mix the HMA after delivery by the hauling equipment and prior to placement by the paving machine. Mixing of the HMA shall be sufficient to obtain a uniform temperature throughout the mixture. If a windrow elevator is used, the length of the windrow may be limited in urban areas or through intersections, at the discretion of the Engineer.

To be approved for use, an MTV:

1. Shall be self-propelled vehicle, separate from the hauling vehicle or paver.

2. Shall not be connected to the hauling vehicle or paver.

3. May accept HMA directly from the haul vehicle or pick up HMA from a windrow.

4. Shall mix the HMA after delivery by the hauling equipment and prior to placement into the paving machine.

5. Shall mix the HMA sufficiently to obtain a uniform temperature throughout the mixture.

To be approved for use, an MTD:

1. Shall be positively connected to the paver.

2. May accept HMA directly from the haul vehicle or pick up HMA from a windrow.

3. Shall mix the HMA after delivery by the hauling equipment and prior to placement into the paving machine.

4. Shall mix the HMA sufficiently to obtain a uniform temperature throughout the mixture.

5-04.3(3)E Rollers

Rollers shall be of the steel wheel, vibratory, oscillatory, or pneumatic tire type, in good condition and capable of reversing without backlash. Operation of the roller shall be in accordance with the manufacturer's recommendations. When ordered by the Engineer for any roller planned for use on the project, the Contractor shall provide a copy of the manufacturer's recommendation for the use of that roller for compaction of HMA. The number and weight of rollers shall be sufficient to compact the mixture in compliance with the requirements of Section 5-04.3(10). The use of equipment that results in crushing of the aggregate will not be permitted. Rollers producing pickup, washboard, uneven compaction of the surface, displacement of the mixture or other undesirable results shall not be used.

5-04.3(4) Preparation of Existing Paved Surfaces

When the surface of the existing pavement or old base is irregular, the Contractor shall bring it to a uniform grade and cross-section as shown on the Plans or approved by the Engineer.

Preleveling of uneven or broken surfaces over which HMA is to be placed may be accomplished by using an asphalt paver, a motor patrol grader, or by hand raking, as approved by the Engineer.

Compaction of preleveling HMA shall be to the satisfaction of the Engineer and may require the use of small steel wheel rollers, plate compactors, or pneumatic rollers to avoid bridging across preleveled areas by the compaction equipment. Equipment used for the compaction of preleveling HMA shall be approved by the Engineer.

Before construction of HMA on an existing paved surface, the entire surface of the pavement shall be clean. All fatty asphalt patches, grease drippings, and other objectionable matter shall be entirely removed from the existing pavement. All pavements or bituminous surfaces shall be thoroughly cleaned of dust, soil, pavement grindings, and other foreign matter. All holes and small depressions shall be filled with an appropriate class of HMA. The surface of the patched area shall be leveled and compacted thoroughly. Prior to the application of tack coat, or paving, the condition of the surface shall be approved by the Engineer.

A tack coat of asphalt shall be applied to all paved surfaces on which any course of HMA is to be placed or abutted; except that tack coat may be omitted from clean, newly paved surfaces at the discretion of the Engineer. Tack coat shall be uniformly applied to cover the existing pavement with a thin film of residual asphalt free of streaks and bare spots at a rate between 0.02 and 0.10 gallons per square yard of retained asphalt. The rate of application shall be approved by the Engineer. A heavy application of tack coat shall be applied to all joints. For Roadways open to traffic, the application of tack coat shall be limited to surfaces that will be paved during the same working shift. The spreading equipment shall be equipped with a thermometer to indicate the temperature of the tack coat material.

Equipment shall not operate on tacked surfaces until the tack has broken and cured. If the Contractor's operation damages the tack coat it shall be repaired prior to placement of the HMA.

The tack coat shall be CSS-1, or CSS-1h emulsified asphalt. The CSS-1 and CSS-1h emulsified asphalt may be diluted once with water at a rate not to exceed one-part water to one-part emulsified asphalt. The tack coat shall have sufficient temperature such that it may be applied uniformly at the specified rate of application and shall not exceed the maximum temperature recommended by the emulsified asphalt manufacturer. PG grade asphalt or non-tracking tack formulas may be used upon approval of the Engineer.

5-04.3(4)A Crack Sealing

When the Proposal includes a pay item for crack sealing, seal cracks in accordance with Section 5-03.

5-04.3(4)B Vacant

5-04.3(4)C Pavement Repair

The Contractor shall excavate pavement repair areas and shall backfill these with HMA in accordance with the details shown in the Plans and as marked in the field. The Contractor shall conduct the excavation operations in a manner that will protect the pavement that is to remain. Pavement not designated to be removed that is damaged as a result of the Contractor's operations shall be repaired by the Contractor to the satisfaction of the Engineer at no cost to the Contracting Agency. The Contractor shall excavate only within one lane at a

time unless approved otherwise by the Engineer. The Contractor shall not excavate more area than can be completely finished during the same shift, unless approved by the Engineer.

Unless otherwise shown in the Plans or determined by the Engineer, excavate to a depth of 1.0 feet. The Engineer will make the final determination of the excavation depth required. The minimum width of any pavement repair area shall be 40 inches unless shown otherwise in the Plans. Before any excavation, the existing pavement shall be sawcut or shall be removed by a pavement grinder. Excavated materials will become the property of the Contractor and shall be disposed of in a Contractor-provided site off the Right of Way or used in accordance with Sections 2-02.3(3) or 9-03.21.

Asphalt for tack coat shall be required as specified in Section 5-04.3(4). A heavy application of tack coat shall be applied to all surfaces of existing pavement in the pavement repair area.

Placement of the HMA backfill shall be accomplished in lifts not to exceed 0.35-foot compacted depth. Lifts that exceed 0.35-foot of compacted depth may be accomplished with the approval of the Engineer. Each lift shall be thoroughly compacted by a mechanical tamper or a roller.

5-04.3(5) Producing/Stockpiling Aggregates and RAP

Aggregates and RAP shall be stockpiled according to the requirements of Section 3-02. Sufficient storage space shall be provided for each size of aggregate and RAP. Materials shall be removed from stockpile(s) in a manner to ensure minimal segregation when being moved to the HMA plant for processing into the final mixture. Different aggregate sizes shall be kept separated until they have been delivered to the HMA plant.

5-04.3(5)A Vacant

5-04.3(6) Mixing

After the required amount of mineral materials, asphalt binder, recycling agent and anti-stripping additives have been introduced into the mixer the HMA shall be mixed until complete and uniform coating of the particles and thorough distribution of the asphalt binder throughout the mineral materials is ensured.

When discharged, the temperature of the HMA shall not exceed the optimum mixing temperature by more than 25°F as shown on the reference mix design report or as approved by the Engineer. Also, when a WMA additive is included in the manufacture of HMA, the discharge temperature of the HMA shall not exceed the maximum recommended by the manufacturer of the WMA additive. A maximum water content of 2 percent in the mix, at discharge, will be allowed providing the water causes no problems with handling, stripping, or flushing. If the water in the HMA causes any of these problems, the moisture content shall be reduced as directed by the Engineer.

Storing or holding of the HMA in approved storage facilities will be permitted with approval of the Engineer, but in no event shall the HMA be held for more than 24 hours. HMA held for more than 24 hours after mixing shall be rejected. Rejected HMA shall be disposed of by the Contractor at no expense to the Contracting Agency. The storage facility shall have an accessible device located at the top of the cone or about the third point. The device shall indicate the amount of material in storage. No HMA shall be accepted from the storage facility when the HMA in storage is below the top of the cone of the storage facility, except as the storage facility is being emptied at the end of the working shift.

Recycled asphalt pavement (RAP) utilized in the production of HMA shall be sized prior to entering the mixer so that a uniform and thoroughly mixed HMA is produced. If there is evidence of the recycled asphalt pavement not breaking down during the heating and mixing of the HMA, the Contractor shall immediately suspend the use of the RAP until changes have been approved by the Engineer. After the required amount of mineral materials, RAP, new asphalt binder and asphalt rejuvenator have been introduced into the mixer the HMA shall be mixed until complete and uniform coating of the particles and thorough distribution of the asphalt binder throughout the mineral materials, and RAP is ensured.

5-04.3(7) Spreading and Finishing

The mixture shall be placed upon an approved surface, spread, and struck off to the grade and elevation established. HMA pavers complying with Section 5-04.3(3) shall be used to distribute the mixture. Unless otherwise directed by the Engineer, the nominal compacted depth of any layer of any course shall not exceed the following:

HMA Class 1”	0.35 feet
HMA Class ¾” and HMA Class ½”	
wearing course	0.30 feet
other courses	0.35 feet
HMA Class ⅜”	0.15 feet

On areas where irregularities or unavoidable obstacles make the use of mechanical spreading and finishing equipment impractical, the paving may be done with other equipment or by hand.

When more than one JMF is being utilized to produce HMA, the material produced for each JMF shall be placed by separate spreading and compacting equipment. The intermingling of HMA produced from more than one JMF is prohibited. Each strip of HMA placed during a work shift shall conform to a single JMF established for the class of HMA specified unless there is a need to make an adjustment in the JMF.

5-04.3(8) Aggregate Acceptance Prior to Incorporation in HMA

For HMA accepted by nonstatistical evaluation, the aggregate properties of sand equivalent, uncompacted void content, and fracture will be evaluated in accordance with Section 3-04.

Sampling and testing of aggregates for HMA accepted by commercial evaluation will be at the option of the Engineer.

5-04.3(9) HMA Mixture Acceptance

Acceptance of HMA shall be as provided under nonstatistical, or commercial evaluation.

Nonstatistical evaluation will be used for the acceptance of HMA unless Commercial Evaluation is specified.

Commercial evaluation will be used for Commercial HMA and for other classes of HMA in the following applications: sidewalks, road approaches, ditches, slopes, paths, trails, gores, prelevel, temporary pavement, and pavement repair. Other nonstructural applications of HMA accepted by commercial evaluation shall be as approved by the Engineer. Sampling and testing of HMA accepted by commercial evaluation will be at the option of the Engineer.

The mix design will be the initial JMF for the class of HMA. The Contractor may request a change in the JMF. Any adjustments to the JMF will require the approval of the Engineer and may be made in accordance with this section.

HMA Tolerances and Adjustments

1. **Job Mix Formula Tolerances** – The constituents of the mixture at the time of acceptance shall be within tolerance. The tolerance limits will be established as follows:

   For Asphalt Binder and Air Voids (Va), the acceptance limits are determined by adding the tolerances below to the approved JMF values. These values will also be the Upper Specification Limit (USL) and Lower Specification Limit (LSL) required in Section 1-06.2(2)D2

Property	Non-Statistical Evaluation	Commercial Evaluation
Asphalt Binder	+/- 0.5%	+/- 0.7%
Air Voids, Va	2.5% min. and 5.5% max	N/A

   For Aggregates in the mixture:

   a. First, determine preliminary upper and lower acceptance limits by applying the following tolerances to the approved JMF.

Aggregate Percent Passing	Non-Statistical Evaluation	Commercial Evaluation
1", ¾", ½", and 3/8" sieves	+/- 6%	+/- 8%
No. 4 sieve	+/-6%	+/- 8%
No. 8 Sieve	+/- 6%	+/-8%
No. 200 sieve	+/- 2.0%	+/- 3.0%

b. Second, adjust the preliminary upper and lower acceptance limits determined from step (a) the minimum amount necessary so that none of the aggregate properties are outside the control points in Section 9-03.8(6), except as specified below in (c). The resulting values will be the upper and lower acceptance limits for aggregates, as well as the USL and LSL required in Section 1-06.2(2)D2.

c. These tolerances and specification limits constitute the allowable limits as described in Section 1-06.2. The tolerance limit for aggregate shall not exceed the limits of the control points, except the No. 8 tolerance is +/- 6% from the JMF, the No. 200 tolerance is +/- 2.0% from the JMF with a minimum of 2% and a maximum of 8.0% passing the No. 200 sieve. Other tolerance limits for sieves designated as 100 percent passing will be 99-100

2. **Job Mix Formula Adjustments** – An adjustment to the aggregate gradation or asphalt binder content of the JMF requires approval of the Engineer. Adjustments to the JMF will only be considered if the change produces material of equal or better quality and may require the development of a new mix design if the adjustment exceeds the amounts listed below.

   a. **Aggregates** –2 percent for the aggregate passing the 1½″, 1″, ¾″, ½″, ⅜″, and the No. 4 sieves, 1 percent for aggregate passing the No. 8 sieve, and 0.5 percent for the aggregate passing the No. 200 sieve. The adjusted JMF shall be within the range of the control points in Section 9-03.8(6).

   b. **Asphalt Binder Content** – The Engineer may order or approve changes to asphalt binder content. The maximum adjustment from the approved mix design for the asphalt binder content shall be 0.3 percent.

5-04.3(9)A Vacant

5-04.3(9)B Vacant

5-04.3(9)C Mixture Acceptance – Nonstatistical Evaluation

HMA mixture which is accepted by Nonstatistical Evaluation will be evaluated by the Contracting Agency by dividing the HMA tonnage into lots.

5-04.3(9)C1 Mixture Nonstatistical Evaluation – Lots and Sublots

A lot is represented by randomly selected samples of the same mix design that will be tested for acceptance. A lot is defined as the total quantity of material or work produced for each Job Mix Formula placed. Only one lot per JMF is expected. A sublot shall be equal to one day's production or 800 tons, whichever is less except that the final sublot will be a minimum of 400 tons and may be increased to 1200 tons.

All of the test results obtained from the acceptance samples from a given lot shall be evaluated collectively. If the Contractor requests a change to the JMF that is approved, the material produced after the change will be evaluated on the basis of the new JMF for the remaining sublots in the current lot and for acceptance of subsequent lots. For a lot in progress with a CPF less than 0.75, a new lot will begin at the Contractor's request after the Engineer is satisfied that material conforming to the Specifications can be produced.

Sampling and testing for evaluation shall be performed on the frequency of one sample per sublot.

5-04.3(9)C2 Mixture Nonstatistical Evaluation Sampling

Samples for acceptance testing shall be obtained by the Contractor when ordered by the Engineer. The Contractor shall sample the HMA mixture in the presence of the Engineer and in accordance with AASHTO T 168. A minimum of three samples should be taken for each class of HMA placed on a project. If used in a structural application, at least one of the three samples shall be tested.

Sampling and testing HMA in a structural application where quantities are less than 400 tons is at the discretion of the Engineer.

For HMA used in a structural application and with a total project quantity less than 800 tons but more than 400 tons, a minimum of one acceptance test shall be performed. In all cases, a minimum of 3 samples will be obtained at the point of acceptance, a minimum of one of the three samples will be tested for conformance to the JMF:

- If the test results are found to be within specification requirements, additional testing will be at the Engineer's discretion.

- If test results are found not to be within specification requirements, additional testing of the remaining samples to determine a CPF shall be performed.

5-04.3(9)C3 Mixture Nonstatistical Evaluation – Acceptance Testing

Testing of HMA for compliance of V_a will at the option of the Contracting Agency. If tested, compliance of V_a will use WSDOT SOP 731.

Testing for compliance of asphalt binder content will be by WSDOT FOP for AASHTO T 308.

Testing for compliance of gradation will be by FOP for WAQTC T 27/T 11.

5-04.3(9)C4 Mixture Nonstatistical Evaluation – Pay Factors

For each lot of material falling outside the tolerance limits in 5-04.3(9), the Contracting Agency will determine a CPF using the following price adjustment factors:

Table of Price Adjustment Factors	
Constituent	**Factor "f"**
All aggregate passing: 1½″, 1″, ¾″, ½″, ⅜″ and No.4 sieves	2
All aggregate passing No. 8 sieve	15
All aggregate passing No. 200 sieve	20
Asphalt binder	40
Air Voids (Va) (where applicable)	20

Each lot of HMA produced under Nonstatistical Evaluation and having all constituents falling within the tolerance limits of the job mix formula shall be accepted at the unit Contract price with no further evaluation. When one or more constituents fall outside the nonstatistical tolerance limits in the Job Mix Formula shown in Table of Price Adjustment Factors, the lot shall be evaluated in accordance with Section 1-06.2 to determine the appropriate CPF. The nonstatistical tolerance limits will be used in the calculation of the CPF and the maximum CPF shall be 1.00. When less than three sublots exist, backup samples of the existing sublots or samples from the Roadway shall be tested to provide a minimum of three sets of results for evaluation.

5-04.3(9)C5 Vacant

5-04.3(9)C6 Mixture Nonstatistical Evaluation – Price Adjustments

For each lot of HMA mix produced under Nonstatistical Evaluation when the calculated CPF is less than 1.00, a Nonconforming Mix Factor (NCMF) will be determined. The NCMF equals the algebraic difference of CPF minus 1.00 multiplied by 60 percent. The total job

mix compliance price adjustment will be calculated as the product of the NCMF, the quantity of HMA in the lot in tons, and the unit Contract price per ton of mix.

If a constituent is not measured in accordance with these Specifications, its individual pay factor will be considered 1.00 in calculating the CPF.

5-04.3(9)C7 Mixture Nonstatistical Evaluation - Retests

The Contractor may request a sublot be retested. To request a retest, the Contractor shall submit a written request within 7 calendar days after the specific test results have been received. A split of the original acceptance sample will be retested. The split of the sample will not be tested with the same tester that ran the original acceptance test. The sample will be tested for a complete gradation analysis, asphalt binder content, and, at the option of the agency, V_a. The results of the retest will be used for the acceptance of the HMA in place of the original sublot sample test results. The cost of testing will be deducted from any monies due or that may come due the Contractor under the Contract at the rate of $500 per sample.

5-04.3(9)D Mixture Acceptance – Commercial Evaluation

If sampled and tested, HMA produced under Commercial Evaluation and having all constituents falling within the tolerance limits of the job mix formula shall be accepted at the unit Contract price with no further evaluation. When one or more constituents fall outside the commercial tolerance limits in the Job Mix Formula shown in 5-04.3(9), the lot shall be evaluated in accordance with Section 1-06.2 to determine the appropriate CPF. The commercial tolerance limits will be used in the calculation of the CPF and the maximum CPF shall be 1.00. When less than three sublots exist, backup samples of the existing sublots or samples from the street shall be tested to provide a minimum of three sets of results for evaluation.

For each lot of HMA mix produced and tested under Commercial Evaluation when the calculated CPF is less than 1.00, a Nonconforming Mix Factor (NCMF) will be determined. The NCMF equals the algebraic difference of CPF minus 1.00 multiplied by 60 percent. The Job Mix Compliance Price Adjustment will be calculated as the product of the NCMF, the quantity of HMA in the lot in tons, and the unit Contract price per ton of mix.

If a constituent is not measured in accordance with these Specifications, its individual pay factor will be considered 1.00 in calculating the CPF.

5-04.3(10) HMA Compaction Acceptance

HMA mixture accepted by nonstatistical evaluation that is used in traffic lanes, including lanes for intersections, ramps, truck climbing, weaving, and speed change, and having a specified compacted course thickness greater than 0.10-foot, shall be compacted to a specified level of relative density. The specified level of relative density shall be a CPF of not less than 0.75 when evaluated in accordance with Section 1-06.2, using a LSL of 92.0 (minimum of 92 percent of the maximum density). The maximum density shall be

determined by WSDOT FOP for AASHTO T 729. The specified level of density attained will be determined by the evaluation of the density of the pavement. The density of the pavement shall be determined in accordance with WSDOT FOP for WAQTC TM 8, except that gauge correlation will be at the discretion of the Engineer, when using the nuclear density gauge and WSDOT SOP 736 when using cores to determine density.

Tests for the determination of the pavement density will be taken in accordance with the required procedures for measurement by a nuclear density gauge or Roadway cores after completion of the finish rolling.

If the Contracting Agency uses a nuclear density gauge to determine density the test procedures FOP for WAQTC TM 8 and WSDOT SOP T 729 will be used on the day the mix is placed and prior to opening to traffic.

Roadway cores for density may be obtained by either the Contracting Agency or the Contractor in accordance with WSDOT SOP 734. The core diameter shall be 4-inches minimum, unless otherwise approved by the Engineer. Roadway cores will be tested by the Contracting Agency in accordance with WSDOT FOP for AASHTO T 166.

If the Contract includes the Bid item “Roadway Core”, the cores shall be obtained by the Contractor in the presence of the Engineer on the same day the mix is placed and at locations designated by the Engineer. If the Contract does not include the Bid item “Roadway Core”, the Contracting Agency will obtain the cores.

For a lot in progress with a CPF less than 0.75, a new lot will begin at the Contractor’s request after the Engineer is satisfied that material conforming to the Specifications can be produced.

HMA mixture accepted by commercial evaluation and HMA constructed under conditions other than those listed above shall be compacted on the basis of a test point evaluation of the compaction train. The test point evaluation shall be performed in accordance with instructions from the Engineer. The number of passes with an approved compaction train, required to attain the maximum test point density, shall be used on all subsequent paving.

HMA for preleveling shall be thoroughly compacted. HMA that is used for preleveling wheel rutting shall be compacted with a pneumatic tire roller unless otherwise approved by the Engineer.

Test Results

For a sublot that has been tested with a nuclear density gauge that did not meet the minimum of 92 percent of the reference maximum density in a compaction lot with a CPF below 1.00 and thus subject to a price reduction or rejection, the Contractor may request that a core be used for determination of the relative density of the sublot. The relative density of the core

will replace the relative density determined by the nuclear density gauge for the sublot and will be used for calculation of the CPF and acceptance of HMA compaction lot.

When cores are taken by the Contracting Agency at the request of the Contractor, they shall be requested by noon of the next workday after the test results for the sublot have been provided or made available to the Contractor. Core locations shall be outside of wheel paths and as determined by the Engineer. Traffic control shall be provided by the Contractor as requested by the Engineer. Failure by the Contractor to provide the requested traffic control will result in forfeiture of the request for cores. When the CPF for the lot based on the results of the HMA cores is less than 1.00, the cost for the coring will be deducted from any monies due or that may become due the Contractor under the Contract at the rate of $200 per core and the Contractor shall pay for the cost of the traffic control.

5-04.3(10)A HMA Compaction – General Compaction Requirements

Compaction shall take place when the mixture is in the proper condition so that no undue displacement, cracking, or shoving occurs. Areas inaccessible to large compaction equipment shall be compacted by other mechanical means. Any HMA that becomes loose, broken, contaminated, shows an excess or deficiency of asphalt, or is in any way defective, shall be removed and replaced with new hot mix that shall be immediately compacted to conform to the surrounding area.

The type of rollers to be used and their relative position in the compaction sequence shall generally be the Contractor's option, provided the specified densities are attained. Unless the Engineer has approved otherwise, rollers shall only be operated in the static mode when the internal temperature of the mix is less than 175°F. Regardless of mix temperature, a roller shall not be operated in a mode that results in checking or cracking of the mat. Rollers shall only be operated in static mode on bridge decks.

5-04.3(10)B HMA Compaction - Cyclic Density

Low cyclic density areas are defined as spots or streaks in the pavement that are less than 90 percent of the theoretical maximum density. At the Engineer's discretion, the Engineer may evaluate the HMA pavement for low cyclic density, and when doing so will follow WSDOT SOP 733. A $1500 Cyclic Density Price Adjustment will be assessed for any 500-foot section with two or more density readings below 90 percent of the theoretical maximum density.

5-04.3(10)C Vacant

5-04.3(10)D HMA Nonstatistical Compaction

5-04.3(10)D1 HMA Nonstatistical Compaction - Lots and Sublots

HMA compaction which is accepted by nonstatistical evaluation will be based on acceptance testing performed by the Contracting Agency dividing the project into compaction lots.

A lot is represented by randomly selected samples of the same mix design that will be tested for acceptance. A lot is defined as the total quantity of material or work produced for each Job Mix Formula placed. Only one lot per JMF is expected. A sublot shall be equal to one day's production or 400 tons, whichever is less except that the final sublot will be a minimum of 200 tons and may be increased to 800 tons. Testing for compaction will be at the rate of 5 tests per sublot per WSDOT T 738.

The sublot locations within each density lot will be determined by the Engineer. For a lot in progress with a CPF less than 0.75, a new lot will begin at the Contractor's request after the Engineer is satisfied that material conforming to the Specifications can be produced.

HMA mixture accepted by commercial evaluation and HMA constructed under conditions other than those listed above shall be compacted on the basis of a test point evaluation of the compaction train. The test point evaluation shall be performed in accordance with instructions from the Engineer. The number of passes with an approved compaction train, required to attain the maximum test point density, shall be used on all subsequent paving.

HMA for preleveling shall be thoroughly compacted. HMA that is used to prelevel wheel ruts shall be compacted with a pneumatic tire roller unless otherwise approved by the Engineer.

5-04.3(10)D2 HMA Compaction Nonstatistical Evaluation – Acceptance Testing

The location of the HMA compaction acceptance tests will be randomly selected by the Engineer from within each sublot, with one test per sublot.

5-04.3(10)D3 HMA Nonstatistical Compaction – Price Adjustments

For each compaction lot with one or two sublots, having all sublots attain a relative density that is 92 percent of the reference maximum density the HMA shall be accepted at the unit Contract price with no further evaluation. When a sublot does not attain a relative density that is 92 percent of the reference maximum density, the lot shall be evaluated in accordance with Section 1-06.2 to determine the appropriate CPF. The maximum CPF shall be 1.00, however, lots with a calculated CPF in excess of 1.00 will be used to offset lots with CPF values below 1.00 but greater than 0.90. Lots with CPF lower than 0.90 will be evaluated for compliance per 5-04.3(11). Additional testing by either a nuclear moisture-density gauge or cores will be completed as required to provide a minimum of three tests for evaluation.

For compaction below the required 92%, a Non-Conforming Compaction Factor (NCCF) will be determined. The NCCF equals the algebraic difference of CPF minus 1.00 multiplied by 40 percent. The Compaction Price Adjustment will be calculated as the product of CPF, the quantity of HMA in the compaction control lot in tons, and the unit Contract price per ton of mix.

5-04.3(11) Reject Work

5-04.3(11)A Reject Work General

Work that is defective or does not conform to Contract requirements shall be rejected. The Contractor may propose, in writing, alternatives to removal and replacement of rejected material. Acceptability of such alternative proposals will be determined at the sole discretion of the Engineer. HMA that has been rejected is subject to the requirements in Section 1-06.2(2) and this specification, and the Contractor shall submit a corrective action proposal to the Engineer for approval.

5-04.3(11)B Rejection by Contractor

The Contractor may, prior to sampling, elect to remove any defective material and replace it with new material. Any such new material will be sampled, tested, and evaluated for acceptance.

5-04.3(11)C Rejection Without Testing (Mixture or Compaction)

The Engineer may, without sampling, reject any batch, load, or section of Roadway that appears defective. Material rejected before placement shall not be incorporated into the pavement. Any rejected section of Roadway shall be removed.

No payment will be made for the rejected materials or the removal of the materials unless the Contractor requests that the rejected material be tested. If the Contractor elects to have the rejected material tested, a minimum of three representative samples will be obtained and tested. Acceptance of rejected material will be based on conformance with the nonstatistical acceptance Specification. If the CPF for the rejected material is less than 0.75, no payment will be made for the rejected material; in addition, the cost of sampling and testing shall be borne by the Contractor. If the CPF is greater than or equal to 0.75, the cost of sampling and testing will be borne by the Contracting Agency. If the material is rejected before placement and the CPF is greater than or equal to 0.75, compensation for the rejected material will be at a CPF of 0.75. If rejection occurs after placement and the CPF is greater than or equal to 0.75, compensation for the rejected material will be at the calculated CPF with an addition of 25 percent of the unit Contract price added for the cost of removal and disposal.

5-04.3(11)D Rejection - A Partial Sublot

In addition to the random acceptance sampling and testing, the Engineer may also isolate from a normal sublot any material that is suspected of being defective in relative density, gradation or asphalt binder content. Such isolated material will not include an original sample location. A minimum of three random samples of the suspect material will be obtained and tested. The material will then be statistically evaluated as an independent lot in accordance with Section 1-06.2(2).

5-04.3(11)E Rejection - An Entire Sublot

An entire sublot that is suspected of being defective may be rejected. When a sublot is rejected a minimum of two additional random samples from this sublot will be obtained. These additional samples and the original sublot will be evaluated as an independent lot in accordance with Section 1-06.2(2).

5-04.3(11)F Rejection - A Lot in Progress

The Contractor shall shut down operations and shall not resume HMA placement until such time as the Engineer is satisfied that material conforming to the Specifications can be produced:

1. When the CPF of a lot in progress drops below 1.00 and the Contractor is taking no corrective action, or
2. When the Pay Factor (PF) for any constituent of a lot in progress drops below 0.95 and the Contractor is taking no corrective action, or
3. When either the PF for any constituent or the CPF of a lot in progress is less than 0.75.

5-04.3(11)G Rejection - An Entire Lot (Mixture or Compaction)

An entire lot with a CPF of less than 0.75 will be rejected.

5-04.3(12) Joints

5-04.3(12)A HMA Joints

5-04.3(12)A1 Transverse Joints

The Contractor shall conduct operations such that the placing of the top or wearing course is a continuous operation or as close to continuous as possible. Unscheduled transverse joints will be allowed, and the roller may pass over the unprotected end of the freshly placed mixture only when the placement of the course must be discontinued for such a length of time that the mixture will cool below compaction temperature. When the Work is resumed, the previously compacted mixture shall be cut back to produce a slightly beveled edge for the full thickness of the course.

A temporary wedge of HMA constructed on a 20H:1V shall be constructed where a transverse joint as a result of paving or planing is open to traffic. The HMA in the temporary wedge shall be separated from the permanent HMA by strips of heavy wrapping paper or other methods approved by the Engineer. The wrapping paper shall be removed and the joint trimmed to a slightly beveled edge for the full thickness of the course prior to resumption of paving.

The material that is cut away shall be wasted and new mix shall be placed against the cut. Rollers or tamping irons shall be used to seal the joint.

5-04.3(12)A2 Longitudinal Joints

The longitudinal joint in any one course shall be offset from the course immediately below by not more than 6 inches nor less than 2 inches. All longitudinal joints constructed in the wearing course shall be located at a lane line or an edge line of the Traveled Way. A notched wedge joint shall be constructed along all longitudinal joints in the wearing surface of new HMA unless otherwise approved by the Engineer. The notched wedge joint shall have a vertical edge of not less than the maximum aggregate size or more than ½ of the compacted lift thickness and then taper down on a slope not steeper than 4H:1V. The sloped portion of the HMA notched wedge joint shall be uniformly compacted.

5-04.3(12)B Bridge Paving Joint Seals

Bridge Paving Joint Seals shall be in accordance with Section 5-03.

5-04.3(13) Surface Smoothness

The completed surface of all courses shall be of uniform texture, smooth, uniform as to crown and grade, and free from defects of all kinds. The completed surface of the wearing course shall not vary more than ⅛ inch from the lower edge of a 10-foot straightedge placed on the surface parallel to the centerline. The transverse slope of the completed surface of the wearing course shall vary not more than ¼ inch in 10 feet from the rate of transverse slope shown in the Plans.

When deviations in excess of the above tolerances are found that result from a high place in the HMA, the pavement surface shall be corrected by one of the following methods:

1. Removal of material from high places by grinding with an approved grinding machine, or

2. Removal and replacement of the wearing course of HMA, or

3. By other method approved by the Engineer.

Correction of defects shall be carried out until there are no deviations anywhere greater than the allowable tolerances.

Deviations in excess of the above tolerances that result from a low place in the HMA and deviations resulting from a high place where corrective action, in the opinion of the Engineer, will not produce satisfactory results will be accepted with a price adjustment. The Engineer shall deduct from monies due or that may become due to the Contractor the sum of $1500.00

for each and every section of single traffic lane 100 feet in length in which any excessive deviations described above are found.

When utility appurtenances such as manhole covers and valve boxes are located in the traveled way, the utility appurtenances shall be adjusted to the finished grade prior to paving. This requirement may be waived when requested by the Contractor, at the discretion of the Engineer or when the adjustment details provided in the project plan or specifications call for utility appurtenance adjustments after the completion of paving.

Utility appurtenance adjustment discussions will be included in the Pre-Paving and Pre-Planing Briefing (5-04.3(14)B3). Submit a written request to waive this requirement to the Engineer prior to the start of paving.

5-04.3(14) Planing (Milling) Bituminous Pavement

The planing plan must be approved by the Engineer and a pre-planing meeting must be held prior to the start of any planing. See Section 5-04.3(14)B2 for information on planing submittals.

Where planing an existing pavement is specified in the Contract, the Contractor must remove existing surfacing material and to reshape the surface to remove irregularities. The finished product must be a prepared surface acceptable for receiving an HMA overlay.

Use the cold milling method for planing unless otherwise specified in the Contract. Do not use the planer on the final wearing course of new HMA.

Conduct planing operations in a manner that does not tear, break, burn, or otherwise damage the surface which is to remain. The finished planed surface must be slightly grooved or roughened and must be free from gouges, deep grooves, ridges, or other imperfections. The Contractor must repair any damage to the surface by the Contractor’s planing equipment, using an Engineer approved method.

Repair or replace any metal castings and other surface improvements damaged by planing, as determined by the Engineer.

A tapered wedge cut must be planed longitudinally along curb lines sufficient to provide a minimum of 4 inches of curb reveal after placement and compaction of the final wearing course. The dimensions of the wedge must be as shown on the Drawings or as specified by the Engineer.

A tapered wedge cut must also be made at transitions to adjoining pavement surfaces (meet lines) where butt joints are shown on the Drawings. Cut butt joints in a straight line with

vertical faces 2 inches or more in height, producing a smooth transition to the existing adjoining pavement.

After planing is complete, planed surfaces must be swept, cleaned, and if required by the Contract, patched and preleveled.

The Engineer may direct additional depth planing. Before performing this additional depth planing, the Contractor must conduct a hidden metal in pavement detection survey as specified in Section 5-04.3(14)A.

5-04.3(14)A Pre-Planing Metal Detection Check

Before starting planing of pavements, and before any additional depth planing required by the Engineer, the Contractor must conduct a physical survey of existing pavement to be planed with equipment that can identify hidden metal objects.

Should such metal be identified, promptly notify the Engineer.

See Section 1-07.16(1) regarding the protection of survey monumentation that may be hidden in pavement.

The Contractor is solely responsible for any damage to equipment resulting from the Contractor's failure to conduct a pre-planing metal detection survey, or from the Contractor's failure to notify the Engineer of any hidden metal that is detected.

5-04.3(14)B Paving and Planing Under Traffic

5-04.3(14)B1 General

In addition, the requirements of Section 1-07.23 and the traffic controls required in Section 1-10, and unless the Contract specifies otherwise or the Engineer approves, the Contractor must comply with the following:

1. Intersections:

    a. Keep intersections open to traffic at all times, except when paving or planing operations through an intersection requires closure. Such closure must be kept to the minimum time required to place and compact the HMA mixture, or plane as appropriate. For paving, schedule such closure to individual lanes or portions thereof that allows the traffic volumes and schedule of traffic volumes required in the approved traffic control plan. Schedule work so that adjacent intersections are not impacted at the same time and comply with the traffic control restrictions required by the Traffic Engineer. Each individual intersection closure or partial closure must

be addressed in the traffic control plan, which must be submitted to and accepted by the Engineer, see Section 1-10.2(2).

b. When planing or paving and related construction must occur in an intersection, consider scheduling and sequencing such work into quarters of the intersection, or half or more of an intersection with side street detours. Be prepared to sequence the work to individual lanes or portions thereof.

c. Should closure of the intersection in its entirety be necessary, and no trolley service is impacted, keep such closure to the minimum time required to place and compact the HMA mixture, plane, remove asphalt, tack coat, and as needed.

d. Any work in an intersection requires advance warning in both signage and a number of Working Days advance notice as determined by the Engineer, to alert traffic and emergency services of the intersection closure or partial closure.

e. Allow new compacted HMA asphalt to cool to ambient temperature before any traffic is allowed on it. Traffic is not allowed on newly placed asphalt until approval has been obtained from the Engineer.

2. Temporary centerline marking, post-paving temporary marking, temporary stop bars, and maintaining temporary pavement marking must comply with Section 8-23.

3. Permanent pavement marking must comply with Section 8-22.

5-04.3(14)B2 Submittals - Planing Plan and HMA Paving Plan

The Contractor must submit a separate planing plan and a separate paving plan to the Engineer at least 5 Working Days in advance of each operation's activity start date. These plans must show how the moving operation and traffic control are coordinated, as they will be discussed at the pre-planing briefing and pre-paving briefing. When requested by the Engineer, the Contractor must provide each operation's traffic control plan on 24 x 36 inch or larger size Shop Drawings with a scale showing both the area of operation and sufficient detail of traffic beyond the area of operation where detour traffic may be required. The scale on the Shop Drawings is 1 inch = 20 feet, which may be changed if the Engineer agrees sufficient detail is shown.

The planing operation and the paving operation include, but are not limited to, metal detection, removal of asphalt and temporary asphalt of any kind, tack coat and drying, staging of supply trucks, paving trains, rolling, scheduling, and as may be discussed at the briefing.

When intersections will be partially or totally blocked, provide adequately sized and noticeable signage alerting traffic of closures to come, a minimum 2 Working Days in advance. The traffic control plan must show where police officers will be stationed when signalization is or may be, countermanded, and show areas where flaggers are proposed.

At a minimum, the planing and the paving plan must include:

1. A copy of the accepted traffic control plan, see Section 1-10.2(2), detailing each day's traffic control as it relates to the specific requirements of that day's planing and paving. Briefly describe the sequencing of traffic control consistent with the proposed planing and paving sequence, and scheduling of placement of temporary pavement markings and channelizing devices after each day's planing, and paving.

2. A copy of each intersection's traffic control plan.

3. Haul routes from supplier facilities, and locations of temporary parking and staging areas, including return routes. Describe the complete round trip as it relates to the sequencing of paving operations.

4. Names and locations of HMA supplier facilities to be used.

5. List of all equipment to be used for paving.

6. List of personnel and associated job classification assigned to each piece of paving equipment.

7. Description (geometric or narrative) of the scheduled sequence of planing and of paving and intended area of planing and of paving for each day's work, must include the directions of proposed planing and of proposed paving, sequence of adjacent lane paving, sequence of skipped lane paving, intersection planing and paving scheduling and sequencing, and proposed notifications and coordinations to be timely made. The plan must show HMA joints relative to the final pavement marking lane lines.

8. Names, job titles, and contact information for field, office, and plant supervisory personnel.

9. A copy of the approved Mix Designs.

10. Tonnage of HMA to be placed each day.

11. Approximate times and days for starting and ending daily operations.

5-04.3(14)B3 Pre-Paving and Pre-Planing Briefing

At least 2 Working Days before the first paving operation and the first planing operation, or as scheduled by the Engineer for future paving and planing operations to ensure the Contractor has adequately prepared for notifying and coordinating as required in the Contract, the Contractor must be prepared to discuss that day's operations as they relate to other entities and to public safety and convenience, including driveway and business access, garbage truck operations, transit operations and working around energized overhead wires, school and nursing home and hospital and other accesses, other Contractors who may be operating in the area, pedestrian and bicycle traffic, and emergency services. The Contractor, and Subcontractors that may be part of that day's operations, must meet with the Engineer and discuss the proposed operation as it relates to the submitted planing plan and paving plan, approved traffic control plan, and public convenience and safety. Such discussion includes, but is not limited to:

1. General for both the Paving and Planing:

   a. The actual times of starting and ending daily operations.

   b. In intersections, how to break up the intersection, and address traffic control and signalization for that operation, including use of peace officers.

   c. The sequencing and scheduling of paving operations and of planing operations, as applicable, as it relates to traffic control, public convenience and safety, and other Contractors who may operate in the Project limits.

   d. Notifications required of Contractor activities and coordinating with other entities and the public as necessary.

   e. Description of the sequencing of installation and types of temporary pavement markings as it relates to planing and paving.

   f. Description of the sequencing of installation of, and the removal of, temporary pavement patch material around exposed castings and as may be needed.

   g. Description of procedures and equipment to identify hidden metal in the pavement, such as survey monumentation, monitoring wells, streetcar rail, and castings, before planing as per Section 5-04.3(14)B2.

   h. Description of how flaggers will be coordinated with the planing, paving, and related operations.

i. Description of sequencing of traffic controls for the process of rigid pavement base repairs.

j. Other items the Engineer deems necessary to address.

2. Paving – additional topics:

a. When to start applying tack and coordinating with paving.

b. Types of equipment and numbers of each type of equipment to be used. If more pieces of equipment than personnel are proposed, describe the sequencing of the personnel operating the types of equipment. Discuss the continuance of operator personnel for each type of equipment as it relates to meeting Specification requirements.

c. Number of JMFs to be placed, and if more than one JMF is used, how the Contractor will ensure different JMFs are distinguished, how pavers and how MTVs are distinguished, and how pavers and MTVs are cleaned so that one JMF does not adversely influence the other JMF.

d. Description of contingency plans for that day's operations such as equipment breakdown, rain out, and supplier shutdown of operations.

e. Number of sublots to be placed, sequencing of density testing, and other sampling and testing.

5-04.3(15) Sealing Pavement Surfaces

Apply a fog seal where shown in the plans. Construct the fog seal in accordance with Section 5-02.3. Unless otherwise approved by the Engineer, apply the fog seal prior to opening to traffic.

5-04.3(16) HMA Road Approaches

Construct HMA approaches at the locations shown in the Plans or where staked by the Engineer, in accordance with Section 5-04.

5-04.4 Measurement

HMA Cl. ___ PG ___, HMA for ___ Cl. ___ PG ___, and Commercial HMA will be measured by the ton in accordance with Section 1-09.2, with no deduction being made for the weight of asphalt binder, mineral filler, or any other component of the mixture. If the Contractor elects to remove and replace mix as allowed by Section 5-04.3(11), the material removed will not be measured.

Roadway cores will be measured per each for the number of cores taken.

Pavement repair excavation will be measured by the square yard of surface marked prior to excavation.

Planing bituminous pavement will be measured by the square yard.

5-04.5 Payment

Payment will be made for each of the following Bid items that are included in the Proposal:

"HMA Cl. ___ PG ___", per ton.
"HMA for Approach Cl. ___ PG ___", per ton.
"HMA for Preleveling Cl. ___ PG ___", per ton.
"HMA for Pavement Repair Cl. ___ PG ___", per ton.
"Commercial HMA", per ton.
The unit Contract price per ton for "HMA Cl. ___ PG ___", "HMA for Approach Cl. ___ PG ___", "HMA for Preleveling Cl. ___ PG ___", "HMA for Pavement Repair Cl. ___ PG ___", and "Commercial HMA" shall be full compensation for all costs, including anti-stripping additive, incurred to carry out the requirements of Section 5-04 except for those costs included in other items which are included in this Subsection and which are included in the Proposal.

"Pavement Repair Excavation Incl. Haul", per square yard.
The unit Contract price per square yard for "Pavement Repair Excavation Incl. Haul" shall be full payment for all costs incurred to perform the Work described in Section 5-04.3(4) with the exception, however, that all costs involved in the placement of HMA shall be included in the unit Contract price per ton for "HMA for Pavement Repair Cl. ___ PG ___", per ton.

"Planing Bituminous Pavement", per square yard.
The unit Contract price per square yard for "Planing Bituminous Pavement" shall be full payment for all costs incurred to perform the Work described in Section 5-04.3(14).

"Job Mix Compliance Price Adjustment", by calculation.
"Job Mix Compliance Price Adjustment" will be calculated and paid for as described in Section 5-04.3(9)C6.

"Compaction Price Adjustment", by calculation.
"Compaction Price Adjustment" will be calculated and paid for as described in Section 5-04.3(10)D3.

"Roadway Core", per each.
The Contractor's costs for all Work associated with the coring (e.g., traffic control) shall be incidental and included in the unit Bid price per each.

“Cyclic Density Price Adjustment”, by calculation.
“Cyclic Density Price Adjustment” will be calculated and paid for as described in Section 5-04.3(10)B.

END OF DIVISION 5

DIVISION 6
STRUCTURES

6-02 CONCRETE STRUCTURES

6-02.2 Materials
(*****)

This section is supplemented with the following: *Supplement*

Resin Bonded Anchor System
Item number 2 of the first paragraph of Section 9-06.4 is revised to read:

(May 5, 2025)
2. Resin Bonding Material
   Resin bonding material shall be a two-component epoxy resin conforming to Type IV ASTM C 881 or be one of the following:

   a. Vinyl ester resin.

   b. Polyester resin.

   c. Methacrylate resin.

6-02.3 Construction Requirements
(*****)

This section is supplemented with the following: *Supplement*

6-02.3(14) Finishing Concrete Surfaces

6-02.3(14)C Pigmented Sealer for Concrete Surfaces
Section 6-02.3(14)C is supplemented with the following:

(April 6, 2009)
The color of the pigmented sealer shall be Washington Gray.

6-02.4 Measurement
(*****)

This section is supplemented with the following: *Supplement*

Moment slabs will be measured by the square yard of finished surface. Width is measured horizontally between the outside edges of the moment slab. The vertical height of the curb is not included in the width measurement. Length is measured at the base of the curb along the grade.

6-02.5 Payment
(*****)

This section is supplemented with the following: *Supplement*

"Moment Slab", per square yard.

The Contract price for "Moment Slab" shall include all costs of concrete, reinforcement, forming, joints, surface finishes, and all other work necessary to construct a complete moment slab.

6-06 BRIDGE RAILINGS

6-06.1 Description
(*****)

This section is supplemented with the following: *Supplement*

This work also consists of constructing various types of steel railing according to the locations and details shown on the Plans, these Specifications and the Engineer.

6-06.3 Construction Requirements
(*****)

This section is supplemented with the following: *Supplement*

Railing on this project shall be considered metal railings.

6-06.3(2) Metal Railings
The second sentence of the first paragraph is replaced with the following:

Railing shall be made of galvanized steel and painted in accordance with Section 6-07.

The first sentence of the second paragraph of Section 6-06.3(2) is replaced with the following:

Before fabricating the railing, the Contractor shall submit Type 2 Working Drawings consisting of a single submittal containing all railing of the shop plans indicating all materials, details, connections, welding, splices, hardware, anchors, epoxy, galvanizing, painting, notes and all other information required for fabrication and construction of each railing type.

6-06.5 Payment
(*****)

This section is supplemented with the following: *Supplement*

"Railing Type 1", per linear foot.
"Railing Type 2", per linear foot.
"Railing Type 3", per linear foot.
"Railing Type 4", per linear foot.

The Contract price for "Railing Type ___" shall include all costs to fabricate, furnish and install the railing, including railing members, welding, splices, hardware, anchors, epoxy, galvanizing, painting, grout pads, and all other work necessary to construct complete runs of railing.

6-07 PAINTING

6-07.3 Construction Requirements

6-07.3(*11*) *Painting or Powder Coating Galvanized Surfaces*
(*****)

This section is supplemented with the following: *Supplement*

(August 3, 2009)
The color of the finish coat, when dry, shall match *** AMS-STD-595 color number 17038 (Gloss Black) ***.

6-11 REINFORCED CONCRETE WALLS

6-11.1 Description

(*****)

This section is supplemented with the following: *Supplement*

This work also consists of constructing reinforced concrete columns integral with reinforced concrete walls as shown on the Plans.

6-11.5 Payment

(*****)

This section is supplemented with the following: *Supplement*

"Reinforced Concrete Wall 1", per square foot.

"Reinforced Concrete Wall 2", per square foot.

The Contract price for "Reinforced Concrete Wall ___" shall include all costs to construct the reinforced concrete walls and columns, including concrete, steel reinforcement, forming, joints, architectural finish, pigmented sealer, caps, excavation, backfill, wall drains, wall drain cleanouts, and all other work necessary to construct complete walls.

Shoring or Extra Excavation Cl. A, Crushed Surfacing Top Course, and Railing Type ___ will be paid separately.

6-13 STRUCTURAL EARTH WALLS

6-13.2 Materials

(*****)

This section is supplemented with the following: *Supplement*

Lightweight Fill

Provide expanded polystyrene (EPS) "Geofoam" according to D6817, with the following physical properties:

Maximum Density	3.0 pounds per square foot	(ASTM D1622)
Minimum Compressive Strength at 1% deformation	5.8 pounds per square inch	(ASTM D1621)
Minimum Flexural Strength	30.0 pounds per square inch	(ASTM C203)
Flammability (Oxygen Index)	24.0%	(ASTM D2863)

EPS comes in a variety of sizes, however, is typically supplied as right rectangular prismoid blocks with nominal dimensions of 2 feet x 4 feet x 8 feet. Blocks shall be smooth and flat and have a dimensional tolerance of plus or minus 0.5%. Blocks with surface damage of 20% or more to a side area, or volume damage of 1% or more may be rejected.

(February 6, 2023)

Precast Concrete Panel Faced Structural Earth Wall Materials

General Materials

Concrete Leveling Pad

Leveling pad concrete shall be commercial concrete in accordance with Section 6-02.3(2)B.

Proprietary Materials

ARES Modular Panel Wall System

Tensar Geogrid Materials

Geogrid reinforcement shall conform to Section 9-33.1 and shall be a product listed in Appendix D of the current WSDOT Qualified Products List (QPL). The values of T_{al} and T_{ult} as listed in the QPL for the products used shall meet or exceed the values required for the wall manufacturer's reinforcement design as specified in the structural earth wall design calculation and working drawing submittal.

The minimum ultimate tensile strength of the geogrid shall be a minimum average roll value (the average test results for any sampled roll in a lot shall meet or exceed the values shown in Appendix D of the current WSDOT QPL). The strength shall be determined in accordance with ASTM D6637 for multi-rib specimens.

The ultraviolet (UV) radiation stability, in accordance with ASTM D4355, shall be a minimum of 70 percent strength retained after 500 hours in the weatherometer.

The longitudinal (i.e., in the direction of loading) and transverse (i.e., parallel to the wall or slope face) ribs that make up the geogrid shall be perpendicular to one another. The maximum deviation of the cross-rib from being perpendicular to the longitudinal rib (skew) shall be no more than 1 inch in 5 feet of geogrid width. The maximum deviation of the cross-rib at any point from a line perpendicular to the longitudinal ribs located at the cross-rib (bow) shall be 0.5 inches.

The Engineer will take random samples of the geogrid materials at the job site. Approval of the geogrid materials will be based on testing of samples from each lot. A "lot" shall be defined as all geogrid rolls sent to the project site produced by the same manufacturer during a continuous period of production at the same manufacturing plant having the same product name. The Contracting Agency will require 14 calendar days maximum for testing the

samples after their arrival at the WSDOT Materials Laboratory in Tumwater, WA.

The geogrid samples will be tested for conformance to the specified material properties. If the test results indicate that the geogrid lot does not meet the specified properties, the roll or rolls which were samples will be rejected. Two additional rolls for each roll tested which failed from the lot previously tested will then be selected at random by the Engineer for sampling and retesting. If the retesting shows that any of the additional rolls tested do not meet the specified properties, the entire lot will be rejected. If the test results from all the rolls retested meet the specified properties, the entire lot minus the roll(s) which failed will be accepted.

All geogrid materials which have defects, deterioration, or damage, as determined by the Engineer, will be rejected. All rejected geogrid materials shall be replaced at no expense to the Contracting Agency.

Except as otherwise noted, geogrid identification, storage and handling shall conform to the requirements specified in Section 2-12.2. The geogrid materials shall not be exposed to temperatures less than –20F and greater than 122F.

Rubber bearing pads shall be a type and grade as recommended by Tensar Earth Technologies, Inc.

Geosynthetic joint cover for all horizontal and vertical joints shall be a non-woven geosynthetic as recommended by Tensar Earth Technologies, Inc. Adhesive used to attach the geosynthetic to the rear of the precast concrete facing panel shall be as recommended by Tensar Earth Technologies, Inc.

Reinforced Earth Wall

Reinforcing strips shall be shop fabricated from hot rolled steel conforming to ASTM A572 Grade 65 or approved equal and shall be galvanized after fabrication in accordance with AASHTO M 111. Damage to the galvanizing shall be repaired with one coat of paint conforming to Section 9-08.1(2)B.

Bolts and nuts shall conform to Section 9-06.5(3) and shall be galvanized in accordance with ASTM F2329.

Rubber bearing pads shall be a type and grade as recommended by the Reinforced Earth Company.

Vertical joint filler between panels, when specified in the structural earth wall working drawings, shall be two-inch square, flexible open cell polyether foam strips, Grade UU-34, as recommended by the Reinforced Earth Company.

Filter fabric joint cover for all horizontal and vertical joints, when specified in the structural earth wall working drawings, shall be a pervious woven polypropylene filter fabric as recommended by the Reinforced Earth Company. Adhesive used to attach the fabric material to the rear of the precast concrete facing panel shall be as recommended by the Reinforced Earth Company.

MSE Plus Wall
Pins connecting the soil reinforcing mesh to the precast concrete panels shall conform to AASHTO M 336, plain wire, and shall be galvanized after fabrication in accordance with AASHTO M 111. Damage to the galvanizing shall be repaired with one coat of paint conforming to Section 9-08.1(2)B.

Bearing pads shall be serrated high-density polyethylene (HDPE) copolymer pads as recommended by SSL, LLC.

Filter fabric joint cover for all horizontal and vertical joints shall be non-woven geosynthetic conforming to AASHTO M 288. Adhesive used to bond the geosynthetic to the rear of the precast concrete facing panel shall be as recommended by SSL, LLC.

6-13.3 Construction Requirements
(*****)

This section is supplemented with the following: *Supplement*

Lightweight Fill
EPS shall be constructed so that blocks fit together tightly and in such a way to avoid continuous vertical discontinuities by offsetting the joints between overlying blocks. Placing blocks in a "running bond" and rotating the pattern by 90 degrees in each successive layer is recommended to accomplish this. In cases where this is not possible due to physical obstructions, the Contractor shall indicate the alternate layout proposed in the wall submittal.

Where irregular shapes are required, the blocks may be trimmed in the field using a "hot-wire" cutting device (NiCr wire held between insulated handles and connected to a power source by a rheostat). The Contractor shall submit other options for cutting blocks to the Engineer for approval.

Protect blocks from damage at all times during construction. To avoid damage, only personnel and small, rubber-tired equipment shall operate directly on the blocks.

(January 10, 2022)
Precast Concrete Panel Faced Structural Earth Wall
Precast concrete panel faced structural earth walls shall be constructed of only one of the following wall systems. The Contractor shall make arrangements to purchase the precast concrete panels, soil reinforcement, attachment devices, joint filler, and all necessary incidentals from the source identified with each wall system:

ARES Modular Panel Wall System
ARES Modular Panel Wall System is a registered trademark of Tensar Corporation

Tensar Corporation
2500 Northwinds Parkway Suite 500
Atlanta, GA 30009
(770) 344-2090
FAX (678) 281-8546
www.tensarcorp.com

MSE Plus Wall
MSE Plus Wall is a registered trademark of SSL, LLC

SSL, LLC
4740 Scotts Valley Drive Suite E
Scotts Valley, CA 95066
(831) 430-9300
FAX (831) 430-9340
www.mseplus.com

Reinforced Earth Wall
Reinforced Earth is a registered trademark of the Reinforced Earth Company.

The Reinforced Earth Company
9025 East Kenyon Ave. Suite 200
Denver, CO 80237
(303) 790-1481
FAX (303) 790-1461
www.reinforcedearth.com

6-13.3(2) Submittals
(*****)

Section 6-13.3(2) is supplemented with the following: *Supplement*

(January 3, 2011)
The following geotechnical design parameters shall be used for the design of the structural earth wall:

Wall Name or No.: *** Structural Earth Wall 3 ***

Soil Properties	Wall Backfill	Retained Soil	Foundation Soil

Unit Weight (pcf)	*** 135 ***	*** 130 ***	*** 130 ***
Friction Angle (deg)	*** 36 ***	*** 33 ***	*** 33 ***
Cohesion (psf)	*** 0 ***	*** 0 ***	*** 0 ***

For the Service Limit State, the wall shall be designed to accommodate a differential settlement of *** ¾-inch *** per 100 feet of wall length.

For the Extreme Event I Limit State, the wall shall be designed for a horizontal seismic acceleration coefficient k_h of *** 0.247 *** g and a vertical seismic acceleration coefficient k_v of *** 0.0 *** g.

The Contractor shall account for lightweight fill in the wall design and submittal consistent with the approved lightweight fill material. Design calculations and drawings shall clearly indicate limits of lightweight fill.

6-13.3(4) Precast Concrete Facing Panel and Concrete Block Fabrication
(*****)

Section 6-13.3(4) is supplemented with the following: *Supplement*

(April 3, 2017)
Specific Fabrication Requirements for Precast Concrete Panel Faced Structural Earth Walls

ARES Modular Panel Wall System

The concrete mix for precast concrete facing panels shall be a Contractor mix design in accordance with Section 6-02.3(2)A, producing a minimum compressive strength at 28 days of 4,500 psi. The Contractor mix design for precast concrete facing panels shall not include Type III cement unless otherwise allowed by the Engineer.

6-13.5 Payment
(*****)

This section is supplemented with the following: *Supplement*

"Structural Earth Wall 3," per square foot.

The square foot Contract price for "Structural Earth Wall 3," shall be full pay for all costs in connection with furnishing all materials, labor, tools, and equipment necessary for the contractor design, including working drawings and supporting calculations; manufacture; fabrication; transportation; and erection, including, but not limited to, structural earth wall system, structure excavation, gravel backfill, lightweight backfill (EPS "Geofoam"), construction geotextile, soil reinforcement, wall drains, leveling pads, pigmented sealer, joints, backer rod, sealant, building

permit for wall and railing, and all other work necessary for an approved and complete wall system.

Shoring or Extra Excavation Cl. A and Railing Type ___ will be paid separately.

END OF DIVISION 6

DIVISION 7
DRAINAGE STRUCTURES, STORM SEWERS, SANITARY SEWERS, WATER MAINS, AND CONDUITS

7-01 DRAINS

7-01.5 Payment

(*****)

This section is supplemented with the following: *Supplement*

Drains, underdrains, and cleanouts for retaining walls shall be considered incidental to and included in the various bid items in the contract, unless otherwise specified in the Proposal.

7-04 STORM SEWERS

7-04.2 Materials

(*****)

This section is supplemented with the following: *Supplement*

Ductile Iron Sewer Pipe	9-05.13

7-04.5 Payment

(*****)

This section is supplemented with the following: *Supplement*

The unit contract price per linear foot for storm sewer pipe of the kind and size specified shall be full pay for all work to complete the installation including the following:

- Furnishing and installing pipe, pipe fittings, and other pipe appurtenances.
- Adjusting inverts to manholes and catch basins
- Testing of pipes
- Trenching
- Structure Excavation Class B (including haul)
- Installing bedding and backfill materials within the trench
- Disposal of surplus trench excavation
- General pipe installation work including plugs and connections
- Cleanup

Ethafoam pads and other methods employed when laying pipe in close proximity to existing utilities, per section 7-08, shall be considered incidental to installation of storm drainage pipe.

Native material shall be used as backfill above pipe zone bedding unless the native material is deemed unsuitable for use by the Engineer.

"Ductile Iron Storm Sewer Pipe ____ In. Diam.", per linear foot.

7-05 MANHOLES, INLETS, CATCH BASINS, AND DRYWELLS

7-05.1 Description
(*****)

This section is supplemented with the following: *Supplement*

Work also includes adjusting existing utility boxes to finished grade, including manhole covers, junction boxes, and all utilities as noted in the Plans.

7-05.3 Construction Requirements

7-05.3(1) Adjusting Manholes and Catch Basins to Grade
(*****)

This section is supplemented with the following: *Supplement*

All manholes and catch basins shall be adjusted to grade after paving operations are complete. The Contractor shall adjust the manholes with concrete adjusting rings, brick and mortar in accordance with the Standard Specifications.

Where manhole or catch basin lids fall within the sidewalk and curb ramps, the cover shall be replaced with a slip-resistant cover having a slip-resistant coating meeting ADA standards.

7-05.3(1)A Adjusting Utility Cover to Grade
(*****)

This section is added as follows: *New Section*

Where utility covers fall within the sidewalk, driveway entrances, and curb ramps, the cover shall be replaced with a slip-resistant cover coated with a slip-resistant coating, meeting ADA standards.

Adjustments of valve box castings shall be made in the same manner as for manholes.

7-05.4 Measurement
(*****)

This section is supplemented with the following: *Supplement*

No separate measurement will be made for structure excavation.

No separate measurement will be made for connection to drainage system.

Adjust Utility Cover will be measured per each.

7-05.5 Payment
(*****)

This section is supplemented with the following: *Supplement*

All costs for dewatering, and Structure Excavation for drainage structure in accordance with all provisions of Section 2-09 (Structure Excavation) shall be included in the unit contract price for the structure installed, and no other payment will be made.

All costs for connection to drainage system shall be considered as incidental to the unit contract price for the structure installed.

"Adjust Utility Cover", per each.

The unit contract price per each for "Adjust Utility Cover" shall be full compensation for all labor, materials, tools and equipment necessary to complete the work including furnishing and installing solid locking lid or cover where noted in the Plans, meeting slip-resistant ADA standards, and rotating covers to align and accommodate curbs and new improvements as necessary.

"12" Catch Basin with Decorative Grate" will be measured and paid per each for all tools, materials, labor, and supplies required to complete the installation. Unless listed as a separate pay item, all materials, labor, equipment, and incidentals necessary to install catch basins and inlets shall be included in these pay items.

7-08 GENERAL PIPE INSTALLATION REQUIREMENTS

7-08.3 Construction Requirements

7-08.3(2)A Pipe Laying – General
(*****)

This section is supplemented with the following: *Supplement*

For pipe diameters 18" and under, including any affected catch basins, inlets or manholes, the Engineer reserves the right to deviate up to 18-inches in any direction from the plan elevation or location without any adjustment in the unit price or any additional compensation to the Contractor.

7-08.3(2)B Pipe Laying – General
(*****)

This section is supplemented with the following: *Supplement*

Contractor shall install an Ethafoam pad in pipe installations where other utilities are closer than 12-inches to provide additional protection between the adjacent utilities. The size of the pad shall be based on the outside diameter (O.D.) of the larger crossing pipe. The pad shall be O.D. long by O.D. wide by 2.5 inches thick minimum or as required to protect the pipes. The pad shall be a strong, resilient, medium-density, closed-cell, polyethylene foam plank (Dow Ethafoam 220, or accepted equivalent).

7-08.4 Measurement
(*****)

This section is supplemented with the following: *Supplement*

No separate measurement will be made for pipe zone bedding.

No separate measurement will be made for trench backfill.

No separate measurement will be made for structure excavation.

7-08.5 Payment
(*****)

This section is supplemented with the following: *Supplement*

All costs for Gravel Backfill for Pipe Zone bedding shall be included in the linear foot unit price for the type and size of pipe and no separate payment will be made.

All costs for Structure Excavation for pipe trenching in accordance with all provisions of Section 2-09 (Structure Excavation) shall be included in the unit contract price for the type and size pipe installed, and no separate payment will be made.

All costs for trench backfill shall be included in the linear foot unit price for the type and size of pipe installed.

END OF DIVISION 7

DIVISION 8
MISCELLANEOUS

8-01 EROSION CONTROL AND WATER POLLUTION CONTROL

8-01.1 Description
(*****)

This section is supplemented with the following: *Supplement*

Work shall include installation of temporary erosion control devices including, but not limited to, filter fabric fence, inlet protection, and providing for street cleaning to prevent the transport of sediment and other debris from leaving the site.

Water
The Contractor shall make, at the Contractor's expense, whatever arrangements may be necessary to ensure an adequate supply of water required for erosion control, plant establishment, and recommended watering by Engineer to maintain health of procured plants on site, installed, and in decline.

The Contractor shall also furnish all necessary hose, equipment, attachments, and accessories for the adequate irrigation of planted areas as may be required to complete the work as specified. All costs shall be considered **incidental** to and included in the bid items involved and no additional compensation shall be made.

8-02 ROADSIDE RESTORATION

8-02.1 Description
(*****)

This section is supplemented with the following: *Supplement*

This work also includes constructing Tree Planting with Tree Grate at the locations shown on the Plan, in accordance with the Plans and Specifications.

This section also describes requirements for documenting pre-construction conditions within the Temporary Construction Easement (TCE) Area and for restoring the TCE Area to its pre-construction condition upon completion of construction activities.

8-02.2 Materials
(*****)

This section is modified as follows: *Modification*

8-02.2 (1) Landscape Mulch

Mulch shall conform to the material description in Section 9-14.5(4) of these Special Provisions.

8-02.2 (2) Tree Grates

Tree grates shall match the tree grates used along 236th St North of the project site in material and visual design. Tree grates shall be in accordance with the Plans and the following:

- Rain 60 x 60 by Iron Age or approved equal.
    - Cast Iron / Pedestrian Load only
    - Heelproof: No thru openings greater than ¼"
    - Center Opening: Cast at 16" with break out at 18"

8-02.3(1) Responsibility During Construction
(*****)

This section is supplemented with the following: *Supplement*

Throughout planting operations, the Contractor shall keep the premises clean, free of excess soils, plants, and other materials, including refuse and debris, resulting from his work. At the conclusion of work, the Contractor shall remove surplus soils, materials, and debris from the construction site and shall leave project in a clean condition.

Landscape construction is anticipated to begin after all grading, retaining walls curbs, sidewalks, and associated work is completed. Landscape materials shall not be installed until weather permits and installation has been authorized by the Engineer. If water restrictions are in force, planting landscape materials may be delayed.

8-02.3(7) Layout of Planting
(*****)

This section is supplemented with the following: *Supplement*

Planting layout shall be approved by the Engineer prior to planting. Notify the Engineer a minimum of one week before the plant layout is to be complete for specified area in Roadside Work Plan. In advance of planting, the Contractor shall locate plants by placing all trees and plants in the actual locations proposed for planting. For large blocks of groundcover material, the Contractor has the option of staking or clearly painting boundaries of planting rather than placing individual plants. If obstructions are encountered that are not shown on the drawings, do not proceed until the Engineer have approved the locations or selected alternate plant locations.

8-02.3(8) Planting

(*****)

This section is supplemented with the following: *Supplement*

All trees, shrubs, and groundcover shall be planted as detailed on the Plans.

Plant trees upright and face to give best appearance or relationship to adjacent trails and hold rigidly in position until planting soil has been backfilled and tamped firmly around the ball or roots.

Balled and burlapped plants shall be placed in the planting pits with the burlap intact; the binding at the top of the ball shall then be fully removed from the root ball, while backfilling the rootball to support soil mass. Remove all plastic, twine, and ropes. Only the wrapping immediately under the root ball and the plant shall be allowed to remain, if the root ball is cracked or broken during the planting process the plant shall be rejected.

When the pit is backfilled halfway, place the specified quantity of fertilizer plant tablets, unless otherwise specified on the plans. Evenly space the tablets around perimeter of, and immediately adjacent to, the root system at a depth that is between the middle and the bottom of the root system. Do not injure root system. Place and compact planting topsoil carefully to avoid injury to roots; fill all voids.

When pit is three-quarters (3/4) backfilled, completely fill with water, and allow water to infiltrate. Fill pits with additional soil to finish grade and continue backfilling as detailed on plans.

8-02.3(8)C Pruning, Staking, Guying, and Wrapping

(*****)

This section is supplemented with the following: *Supplement*

Stake immediately after planting as indicated in the detail drawings.

8-02.3(17) TCE Area Restoration

(*****)

This section is added as follows: *New Section*

Pre-Construction Documentation

Prior to any construction activities within the TCE, the Contractor shall complete a thorough pre-construction documentation of existing site conditions. Documentation shall be submitted to the Engineer for review and approval no later than 14 calendar days before the start of any work within the TCE.

Pre-construction documentation shall include, at minimum, the following:

Photography and Video

- Photographs shall be taken from consistent, reproducible vantage points throughout the TCE Area and shall capture the full extent of all areas subject to disturbance.
- Video walkthroughs shall be recorded for the full extent of the TCE Area, providing continuous coverage of all ground surfaces, plantings, irrigation components, and site features.
- All photographs and video recordings shall include visible date and time stamps.
- Digital files shall be submitted in a format approved by the Engineer.

Plant Inventory

- The Contractor shall document all existing vegetation within the TCE, including trees, shrubs, groundcover, turf grass, and other plantings.

Irrigation System

- The Contractor shall locate and document all irrigation system components within the TCE.
- Operating pressure and coverage patterns shall be confirmed through a system test conducted in the presence of the Engineer or the property owner's representative prior to the start of construction.
- The Contractor shall document the extent and coverage of each irrigation zone that falls within or adjacent to the TCE.

Mulch

- The type of mulch within the TCE Area shall be documented.
- Photographs shall be taken to document mulch type, size, and color conditions.

Restoration Requirements

Upon completion of construction activities and prior to release of the TCE, the Contractor shall fully restore all areas within the TCE to pre-construction conditions as documented during pre-construction documentation. Restoration shall be completed within the timeframe specified in the Special Provisions or as directed by the Engineer.

Grades

- Finished grade shall be restored to elevations matching pre-construction condition within a tolerance of plus or minus 0.10 feet, unless otherwise approved by the Engineer.
- Restored grades shall provide positive drainage consistent with pre-construction drainage patterns. No ponding or drainage redirection shall result from construction activities.

Topsoil

- Where topsoil has been lost or is insufficient, the Contractor shall supplement with topsoil meeting the requirements of Section 9-14.2(1).
- Restored topsoil shall be free of construction debris, compaction, and contaminants.
- Topsoil shall be decompacted to a minimum depth of 9” prior to replanting.

Mulch

- Mulched areas shall be restored using mulch of the same type as documented during pre-construction documentation, applied to a depth of 3".
- Where the original mulch type is no longer available, a substitute of equivalent type and quality shall be approved in writing by the Engineer prior to installation.
- Mulch shall not be applied directly against plant stems or tree trunks as seen in plan details.

Irrigation System

- The irrigation system shall be fully restored to functioning condition, including all components documented during pre-construction documentation.
- All irrigation system components shall be restored or replaced in kind with components of equal or greater quality and hydraulic performance. Substitutions shall be approved in writing by the Engineer.
- Upon completion of restoration, a full system test shall be conducted in the presence of the Engineer or the property owner's representative to verify that all zones operate as documented in the pre-construction irrigation test.
- The Contractor shall correct any deficiencies in coverage, pressure, or function identified during the post-restoration system test at no additional cost to the Contracting Agency.

Vegetation

- All trees, shrubs, and groundcovers as within the TCE that were disturbed, damaged, or removed during construction shall be restored as follows:
    - Trees and shrubs shall be replaced in kind with plants of the same species and equivalent size. If replacement plants of equivalent size are not available, the Contractor shall provide plants of the largest available container size, subject to Engineer approval.
    - Groundcover and turf areas shall be restored to the species and coverage documented in the pre-construction plant inventory.
    - All replacement plants shall meet the requirements of Section 9-14.7 and shall be installed in accordance with the planting details.
    - Replacement planting shall adhere to the establishment and warranty period as specified in Section 8-02.3(13).
- Plant spacing and placement shall be approved by the Engineer on site prior to installation.

8-02.4 Measurement

(*****)

This section is supplemented with the following: *Supplement*

Landscape Mulch will be measured by the cubic yard in the haul conveyance at the point of delivery.

Topsoil Type ___ will be measured by the cubic yard.

Tree Planting with Tree Grate will be measured per each installation for all work and materials specified.

TCE Area Restoration will be measured along the ground slope and computed in square feet of actual area completed, restored, and accepted.

8-02.5 Payment
(*****)

This section is supplemented with the following: *Supplement*

"Topsoil Type ___", per cubic yard.

The unit contract price per cubic yard for "Topsoil Type ____" shall be full compensation for all labor, materials, tools and equipment necessary to complete the work in accordance with the plans and specifications, including but not limited to weed control pre-treatment of topsoil areas, excavation, and stockpiling for the specific work.

"Landscape Mulch", per cubic yard.

The unit contract price per cubic yard for "Landscape Mulch" shall be full compensation of all costs necessary to furnish and place the material in accordance with the Plans and Specifications or as shown in the plans.

"TCE Area Restoration", per square foot.

The unit contract price per square foot for "TCE Area Restoration" shall be full compensation of all cost necessary to provide restoration in the TCE area as identified in the Plans and Specification, including but not limited to regrading, mulching, repair/adjust existing irrigation system, and restore landscaping to match pre-construction condition.

"Tree Planting with Tree Grate", per each.

The unit contract price for "Tree Planting with Tree Grate" shall be full compensation for all materials, labor, tools, equipment, and supplies necessary for each completed installation including but not limited to excavation; specified tree; tree grate, frame and anchor; structural soil; fine compost mulch; and tree root barrier.

Any incidental work required to complete the planting specified herein but not specifically mentioned in these Specifications shall be incidental to the planting, and all costs therefore shall be included in the unit contract prices of the bid items.

The Contractor shall be responsible for providing adequate water throughout the plant establishment period. All costs incurred shall be considered incidental to and included in the contract price of related bid items and no separate payment will be made.

Payment shall be 75 percent of the unit contract price per each for the contracted plant material when planted.

Payment shall be increased to the appropriate percentage upon accomplishment of the following phases of plant establishment:

After Initial Planting Acceptance ..... 85 percent
After Plant Establishment ..... 100 percent

8-03 IRRIGATION SYSTEMS

8-03.5 Payment

(*****)

This section is supplemented with the following: *Supplement*

"Plaza Irrigation System", lump sum.

All costs for furnishing, installing, and operating the irrigation system for the plaza as detailed in the Plans shall be included in the lump sum price for the complete plaza irrigation system.

The irrigation repair and adjustment work in the TCE area restoration in accordance with all provisions of Section 8-02.3(17) shall be included in the unit contract price for TCE Area Restoration.

8-12 CHAIN LINK FENCE AND WIRE FENCE

8-12.1 Description

(*****)

This section is supplemented with the following: *Supplement*

This work also includes furnishing and installing temporary security fence in accordance with the Plans.

8-12.4 Measurement

(*****)

This section is supplemented with the following: *Supplement*

Temporary Security Fence will be measured by the linear foot of completed fence, along the ground line, exclusive of openings.

Gate provided along the temporary security fence will be included as part of the linear foot measurement for the temporary security fence.

8-12.5 Payment
(*****)

This section is supplemented with the following: *Supplement*

"Temporary Security Fence", per linear foot.

The unit Contract price for "Temporary Security Fence" shall be full compensation for all equipment, labor, and materials necessary to complete work in accordance with the specifications and plan details.

8-14 CEMENT CONCRETE SIDEWALKS

8-14.1 Description
(*****)

This section is supplemented with the following: *Supplement*

This work shall consist of constructing cement concrete sidewalk and plaza pavement. Surface finishing, jointing and scoring shall be as specified on the Plans.

8-14.4 Measurement
(*****)

This section is supplemented with the following: *Supplement*

Cement concrete plaza paving will be measured by the square yard of finished surface.

Existing sidewalk and curb/gutter not identified for removal shall be protected. If any damage occurs by the Contractor due to construction access or construction activities, the damaged curb/gutter and sidewalk shall be replaced by the Contractor and will not be measured.

8-14.5 Payment
(*****)

This section is supplemented with the following: *Supplement*

"Cement Conc. Plaza Paving (Sand Finish)", per square yard.

The unit Contract price per square yard for Cement Conc. Plaza Paving (Sand Finish) shall be full pay for construction of the concrete paving, scoring, jointing, and surface treatment.

8-19 VACANT

(*****)

This section is revised as follows:

8-19 DECORATIVE ROCK

8-19.1 Description

This work shall consist of providing, washing, and installing decorative rock as shown and detailed on the Plans and details.

8-19.2 Materials

Materials shall meet the requirements as shown on the Plans, details, and as specified below.

Foothill River Rock

- Sourced from the Cascade foothills
- Natural mix of cool earth-tone colors, primarily in shades of gray.
- Washed rounded rock with a variety of sizes between 2” and 10”.

8-19.3 Construction Requirements

Installation of Decorative Rock shall be in accordance with Plans, details, standard details, specifications, and manufacturer's recommendations and requirements.

Foothills River Rock shall be washed prior to being delivered to the Project Site.

8-19.4 Measurement

Foothills River Rock will be measured per ton.

8-19.5 Payment

Payment will be made for the following bid item when it is included in the Proposal:

“Foothills River Rock”, per ton.

The contract bid price above shall be full compensation for all field measurements, materials, and work necessary to complete each installation.

8-32 VACANT

(*****)

This Section is revised as follows:

8-32 PLAZA SITE AMENITIES

8-32.1 Description

This work shall consist of providing and installing Plaza site amenities as shown and detailed on the Plans and details. Plaza amenities include a lighted "Mountlake Terrace" plaza lighted sign, wayfinding sign, bronze plate inlay, precast concrete benches, arc benches, granite filler blocks (associated with twig benches), granite wall caps and column-tops, and art sculpture foundation.

8-32.2 Materials

Materials shall meet the requirements as shown on the Plans, details, and as specified below. An engineer-approved equivalent may be utilized. See special provision 1-06 for Buy America Requirements.

Mountlake Terrace Plaza Lighted Sign:

- Artwork files will be provided by the Engineer
- Sign plate to be ½-inch stainless steel
- Finish: Sand, apply "Stainless Black Patina", Burnish and Apply Clear Coat
    - Basis of Design: Stainless Black Patina by Sculpt Nouveau (Everett Steel Co.)

Bronze Plate Inlay:

- Artwork files will be provided by the Engineer
- ½-inch thick bronze cast plate

Wayfinding Sign:

- Surface Mount
- Single Unit Upright Bulletin Case 24"x36"
- Frame and Case Color: Gloss Black
- Frame Finish: Powdercoat

Precast Concrete Benches:

- Color: Black

- Concrete Sealant
- Elastomeric Caulk – Match the lighter color between the Concrete Bench Concrete and Filler Block Color

Arc Benches:

- Basis of Design: Presidio Bench from Landscape Forms
- Surface Mount
- Color: Gloss Black
- Finish: Powdercoat

Granite Wall Caps, Column Tops, and Filler Blocks:

- Filler Blocks - All Academy Black, Saw Cut Sides and Diamond 8 Top
- Wall Caps - All Academy Black, Split Sides and Thermal Top
- Column Caps - All Academy Black, Split Sides and Thermal Top

8-32.3 Construction Requirements

Construction of Plaza amenities shall be in accordance with Plans, details, standard details, specifications, and manufacturer's recommendations and requirements.

8-32.4 Measurement

No unit of measure shall apply to the lump sum bid items “Mountlake Terrace Plaza Lighted Sign”, “Precast Concrete Benches”, “Arc Benches”, “Granite Wall Caps and Column Tops”, “Granite Filler Blocks”, and “Art Sculpture Foundation”.

Bronze Plate Inlay will be measured per each.

Wayfinding Sign will be measured per each.

8-32.5 Payment

Payment will be made for the following bid item when it is included in the Proposal:

“Mountlake Terrace Plaza Lighted Sign”, lump sum.

The lump sum Contract price for “Mountlake Terrace Plaza Lighted Sign“ shall be full compensation for all labor, material, tools and equipment, including all interior and exterior sign and illumination components, and connection to the illumination electrical system, and all other work necessary for a complete lighted sign.

“Bronze Plate Inlay”, per each.

“Wayfinding Sign”, per each.

“Precast Concrete Benches”, lump sum.

“Arc Benches”, lump sum.

“Granite Wall Caps and Column Tops”, lump sum.

“Granite Filler Blocks”, lump sum.

”Art Sculpture Foundation”, lump sum.

The contract bid price(s) above shall be full compensation for all field measurements, shop drawings, layout/fitting, materials, and work necessary to complete each installation.

Crushed Surfacing Base Course material for the Art Sculpture Foundation will be paid separately as bid item “Crushed Surfacing Base Course.”

END OF DIVISION 8

DIVISION 9
MATERIALS

9-14 EROSION CONTROL AND ROADSIDE PLANTING

9-14.2(1) Topsoil Type A
(*****)

This section is supplemented with the following: *Supplement*

Topsoil Type A shall meet the following requirements:

1. Cation exchange capacity (CEC) of Topsoil Type A shall be a minimum of 10 milliequivalents CEC/100 g dry soil (U.S. EPA Method 9081).
2. Organic content greater than 10-percent but less than 15-percent as measured on a dry weight basis using AASHTO T 267 Determination of Organic Content in Soils by Loss on Ignition.
3. pH shall be between 6.0 and 7.5.
4. Soluble salt contents shall be less than 3.0 hos/com.
5. Conductivity shall be less than 3 mmhs/cm.

Topsoil Type A shall be 40-percent to 55-percent Sandy Loam, 25-percent to 35-percent Sand, and 25-percent to 35-percent Fine Compost by volume. Sandy Loam shall be as defined by the US Department of Agriculture Soil Classification System, meeting the requirements of Table 1; and be free of phyto-toxic materials, and viable seeds, rhizomes or roots of State-listed noxious weeds.

Table 1. Particle Size Analysis for Loam

Sieve Size	Percent Passing
¾″	100%
½″	90-100%
3/8″	85-100%
#4	75-90%
#10	55-75%
#20	45-60%
#30	40-55%
#60	20-40%
#100	20-30%
#200	< 30%
#270	< 25%
2 μm	< 20%

The Fine Compost shall conform to the requirements of Section 9-14.5(8)

Topsoil Type A Submittal Requirements

At least 10 Working Days prior to placement of any soils, the Contractor shall submit the following test results from an independent accredited soils testing laboratory, for samples gathered and tested less than 90 days prior. The laboratory analysis shall be with a sample size of no less than 2 pounds.

1. Grain size analysis results for Sandy Loam. Using method ASTM D422
2. STA / Washington State Department of Transportation Technical Data Sheet for Compost, from a STA accredited lab.
3. Test results from an accredited soil laboratory for all soil mixes, including the following parameters:
    a. Total and Soluble Nitrogen (NO3 + NH3)
    b. Phosphorus
    c. Potassium
    d. pH
    e. Organic Matter % (Loss on Ignition method)
    f. Conductivity
    g. Calcium
    h. Sulfur
    i. Boron
4. Recommendations. Fertilizer and amendment recommendations from an accredited Soil Scientist or Agronomist; for the specified plant type and soil application depth.
5. Mix Samples. Two one (1) gallon samples of topsoil type A.

Topsoil Type A Acceptance

Contractor shall not place any soils until the Engineer has reviewed and confirmed the following:

1. Delivery tickets must show that the full delivered amount of soil matches the product type, volume and Manufacturer named in the submittals.

The Engineer may inspect any loads of soil and/or delivery tickets on delivery and stop placement if the delivered soil does not appear to match the submittals; and require sampling and testing of the delivered soil before authorizing soil placement.

9-14.5(4) Mulch and Amendments
(*****)

This section is supplemented with the following: *Supplement*

Landscape Mulch

Landscape Mulch shall consist of a uniform blend comprised by 50% Bark Mulch and 50% Fine Compost. Ninety-five percent of this mixture shall pass through a 1.5-inch sieve. The Bark Mulch shall be derived from Douglas fire, native pine, Sitka spruce, or western/mountain hemlock species. It shall not contain bark, resin, tannin, weed seeds, sawdust, splinters, or other debris/compounds detrimental to plant life. The Bark Mulch when tested shall be according to WSDOT Test Method T 123 prior to placement. The compost portion of the mix must comply with the Washington State Department of Ecology Administrative Code WAC-173-350-220. Landscape Mulch shall be free from: materials toxic to plant growth, rhizomes, roots, subsoil, or other debris and have a PH range of 6.0 - 8.0.

At the Engineer's request, prior to delivery, the Contractor shall provide the following:

- A 5-gallon sample of the product, for the Engineer's approval.

END OF DIVISION 9

APPENDIX A – State Prevailing Wage Rates

State of Washington
Department of Labor & Industries
Prevailing Wage Section - Telephone 360-902-5335
PO Box 44540, Olympia, WA 98504-4540

Washington State Prevailing Wage
The PREVAILING WAGES listed here include both the hourly wage rate and the hourly rate of fringe benefits. On public works projects, worker's wage and benefit rates must add to not less than this total. A brief description of overtime calculation requirements are provided on the Benefit Code Key.

Journey Level Prevailing Wage Rates for the Effective Date: 4/21/2026

Snohomish County

Trade	Job Classification	Wage	Holiday	Overtime	Note
Asbestos Abatement Workers	Journey Level	$67.39	**5D**	**1H**	
Boilermakers	Journey Level	$80.89	**5N**	**1C**	
Brick Mason	Journey Level	$76.07	**7E**	**1N**	
Brick Mason	Pointer-Caulker-Cleaner	$76.07	**7E**	**1N**	
Building Service Employees	Janitor	$17.13		**1**	
Building Service Employees	Shampooer	$17.13		**1**	
Building Service Employees	Waxer	$17.13		**1**	

Building Service Employees	Window Cleaner	$17.13		1	
Cabinet Makers (In Shop)	Journey Level	$27.33	5C	2M	
Carpenters	Acoustical Worker	$83.21	15J	11U	
Carpenters	Bridge Dock and Wharf Carpenter	$84.81	15J	11U	9L
Carpenters	Floor Layer & Floor Finisher	$83.21	15J	11U	
Carpenters	General Carpenter	$83.21	15J	11U	
Carpenters	Scaffold Erector	$83.21	15J	11U	
Cement Masons	Application of all Composition Mastic	$81.87	15J	4U	
Cement Masons	Application of all Epoxy Material	$81.36	15J	4U	
Cement Masons	Application of all Plastic Material	$81.87	15J	4U	
Cement Masons	Application of Sealing Compound	$81.36	15J	4U	
Cement Masons	Application of Underlayment	$81.87	15J	4U	
Cement Masons	Building General	$81.36	15J	4U	
Cement Masons	Composition or Kalman Floors	$81.87	15J	4U	

Cement Masons	Concrete Paving	$81.36	**15J**	**4U**
Cement Masons	Curb & Gutter Machine	$81.87	**15J**	**4U**
Cement Masons	Curb & Gutter, Sidewalks	$81.36	**15J**	**4U**
Cement Masons	Curing Concrete	$81.36	**15J**	**4U**
Cement Masons	Finish Colored Concrete	$81.87	**15J**	**4U**
Cement Masons	Floor Grinding	$81.87	**15J**	**4U**
Cement Masons	Floor Grinding/Polisher	$81.36	**15J**	**4U**
Cement Masons	Green Concrete Saw, self-powered	$81.87	**15J**	**4U**
Cement Masons	Grouting of all Plates	$81.36	**15J**	**4U**
Cement Masons	Grouting of all Tilt-up Panels	$81.36	**15J**	**4U**
Cement Masons	Gunite Nozzleman	$81.87	**15J**	**4U**
Cement Masons	Hand Powered Grinder	$81.87	**15J**	**4U**
Cement Masons	Journey Level	$81.36	**15J**	**4U**
Cement Masons	Patching Concrete	$81.36	**15J**	**4U**
Cement Masons	Pneumatic Power Tools	$81.87	**15J**	**4U**
Cement Masons	Power Chipping & Brushing	$81.87	**15J**	**4U**

Cement Masons	Sand Blasting Architectural Finish	$81.87	**15J**	**4U**	
Cement Masons	Screed & Rodding Machine	$81.87	**15J**	**4U**	
Cement Masons	Spackling or Skim Coat Concrete	$81.36	**15J**	**4U**	
Cement Masons	Troweling Machine Operator	$81.87	**15J**	**4U**	
Cement Masons	Troweling Machine Operator on Colored Slabs	$81.87	**15J**	**4U**	
Cement Masons	Tunnel Workers	$81.87	**15J**	**4U**	
Divers & Tenders	Bell/Vehicle/Submersible Operator (not under pressure)	$144.72	**15J**	**11T**	**9I**
Divers & Tenders	Dive Supervisor	$146.22	**15J**	**11T**	**9I**
Divers & Tenders	Diver	$144.72	**15J**	**11T**	**9I**
Divers & Tenders	Diver Tender	$91.05	**15J**	**11T**	**9I**
Divers & Tenders	Hyperbaric Worker - Compressed Air Worker 0-30.00 PSI	$114.73	**15J**	**11U**	
Divers & Tenders	Hyperbaric Worker - Compressed Air Worker 30.01-44.00 PSI	$124.28	**15J**	**11U**	

Divers & Tenders	Hyperbaric Worker - Compressed Air Worker 44.01 - 54.00 PSI	$133.82	**15J**	**11U**	
Divers & Tenders	Hyperbaric Worker - Compressed Air Worker 54.01 - 60.00 PSI	$143.37	**15J**	**11U**	
Divers & Tenders	Hyperbaric Worker - Compressed Air Worker 60.01 - 64.00 PSI	$152.91	**15J**	**11U**	
Divers & Tenders	Hyperbaric Worker - Compressed Air Worker 64.01 - 68.00 PSI	$162.46	**15J**	**11U**	
Divers & Tenders	Hyperbaric Worker - Compressed Air Worker 68.01 - 70.00 PSI	$172.00	**15J**	**11U**	
Divers & Tenders	Hyperbaric Worker - Compressed Air Worker 70.01 - 72.00 PSI	$181.55	**15J**	**11U**	
Divers & Tenders	Hyperbaric Worker - Compressed Air Worker 72.01 - 74.00 PSI	$191.09	**15J**	**11U**	
Divers & Tenders	Lead Diver (Dive Master)	$105.51	**15J**	**11T**	**9I**
Divers & Tenders	Manifold Operator (Life Support Technician)	$96.05	**15J**	**11U**	**9I**
Divers & Tenders	Remote Operated Vehicle Operator/Technician	$91.05	**15J**	**11T**	**9I**

Divers & Tenders	Remote Operated Vehicle Operator/Technician	$91.05	**15J**	**11U**	**9I**
Divers & Tenders	Remote Operated Vehicle Tender	$84.75	**15J**	**11T**	**9I**
Divers & Tenders	Stand-by Diver	$100.51	**15J**	**11T**	**9I**
Dredge Workers	Assistant Engineer	$89.47	**5D**	**3F**	
Dredge Workers	Assistant Mate (Deckhand)	$88.78	**5D**	**3F**	
Dredge Workers	Boatmen	$89.47	**5D**	**3F**	
Dredge Workers	Engineer Welder	$91.20	**5D**	**3F**	
Dredge Workers	Leverman, Hydraulic	$93.03	**5D**	**3F**	
Dredge Workers	Mates	$89.47	**5D**	**3F**	
Dredge Workers	Oiler	$88.78	**5D**	**3F**	
Drywall Applicator	Journey Level	$81.71	**15O**	**11S**	
Drywall Tapers	Journey Level	$81.71	**15O**	**11S**	
Electrical Fixture Maintenance Workers	Journey Level	$17.13		**1**	
Electricians - Inside	Cable Splicer	$100.52	**7H**	**1E**	
Electricians - Inside	Construction Stock Person	$48.08	**7H**	**1D**	

Electricians - Inside	Journey Level	$94.06	**7H**	**1E**	
Electricians - Motor Shop	Craftsman	$17.13		**1**	
Electricians - Motor Shop	Journey Level	$17.13		**1**	
Electricians - Powerline Construction	Cable Splicer	$107.31	**5A**	**4D**	
Electricians - Powerline Construction	Certified Line Welder	$98.45	**5A**	**4D**	
Electricians - Powerline Construction	Groundperson	$61.75	**5A**	**4D**	
Electricians - Powerline Construction	Heavy Line Equipment Operator	$98.45	**5A**	**4D**	
Electricians - Powerline Construction	Journey Level Lineperson	$98.45	**5A**	**4D**	
Electricians - Powerline Construction	Line Equipment Operator	$84.18	**5A**	**4D**	
Electricians - Powerline Construction	Meter Installer	$61.75	**5A**	**4D**	**8W**
Electricians - Powerline Construction	Pole Sprayer	$98.45	**5A**	**4D**	
Electricians - Powerline Construction	Powderperson	$72.81	**5A**	**4D**	
Electronic Technicians	Electronic Technicians Journey Level	$62.05	**5B**	**1B**	

Elevator Constructors	Mechanic	$119.17	7D	4A	
Elevator Constructors	Mechanic In Charge	$128.95	7D	4A	
Fabricated Precast Concrete Products	Journey Level	$17.13		1	
Fabricated Precast Concrete Products	Journey Level - In-Factory Work Only	$17.13		1	
Fence Erectors	Fence Erector	$57.66	15J	11P	8Y
Fence Erectors	Fence Laborer	$57.66	15J	11P	8Y
Flaggers	Journey Level	$57.66	15J	11P	8Y
Glaziers	Journey Level	$85.16	7L	1Y	
Heat & Frost Insulators And Asbestos Workers	Journey Level	$96.42	15H	11C	
Heating Equipment Mechanics	Journey Level	$107.92	7F	1E	
Hod Carriers & Mason Tenders	Journey Level	$71.09	15J	11P	8Y
Industrial Power Vacuum Cleaner	Journey Level	$17.13		1	
Inland Boatmen	Boat Operator	$71.28	5B	1K	
Inland Boatmen	Cook	$69.70	5B	1K	
Inland Boatmen	Deckhand	$70.00	5B	1K	

Inland Boatmen	Deckhand Engineer	$69.55	**5B**	**1K**
Inland Boatmen	Launch Operator	$71.23	**5B**	**1K**
Inland Boatmen	Mate	$89.12	**5B**	**1K**
Inspection/Cleaning/Sealing Of Sewer & Water Systems By Remote Control	Cleaner Operator	$54.56	**15M**	**11O**
Inspection/Cleaning/Sealing Of Sewer & Water Systems By Remote Control	Foamer Operator	$54.56	**15M**	**11O**
Inspection/Cleaning/Sealing Of Sewer & Water Systems By Remote Control	Grout Truck Operator	$54.56	**15M**	**11O**
Inspection/Cleaning/Sealing Of Sewer & Water Systems By Remote Control	Head Operator	$52.40	**15M**	**11O**
Inspection/Cleaning/Sealing Of Sewer & Water Systems By Remote Control	Technician	$45.97	**15M**	**11O**
Inspection/Cleaning/Sealing Of Sewer & Water Systems By Remote Control	TV Truck Operator	$49.20	**15M**	**11O**
Insulation Applicators	Journey Level	$83.21	**15J**	**11U**
Ironworkers	Journeyman	$94.82	**15K**	**11N**

Laborers	Air, Gas Or Electric Vibrating Screed	$67.39	**15J**	**11P**	**8Y**
Laborers	Airtrac Drill Operator	$69.37	**15J**	**11P**	**8Y**
Laborers	Ballast Regular Machine	$67.39	**15J**	**11P**	**8Y**
Laborers	Batch Weighman	$57.66	**15J**	**11P**	**8Y**
Laborers	Brick Pavers	$67.39	**15J**	**11P**	**8Y**
Laborers	Brush Cutter	$67.39	**15J**	**11P**	**8Y**
Laborers	Brush Hog Feeder	$67.39	**15J**	**11P**	**8Y**
Laborers	Burner	$67.39	**15J**	**11P**	**8Y**
Laborers	Caisson Worker	$69.37	**15J**	**11P**	**8Y**
Laborers	Carpenter Tender	$67.39	**15J**	**11P**	**8Y**
Laborers	Cement Dumper-paving	$69.37	**15J**	**11P**	**8Y**
Laborers	Cement Finisher Tender	$67.39	**15J**	**11P**	**8Y**
Laborers	Change House Or Dry Shack	$67.39	**15J**	**11P**	**8Y**
Laborers	Chipping Gun (30 Lbs. And Over)	$68.56	**15J**	**11P**	**8Y**
Laborers	Chipping Gun (Under 30 Lbs.)	$67.39	**15J**	**11P**	**8Y**
Laborers	Choker Setter	$67.39	**15J**	**11P**	**8Y**

Laborers	Chuck Tender	$67.39	**15J**	**11P**	**8Y**
Laborers	Clary Power Spreader	$68.56	**15J**	**11P**	**8Y**
Laborers	Clean-up Laborer	$67.39	**15J**	**11P**	**8Y**
Laborers	Concrete Dumper/Chute Operator	$69.37	**15J**	**11P**	**8Y**
Laborers	Concrete Form Stripper	$67.39	**15J**	**11P**	**8Y**
Laborers	Concrete Placement Crew	$69.37	**15J**	**11P**	**8Y**
Laborers	Concrete Saw Operator/Core Driller	$68.56	**15J**	**11P**	**8Y**
Laborers	Crusher Feeder	$57.66	**15J**	**11P**	**8Y**
Laborers	Curing Laborer	$67.39	**15J**	**11P**	**8Y**
Laborers	Demolition: Wrecking & Moving (Incl. Charred Material)	$67.39	**15J**	**11P**	**8Y**
Laborers	Ditch Digger	$67.39	**15J**	**11P**	**8Y**
Laborers	Diver	$69.37	**15J**	**11P**	**8Y**
Laborers	Drill Operator (Hydraulic, Diamond)	$68.56	**15J**	**11P**	**8Y**
Laborers	Dry Stack Walls	$67.39	**15J**	**11P**	**8Y**
Laborers	Dump Person	$67.39	**15J**	**11P**	**8Y**

Laborers	Epoxy Technician	$67.39	**15J**	**11P**	**8Y**
Laborers	Erosion Control Worker	$67.39	**15J**	**11P**	**8Y**
Laborers	Faller & Bucker Chain Saw	$68.56	**15J**	**11P**	**8Y**
Laborers	Fine Graders	$67.39	**15J**	**11P**	**8Y**
Laborers	Firewatch	$57.66	**15J**	**11P**	**8Y**
Laborers	Form Setter	$69.37	**15J**	**11P**	**8Y**
Laborers	Gabian Basket Builders	$67.39	**15J**	**11P**	**8Y**
Laborers	General Laborer	$67.39	**15J**	**11P**	**8Y**
Laborers	Grade Checker & Transit Person	$71.09	**15J**	**11P**	**8Y**
Laborers	Grinders	$67.39	**15J**	**11P**	**8Y**
Laborers	Grout Machine Tender	$67.39	**15J**	**11P**	**8Y**
Laborers	Groutmen (Pressure) Including Post Tension Beams	$68.56	**15J**	**11P**	**8Y**
Laborers	Guardrail Erector	$67.39	**15J**	**11P**	**8Y**
Laborers	Hazardous Waste Worker (Level A)	$69.37	**15J**	**11P**	**8Y**
Laborers	Hazardous Waste Worker (Level B)	$68.56	**15J**	**11P**	**8Y**

Laborers	Hazardous Waste Worker (Level C)	$67.39	**15J**	**11P**	**8Y**
Laborers	High Scaler	$69.37	**15J**	**11P**	**8Y**
Laborers	Jackhammer	$68.56	**15J**	**11P**	**8Y**
Laborers	Laserbeam Operator	$68.56	**15J**	**11P**	**8Y**
Laborers	Maintenance Person	$67.39	**15J**	**11P**	**8Y**
Laborers	Manhole Builder-Mudman	$68.56	**15J**	**11P**	**8Y**
Laborers	Material Yard Person	$67.39	**15J**	**11P**	**8Y**
Laborers	Mold Abatement Worker	$67.39	**15J**	**11P**	**8Y**
Laborers	Motorman-Dinky Locomotive	$71.19	**15J**	**11P**	**8Y**
Laborers	nozzleman (concrete pump, green cutter when using combination of high pressure air & water on concrete & rock, sandblast, gunite, shotcrete, water blaster, vacuum blaster)	$71.09	**15J**	**11P**	**8Y**
Laborers	Pavement Breaker	$68.56	**15J**	**11P**	**8Y**
Laborers	Pilot Car	$57.66	**15J**	**11P**	**8Y**
Laborers	Pipe Layer (Lead)	$71.09	**15J**	**11P**	**8Y**

Laborers	Pipe Layer/Tailor	$68.56	**15J**	**11P**	**8Y**
Laborers	Pipe Pot Tender	$68.56	**15J**	**11P**	**8Y**
Laborers	Pipe Reliner	$68.56	**15J**	**11P**	**8Y**
Laborers	Pipe Wrapper	$68.56	**15J**	**11P**	**8Y**
Laborers	Pot Tender	$67.39	**15J**	**11P**	**8Y**
Laborers	Powderman	$69.37	**15J**	**11P**	**8Y**
Laborers	Powderman's Helper	$67.39	**15J**	**11P**	**8Y**
Laborers	Power Jacks	$68.56	**15J**	**11P**	**8Y**
Laborers	Power Washer	$67.39	**15J**	**11P**	**8Y**
Laborers	Railroad Spike Puller - Power	$68.56	**15J**	**11P**	**8Y**
Laborers	Raker - Asphalt	$71.09	**15J**	**11P**	**8Y**
Laborers	Re-timberman	$69.37	**15J**	**11P**	**8Y**
Laborers	Remote Equipment Operator	$68.56	**15J**	**11P**	**8Y**
Laborers	Rigger/Signal Person	$68.56	**15J**	**11P**	**8Y**
Laborers	Rip Rap Person	$67.39	**15J**	**11P**	**8Y**
Laborers	Rivet Buster	$68.56	**15J**	**11P**	**8Y**

Laborers	Rodder	$69.37	**15J**	**11P**	**8Y**
Laborers	Scaffold Erector	$67.39	**15J**	**11P**	**8Y**
Laborers	Scale Person	$67.39	**15J**	**11P**	**8Y**
Laborers	Sloper (Over 20")	$68.56	**15J**	**11P**	**8Y**
Laborers	Sloper Sprayer	$67.39	**15J**	**11P**	**8Y**
Laborers	Spreader (Concrete)	$69.37	**15J**	**11P**	**8Y**
Laborers	Stake Hopper	$67.39	**15J**	**11P**	**8Y**
Laborers	Stock Piler	$67.39	**15J**	**11P**	**8Y**
Laborers	Swinging Stage/Boatswain Chair	$57.66	**15J**	**11P**	**8Y**
Laborers	Tamper & Similar Electric, Air & Gas Operated Tools	$68.56	**15J**	**11P**	**8Y**
Laborers	Tamper (Multiple & Self-propelled)	$68.56	**15J**	**11P**	**8Y**
Laborers	Timber Person - Sewer (Lagger, Shorer & Cribber)	$68.56	**15J**	**11P**	**8Y**
Laborers	Toolroom Person (at Jobsite)	$67.39	**15J**	**11P**	**8Y**
Laborers	Topper	$67.39	**15J**	**11P**	**8Y**
Laborers	Track Laborer	$67.39	**15J**	**11P**	**8Y**

Laborers	Track Liner (Power)	$68.56	**15J**	**11P**	**8Y**
Laborers	Traffic Control Laborer	$61.41	**15J**	**11P**	**9C**
Laborers	Traffic Control Supervisor	$64.86	**15J**	**11P**	**9C**
Laborers	Truck Mounted Attenuator	$61.41	**15J**	**11P**	**9C**
Laborers	Truck Spotter	$67.39	**15J**	**11P**	**8Y**
Laborers	Tugger Operator	$68.56	**15J**	**11P**	**8Y**
Laborers	Tunnel Work-Compressed Air Worker 0-30 psi	$225.32	**15J**	**11P**	**9B**
Laborers	Tunnel Work-Compressed Air Worker 30.01-44.00 psi	$230.35	**15J**	**11P**	**9B**
Laborers	Tunnel Work-Compressed Air Worker 44.01-54.00 psi	$234.03	**15J**	**11P**	**9B**
Laborers	Tunnel Work-Compressed Air Worker 54.01-60.00 psi	$239.73	**15J**	**11P**	**9B**
Laborers	Tunnel Work-Compressed Air Worker 60.01-64.00 psi	$241.85	**15J**	**11P**	**9B**
Laborers	Tunnel Work-Compressed Air Worker 64.01-68.00 psi	$246.95	**15J**	**11P**	**9B**

Laborers	Tunnel Work-Compressed Air Worker 68.01-70.00 psi	$248.85	**15J**	**11P**	**9B**
Laborers	Tunnel Work-Compressed Air Worker 70.01-72.00 psi	$250.85	**15J**	**11P**	**9B**
Laborers	Tunnel Work-Compressed Air Worker 72.01-74.00 psi	$252.85	**15J**	**11P**	**9B**
Laborers	Tunnel Work-Guage and Lock Tender	$71.19	**15J**	**11P**	**8Y**
Laborers	Tunnel Work-Miner	$71.19	**15J**	**11P**	**8Y**
Laborers	Vibrator	$69.37	**15J**	**11P**	**8Y**
Laborers	Vinyl Seamer	$67.39	**15J**	**11P**	**8Y**
Laborers	Watchman	$52.73	**15J**	**11P**	**8Y**
Laborers	Welder	$68.56	**15J**	**11P**	**8Y**
Laborers	Well Point Laborer	$68.56	**15J**	**11P**	**8Y**
Laborers	Window Washer/Cleaner	$52.73	**15J**	**11P**	**8Y**
Laborers - Underground Sewer & Water	General Laborer & Topman	$67.39	**15J**	**11P**	**8Y**
Laborers - Underground Sewer & Water	Pipe Layer	$68.56	**15J**	**11P**	**8Y**

Landscape Construction	Landscape Construction/Landscaping Or Planting Laborers	$52.73	**15J**	**11P**	**8Y**
Landscape Construction	Landscape Operator	$91.81	**15J**	**11G**	**8X**
Landscape Maintenance	Groundskeeper	$17.13		**1**	
Lathers	Journey Level	$81.71	**15O**	**11S**	
Marble Setters	Journey Level	$76.07	**7E**	**1N**	
Metal Fabrication (In Shop)	Journey Level	$37.56	**0**	**11D**	
Millwright	Journey Level	$80.28	**15J**	**4C**	
Modular Buildings	Journey Level	$17.13		**1**	
Painters	Journey Level	$57.46	**6Z**	**11J**	
Pile Driver	Crew Tender	$80.50	**15J**	**11U**	**9L**
Pile Driver	Journey Level	$84.81	**15J**	**11U**	
Plasterers	Journey Level	$78.60	**7Q**	**1R**	
Plasterers	Nozzleman	$82.70	**7Q**	**1R**	
Playground & Park Equipment Installers	Journey Level	$17.13		**1**	
Plumbers & Pipefitters	Journey Level	$95.37	**5A**	**1G**	

Power Equipment Operators	Asphalt Plant Operators	$93.36	**15J**	**11G**	**8X**
Power Equipment Operators	Assistant Engineer	$87.77	**15J**	**11G**	**8X**
Power Equipment Operators	Barrier Machine (zipper)	$92.52	**15J**	**11G**	**8X**
Power Equipment Operators	Batch Plant Operator: concrete	$92.52	**15J**	**11G**	**8X**
Power Equipment Operators	Boat Operator	$92.08	**7A**	**11H**	**8X**
Power Equipment Operators	Bobcat	$87.77	**15J**	**11G**	**8X**
Power Equipment Operators	Brokk - Remote Demolition Equipment	$87.77	**15J**	**11G**	**8X**
Power Equipment Operators	Brooms	$87.77	**15J**	**11G**	**8X**
Power Equipment Operators	Bump Cutter	$92.52	**15J**	**11G**	**8X**
Power Equipment Operators	Cableways	$93.36	**15J**	**11G**	**8X**
Power Equipment Operators	Chipper	$92.52	**15J**	**11G**	**8X**
Power Equipment Operators	Compressor	$87.77	**15J**	**11G**	**8X**

Power Equipment Operators	Concrete Finish Machine - Laser Screed	$87.77	**15J**	**11G**	**8X**
Power Equipment Operators	Concrete Pump - Mounted Or Trailer High Pressure Line Pump, Pump High Pressure	$91.81	**15J**	**11G**	**8X**
Power Equipment Operators	Concrete Pump: Truck Mount With Boom Attachment Over 42 M	$93.36	**15J**	**11G**	**8X**
Power Equipment Operators	Concrete Pump: Truck Mount With Boom Attachment Up To 42m	$92.52	**15J**	**11G**	**8X**
Power Equipment Operators	Conveyors	$91.81	**15J**	**11G**	**8X**
Power Equipment Operators	Cranes Friction: 200 tons and over	$94.85	**7A**	**11H**	**8X**
Power Equipment Operators	Cranes, A-frame: 10 tons and under	$86.60	**7A**	**11H**	**8X**
Power Equipment Operators	Cranes: 100 tons through 199 tons, or 150' of boom (including jib with attachments)	$92.98	**7A**	**11H**	**8X**
Power Equipment Operators	Cranes: 20 tons through 44 tons with attachments	$91.25	**7A**	**11H**	**8X**
Power Equipment Operators	Cranes: 200 tons- 299 tons, or 250' of boom	$93.95	**7A**	**11H**	**8X**

	including jib with attachments				
Power Equipment Operators	Cranes: 300 tons and over or 300' of boom including jib with attachments	$94.85	**7A**	**11H**	**8X**
Power Equipment Operators	Cranes: 45 tons through 99 tons, under 150' of boom(including jib with attachments)	$92.08	**7A**	**11H**	**8X**
Power Equipment Operators	Cranes: Friction cranes through 199 tons	$93.95	**7A**	**11H**	**8X**
Power Equipment Operators	Cranes: through 19 tons with attachments, a-frame over 10 tons	$90.55	**7A**	**11H**	**8X**
Power Equipment Operators	Crusher	$92.52	**15J**	**11G**	**8X**
Power Equipment Operators	Deck Engineer/Deck Winches (power)	$92.52	**15J**	**11G**	**8X**
Power Equipment Operators	Derricks, On Building Work	$92.08	**7A**	**11H**	**8X**
Power Equipment Operators	Dozers D-9 & Under	$91.81	**15J**	**11G**	**8X**
Power Equipment Operators	Drill Oilers: Auger Type, Truck Or Crane Mount	$91.81	**15J**	**11G**	**8X**
Power Equipment Operators	Drilling Machine	$94.30	**15J**	**11G**	**8X**

Power Equipment Operators	Elevator and man-lift: permanent and shaft type	$87.77	**15J**	**11G**	**8X**
Power Equipment Operators	Finishing Machine, Bidwell And Gamaco & Similar Equipment	$92.52	**15J**	**11G**	**8X**
Power Equipment Operators	Forklift: 3000 lbs and over with attachments	$91.81	**15J**	**11G**	**8X**
Power Equipment Operators	Forklifts: under 3000 lbs. with attachments	$87.77	**15J**	**11G**	**8X**
Power Equipment Operators	Grade Engineer: Using Blue Prints, Cut Sheets, Etc	$92.52	**15J**	**11G**	**8X**
Power Equipment Operators	Gradechecker/Stakeman	$87.77	**15J**	**11G**	**8X**
Power Equipment Operators	Guardrail Punch	$92.52	**15J**	**11G**	**8X**
Power Equipment Operators	Hard Tail End Dump Articulating Off- Road Equipment 45 Yards. & Over	$93.36	**15J**	**11G**	**8X**
Power Equipment Operators	Hard Tail End Dump Articulating Off-road Equipment Under 45 Yards	$92.52	**15J**	**11G**	**8X**
Power Equipment Operators	Horizontal/Directional Drill Locator	$91.81	**15J**	**11G**	**8X**

Power Equipment Operators	Horizontal/Directional Drill Operator	$92.52	**15J**	**11G**	**8X**
Power Equipment Operators	Hydralifts/Boom Trucks Over 10 Tons	$90.55	**7A**	**11H**	**8X**
Power Equipment Operators	Hydralifts/boom trucks: 10 tons and under	$86.60	**7A**	**11H**	**8X**
Power Equipment Operators	Leverman	$95.28	**15J**	**11G**	**8X**
Power Equipment Operators	Loader, Overhead, 6 Yards. But Not Including 8 Yards	$93.36	**15J**	**11G**	**8X**
Power Equipment Operators	Loaders, Overhead Under 6 Yards	$92.52	**15J**	**11G**	**8X**
Power Equipment Operators	Loaders, Plant Feed	$92.52	**15J**	**11G**	**8X**
Power Equipment Operators	Loaders: Elevating Type Belt	$91.81	**15J**	**11G**	**8X**
Power Equipment Operators	Locomotives, All	$92.52	**15J**	**11G**	**8X**
Power Equipment Operators	Material Transfer Device	$92.52	**15J**	**11G**	**8X**
Power Equipment Operators	Mechanics: All (Leadmen - $0.50 per hour over mechanic)	$94.30	**15J**	**11G**	**8X**
Power Equipment Operators	Motor Patrol Graders	$93.36	**15J**	**11G**	**8X**

Power Equipment Operators	Mucking Machine, Mole, Tunnel Drill, Boring, Road Header And/or Shield	$93.36	**15J**	**11G**	**8X**
Power Equipment Operators	Oil Distributors, Blower Distribution & Mulch Seeding Operator	$87.77	**15J**	**11G**	**8X**
Power Equipment Operators	Outside Hoists (Elevators and Manlifts), Air Tuggers, Strato	$91.81	**15J**	**11G**	**8X**
Power Equipment Operators	Overhead, bridge type Crane: 20 tons through 44 tons	$91.25	**7A**	**11H**	**8X**
Power Equipment Operators	Overhead, bridge type: 100 tons and over	$92.98	**7A**	**11H**	**8X**
Power Equipment Operators	Overhead, bridge type: 45 tons through 99 tons	$92.08	**7A**	**11H**	**8X**
Power Equipment Operators	Pavement Breaker	$87.77	**15J**	**11G**	**8X**
Power Equipment Operators	Pile Driver (other Than Crane Mount)	$92.52	**15J**	**11G**	**8X**
Power Equipment Operators	Plant Oiler - Asphalt, Crusher	$91.81	**15J**	**11G**	**8X**
Power Equipment Operators	Posthole Digger, Mechanical	$87.77	**15J**	**11G**	**8X**
Power Equipment Operators	Power Plant	$87.77	**15J**	**11G**	**8X**

Power Equipment Operators	Pumps - Water	$87.77	**15J**	**11G**	**8X**
Power Equipment Operators	Quad 9, Hd 41, D10 And Over	$93.36	**15J**	**11G**	**8X**
Power Equipment Operators	Quick Tower: no cab, under 100 feet in height base to boom	$92.52	**15J**	**11G**	**8X**
Power Equipment Operators	Remote Control Operator On Rubber Tired Earth Moving Equipment	$93.36	**15J**	**11G**	**8X**
Power Equipment Operators	Rigger and Bellman	$86.60	**7A**	**11H**	**8X**
Power Equipment Operators	Rigger/Signal Person, Bellman(Certified)	$90.55	**7A**	**11H**	**8X**
Power Equipment Operators	Rollagon	$93.36	**15J**	**11G**	**8X**
Power Equipment Operators	Roller, Other Than Plant Mix	$87.77	**15J**	**11G**	**8X**
Power Equipment Operators	Roller, Plant Mix Or Multi-lift Materials	$91.81	**15J**	**11G**	**8X**
Power Equipment Operators	Roto-mill, Roto-grinder	$92.52	**15J**	**11G**	**8X**
Power Equipment Operators	Saws - Concrete	$91.81	**15J**	**11G**	**8X**
Power Equipment Operators	Scraper, Self Propelled Under 45 Yards	$92.52	**15J**	**11G**	**8X**

Power Equipment Operators	Scrapers - Concrete & Carry All	$91.81	**15J**	**11G**	**8X**
Power Equipment Operators	Scrapers, Self-propelled: 45 Yards And Over	$93.36	**15J**	**11G**	**8X**
Power Equipment Operators	Service Engineers: Equipment	$91.81	**15J**	**11G**	**8X**
Power Equipment Operators	Shotcrete/Gunite Equipment	$87.77	**15J**	**11G**	**8X**
Power Equipment Operators	Shovel, Excavator, Backhoe, Tractors Under 15 Metric Tons	$91.81	**15J**	**11G**	**8X**
Power Equipment Operators	Shovel, Excavator, Backhoe: Over 30 Metric Tons To 50 Metric Tons	$93.36	**15J**	**11G**	**8X**
Power Equipment Operators	Shovel, Excavator, Backhoes, Tractors: 15 To 30 Metric Tons	$92.52	**15J**	**11G**	**8X**
Power Equipment Operators	Shovel, Excavator, Backhoes: Over 50 Metric Tons To 90 Metric Tons	$94.30	**15J**	**11G**	**8X**
Power Equipment Operators	Shovel, Excavator, Backhoes: Over 90 Metric Tons	$95.28	**15J**	**11G**	**8X**
Power Equipment Operators	Slipform Pavers	$93.36	**15J**	**11G**	**8X**

Power Equipment Operators	Spreader, Topsider & Screedman	$93.36	**15J**	**11G**	**8X**
Power Equipment Operators	Subgrader Trimmer	$92.52	**15J**	**11G**	**8X**
Power Equipment Operators	Tower Bucket Elevators	$91.81	**15J**	**11G**	**8X**
Power Equipment Operators	Tower Crane: over 175' through 250' in height, base to boom	$93.95	**7A**	**11H**	**8X**
Power Equipment Operators	Tower crane: up to 175' in height base to boom	$92.98	**7A**	**11H**	**8X**
Power Equipment Operators	Tower Cranes: over 250' in height from base to boom	$94.85	**7A**	**11H**	**8X**
Power Equipment Operators	Transporters, All Track Or Truck Type	$93.36	**15J**	**11G**	**8X**
Power Equipment Operators	Trenching Machines	$91.81	**15J**	**11G**	**8X**
Power Equipment Operators	Truck Crane Oiler/Driver: 100 tons and over	$91.25	**7A**	**11H**	**8X**
Power Equipment Operators	Truck crane oiler/driver: under 100 tons	$90.55	**7A**	**11H**	**8X**
Power Equipment Operators	Truck Mount Portable Conveyor	$92.52	**15J**	**11G**	**8X**
Power Equipment Operators	Vac Truck (Vactor Guzzler, Hydro Excavator)	$92.52	**15J**	**11G**	**8X**

Power Equipment Operators	Welder	$93.36	**15J**	**11G**	**8X**
Power Equipment Operators	Wheel Tractors, Farmall Type	$87.77	**15J**	**11G**	**8X**
Power Equipment Operators	Yo Yo Pay Dozer	$92.52	**15J**	**11G**	**8X**
Power Equipment Operators- Underground Sewer & Water	Asphalt Plant Operators	$93.36	**15J**	**11G**	**8X**
Power Equipment Operators- Underground Sewer & Water	Assistant Engineer	$87.77	**15J**	**11G**	**8X**
Power Equipment Operators- Underground Sewer & Water	Barrier Machine (zipper)	$92.52	**15J**	**11G**	**8X**
Power Equipment Operators- Underground Sewer & Water	Batch Plant Operator, Concrete	$92.52	**15J**	**11G**	**8X**
Power Equipment Operators- Underground Sewer & Water	Boat Operator	$92.08	**7A**	**11H**	**8X**
Power Equipment Operators- Underground Sewer & Water	Bobcat	$87.77	**15J**	**11G**	**8X**
Power Equipment Operators- Underground Sewer & Water	Brokk - Remote Demolition Equipment	$87.77	**15J**	**11G**	**8X**

Power Equipment Operators- Underground Sewer & Water	Brooms	$87.77	**15J**	**11G**	**8X**
Power Equipment Operators- Underground Sewer & Water	Bump Cutter	$92.52	**15J**	**11G**	**8X**
Power Equipment Operators- Underground Sewer & Water	Cableways	$93.36	**15J**	**11G**	**8X**
Power Equipment Operators- Underground Sewer & Water	Chipper	$92.52	**15J**	**11G**	**8X**
Power Equipment Operators- Underground Sewer & Water	Compressor	$87.77	**15J**	**11G**	**8X**
Power Equipment Operators- Underground Sewer & Water	Concrete Finish Machine - Laser Screed	$87.77	**15J**	**11G**	**8X**
Power Equipment Operators- Underground Sewer & Water	Concrete Pump - Mounted Or Trailer High Pressure Line Pump, Pump High Pressure	$91.81	**15J**	**11G**	**8X**
Power Equipment Operators- Underground Sewer & Water	Concrete Pump: Truck Mount With Boom Attachment Over 42 M	$93.36	**15J**	**11G**	**8X**

Power Equipment Operators- Underground Sewer & Water	Concrete Pump: Truck Mount With Boom Attachment Up To 42m	$92.52	**15J**	**11G**	**8X**
Power Equipment Operators- Underground Sewer & Water	Conveyors	$91.81	**15J**	**11G**	**8X**
Power Equipment Operators- Underground Sewer & Water	Cranes Friction: 200 tons and over	$94.85	**7A**	**11H**	**8X**
Power Equipment Operators- Underground Sewer & Water	Cranes, A-frame: 10 tons and under	$86.60	**7A**	**11H**	**8X**
Power Equipment Operators- Underground Sewer & Water	Cranes: 100 tons through 199 tons, or 150' of boom (including jib with attachments)	$92.98	**7A**	**11H**	**8X**
Power Equipment Operators- Underground Sewer & Water	Cranes: 20 tons through 44 tons with attachments	$91.25	**7A**	**11H**	**8X**
Power Equipment Operators- Underground Sewer & Water	Cranes: 200 tons- 299 tons, or 250' of boom including jib with attachments	$93.95	**7A**	**11H**	**8X**
Power Equipment Operators- Underground Sewer & Water	Cranes: 300 tons and over or 300' of boom including jib with attachments	$94.85	**7A**	**11H**	**8X**
Power Equipment Operators- Underground	Cranes: 45 tons through 99 tons, under 150' of	$92.08	**7A**	**11H**	**8X**

Sewer & Water	boom(including jib with attachments)				
Power Equipment Operators- Underground Sewer & Water	Cranes: Friction cranes through 199 tons	$93.95	**7A**	**11H**	**8X**
Power Equipment Operators- Underground Sewer & Water	Cranes: through 19 tons with attachments, a-frame over 10 tons	$90.55	**7A**	**11H**	**8X**
Power Equipment Operators- Underground Sewer & Water	Crusher	$92.52	**15J**	**11G**	**8X**
Power Equipment Operators- Underground Sewer & Water	Deck Engineer/Deck Winches (power)	$92.52	**15J**	**11G**	**8X**
Power Equipment Operators- Underground Sewer & Water	Derricks, On Building Work	$92.08	**7A**	**11H**	**8X**
Power Equipment Operators- Underground Sewer & Water	Dozers D-9 & Under	$91.81	**15J**	**11G**	**8X**
Power Equipment Operators- Underground Sewer & Water	Drill Oilers: Auger Type, Truck Or Crane Mount	$91.81	**15J**	**11G**	**8X**
Power Equipment Operators- Underground Sewer & Water	Drilling Machine	$94.30	**15J**	**11G**	**8X**

Power Equipment Operators- Underground Sewer & Water	Elevator and man-lift: permanent and shaft type	$87.77	**15J**	**11G**	**8X**
Power Equipment Operators- Underground Sewer & Water	Finishing Machine, Bidwell And Gamaco & Similar Equipment	$92.52	**15J**	**11G**	**8X**
Power Equipment Operators- Underground Sewer & Water	Forklift: 3000 lbs and over with attachments	$91.81	**15J**	**11G**	**8X**
Power Equipment Operators- Underground Sewer & Water	Forklifts: under 3000 lbs. with attachments	$87.77	**15J**	**11G**	**8X**
Power Equipment Operators- Underground Sewer & Water	Grade Engineer: Using Blue Prints, Cut Sheets, Etc	$92.52	**15J**	**11G**	**8X**
Power Equipment Operators- Underground Sewer & Water	Gradechecker/Stakeman	$87.77	**15J**	**11G**	**8X**
Power Equipment Operators- Underground Sewer & Water	Guardrail Punch	$92.52	**15J**	**11G**	**8X**
Power Equipment Operators- Underground Sewer & Water	Hard Tail End Dump Articulating Off- Road Equipment 45 Yards. & Over	$93.36	**15J**	**11G**	**8X**

Power Equipment Operators- Underground Sewer & Water	Hard Tail End Dump Articulating Off-road Equipment Under 45 Yards	$92.52	**15J**	**11G**	**8X**
Power Equipment Operators- Underground Sewer & Water	Horizontal/Directional Drill Locator	$91.81	**15J**	**11G**	**8X**
Power Equipment Operators- Underground Sewer & Water	Horizontal/Directional Drill Operator	$92.52	**15J**	**11G**	**8X**
Power Equipment Operators- Underground Sewer & Water	Hydralifts/boom trucks: 10 tons and under	$86.60	**7A**	**11H**	**8X**
Power Equipment Operators- Underground Sewer & Water	Hydralifts/boom trucks: over 10 tons	$90.55	**7A**	**11H**	**8X**
Power Equipment Operators- Underground Sewer & Water	Leverman	$95.28	**15J**	**11G**	**8X**
Power Equipment Operators- Underground Sewer & Water	Loader, Overhead, 6 Yards. But Not Including 8 Yards	$93.36	**15J**	**11G**	**8X**
Power Equipment Operators- Underground Sewer & Water	Loaders, Overhead Under 6 Yards	$92.52	**15J**	**11G**	**8X**

Power Equipment Operators- Underground Sewer & Water	Loaders, Plant Feed	$92.52	**15J**	**11G**	**8X**
Power Equipment Operators- Underground Sewer & Water	Loaders: Elevating Type Belt	$91.81	**15J**	**11G**	**8X**
Power Equipment Operators- Underground Sewer & Water	Locomotives, All	$92.52	**15J**	**11G**	**8X**
Power Equipment Operators- Underground Sewer & Water	Material Transfer Device	$92.52	**15J**	**11G**	**8X**
Power Equipment Operators- Underground Sewer & Water	Mechanics: All (Leadmen - $0.50 per hour over mechanic)	$94.30	**15J**	**11G**	**8X**
Power Equipment Operators- Underground Sewer & Water	Motor Patrol Graders	$93.36	**15J**	**11G**	**8X**
Power Equipment Operators- Underground Sewer & Water	Mucking Machine, Mole, Tunnel Drill, Boring, Road Header And/or Shield	$93.36	**15J**	**11G**	**8X**
Power Equipment Operators- Underground Sewer & Water	Oil Distributors, Blower Distribution & Mulch Seeding Operator	$87.77	**15J**	**11G**	**8X**
Power Equipment Operators- Underground Sewer & Water	Outside Hoists (Elevators and Manlifts), Air Tuggers, Strato	$91.81	**15J**	**11G**	**8X**

Power Equipment Operators- Underground Sewer & Water	Overhead, bridge type Crane: 20 tons through 44 tons	$91.25	**7A**	**11H**	**8X**
Power Equipment Operators- Underground Sewer & Water	Overhead, bridge type: 100 tons and over	$92.98	**7A**	**11H**	**8X**
Power Equipment Operators- Underground Sewer & Water	Overhead, bridge type: 45 tons through 99 tons	$92.08	**7A**	**11H**	**8X**
Power Equipment Operators- Underground Sewer & Water	Pavement Breaker	$87.77	**15J**	**11G**	**8X**
Power Equipment Operators- Underground Sewer & Water	Pile Driver (other Than Crane Mount)	$92.52	**15J**	**11G**	**8X**
Power Equipment Operators- Underground Sewer & Water	Plant Oiler - Asphalt, Crusher	$91.81	**15J**	**11G**	**8X**
Power Equipment Operators- Underground Sewer & Water	Posthole Digger, Mechanical	$87.77	**15J**	**11G**	**8X**
Power Equipment Operators- Underground Sewer & Water	Power Plant	$87.77	**15J**	**11G**	**8X**
Power Equipment Operators- Underground Sewer & Water	Pumps - Water	$87.77	**15J**	**11G**	**8X**

Power Equipment Operators- Underground Sewer & Water	Quad 9, Hd 41, D10 And Over	$93.36	**15J**	**11G**	**8X**
Power Equipment Operators- Underground Sewer & Water	Quick Tower: no cab, under 100 feet in height base to boom	$92.52	**15J**	**11G**	**8X**
Power Equipment Operators- Underground Sewer & Water	Remote Control Operator On Rubber Tired Earth Moving Equipment	$93.36	**15J**	**11G**	**8X**
Power Equipment Operators- Underground Sewer & Water	Rigger and Bellman	$86.60	**7A**	**11H**	**8X**
Power Equipment Operators- Underground Sewer & Water	Rigger/Signal Person, Bellman(Certified)	$90.55	**7A**	**11H**	**8X**
Power Equipment Operators- Underground Sewer & Water	Rollagon	$93.36	**15J**	**11G**	**8X**
Power Equipment Operators- Underground Sewer & Water	Roller, Other Than Plant Mix	$87.77	**15J**	**11G**	**8X**
Power Equipment Operators- Underground Sewer & Water	Roller, Plant Mix Or Multi-lift Materials	$91.81	**15J**	**11G**	**8X**
Power Equipment Operators- Underground Sewer & Water	Roto-mill, Roto-grinder	$92.52	**15J**	**11G**	**8X**

Power Equipment Operators- Underground Sewer & Water	Saws - Concrete	$91.81	**15J**	**11G**	**8X**
Power Equipment Operators- Underground Sewer & Water	Scraper, Self Propelled Under 45 Yards	$92.52	**15J**	**11G**	**8X**
Power Equipment Operators- Underground Sewer & Water	Scrapers - Concrete & Carry All	$91.81	**15J**	**11G**	**8X**
Power Equipment Operators- Underground Sewer & Water	Scrapers, Self-propelled: 45 Yards And Over	$93.36	**15J**	**11G**	**8X**
Power Equipment Operators- Underground Sewer & Water	Shotcrete/Gunite Equipment	$87.77	**15J**	**11G**	**8X**
Power Equipment Operators- Underground Sewer & Water	Shovel, Excavator, Backhoe, Tractors Under 15 Metric Tons	$91.81	**15J**	**11G**	**8X**
Power Equipment Operators- Underground Sewer & Water	Shovel, Excavator, Backhoe: Over 30 Metric Tons To 50 Metric Tons	$93.36	**15J**	**11G**	**8X**
Power Equipment Operators- Underground Sewer & Water	Shovel, Excavator, Backhoes, Tractors: 15 To 30 Metric Tons	$92.52	**15J**	**11G**	**8X**
Power Equipment Operators- Underground Sewer & Water	Shovel, Excavator, Backhoes: Over 50 Metric Tons To 90 Metric Tons	$94.30	**15J**	**11G**	**8X**

Power Equipment Operators- Underground Sewer & Water	Shovel, Excavator, Backhoes: Over 90 Metric Tons	$95.28	**15J**	**11G**	**8X**
Power Equipment Operators- Underground Sewer & Water	Slipform Pavers	$93.36	**15J**	**11G**	**8X**
Power Equipment Operators- Underground Sewer & Water	Spreader, Topsider & Screedman	$93.36	**15J**	**11G**	**8X**
Power Equipment Operators- Underground Sewer & Water	Subgrader Trimmer	$92.52	**15J**	**11G**	**8X**
Power Equipment Operators- Underground Sewer & Water	Tower Bucket Elevators	$91.81	**15J**	**11G**	**8X**
Power Equipment Operators- Underground Sewer & Water	Tower Crane: over 175' through 250' in height, base to boom	$93.95	**7A**	**11H**	**8X**
Power Equipment Operators- Underground Sewer & Water	Tower crane: up to 175' in height base to boom	$92.98	**7A**	**11H**	**8X**
Power Equipment Operators- Underground Sewer & Water	Tower Cranes: over 250' in height from base to boom	$94.85	**7A**	**11H**	**8X**
Power Equipment Operators- Underground Sewer & Water	Transporters, All Track Or Truck Type	$93.36	**15J**	**11G**	**8X**

Power Equipment Operators- Underground Sewer & Water	Trenching Machines	$91.81	**15J**	**11G**	**8X**
Power Equipment Operators- Underground Sewer & Water	Truck Crane Oiler/Driver: 100 tons and over	$91.25	**7A**	**11H**	**8X**
Power Equipment Operators- Underground Sewer & Water	Truck crane oiler/driver: under 100 tons	$90.55	**7A**	**11H**	**8X**
Power Equipment Operators- Underground Sewer & Water	Truck Mount Portable Conveyor	$92.52	**15J**	**11G**	**8X**
Power Equipment Operators- Underground Sewer & Water	Vac Truck (Vactor Guzzler, Hydro Excavator)	$92.52	**15J**	**11G**	**8X**
Power Equipment Operators- Underground Sewer & Water	Welder	$93.36	**15J**	**11G**	**8X**
Power Equipment Operators- Underground Sewer & Water	Wheel Tractors, Farmall Type	$87.77	**15J**	**11G**	**8X**
Power Equipment Operators- Underground Sewer & Water	Yo Yo Pay Dozer	$92.52	**15J**	**11G**	**8X**
Power Line Clearance Tree Trimmers	Journey Level In Charge	$69.62	**5A**	**4A**	

Power Line Clearance Tree Trimmers	Spray Person	$65.89	**5A**	**4A**
Power Line Clearance Tree Trimmers	Tree Equipment Operator	$69.62	**5A**	**4A**
Power Line Clearance Tree Trimmers	Tree Trimmer	$62.19	**5A**	**4A**
Power Line Clearance Tree Trimmers	Tree Trimmer Groundperson	$45.93	**5A**	**4A**
Refrigeration & Air Conditioning Mechanics	Journey Level	$100.71	**5A**	**1G**
Residential Brick Mason	Journey Level	$22.73		**1**
Residential Carpenters	Journey Level	$37.17		**1**
Residential Cement Masons	Journey Level	$81.36	**15J**	**4U**
Residential Drywall Applicators	Journey Level	$51.52	**15J**	**4C**
Residential Drywall Tapers	Journey Level	$81.31	**5P**	**1E**
Residential Electricians	Journey Level	$48.80		**1**
Residential Glaziers	Journey Level	$33.75		**1**
Residential Insulation Applicators	Journey Level	$37.07		**1**
Residential Laborers	Journey Level	$28.78		**1**
Residential Marble Setters	Journey Level	$39.71		**1**

Residential Painters	Journey Level	$30.60		1
Residential Plumbers & Pipefitters	Journey Level	$51.38		1
Residential Refrigeration & Air Conditioning Mechanics	Journey Level	$107.92	7F	1E
Residential Sheet Metal Workers	Journey Level	$107.92	7F	1E
Residential Soft Floor Layers	Journey Level	$49.91	15J	4C
Residential Sprinkler Fitters (Fire Protection)	Journey Level	$61.85		1
Residential Stone Masons	Journey Level	$39.71		1
Residential Terrazzo Workers	Journey Level	$17.13		1
Residential Terrazzo/Tile Finishers	Journey Level	$27.90		1
Residential Tile Setters	Journey Level	$21.38		1
Roofers	Journey Level	$70.70	5A	3H
Roofers	Using Irritable Bituminous Materials	$74.15	5A	3H
Sheet Metal Workers	Journey Level (Field or Shop)	$107.92	7F	1E

Shipbuilding & Ship Repair	New Construction Boilermaker	$61.07	**7X**	**4J**
Shipbuilding & Ship Repair	New Construction Carpenter	$51.85	**7X**	**4J**
Shipbuilding & Ship Repair	New Construction Crane Operator	$44.29	**7V**	**1**
Shipbuilding & Ship Repair	New Construction Electrician	$61.12	**7X**	**4J**
Shipbuilding & Ship Repair	New Construction Heat & Frost Insulator	$96.42	**15H**	**11C**
Shipbuilding & Ship Repair	New Construction Laborer	$60.73	**7X**	**4J**
Shipbuilding & Ship Repair	New Construction Machinist	$60.93	**7X**	**4J**
Shipbuilding & Ship Repair	New Construction Operating Engineer	$44.29	**7V**	**1**
Shipbuilding & Ship Repair	New Construction Painter	$60.93	**7X**	**4J**
Shipbuilding & Ship Repair	New Construction Pipefitter	$61.21	**7X**	**4J**
Shipbuilding & Ship Repair	New Construction Rigger	$61.07	**7X**	**4J**
Shipbuilding & Ship Repair	New Construction Sheet Metal	$60.94	**7X**	**4J**
Shipbuilding & Ship Repair	New Construction Shipwright	$51.85	**7X**	**4J**

Shipbuilding & Ship Repair	New Construction Warehouse/Teamster	$44.29	**7V**	**1**
Shipbuilding & Ship Repair	New Construction Welder / Burner	$61.07	**7X**	**4J**
Shipbuilding & Ship Repair	Ship Repair Boilermaker	$61.07	**7X**	**4J**
Shipbuilding & Ship Repair	Ship Repair Carpenter	$51.85	**7X**	**4J**
Shipbuilding & Ship Repair	Ship Repair Crane Operator	$45.06	**7Y**	**4K**
Shipbuilding & Ship Repair	Ship Repair Electrician	$61.12	**7X**	**4J**
Shipbuilding & Ship Repair	Ship Repair Heat & Frost Insulator	$96.42	**15H**	**11C**
Shipbuilding & Ship Repair	Ship Repair Laborer	$60.73	**7X**	**4J**
Shipbuilding & Ship Repair	Ship Repair Machinist	$60.93	**7X**	**4J**
Shipbuilding & Ship Repair	Ship Repair Operating Engineer	$45.06	**7Y**	**4K**
Shipbuilding & Ship Repair	Ship Repair Painter	$60.93	**7X**	**4J**
Shipbuilding & Ship Repair	Ship Repair Pipefitter	$61.21	**7X**	**4J**
Shipbuilding & Ship Repair	Ship Repair Rigger	$61.07	**7X**	**4J**
Shipbuilding & Ship Repair	Ship Repair Sheet Metal	$60.94	**7X**	**4J**
Shipbuilding & Ship Repair	Ship Repair Shipwright	$51.85	**7X**	**4J**

Shipbuilding & Ship Repair	Ship Repair Warehouse / Teamster	$45.06	**7Y**	**4K**	
Sign Makers & Installers (Electrical)	Sign Installer	$26.56		**1**	
Sign Makers & Installers (Electrical)	Sign Maker	$20.50		**1**	
Sign Makers & Installers (Non-Electrical)	Sign Installer	$22.56		**1**	
Sign Makers & Installers (Non-Electrical)	Sign Maker	$20.50		**1**	
Soft Floor Layers	Journey Level	$63.29	**15J**	**4C**	
Solar Controls For Windows	Journey Level	$17.13		**1**	
Sprinkler Fitters (Fire Protection)	Journey Level	$104.44	**5C**	**1X**	
Stage Rigging Mechanics (Non Structural)	Journey Level	$17.13		**1**	
Stone Masons	Journey Level	$76.07	**7E**	**1N**	
Street And Parking Lot Sweeper Workers	Journey Level	$17.13		**1**	
Surveyors	Assistant Construction Site Surveyor	$90.55	**7A**	**11H**	**8X**
Surveyors	Chainman	$86.60	**7A**	**11H**	**8X**

Surveyors	Construction Site Surveyor	$92.08	**7A**	**11H**	**8X**
Surveyors	Drone Operator (when used in conjunction with survey work only)	$86.60	**7A**	**11H**	**8X**
Surveyors	Ground Penetrating Radar Operator	$86.60	**7A**	**11H**	**8X**
Telecommunication Technicians	Telecom Technician Journey Level	$62.05	**5B**	**1B**	
Telephone Line Construction - Outside	Cable Splicer	$42.62	**5A**	**2B**	
Telephone Line Construction - Outside	Hole Digger/Ground Person	$27.97	**5A**	**2B**	
Telephone Line Construction - Outside	Telephone Equipment Operator (Light)	$35.60	**5A**	**2B**	
Telephone Line Construction - Outside	Telephone Lineperson	$40.28	**5A**	**2B**	
Terrazzo Workers	Journey Level	$70.61	**7E**	**1N**	
Tile Setters	Journey Level	$68.61	**7E**	**1N**	
Tile, Marble & Terrazzo Finishers	Finisher	$59.44	**7E**	**1N**	
Traffic Control Stripers	All cleanup required in connection with traffic control stripers work (Group 1)	$95.41	**15L**	**1K**	

Traffic Control Stripers	Handling, painting and installing of all car stops, stop signs and any other type sign (Group 2)	$62.69	**15L**	**1K**
Traffic Control Stripers	Installation of guard rail and posts and similar protective devices (Group 2)	$62.69	**15L**	**1K**
Traffic Control Stripers	Installation of parking gates, ticket spitters and other mechanical and automatic control devices (Group 2)	$62.69	**15L**	**1K**
Traffic Control Stripers	Installation of plastic metal or composition button, or lines used instead of paint (Group 1)	$95.41	**15L**	**1K**
Traffic Control Stripers	Line removal; chemical sand and hydro-blast, paint and button (Group 1)	$95.41	**15L**	**1K**
Traffic Control Stripers	Manufacturing and installation of all car stops and control devices and similar traffic regulators (Group 2)	$62.69	**15L**	**1K**
Traffic Control Stripers	Manufacturing, painting, stenciling, servicing, repairing, placing and removal of traffic safety	$62.69	**15L**	**1K**

	and control devices/barricades (Group 2)				
Traffic Control Stripers	Painting and installing lines, arrows, bumpers, curbs, etc., on parking lots, air fields, highways, game courts (Group 1)	$95.41	**15L**	**1K**	
Traffic Control Stripers	Preparation and maintenance of all surfaces (Group 1)	$95.41	**15L**	**1K**	
Traffic Control Stripers	Seal coating, slurry coating and other surface protection (Group 2)	$62.69	**15L**	**1K**	
Truck Drivers	Asphalt Mix Over 16 Yards	$82.95	**15J**	**11M**	**8L**
Truck Drivers	Asphalt Mix To 16 Yards	$82.11	**15J**	**11M**	**8L**
Truck Drivers	Dump Truck	$82.11	**15J**	**11M**	**8L**
Truck Drivers	Dump Truck & Trailer	$82.95	**15J**	**11M**	**8L**
Truck Drivers	Other Trucks	$82.95	**15J**	**11M**	**8L**
Truck Drivers - Ready Mix	Transit Mix	$82.95	**15J**	**11M**	**8L**
Well Drillers & Irrigation Pump Installers	Irrigation Pump Installer	$17.13		**1**	
Well Drillers & Irrigation Pump Installers	Oiler	$17.13		**1**	

Well Drillers & Irrigation Pump Installers	Well Driller	$19.01	**1**

****

Overtime Codes

Overtime calculations are based on the hourly rate actually paid to the worker. On public works projects, the hourly rate must be not less than the prevailing rate of wage minus the hourly rate of the cost of fringe benefits actually provided for the worker.

1. ALL HOURS WORKED IN EXCESS OF EIGHT (8) HOURS PER DAY OR FORTY (40) HOURS PER WEEK SHALL BE PAID AT ONE AND ONE-HALF TIMES THE HOURLY RATE OF WAGE.

B. All hours worked on Saturdays shall be paid at one and one-half times the hourly rate of wage. All hours worked on Sundays and holidays shall be paid at double the hourly rate of wage.

C. The first two (2) hours after eight (8) regular hours Monday through Friday and the first ten (10) hours on Saturday shall be paid at one and one-half times the hourly rate of wage. All other overtime hours and all hours worked on Sundays and holidays shall be paid at double the hourly rate of wage.

D. The first two (2) hours before or after a five-eight (8) hour workweek day or a four-ten (10) hour workweek day and the first eight (8) hours worked the next day after either workweek shall be paid at one and one-half times the hourly rate of wage. All additional hours worked and all worked on Sundays and holidays shall be paid at double the hourly rate of wage.

E. The first two (2) hours after eight (8) regular hours Monday through Friday and the first eight (8) hours on Saturday shall be paid at one and one-half times the hourly rate of wage. All other hours worked Monday through Saturday, and all hours worked on Sundays and holidays shall be paid at double the hourly rate of wage.

F. The first two (2) hours after eight (8) regular hours Monday through Friday and the first ten (10) hours on Saturday shall be paid at one and one-half times the hourly rate of wage. All other overtime hours worked, except Labor Day, shall be paid at double the hourly rate of wage. All hours worked on Labor Day shall be paid at three times the hourly rate of wage.

G. The first ten (10) hours worked on Saturdays and the first ten (10) hours worked on a fifth calendar weekday in a four-ten hour schedule, shall be paid at one and one-half times the hourly rate of wage. All hours worked in excess of ten (10) hours per day Monday through Saturday and all hours worked on Sundays and holidays shall be paid at double the hourly rate of wage.

H. All hours worked on Saturdays (except makeup days if work is lost due to inclement weather conditions or equipment breakdown) shall be paid at one and one-half times the hourly rate of wage. All hours worked Monday through Saturday over twelve (12) hours and all hours worked on Sundays and holidays shall be paid at double the hourly rate of wage.

I. All hours worked on Sundays and holidays shall also be paid at double the hourly rate of wage.

J. The first two (2) hours after eight (8) regular hours Monday through Friday and the first ten (10) hours on Saturday shall be paid at one and one-half times the hourly rate of wage. All hours worked over ten (10) hours Monday through Saturday, Sundays and holidays shall be paid at double the hourly rate of wage.

K. All hours worked on Saturdays and Sundays shall be paid at one and one-half times the hourly rate of wage. All hours worked on holidays shall be paid at double the hourly rate of wage.

M. All hours worked on Saturdays (except makeup days if work is lost due to inclement weather conditions) shall be paid at one and one-half times the hourly rate of wage. All hours worked on Sundays and holidays shall be paid at double the hourly rate of wage.

Overtime Codes Continued

1. N. All hours worked on Saturdays (except makeup days) shall be paid at one and one-half times the hourly rate of wage. All hours worked on Sundays and holidays shall be paid at double the hourly rate of wage.

O. The first ten (10) hours worked on Saturday shall be paid at one and one-half times the hourly rate of wage. All hours worked on Sundays, holidays and after twelve (12) hours, Monday through Friday and after ten (10) hours on Saturday shall be paid at double the hourly rate of wage.

P. All hours worked on Saturdays (except makeup days if circumstances warrant) and Sundays shall be paid at one and one-half times the hourly rate of wage. All hours worked on holidays shall be paid at double the hourly rate of wage.

Q. The first two (2) hours after eight (8) regular hours Monday through Friday and up to ten (10) hours worked on Saturdays shall be paid at one and one-half times the hourly rate of wage. All hours worked in excess of ten (10) hours per day Monday through Saturday and all hours worked on Sundays and holidays (except Christmas day) shall be paid at double the hourly rate of wage. All hours worked on Christmas day shall be paid at two and one-half times the hourly rate of wage.

R. All hours worked on Sundays and holidays shall be paid at two times the hourly rate of wage.

U. All hours worked on Saturdays shall be paid at one and one-half times the hourly rate of wage. All hours worked on Sundays and holidays (except Labor Day) shall be paid at two times the hourly rate of wage. All hours worked on Labor Day shall be paid at three times the hourly rate of wage.

V. All hours worked on Sundays and holidays (except Thanksgiving Day and Christmas day) shall be paid at one and one-half times the hourly rate of wage. All hours worked on Thanksgiving Day and Christmas day shall be paid at double the hourly rate of wage.

X. The first four (4) hours after eight (8) regular hours Monday through Friday and the first twelve (12) hours on Saturday shall be paid at one and one-half times the hourly rate of wage. All hours worked over twelve (12) hours Monday through Saturday, Sundays and holidays shall be paid at double the hourly rate of wage. When holiday falls on Saturday or Sunday, the day before Saturday, Friday, and the day after Sunday, Monday, shall be considered the holiday and all work performed shall be paid at double the hourly rate of wage.

Y. All hours worked outside the hours of 5:00 am and 5:00 pm (or such other hours as may be agreed upon by any employer and the employee) and all hours worked in excess of eight (8) hours per day (10 hours per day for a 4 x 10 workweek) and on Saturdays and holidays (except labor day) shall be paid at one and one-half times the hourly rate of wage. (except for employees who are absent from work without prior approval on a scheduled workday during the workweek shall be paid at the straight-time rate until they have worked 8 hours in a day (10 in a 4 x 10 workweek) or 40 hours during that workweek.) All hours worked Monday through Saturday over twelve (12) hours and all hours worked on Sundays and Labor Day shall be paid at double the hourly rate of wage.

Z. All hours worked on Saturdays and Sundays shall be paid at one and one-half times the hourly rate of wage. All hours worked on holidays shall be paid the straight time rate of pay in addition to holiday pay.

Overtime Codes Continued

2. ALL HOURS WORKED IN EXCESS OF EIGHT (8) HOURS PER DAY OR FORTY (40) HOURS PER WEEK SHALL BE PAID AT ONE AND ONE-HALF TIMES THE HOURLY RATE OF WAGE.

   B. All hours worked on holidays shall be paid at one and one-half times the hourly rate of wage.

   F. The first eight (8) hours worked on holidays shall be paid at the straight hourly rate of wage in addition to the holiday pay. All hours worked in excess of eight (8) hours on holidays shall be paid at double the hourly rate of wage.

   M. This code appears to be missing. All hours worked on Saturdays, Sundays and holidays shall be paid at double the hourly rate of wage.

   R. All hours worked on Sundays and holidays and all hours worked over sixty (60) in one week shall be paid at double the hourly rate of wage.

   U. All hours worked on Saturdays shall be paid at one and one-half times the hourly rate of wage. All hours worked over 12 hours in a day or on Sundays and holidays shall be paid at double the hourly rate of wage.

3. ALL HOURS WORKED IN EXCESS OF EIGHT (8) HOURS PER DAY OR FORTY (40) HOURS PER WEEK SHALL BE PAID AT ONE AND ONE-HALF TIMES THE HOURLY RATE OF WAGE.

   F. All hours worked on Saturday shall be paid at one and one-half times the hourly rate of wage. All hours worked on Sunday shall be paid at two times the hourly rate of wage. All hours worked on paid holidays shall be paid at two and one-half times the hourly rate of wage including holiday pay.

   H. All work performed on Sundays between March 16th and October 14th and all Holidays shall be compensated for at two (2) times the regular rate of pay. Work performed on Sundays between October 15th and March 15th shall be compensated at one and one half (1-1/2) times the regular rate of pay.

   J. All hours worked between the hours of 10:00 pm and 5:00 am, Monday through Friday, and all hours worked on Saturdays shall be paid at a one and one-half times the hourly rate of wage. All hours worked on Sundays and holidays shall be paid at double the hourly rate of wage.

   K. Work performed in excess of eight (8) hours of straight time per day, or ten (10) hours of straight time per day when four ten (10) hour shifts are established, or forty (40) hours of straight time per week, Monday through Friday, or outside the normal 5 am to 6pm shift, and all work on Saturdays shall be paid at one and one-half times the hourly rate of wage. All work performed after 6:00 pm Saturday to 5:00 am Monday and Holidays, and all hours worked in excess of twelve (12) hours in a single shift shall be paid at double the hourly rate of wage.

   After an employee has worked eight (8) hours at an applicable overtime rate, all additional hours shall be at the applicable overtime rate until such time as the employee has had a break of eight (8) hours or more. When an employee returns to work without at least eight (8) hours time off since their previous shift, all such time shall be a continuation of shift and paid at the applicable overtime rate until he/she shall have the eight (8) hours rest period.

Overtime Codes Continued

4. ALL HOURS WORKED IN EXCESS OF EIGHT (8) HOURS PER DAY OR FORTY (40) HOURS PER WEEK SHALL BE PAID AT ONE AND ONE-HALF TIMES THE HOURLY RATE OF WAGE.

A. All hours worked in excess of eight (8) hours per day or forty (40) hours per week shall be paid at double the hourly rate of wage. All hours worked on Saturdays, Sundays and holidays shall be paid at double the hourly rate of wage

C. On Monday through Friday, the first four (4) hours of overtime after eight (8) hours of straight time work shall be paid at one and one half (1-1/2) times the straight time rate of pay, unless a four (4) day ten (10) hour workweek has been established. On a four (4) day ten (10) hour workweek scheduled Monday through Thursday, or Tuesday through Friday, the first two (2) hours of overtime after ten (10) hours of straight time work shall be paid at one and one half (1-1/2) times the straight time rate of pay. On Saturday, the first twelve (12) hours of work shall be paid at one and one half (1-1/2) times the straight time rate of pay, except that if the job is down on Monday through Friday due to weather conditions or other conditions outside the control of the employer, the first ten (10) hours on Saturday may be worked at the straight time rate of pay. All hours worked over twelve (12) hours in a day and all hours worked on Sunday and Holidays shall be paid at two (2) times the straight time rate of pay.

D. All hours worked in excess of eight (8) hours per day or forty (40) hours per week shall be paid at double the hourly rate of wage. All hours worked on Saturday, Sundays and holidays shall be paid at double the hourly rate of pay. Rates include all members of the assigned crew.

EXCEPTION:
On all multipole structures and steel transmission lines, switching stations, regulating, capacitor stations, generating plants, industrial plants, associated installations and substations, except those substations whose primary function is to feed a distribution system, will be paid overtime under the following rates:

The first two (2) hours after eight (8) regular hours Monday through Friday of overtime on a regular workday, shall be paid at one and one-half times the hourly rate of wage. All hours in excess of ten (10) hours will be at two (2) times the hourly rate of wage. The first eight (8) hours worked on Saturday will be paid at one and one-half (1-1/2) times the hourly rate of wage. All hours worked in excess of eight (8) hours on Saturday, and all hours worked on Sundays and holidays will be at the double the hourly rate of wage.

All overtime eligible hours performed on the above described work that is energized, shall be paid at the double the hourly rate of wage.

E. The first two (2) hours after eight (8) regular hours Monday through Friday and the first eight (8) hours on Saturday shall be paid at one and one-half times the hourly rate of wage. All other hours worked Monday through Saturday, and all hours worked on Sundays and holidays shall be paid at double the hourly rate of wage.

On a four-day, ten-hour weekly schedule, either Monday thru Thursday or Tuesday thru Friday schedule, all hours worked after ten shall be paid at double the hourly rate of wage. The Monday or Friday not utilized in the normal four-day, ten hour work week, and Saturday shall be paid at one and one half (1½) times the regular shift rate for the first eight (8) hours. All other hours worked Monday through Saturday, and all hours worked on Sundays and holidays shall be paid at double the hourly rate of wage.

G. All hours worked on Saturdays shall be paid at one and one-half times the hourly rate of wage. All hours worked Monday through Saturday over twelve (12) hours and all hours worked on Sundays and holidays shall be paid at double the hourly rate of wage.

I. The First eight (8) hours worked on Saturdays shall be paid at one and one-half times the hourly rate of wage. All hours worked in excess of eight (8) per day on Saturdays shall be paid at double the hourly rate of wage. All hours worked on Sundays and holidays shall be paid at double the hourly rate of wage.

Overtime Codes Continued

4. J. The first eight (8) hours worked on a Saturday shall be paid at one and one-half times the hourly rate of wage. All hours worked in excess of eight (8) hours on a Saturday shall be paid at double the hourly rate of wage. All hours worked over twelve (12) in a day, and all hours worked on Sundays and Holidays shall be paid at double the hourly rate of wage.

K. All hours worked on a Saturday shall be paid at one and one-half times the hourly rate of wage, so long as Saturday is the sixth consecutive day worked. All hours worked over twelve (12) in a day Monday through Saturday, and all hours worked on Sundays and Holidays shall be paid at double the hourly rate of wage.

L. The first twelve (12) hours worked on a Saturday shall be paid at one and one-half times the hourly rate of wage. All hours worked on a Saturday in excess of twelve (12) hours shall be paid at double the hourly rate of pay. All hours worked over twelve (12) in a day Monday through Friday, and all hours worked on Sundays shall be paid at double the hourly rate of wage. All hours worked on a holiday shall be paid at one and one-half times the hourly rate of wage, except that all hours worked on Labor Day shall be paid at double the hourly rate of pay.

S. On a four (4) day ten (10) hour workweek scheduled Monday through Thursday, or Tuesday through Friday, work performed in excess of (10) hours shall be paid at one and one half (1-1/2) times the hourly rate of pay. On Monday through Friday, work performed outside the normal work hours of 6:00 a.m. and 6:00 p.m. shall be paid at one and one-half (1-1/2) times the straight time rate, (except for special shifts or multiple shift operations).

All hours worked on Saturdays shall be paid at one and one-half times the hourly rate of wage. All work performed on Sundays and holidays shall be paid at double the hourly rate of wage. When an employee returns to work without at least eight (8) hours time off since their previous shift, all such time shall be a continuation of shift and paid at the applicable overtime rate until such time as the employee has had a break of eight (8) hours.

Multiple Shift Operations: When the first shift of a multiple shift (a two or three shift) operation is started at the basic straight time rate or at a specific overtime rate, all shifts of that day's operation shall be completed at that rate. Special Shifts: The Special Shift Premium is the basic hourly rate of pay plus $2.00 an hour. When due to conditions beyond the control of the employer or when an owner (not acting as the contractor), a government agency or the contract specifications require more than four (4) hours of a special shift can only be performed outside the normal 6am to 6pm shift then the special shift premium will be applied to the basic straight time for the entire shift. When an employee works on a special shift, they shall be paid the special shift premium for each hour worked unless they are in overtime or double-time status. (For example, the special shift premium does not waive the overtime requirements for work performed on Saturday or Sunday).

U. The first four (4) hours after eight (8) regular hours Monday through Friday and the first twelve (12) hours on Saturday shall be paid at one and one-half times the hourly rate of wage. (Except on makeup days if work is lost due to inclement weather, then the first eight (8) hours on Saturday may be paid the regular rate.) All hours worked over twelve (12) hours Monday through Saturday, and all hours worked on Sundays and holidays shall be paid at double the hourly rate of wage.

Overtime Codes Continued

4. X. All hours worked on Saturdays shall be paid at one and one-half times the hourly rate of wage. All hours worked on Sundays and holidays shall be paid at double the hourly rate of wage. Work performed outside the normal shift of 6 am to 6pm shall be paid at one and one-half the straight time rate, (except for special shifts or three shift operations). All work performed on Sundays and holidays shall be paid at double the hourly rate of wage. Shifts may be established when considered necessary by the Employer.

The Employer may establish shifts consisting of eight (8) or ten (10) hours of work (subject to WAC 296-127-022), that shall constitute a normal forty (40) hour work week. The Employer can change from a 5-eight to a 4-ten hour schedule or back to the other. All hours of work on these shifts shall be paid for at the straight time hourly rate. Work performed in excess of eight hours (or ten hours per day (subject to WAC 296-127-022) shall be paid at one and one-half the straight time rate.

When due to conditions beyond the control of the Employer, or when contract specifications require that work can only be performed outside the regular day shift, then by mutual agreement a special shift may be worked at the straight time rate, eight (8) hours work for eight (8) hours pay. The starting time shall be arranged to fit such conditions of work.

When an employee returns to work without at a break of eight (8) hours since their previous shift, all such time shall be a continuation of shift and paid at the applicable overtime rate until such time as the employee has had a break of eight (8) hours.

Overtime Codes Continued

11. ALL HOURS WORKED IN EXCESS OF EIGHT (8) HOURS PER DAY OR FORTY (40) HOURS PER WEEK SHALL BE PAID AT ONE AND ONE-HALF TIMES THE HOURLY RATE OF WAGE.

B After an employee has worked eight (8) hours, all additional hours worked shall be paid at the applicable overtime rate until such time as the employee has had a break of eight (8) hours or more.

C The first two (2) hours after eight (8) regular hours Monday through Friday and the first eight (8) hours on Saturday shall be paid at one and one-half times the hourly rate of wage. All other overtime hours worked, except Labor Day, and all hours on Sunday shall be paid at double the hourly rate of wage. All hours worked on Labor Day shall be paid at three times the hourly rate of wage. All non-overtime and non-holiday hours worked between 4:00 pm and 5:00 am, Monday through Friday, shall be paid at a premium rate of 15% over the hourly rate of wage.

D. All hours worked on Saturdays and holidays shall be paid at one and one-half times the hourly rate of wage. All hours worked on Sundays shall be paid at double the hourly rate of wage.

After an employee has worked eight (8) hours, all additional hours worked shall be paid at the applicable overtime rate until such time as the employee has had a break of eight (8) hours or more.

E. The first two (2) hours after eight (8) regular hours Monday through Friday, the first ten (10) hours on Saturday, and the first ten (10) hours worked on Holidays shall be paid at one and one-half times the hourly rate of wage. All hours worked over ten (10) hours Monday through Saturday, and Sundays shall be paid at double the hourly rate of wage.

After an employee has worked eight (8) hours, all additional hours worked shall be paid at the applicable overtime rate until such time as the employee has had a break of eight (8) hours or more.

Overtime Codes Continued

11. F. The first two (2) hours after eight (8) regular hours Monday through Friday and the first eight (8) hours on Saturday shall be paid at one and one-half times the hourly rate of wage. All other hours worked Monday through Saturday, and all hours worked on Sundays and holidays shall be paid at double the hourly rate of wage.

On a four-day, ten-hour weekly schedule, either Monday thru Thursday or Tuesday thru Friday schedule, all hours worked after ten shall be paid at double the hourly rate of wage. The Monday or Friday not utilized in the normal four-day, ten hour work week, and Saturday shall be paid at one-half times the hourly rate of wage for the first eight (8) hours. All other hours worked Monday through Saturday, and all hours worked on Sundays and holidays shall be paid at double the hourly rate of wage.

G. Work performed in excess of eight (8) hours of straight time per day, or ten (10) hours of straight time per day when four ten (10) hour shifts are established, or forty (40) hours of straight time per week, Monday through Friday, or outside the normal 5 am to 6pm shift, and all work on Saturdays shall be paid at one and one-half times the hourly rate of wage.

All work performed after 6:00 pm Saturday to 5:00 am Monday and Holidays, and all hours worked in excess of twelve (12) hours in a single shift shall be paid at double the hourly rate of wage.

After an employee has worked eight (8) hours at an applicable overtime rate, all additional hours shall be at the applicable overtime rate until such time as the employee has had a break of nine (9) hours or more. When an employee returns to work without at least nine (9) hours time off since their previous shift, all such time shall be a continuation of shift and paid at the applicable overtime rate until he/she shall have the nine (9) hours rest period.

H. Work performed in excess of eight (8) hours of straight time per day, or ten (10) hours of straight time per day when four ten (10) hour shifts are established, or forty (40) hours of straight time per week, Monday through Friday, or outside the normal 5 am to 6pm shift, and all work on Saturdays shall be paid at one and one-half times the hourly rate of wage.

All work performed after 6:00 pm Saturday to 5:00 am Monday and Holidays, and all hours worked in excess of twelve (12) hours in a single shift shall be paid at double the hourly rate of wage.

After an employee has worked eight (8) hours at an applicable overtime rate, all additional hours shall be at the applicable overtime rate until such time as the employee has had a break of ten (10) hours or more. When an employee returns to work without at least ten (10) hours time off since their previous shift, all such time shall be a continuation of shift and paid at the applicable overtime rate until he/she shall have the ten (10) hours rest period.

J. All hours worked on holidays shall be paid at double the hourly rate of wage.

K. On Monday through Friday hours worked outside 4:00 am and 5:00 pm, and the first two (2) hours after eight (8) hours worked shall be paid at one and one-half times the hourly rate. All hours worked over 10 hours per day Monday through Friday, and all hours worked on Saturdays, Sundays, and Holidays worked shall be paid at double the hourly rate of wage.

L. An employee working outside 5:00 am and 5:00 pm shall receive an additional two dollar ($2.00) per hour for all hours worked that shift. All hours worked on holidays shall be paid at one and one-half times the hourly rate of wage. All hours worked on holidays shall be paid at one and one-half times the hourly rate of wage.

Overtime Codes Continued

11. M. On Monday through Friday, the first four (4) hours of overtime after eight (8) hours of straight time work shall be paid at one and one half (1-1/2) times the straight time rate of pay, unless a four (4) day ten (10) hour workweek has been established. On a four (4) day ten (10) hour workweek scheduled Monday through Thursday, or Tuesday through Friday, the first two (2) hours of overtime after ten (10) hours of straight time work shall be paid at one and one half (1-1/2) times the straight time rate of pay.

Work performed outside the normal work hours of 5:00 a.m. and 6:00 p.m. shall be paid at one and one-half (1-1/2) times the straight time rate, (except for special shifts or multiple shift operations). When the first shift of a multiple shift (a two or three shift) operation is started at the basic straight time rate or at a specific overtime rate, all shifts of that day's operation shall be completed at that rate. When due to conditions beyond the control of the Employer or when contract specifications require that work can only be performed outside the regular day shift of 5:00 am to 6:00 pm, then a special shift may be worked at the straight time rate, plus the shift pay premium when applicable. The starting time of work will be arranged to fit such conditions of work. Such shift shall consist of eight (8) hours work for eight (8) hours pay or ten (10) hours work for ten (10) hours pay for four ten shifts.

On Saturday, the first twelve (12) hours of work shall be paid at one and one half (1-1/2) times the straight time rate of pay. All work performed after 6:00 pm Saturday to 5:00 am Monday, all work performed over twelve (12) hours, and all work performed on holidays shall be paid at double the straight time rate of pay.

Shift Pay Premium: In an addition to any overtime already required, all hours worked between the hours of 6:00 pm and 5:00 am shall receive an additional two dollars ($2.00) per hour.

N. All work performed over twelve hours in a shift and all work performed on Sundays and Holidays shall be paid at double the straight time rate.

Any time worked over eight (8) hours on Saturday shall be paid double the straight time rate, except employees assigned to work six 10-hour shifts per week shall be paid double the straight time rate for any time worked on Saturday over 10 hours.

O. All work performed on Saturdays, Sundays, and Holidays shall be paid at one and one half (1-1/2) times the straight time rate of pay.

Overtime Codes Continued

11. P. Work performed in excess of ten (10) hours of straight time per day when four ten (10) hour shifts are established and all work on Saturdays, except for make-up days shall be paid at time and one-half (1 ½) the straight time rate.

Work performed outside the normal work hours of 5:00 a.m. and 6:00 p.m. shall be paid at one and one-half (1-1/2) times the straight time rate, (except for special shifts or multiple shift operations). When the first shift of multiple shift (a two or three shift) operation is started at the basic straight time rate or at a specific overtime rate, all shifts of that day's operation shall be completed at that rate. When due to conditions beyond the control of the Employer or when contract specifications require that work can only be performed outside the regular day shift of 5:00 a.m. to 6:00 p.m., then a special shift may be worked at the straight time rate, plus the shift pay premium when applicable. The starting time of work will be arranged to fit such conditions of work. Such shifts shall consist of eight (8) hours work for eight (8) hours pay or ten (10) hours work for ten (10) hours pay for four ten-hour shifts.

In the event the job is down due to weather conditions, then Saturday may, be worked as a voluntary make-up day at the straight time rate. However, Saturday shall not be utilized as a make-up day when a holiday falls on Friday. All work performed on Sundays and holidays and work in excess of twelve (12) hours per day shall be paid at double (2x) the straight time rate of pay.

After an employee has worked eight (8) hours at an applicable overtime rate, all additional hours shall be at the applicable overtime rate until such time as the employee has had a break of eight (8) hours.

When an employee returns to work without a break of eight (8) hours since their previous shift, all such time shall be a continuation of shift and paid at the applicable overtime rate until such time as the employee has had a break of eight (8) hours.

Q. All hours worked between the hours of 6:00 pm and 6:00 am, Monday through Saturday, shall be paid at a premium rate of 35% over the hourly rate of wage. Work performed on Sundays shall be paid at double time. All hours worked on holidays shall be paid at double the hourly rate of wage.

R On Monday through Saturday hours worked outside 6:00 am and 7:00 pm, and all hours after eight (8) hours worked shall be paid at one and one-half times the hourly rate. All hours worked on Sundays and Holidays shall be paid at double the hourly rate of wage.

When a holiday falls on a Saturday, the Friday before shall be the observed holiday. When a holiday falls on a Sunday, the following Monday shall be the observed holiday.

S. The first ten (10) hours worked on Saturdays shall be paid at one and one-half times the hourly rate of wage. In the event the job is down due to weather conditions, or other conditions beyond the control of the Employer, then Saturday may be worked at the straight time rate, for the first eight (8) hours, or the first ten (10) hours when a four day ten hour workweek has been established.

All hours worked Monday through Saturday over twelve (12) hours and all hours worked on Sundays and holidays shall be paid at double the hourly rate of wage.

When an employee returns to work without a break of eight (8) hours since their previous shift, all such time shall be a continuation of shift and paid at the applicable overtime rate until such time as the employee has had a break of eight (8) hours.

Overtime Codes Continued

11. T. On Monday through Friday, the first four (4) hours of overtime after eight (8) hours of straight time work shall be paid at one and one half (1-1/2) times the straight time rate of pay, unless a four (4) day ten (10) hour workweek has been established. On a four (4) day ten (10) hour workweek scheduled Monday through Thursday, or Tuesday through Friday, the first two (2) hours of overtime after ten (10) hours of straight time work shall be paid at one and one half (1-1/2) times the straight time rate of pay.

On Saturday, the first twelve (12) hours of work shall be paid at one and one half (1-1/2) times the straight time rate of pay, except that if the job is down on Monday through Friday due to weather conditions or other conditions outside the control of the employer, the first ten (10) hours on Saturday may be worked at the straight time rate of pay.

All hours worked over twelve (12) hours in a day and all hours worked on Sunday and Holidays shall be paid at two (2) times the straight time rate of pay.

U. On Monday through Friday, the first four (4) hours of overtime after eight (8) hours of straight time work shall be paid at one and one half (1-1/2) times the straight time rate of pay, unless a four (4) day ten (10) hour workweek has been established. On a four (4) day ten (10) hour workweek scheduled Monday through Thursday, or Tuesday through Friday, the first two (2) hours of overtime after ten (10) hours of straight time work shall be paid at one and one half (1-1/2) times the straight time rate of pay.

On Saturday, the first twelve (12) hours of work shall be paid at one and one half (1-1/2) times the straight time rate of pay, except that if the job is down on Monday through Friday due to weather conditions or other conditions outside the control of the employer, the first ten (10) hours on Saturday may be worked at the straight time rate of pay.

All hours worked over twelve (12) hours in a day and all hours worked on Sunday and Holidays shall be paid at two (2) times the straight time rate of pay.

If, due to conditions beyond the control of the Employer or when contract specifications require that work can only be performed outside the regular day shift, then a Special Shift may be worked, Monday through Friday, at the straight-time rate. The starting time of work for the Special Shift will be arranged to fit such conditions of work. Such Special Shift shall consist of eight (8) hours of work for eight (8) hours of pay or ten (10) hours of work for ten(10) hours of pay on a four-ten workday schedule.

V. All hours worked on Saturdays and Sundays (except make-up days due to conditions beyond the control of the employer) shall be paid at one and one-half times the hourly rate of wage. All hours worked on holidays shall be paid at double the hourly rate of wage.

W. Work performed in excess of eight (8) hours of straight time per day, or ten (10) hours of straight time per day when four ten (10) hour shifts are established, or forty (40) hours of straight time per week, Monday through Friday, or outside the normal 6 am to 6pm shift, and all work on Saturdays shall be paid at one and one-half times the hourly rate of wage. All work performed on Sundays and Holidays shall be paid at double the hourly rate of wage.

After an employee has worked eight (8) hours at an applicable overtime rate, all additional hours shall be at the applicable overtime rate until such time as the employee has had a break of eight (8) hours or more.

When an employee returns to work without at least eight (8) hours time off since their previous shift, all such time shall be a continuation of shift and paid at the applicable overtime rate until he/she shall have the eight (8) hours rest period.

Holiday Codes

5.

A. Holidays: New Year's Day, Memorial Day, Independence Day, Labor Day, Thanksgiving Day, Friday after Thanksgiving Day, and Christmas Day (7).

B. Holidays: New Year's Day, Memorial Day, Independence Day, Labor Day, Thanksgiving Day, Friday after Thanksgiving Day, the day before Christmas, and Christmas Day (8).

C. Holidays: New Year's Day, Presidents' Day, Memorial Day, Independence Day, Labor Day, Thanksgiving Day, the Friday after Thanksgiving Day, And Christmas Day (8).

D. Holidays: New Year's Day, Memorial Day, Independence Day, Labor Day, Thanksgiving Day, the Friday and Saturday after Thanksgiving Day, And Christmas Day (8).

H. Holidays: New Year's Day, Memorial Day, Independence Day, Thanksgiving Day, the Day after Thanksgiving Day, And Christmas (6).

I. Holidays: New Year's Day, Memorial Day, Independence Day, Labor Day, Thanksgiving Day, and Christmas Day (6).

K. Holidays: New Year's Day, Presidents' Day, Memorial Day, Independence Day, Labor Day, Thanksgiving Day, Friday After Thanksgiving Day, The Day Before Christmas, And Christmas Day (9).

L. Holidays: New Year's Day, Martin Luther King Jr. Day, Memorial Day, Independence Day, Labor Day, Thanksgiving Day, Friday after Thanksgiving Day, And Christmas Day (8).

N. Holidays: New Year's Day, Presidents' Day, Memorial Day, Independence Day, Labor Day, Veterans' Day, Thanksgiving Day, The Friday After Thanksgiving Day, And Christmas Day (9).

P. Holidays: New Year's Day, Memorial Day, Independence Day, Labor Day, Thanksgiving Day, Friday And Saturday After Thanksgiving Day, The Day Before Christmas, And Christmas Day (9). If A Holiday Falls On Sunday, The Following Monday Shall Be Considered As A Holiday.

Q. Paid Holidays: New Year's Day, Memorial Day, Independence Day, Labor Day, Thanksgiving Day, and Christmas Day (6).

R. Paid Holidays: New Year's Day, Memorial Day, Independence Day, Labor Day, Thanksgiving Day, Day After Thanksgiving Day, One-Half Day Before Christmas Day, And Christmas Day. (7 1/2).

S. Paid Holidays: New Year's Day, Presidents' Day, Memorial Day, Independence Day, Labor Day, Thanksgiving Day, And Christmas Day (7).

Z. Holidays: New Year's Day, Memorial Day, Independence Day, Labor Day, Veterans Day, Thanksgiving Day, the Friday after Thanksgiving Day, And Christmas Day (8).

Holiday Codes Continued

6. G. Paid Holidays: New Year's Day, Martin Luther King Jr. Day, Presidents' Day, Memorial Day, Independence Day, Labor Day, Veterans' Day, Thanksgiving Day, the Friday after Thanksgiving Day, Christmas Day, and Christmas Eve Day (11).

H. Paid Holidays: New Year's Day, New Year's Eve Day, Memorial Day, Independence Day, Labor Day, Thanksgiving Day, Friday After Thanksgiving Day, Christmas Day, The Day After Christmas, And A Floating Holiday (10).

T. Paid Holidays: New Year's Day, Presidents' Day, Memorial Day, Independence Day, Labor Day, Thanksgiving Day, The Friday After Thanksgiving Day, The Last Working Day Before Christmas Day, And Christmas Day (9).

Z. Holidays: New Year's Day, Memorial Day, Independence Day, Labor Day, Thanksgiving Day, Friday after Thanksgiving Day, And Christmas Day (7). If a holiday falls on Saturday, the preceding Friday shall be considered as the holiday. If a holiday falls on Sunday, the following Monday shall be considered as the holiday.

Holiday Codes Continued

7. A. Holidays: New Year's Day, Memorial Day, Independence Day, Labor Day, Thanksgiving Day, the Friday and Saturday after Thanksgiving Day, And Christmas Day (8). Any Holiday Which Falls On A Sunday Shall Be Observed As A Holiday On The Following Monday. If any of the listed holidays falls on a Saturday, the preceding Friday shall be a regular work day.

B. Holidays: New Year's Day, Memorial Day, Independence Day, Labor Day, Thanksgiving Day, the Friday and Saturday after Thanksgiving Day, And Christmas Day (8). Any holiday which falls on a Sunday shall be observed as a holiday on the following Monday. Any holiday which falls on a Saturday shall be observed as a holiday on the preceding Friday.

C. Holidays: New Year's Day, Martin Luther King Jr. Day, Memorial Day, Independence Day, Labor Day, Thanksgiving Day, the Friday after Thanksgiving Day, And Christmas Day (8). Any holiday which falls on a Sunday shall be observed as a holiday on the following Monday. Any holiday which falls on a Saturday shall be observed as a holiday on the preceding Friday.

D. Paid Holidays: New Year's Day, Memorial Day, Independence Day, Labor Day, Veteran's Day, Thanksgiving Day, the Friday after Thanksgiving Day, And Christmas Day (8). Unpaid Holidays: President's Day. Any paid holiday which falls on a Sunday shall be observed as a holiday on the following Monday. Any paid holiday which falls on a Saturday shall be observed as a holiday on the preceding Friday.

E. Holidays: New Year's Day, Memorial Day, Independence Day, Labor Day, Thanksgiving Day, the Friday after Thanksgiving Day, And Christmas Day (7). Any holiday which falls on a Sunday shall be observed as a holiday on the following Monday. Any holiday which falls on a Saturday shall be observed as a holiday on the preceding Friday.

F. Holidays: New Year's Day, Memorial Day, Independence Day, Labor Day, Thanksgiving Day, the Friday after Thanksgiving Day, the last working day before Christmas day and Christmas day (8). Any holiday which falls on a Sunday shall be observed as a holiday on the following Monday. Any holiday which falls on a Saturday shall be observed as a holiday on the preceding Friday.

Holiday Codes Continued

7. G. Holidays: New Year's Day, Memorial Day, Independence Day, Labor Day, Thanksgiving Day, and Christmas Day (6). Any holiday which falls on a Sunday shall be observed as a holiday on the following Monday.

H. Holidays: New Year's Day, Martin Luther King Jr. Day, Independence Day, Memorial Day, Labor Day, Thanksgiving Day, the Friday after Thanksgiving Day, the Last Working Day before Christmas Day and Christmas Day (9). Any holiday which falls on a Sunday shall be observed as a holiday on the following Monday. Any holiday which falls on a Saturday shall be observed as a holiday on the preceding Friday.

I. Holidays: New Year's Day, President's Day, Independence Day, Memorial Day, Labor Day, Thanksgiving Day, The Friday After Thanksgiving Day, The Day Before Christmas Day And Christmas Day (9). Any holiday which falls on a Sunday shall be observed as a holiday on the following Monday. Any holiday which falls on a Saturday shall be observed as a holiday on the preceding Friday.

J. Holidays: New Year's Day, Independence Day, Memorial Day, Labor Day, Thanksgiving Day and Christmas Day (6). Any holiday which falls on a Sunday shall be observed as a holiday on the following Monday. Any holiday which falls on a Saturday shall be observed as a holiday on the preceding Friday.

K. Holidays: New Year's Day, Memorial Day, Independence Day, Thanksgiving Day, the Friday and Saturday after Thanksgiving Day, And Christmas Day (8). Any holiday which falls on a Sunday shall be observed as a holiday on the following Monday. Any holiday which falls on a Saturday shall be observed as a holiday on the preceding Friday.

L. Holidays: New Year's Day, Memorial Day, Labor Day, Independence Day, Thanksgiving Day, the Last Work Day before Christmas Day, And Christmas Day (7). Any holiday which falls on a Sunday shall be observed as a holiday on the following Monday. Any holiday which falls on a Saturday shall be observed as a holiday on the preceding Friday.

N. Holidays: New Year's Day, Memorial Day, Independence Day, Labor Day, Thanksgiving Day, the Friday after Thanksgiving Day, And Christmas Day (7). Any holiday which falls on a Sunday shall be observed as a holiday on the following Monday. When Christmas falls on a Saturday, the preceding Friday shall be observed as a holiday.

P. Holidays: New Year's Day, Memorial Day, Independence Day, Labor Day, Thanksgiving Day, Friday after Thanksgiving Day, And Christmas Day (7). Any holiday which falls on a Sunday shall be observed as a holiday on the following Monday.

Q. Holidays: New Year's Day, Memorial Day, Independence Day, Labor Day, Thanksgiving Day, the Friday after Thanksgiving Day, the Last Working Day before Christmas Day and Christmas Day (8). Any holiday which falls on a Sunday shall be observed as a holiday on the following Monday. If any of the listed holidays falls on a Saturday, the preceding Friday shall be a regular work day.

S. Paid Holidays: New Year's Day, Memorial Day, Independence Day, Labor Day, Thanksgiving Day, Friday after Thanksgiving Day, Christmas Day, the Day after Christmas, and A Floating Holiday (9). If any of the listed holidays falls on a Sunday, the day observed by the Nation shall be considered a holiday and compensated accordingly.

V. Holidays: New Year's Day, President's Birthday, Memorial Day, Independence Day, Labor Day, Thanksgiving Day, the Friday after Thanksgiving Day, Christmas Day, the day before or after Christmas, and the day before or after New Year's Day. If any of the above listed holidays falls on a Sunday, the day observed by the Nation shall be considered a holiday and compensated accordingly.

W. Holidays: New Year's Day, Day After New Year's, Memorial Day, Independence Day, Labor Day, Thanksgiving Day, the Friday after Thanksgiving Day, Christmas Eve Day, Christmas Day, the day after Christmas, the day before New Year's Day, and a Floating Holiday.

Holiday Codes Continued

7. X. Holidays: New Year's Day, Day before or after New Year's Day, Presidents' Day, Memorial Day, Independence Day, Labor Day, Thanksgiving Day, the Friday after Thanksgiving Day, Christmas Day, and the day before or after Christmas day. If a holiday falls on a Saturday or on a Friday that is the normal day off, then the holiday will be taken on the last normal workday. If the holiday falls on a Monday that is the normal day off or on a Sunday, then the holiday will be taken on the next normal workday.

Y. Holidays: New Year's Day, Presidents' Day, Memorial Day, Independence Day, Labor Day, Thanksgiving Day, the Friday after Thanksgiving Day, and Christmas Day. (8) If the holiday falls on a Sunday, then the day observed by the federal government shall be considered a holiday and compensated accordingly.

Z. Holidays: New Year's Day, Memorial Day, Independence Day, Labor Day, Thanksgiving Day, the Friday and Saturday after Thanksgiving Day, Christmas Eve, and Christmas Day (9). Any holiday which falls on a Saturday shall be observed as a holiday on the preceding Friday. Any holiday which falls on a Sunday shall be observed as a holiday on the following Monday.

Holiday Codes Continued

15. G. New Year's Day, Washington's Birthday, Memorial Day, Independence Day, Labor Day, Thanksgiving Day, The Friday After Thanksgiving Day, the last scheduled workday before Christmas, and Christmas Day (9). If any of the listed holidays falls on a Sunday, the day observed by the Nation shall be considered a holiday and compensated accordingly.

H. Holidays: New Year's Day, Martin Luther King Jr. Day, Independence Day, Memorial Day, Labor Day, Thanksgiving Day, the Friday after Thanksgiving Day, the Last Working Day before Christmas Day and Christmas Day (9). Any holiday which falls on a Sunday shall be observed as a holiday on the following Monday. Any holiday which falls on a Saturday shall be observed as a holiday on the preceding Friday.

I. Holidays: New Year's Day, President's Day, Independence Day, Memorial Day, Labor Day, Thanksgiving Day, The Friday After Thanksgiving Day, The Day Before Christmas Day And Christmas Day (9). Any holiday which falls on a Sunday shall be observed as a holiday on the following Monday. Any holiday which falls on a Saturday shall be observed as a holiday on the preceding Friday.

J. Holidays: New Year's Day, Martin Luther King Jr. Day, Memorial Day, Independence Day, Labor Day, Thanksgiving Day, the Friday and Saturday after Thanksgiving Day, and Christmas Day (9). Any holiday which falls on a Sunday shall be observed as a holiday on the following Monday. If any of the listed holidays falls on a Saturday, the preceding Friday shall be a regular work day.

K. Holidays: New Year's Day, Memorial Day, Independence Day, Thanksgiving Day, the Friday and Saturday after Thanksgiving Day, And Christmas Day (8). Any holiday which falls on a Sunday shall be observed as a holiday on the following Monday. Any holiday which falls on a Saturday shall be observed as a holiday on the preceding Friday.

L. Holidays: New Year's Day, Memorial Day, Independence Day, Labor Day, Veteran's Day, Thanksgiving Day, the Friday after Thanksgiving Day, and Christmas Day (8). Any holiday which falls on a Sunday shall be observed as a holiday on the following Monday. If any of the listed holidays falls on a Saturday, the preceding Friday shall be a regular work day.

M. Holidays: New Year's Day, Martin Luther King Jr. Day, Independence Day, Memorial Day, Labor Day, Thanksgiving Day, the Friday after Thanksgiving Day, Christmas Eve Day and Christmas Day (9). Any holiday which falls on a Sunday shall be observed as a holiday on the following Monday. If any of the listed holidays falls on a Saturday, the preceding Friday shall be a regular work day.

Holiday Codes Continued

15. N. Holidays: New Year's Day, Memorial Day, Independence Day, Labor Day, Veteran's Day, Thanksgiving Day, the Friday after Thanksgiving Day, and Christmas Day (8). Any holiday which falls on a Sunday shall be observed as a holiday on the following Monday.

O. Holidays: New Year's Day, Martin Luther King Jr. Day, Memorial Day, Independence Day, Labor Day, Thanksgiving Day, the Friday and Saturday after Thanksgiving Day, the day before Christmas day, and Christmas Day (10). Any holiday which falls on a Sunday shall be observed as a holiday on the following Monday.

P. Holidays: New Year's Day, Memorial Day, Labor Day, Independence Day, Thanksgiving Day, the Friday after Thanksgiving Day, Christmas Eve Day, And Christmas Day (8). Any holiday which falls on a Sunday shall be observed as a holiday on the following Monday. Any holiday which falls on a Saturday shall be observed as a holiday on the preceding Friday.

Note Codes

8. D. Workers working with supplied air on hazmat projects receive an additional $1.00 per hour.

L. Workers on hazmat projects receive additional hourly premiums as follows -Level A: $0.75, Level B: $0.50, And Level C: $0.25.

M. Workers on hazmat projects receive additional hourly premiums as follows: Levels A & B: $1.00, Levels C & D: $0.50.

N. Workers on hazmat projects receive additional hourly premiums as follows -Level A: $1.00, Level B: $0.75, Level C: $0.50, And Level D: $0.25.

S. Effective August 31, 2012 – A Traffic Control Supervisor shall be present on the project whenever flagging or spotting or other traffic control labor is being utilized. Flaggers and Spotters shall be posted where shown on approved Traffic Control Plans or where directed by the Engineer. All flaggers and spotters shall possess a current flagging card issued by the State of Washington, Oregon, Montana, or Idaho. This classification is only effective on or after August 31, 2012.

T. Effective August 31, 2012 – A Traffic Control Laborer performs the setup, maintenance and removal of all temporary traffic control devices and construction signs necessary to control vehicular, bicycle, and pedestrian traffic during construction operations. Flaggers and Spotters shall be posted where shown on approved Traffic Control Plans or where directed by the Engineer. All flaggers and spotters shall possess a current flagging card issued by the State of Washington, Oregon, Montana, or Idaho. This classification is only effective on or after August 31, 2012.

U. Workers on hazmat projects receive additional hourly premiums as follows – Class A Suit: $2.00, Class B Suit: $1.50, And Class C Suit: $1.00. Workers performing underground work receive an additional $0.40 per hour for any and all work performed underground, including operating, servicing and repairing of equipment. The premium for underground work shall be paid for the entire shift worked. Workers who work suspended by a rope or cable receive an additional $0.50 per hour. The premium for work suspended shall be paid for the entire shift worked. Workers who do "pioneer" work (break open a cut, build road, etc.) more than one hundred fifty (150) feet above grade elevation receive an additional $0.50 per hour.

Note Codes Continued

8. V. In addition to the hourly wage and fringe benefits, the following depth and enclosure premiums shall be paid. The premiums are to be calculated for the maximum depth and distance into an enclosure that a diver reaches in a day. The premiums are to be paid one time for the day and are not used in calculating overtime pay.

Depth premiums apply to depths of fifty feet or more. Over 50' to 100' - $2.00 per foot for each foot over 50 feet. Over 101' to 150' - $3.00 per foot for each foot over 101 feet. Over 151' to 220' - $4.00 per foot for each foot over 220 feet. Over 221' - $5.00 per foot for each foot over 221 feet.

Enclosure premiums apply when divers enter enclosures (such as pipes or tunnels) where there is no vertical ascent and is measured by the distance travelled from the entrance. 25’ to 300’ - $1.00 per foot from entrance. 300’ to 600’ - $1.50 per foot beginning at 300’. Over 600’ - $2.00 per foot beginning at 600’.

W. Meter Installers work on single phase 120/240V self-contained residential meters. The Lineman/Groundmen rates would apply to meters not fitting this description.

X. Workers on hazmat projects receive additional hourly premiums as follows - Class A Suit: $2.00, Class B Suit: $1.50, Class C Suit: $1.00, and Class D Suit: $0.50. Special Shift Premium: Basic hourly rate plus $2.00 per hour.

When due to conditions beyond the control of the Employer or when an owner (not acting as the contractor), a government agency or the contract specifications requires that work can only be performed outside the normal 5 am to 6pm shift, then the special shift premium will be applied to the basic hourly rate. When an employee works on a special shift, they shall be paid a special shift premium for each hour worked unless they are in OT or Double-time status. (For example, the special shift premium does not waive the overtime requirements for work performed on Saturday or Sunday.)

Y. Tide Work: When employees are called out between the hours of 6:00 p.m. and 6:00 a.m. to work on tide work (work located in the tide plane) all time worked shall be at one and one-half times the hourly rate of pay.

Swinging Stage/Boatswains Chair: Employees working on a swinging state or boatswains chair or under conditions that require them to be tied off to allow their hands to be free shall receive seventy-five cents ($0.75) per hour above the classification rate.

Z. Workers working with supplied air on hazmat projects receive an additional $1.00 per hour.

Special Shift Premium: Basic hourly rate plus $2.00 per hour. When due to conditions beyond the control of the Employer or when an owner (not acting as a contractor), a government agency or the contract specifications require that more than (4) hours of a special shift can only be performed outside the normal 6 am to 6pm shift, then the special shift premium will be applied to the basic straight time for the entire shift. When an employee works on a special shift, they will be paid a special shift premium for each hour worked unless they are in overtime or double-time status. (For example, the special shift premium does not waive the overtime requirements for work performed on Saturday or Sunday.)

Note Codes Continued

9. A. Workers working with supplied air on hazmat projects receive an additional $1.00 per hour.

Special Shift Premium: Basic hourly rate plus $2.00 per hour. When due to conditions beyond the control of the Employer or when an owner (not acting as the contractor), a government agency or the contract specifications require that more than four (4) hours of a special shift can only be performed outside the normal 6 am to 6pm shift, then the special shift premium will be applied to the basic straight time for the entire shift. When an employee works on a special shift, they shall be paid a special shift premium for each hour worked unless they are in overtime or double-time status. (For example, the special shift premium does not waive the overtime requirements for work performed on Saturday or Sunday.)

Certified Crane Operator Premium: Crane operators requiring certifications shall be paid $0.50 per hour above their classification rate.

Boom Pay Premium: All cranes including tower shall be paid as follows based on boom length:

(A) – 130' to 199' – $0.50 per hour over their classification rate.
(B) – 200' to 299' – $0.80 per hour over their classification rate.
(C) – 300' and over – $1.00 per hour over their classification rate.

B. The highest pressure registered on the gauge for an accumulated time of more than fifteen (15) minutes during the shift shall be used in determining the scale paid.

Tide Work: When employees are called out between the hours of 6:00 p.m. and 6:00 a.m. to work on tide work (work located in the tide plane) all time worked shall be at one and one-half times the hourly rate of pay. Swinging Stage/Boatswains Chair: Employees working on a swinging stage or boatswains chair or under conditions that require them to be tied off to allow their hands to be free shall receive seventy-five cents ($0.75) per hour above the classification rate.

C. Tide Work: When employees are called out between the hours of 6:00 p.m. and 6:00 a.m. to work on tide work (work located in the tide plane) all time worked shall be at one and one-half times the hourly rate of pay. Swinging Stage/Boatswains Chair: Employees working on a swinging stage or boatswains chair or under conditions that require them to be tied off to allow their hands to be free shall receive seventy-five cents ($0.75) per hour above the classification rate.

Effective August 31, 2012 – A Traffic Control Supervisor shall be present on the project whenever flagging or spotting or other traffic control labor is being utilized. A Traffic Control Laborer performs the setup, maintenance and removal of all temporary traffic control devices and construction signs necessary to control vehicular, bicycle, and pedestrian traffic during construction operations. Flaggers and Spotters shall be posted where shown on approved Traffic Control Plans or where directed by the Engineer. All flaggers and spotters shall possess a current flagging card issued by the State of Washington, Oregon, Montana, or Idaho. These classifications are only effective on or after August 31, 2012.

D. Industrial Painter wages are required for painting within industrial facilities such as treatment plants, pipelines, towers, dams, bridges, power generation facilities and manufacturing facilities such as chemical plants, etc., or anywhere abrasive blasting is necessary to prepare surfaces, or hazardous materials encapsulation is required.

E. Heavy Construction includes construction, repair, alteration or additions to the production, fabrication or manufacturing portions of industrial or manufacturing plants, hydroelectric or nuclear power plants and atomic reactor construction. Workers on hazmat projects receive additional hourly premiums as follows -Level A: $1.00, Level B: $0.75, Level C: $0.50, And Level D: $0.25.

Note Codes Continued

9. F. Industrial Painter wages are required for painting within industrial facilities such as treatment plants, pipelines, towers, dams, power generation facilities and manufacturing facilities such as chemical plants, etc., or anywhere abrasive blasting is necessary to prepare surfaces, or hazardous materials encapsulation is required.

H. One (1) person crew shall consist of a Party Chief. (Total Station or similar one (1) person survey system). Two (2) person survey party shall consist of a least a Party Chief and a Chain Person. Three (3) person survey party shall consist of at least a Party Chief, an Instrument Person, and a Chain Person.

I. In addition to the hourly wage and fringe benefits, the following depth and enclosure premiums shall be paid. The premiums are to be calculated for the maximum depth and distance into an enclosure that a diver reaches in a day. The premiums are to be paid one time for the day and are not used in calculating overtime pay.

Depth premiums apply to depths of fifty feet or more. Over 50' to 100' - $2.00 per foot for each foot over 50 feet. Over 101' to 150' - $3.00 per foot for each foot over 101 feet. Over 151' to 220' - $4.00 per foot for each foot over 220 feet. Over 221' - $5.00 per foot for each foot over 221 feet.

Enclosure premiums apply when divers enter enclosures (such as pipes or tunnels) where there is no vertical ascent and is measured by the distance travelled from the entrance. 25’ to 300’ - $1.00 per foot from entrance. 300’ to 600’ - $1.50 per foot beginning at 300’. Over 600’ - $2.00 per foot beginning at 600’.

Employees may be required to perform any combination of work within the Diving team/crew, (with the exception of dive Supervisor) provided they are paid at the highest rate at which he/she has worked for the shift.

L. Workers on hazmat projects receive additional hourly premiums as follows -Level A: $0.75, Level B: $0.50, And Level C: $0.25.

Tide Work: When employees are called out between the hours of 6:00 p.m. and 6:00 a.m. to work on tide work (work located in the tide plane) all time worked shall be at one and one-half times the hourly rate of pay.

Swinging Stage/Boatswains Chair: Employees working on a swinging stage or boatswains chair or under conditions that require them to be tied off to allow their hands to be free shall receive seventy-five cents ($0.75) per hour above the classification rate.

M. Certified Crane Operator Premium: Crane operators requiring certifications shall be paid $1.50 per hour above their classification rate.

Workers on hazmat projects receive additional hourly premiums as follows - Class A Suit: $2.00, Class B Suit: $1.50, Class C Suit: $1.00, and Class D Suit: $0.50.

Special Shift Premium: Basic hourly rate plus $2.00 per hour. When due to conditions beyond the control of the Employer or when an owner (not acting as the contractor), a government agency or the contract specifications requires that work can only be performed outside the normal 6 am to 6pm shift, then the special shift premium will be applied to the basic hourly rate. When an employee works on a special shift, they shall be paid a special shift premium for each hour worked unless they are in OT or Double-time status. (For example, the special shift premium does not waive the overtime requirements for work performed on Saturday or Sunday.)

ADMINISTRATIVE POLICY
STATE OF WASHINGTON
DEPARTMENT OF LABOR AND INDUSTRIES
PREVAILING WAGE

TITLE: TRAVEL TIME FOR PUBLIC WORKS PROJECTS **NUMBER: PW.A.1**

CHAPTER: RCW 39.04; 39.12; 39.12.010; 39.12.020; 39.12.030; 49.46
WAC 296-127-010; 296-127-013; 296-127-018; 296-127-020

ISSUED: 12/09/2024

SEE ALSO ES.C.2

ADMINISTRATIVE POLICY DISCLAIMER

This policy is designed to provide general information in regard to the current opinions of the Department of Labor & Industries on the subject matter covered. This policy is intended as a guide in the interpretation and application of the relevant statutes, regulations, and policies, and may not be applicable to all situations. This policy does not replace applicable RCW or WAC standards. If additional clarification is required, the Program Manager for Prevailing Wage should be consulted.

This document is effective as of the date of print and supersedes all previous interpretations and guidelines. Changes may occur after the date of print due to subsequent legislation, administrative rule, or judicial proceedings. The user is encouraged to notify the Program Manager to provide or receive updated information. This document will remain in effect until rescinded, modified, or withdrawn by the Director or his or her designee.

This policy provides guidance on prevailing wage requirements during travel time. This guidance is based on the Prevailing Wages on Public Works Act, RCW 39.12, Minimum Wage Act, RCW 49.46, and applicable Washington Administrative Codes (WACs).

1. Prevailing Wage May Be Required for Time Spent Traveling Related to the Public Works Project.

Employers must look to both the Minimum Wage Act and Prevailing Wage Act to determine whether travel time is compensable and if so, whether prevailing wage must be paid for this work related to a public works project. Public works includes all work, construction, alteration, enlargement, improvement, repair, and demolition. *See* RCW 39.04.010(4) and WAC 296-127-010. Time spent traveling related to a public works project may be considered hours worked.

Employers must pay employees for all "hours worked." "Hours worked" means all work requested, suffered, permitted, or allowed while on duty on the employer's premises or at a prescribed workplace, and includes travel time, training and meeting time, wait time, on-call time, preparatory and concluding time, and may include meal periods. "Hours worked" includes all time worked regardless of whether it is a full hour or less. To determine whether time is compensable, *see* Administrative Policy ES.C.2, "Hours Worked." If the travel time is compensable, then prevailing wage may be required for this time.

2. Travel Time To, From, and Between Public Works Project Sites – Travel Origin and Destination.

Prevailing wage is required for work upon a public works project. This may extend to work not performed on the public works project including travel time in certain circumstances. Where the travel originates can impact whether or not the worker must be paid the prevailing wage rate for the travel time.

For example, travel time between two public works projects requires payment of the prevailing wage rate. Below are different types of travel time scenarios related to public works projects. Specific examples are provided in later sections.

2.1 Time Spent Traveling Between Public Works Projects. Travel time between two public works projects, requires payment of the prevailing wage rate. This applies to the driver as well as passengers.

2.2 Time Spent Traveling Between the Worker's Residence and the Employer's Place of Business. To determine whether time spent traveling between the worker's residence and the employer's place of business is compensable, *see* Administrative Policy ES.C.2, "Hours Worked."

If the travel time between the worker's residence and the employer's place of business is not compensable, then prevailing wage is not required for this time. This is true when traveling between a worker's residence and the employer's place of business, but may be different when traveling between their residence and the public works project. For additional guidance *see* Section 2.7 Time Spent Traveling Between a Worker's Residence and the Public Works Project.

2.3 Time Spent Driving, and not as a Passenger, Between the Employer's Place of Business and the Public Works Project. Time spent driving between the employer's place of business and the public works project is generally considered hours worked. To determine whether this time is compensable, *see* Administrative Policy ES.C.2, "Hours Worked."

If the travel time between the employer's place of business and the public works project is not compensable, then payment of prevailing wage is not required for this time. However, if the travel time between the employer's place of business and the public works project is compensable, then prevailing wage may be required for this time.

Prevailing wage is required for the time spent driving to the public works project if, in preparation for the job, the worker must load materials and/or equipment, into the vehicle in order to perform work related to the public works project. Prevailing wage is required if the worker must deliver and/or return materials and/or equipment to the employer's place of business. Prevailing wage must also be paid for the time spent loading and unloading the materials and/or equipment.

Prevailing wage is required for the time spent driving a vehicle or power equipment to the public works project if the vehicle or power equipment is necessary to perform operations upon the public works project.

For example, a worker must be paid the prevailing wage rate for driving a vactor truck, boom truck, street sweeper, or fuel truck between the employer's place of business and the public works project. *See* Section 5.0 for Incorporation, Stockpiles, Concrete, and

More Under WAC 296-127-018. *See* WAC 296-127-01354 for examples of power equipment.

> ***EXAMPLE 2.3-1:*** Along with the travel time from the employer's place of business to the public works project, if a vactor truck has vacuumed up slurry from a public works project, the travel time requires payment of the prevailing wage rate for the return trip to the employer's place of business, as well as the travel time related to discharging the slurry from the vactor truck.

Prevailing wage is required for the travel between the public works project and the employer's place of business if the worker is required to unload materials and/or equipment at the employer's place of business. Hauling debris or discarded materials from the public works project to the employer's place of business or elsewhere remains part of the public work. So the travel between the public works project and the employer's place of business would also require payment of the prevailing wage rate.

Additionally, once the worker is at the employer's place of business, if the worker must perform any additional work such as clean up or disposal connected with the public works project, that work also requires payment of the prevailing wage rate. For example, removing debris from the truck after returning to the shop requires payment of the prevailing wage rate.

> ***EXAMPLE 2.3-2****:* A worker drives an "empty" pickup truck for the first trip of the day to the public works project, and/or drives from a public works project at the end of the workday to return to the employer's place of business. The worker is not transporting any debris, supplies, and/or equipment to or from the project. While the worker's time is compensable, prevailing wage is not required for the travel time if there is no other work activity associated with the public works project.

2.4 Time Spent Traveling as a Driver or Passenger Between the Employer's Place of Business and the Public Works Project. L&I generally does not consider time spent riding as a passenger between the employer's place of business and the public works project as hours worked when a worker voluntarily reports to the employer's location merely to obtain a ride as a passenger for the worker's convenience.

To determine whether this time is compensable, *see* Administrative Policy ES.C.2, "Hours Worked." If the travel time between the employer's place of business and the public works project is not compensable, then prevailing wage is not required for this time.

If a worker travels between a public works project and the employer's place of business to load or unload materials and/or equipment for the public works project during the course of the day, the worker must be paid the prevailing wage rate for this time. This applies to the driver and any passengers who perform this work.

2.5 Time Spent Traveling to the Public Works Project in an Employer-Provided Vehicle Such as a Bus or Van. Prevailing wage is not required for time spent riding as a passenger to a public works project when a worker voluntarily rides on an employer-provided bus merely to obtain a ride as a passenger for the worker's convenience.

L&I generally considers time spent driving a vehicle between the employer's place of business and the public works project as hours worked. The driver of this vehicle is not required to be paid prevailing wage for this travel time unless the public works contract requires transportation and/or the driver performs some additional work such as loading materials and/or equipment onto the vehicle for the public works project.

2.6 Time Spent Traveling Between the Private Work and a Public Works Project. Travel from a public works project to private work does not require prevailing wage. L&I uses the following criteria to determine if prevailing wage is required for travel from private work to the public works project.

- Transporting necessary materials: Prevailing wage is required for the time spent traveling from private work to the public works project if the worker transports materials and/or equipment necessary to perform operations upon the public works project.
- Necessary vehicles or power equipment: Prevailing wage is required for the time spent driving a vehicle or power equipment from a private work to the public works project if the vehicle or power equipment is necessary to perform operations upon the public works project.
- Loading necessary materials/equipment: Prevailing wage is required for the time spent loading materials and/or equipment and traveling from an off-site location to deliver to a public works project, even if the drive started at a private work.

2.7 Time Spent Traveling Between a Worker's Residence and the Public Works Project. L&I does not generally consider time spent traveling between a worker's residence and the public works project as part of a regular commute as hours worked. To determine if this time is compensable, *see* Administrative Policy ES.C.2, "Hours Worked."

If the travel time between a worker's residence and the public works project is not compensable, then prevailing wage is not required for this travel time. However, if this travel time is compensable, then the prevailing wage rate may be required for this travel time.

Prevailing wage is required for the time spent driving to the public works project from a worker's residence if the worker must load materials and/or equipment into the vehicle in order to perform work related to the public works project, including the time spent loading. Prevailing wage is also required if the worker must return materials and/or equipment to their residence, including the time spent unloading.

Prevailing wage is required for the time spent driving the vehicle or power equipment from a worker's residence to the public works project if the vehicle or power equipment is necessary to perform operations upon the public works project.

Hauling debris or discarded materials from the public works project to the worker's residence or elsewhere remains part of the public work. The travel between the public works project and this location requires payment of the prevailing wage rate.

2.8 Time Spent Traveling Between the Staging Yard and the Public Works Project. The work at the staging yard (a location away from the public works project used by the contractors for purposes such as storing materials and/or equipment), as well as travel

between the staging yard and the public works project, require payment of the prevailing wage rate. The staging yard is considered an extension of the public works project.

2.9 Time Spent Traveling Between the Public Works Project and a Supply Source. The time spent traveling between a public works project and a supply source (such as a store, distribution center, retailer, or warehouse) to pick up or return materials and/or equipment requires payment of the prevailing wage rate. *See* Section 4 Travel Time for Workers of Fabricators and Manufacturers for Transporting Nonstandard Items Specfically Produced for the Public Works Project.

2.10 Time Spent Traveling Between an Employer's Fabrication Shop and a Supply Source. When manufacturing or fabricating nonstandard items produced specifically for a public works project, the time spent traveling between an employer's fabrication shop and a supply source to pick up or return materials and/or equipment requires payment of the prevailing wage rate. *See* Addendum A "OFF-SITE FABRICATION OR MANUFACTURE: APPLICATION OF CHAPTER 39.12 RCW" to help determine what is a nonstandard item.

2.11 Time Spent Hauling Materials To and From the Public Works Project. Time spent hauling materials, debris, or discarded materials to and from the public works project requires payment of the prevailing wage rate. The return trip to the public works project also requires payment of the prevailing wage rate even if the vehicle is now empty.

Hauling materials, debris, or discarded materials from the public works project to the employer's place of business or elsewhere remains part of the public work and the travel between the public works project and the employer's place of business requires payment of the prevailing wage rate.

3. Travel Time Includes Wait Time.

Travel time includes time spent waiting to load, loading, transporting, waiting to unload, and delivering materials. If the travel time requires payment of prevailing wage, then the wait time also requires payment of prevailing wage.

4. Travel Time for Workers of Fabricators and Manufacturers for Transporting Nonstandard Items Specifically Produced for the Public Works Project.

Fabricator and manufacturer workers and subcontractors' workers must be paid the prevailing wage rate for travel time to transport and deliver nonstandard items to the public works project, the hiring contractor's place of business, or other location. *See* WAC 296-127-010(7)(a)(vi); WAC 296-127-020(3). Below are example scenarios related to these workers' travel times.

The examples below are applicable if the worker of the fabricator/manufacturer or the worker of a hired third party delivers the nonstandard item.

EXAMPLE 4-1: A countertop fabricator cuts a marble slab in-shop to specifications for a public works project. Because this item was fabricated to the project's specifications, this countertop is a nonstandard item and the worker's fabrication work requires payment of the prevailing wage rate. The delivery by the worker of the custom-made marble countertop also requires payment of the prevailing wage rate.

EXAMPLE 4-2: A manufacturer of custom-made cabinets gets them painted by a different business. The travel time transporting the custom-made cabinets between the cabinet manufacturer and the painting company requires payment of prevailing wage, and the work to manufacture and paint the custom-made cabinets also requires payment of the prevailing wage rate.

EXAMPLE 4-3: A sheet metal shop fabricates ductwork in-shop to specifications for a public works project. Because the ductwork was fabricated to the project's specifications, it is a nonstandard item and worker must be paid the prevailing wage rate for the fabrication work. The delivery of the ductwork by a worker also requires payment of the prevailing wage rate.

4.1 Return Trip Following the Delivery of a Nonstandard Item to the Public Works Project May Require Prevailing Wages. The return trip after delivering a nonstandard item by a fabricator or manufacturer worker requires payment of the prevailing wage rate when the driver performs additional work related to the public works project. Prevailing wage is not required for the return trip when the driver performs no additional work related to the public works project.

EXAMPLE 4.1-1: A countertop fabricator worker delivers a custom-made marble countertop to the public works project and performs no other activity related to the project. The driver then returns to the shop without transporting items back from the project. The trip to deliver the item requires payment of the prevailing wage rate, but the return trip to the shop does not require payment of prevailing wage.

EXAMPLE 4.1-2: A countertop fabricator worker delivers a custom-made marble countertop to the public works project. At the public works project, a worker removes the old countertop as part of a remodel. Another worker loads the old countertop onto the truck and the driver takes it back to the fabricator's shop. The trip to deliver the item requires payment of the prevailing wage rate and the return trip to the shop also requires payment of the prevailing wage rate.

5. Incorporation, Stockpiles, Concrete, and More Under WAC 296-127-018.

WAC 296-127-018 concerns prevailing wage coverage and exemptions of workers involved in the production and delivery of gravel, concrete, asphalt, or similar materials. The materials covered under this section include but are not limited to: sand, gravel, crushed rock, concrete, asphalt, or other similar materials. *See* WAC 296-127-018(1).

Prevailing wage is required for time spent waiting to load, transport, unload, deliver, discharge, or remove these materials. Prevailing wage is required for travel time that includes time spent loading, unloading, delivering, discharging, removing, or producing these materials.

5.1 Prevailing wage is Not Required for the Travel Time to Deliver Materials Described above to a "Stockpile" if the Delivery Meets the Requirements of WAC 296-127-018(4)(a)(b). Prevailing wage is not required when a worker delivers materials to a stockpile. A "stockpile" is defined as materials delivered to a pile located away from the site of incorporation such that the stockpiled materials must be physically moved from the stockpile and transported to another location on the project site in order to be incorporated into the project. Prevailing wage is required when not delivered to a true "stockpile."

A stockpile does not include materials delivered or distributed to multiple locations upon the project site; nor does a stockpile include materials dumped at the place of incorporation, or adjacent to the location and coordinated with the incorporation. Prevailing wage is required for this work.

EXAMPLE 5.1-1: Workers deliver several loads of gravel to a public works project and dump all the materials to one set location away from the road under construction. Prevailing wage is not required for this time absent some additional work

EXAMPLE 5.1-2: Workers deliver several loads of gravel to a public works project and dump the materials at several locations on the project site. Prevailing wage is required for this time.

5.2 Time Spent Traveling Between the Public Works Project and a Supply Source. Prevailing wage is required for the time spent traveling between the public works project and a supply source to transport sand, gravel, crushed rock, concrete, asphalt, or other similar materials when the delivery is not to a stockpile.

EXAMPLE 5.2: A worker travels from the public works project to a supply source to obtain another load of dirt or beauty bark for use on a public works project. The worker delivers the materials to the public works project but not to a stockpile. The round-trip travel between the public works project and the supply source requires payment of the prevailing wage rate.

5.3 Prevailing Wage is Required for the Travel Time Delivering Concrete to a Public Works Project Regardless of the Method of Incorporation. Prevailing wage is required for travel to and from the public works project and all clean-up work related to the delivery and discharge of concrete to the public works project. However, prevailing wage is not required for travel time when traveling from the public works project to private work.

EXAMPLE 5.3-1: Prevailing wage is required for the travel time to the employer's place of business from a public works project, as well as the time spent cleaning the inside of the drum and chute of the ready mix truck.

Example 5.3-2: Prevailing wage is not required for the travel time to the employer's place of business from a private project. Prevailing wage is not required for the time spent cleaning the inside of the drum and chute of the ready mix truck after the driver returns to the employer's place of business.

Example 5.3-3: Prevailing wage is not required for the travel time from a public works project to private work, even if the driver travels to a batch plant first to pick up a load of ready mix for a private project.

6. Travel by the Contractor or Subcontractor Related to the Mobilization and Demobilization of the Prevailing Wage Project.

Mobilization refers to the stages of a construction project where preparations occur onsite or offsite prior to the commencement of any work. Demobilization refers to work during stages of a construction project onsite or offsite after the completion of any work including the disassembly,

removal, and site cleanup of buildings and other facilities assembled for this public works project. This includes travel performed by the contractor or subcontractor related to:

- Transporting a job shack or trailer used for the public works project
- Transporting scaffolding used for the public works project
- Transporting water treatment equipment used for the public works project
- Transporting power equipment, for example bulldozers, used for the public works project

Prevailing wage is not required for the delivery of these items when delivered by a supplier, rental company, or other entity that does not perform work on the public works project.

EXAMPLE 6-1: The worker of a local roofing material supplier drives a load of asphalt shingles to a public works project. After arriving at the public works project, the material supplier worker uses a conveyor to distribute the bundles of shingles to the roof. The worker must be paid the prevailing wage rate for the travel time and for the onsite work to distribute shingles to the roof.

EXAMPLE 6-2: The worker of a crane rental company drives a truck and trailer to a public works project. After arriving at the public works project staging area, the rental company worker performs work to assemble the crane. The worker must be paid the prevailing wage rate for the travel time and for the onsite work to assemble the crane.

Travel time transporting portable toilets to or from a public works project does not require payment of prevailing wage.

EXAMPLE 6-3: The worker of a fuel company drives a tanker to a public works project. After arrival at the public works project staging area, the fuel company worker fills the power equipment throughout the site. The worker must be paid the prevailing wage rate for the travel time and for the onsite work.

7. Transporting Garbage and Recycling Dumpsters.

Prevailing wage may be required for workers who deliver and/or pick up garbage and recycling dumpsters.

EXAMPLE 7-1: A worker delivers and/or picks up dumpsters in routine, scheduled municipal garbage service. Prevailing wage is not required for the worker's travel time for this work.

EXAMPLE 7-2: A contractor's worker delivers and/or picks up dumpsters for construction trash, demolition debris, construction debris, and waste. Prevailing wage is required for the worker's travel time for this work.

8. Which prevailing wage rate applies?

To determine the correct prevailing wage rate, you must consider factors such as:

- The applicable scope of work (trade) and job classification for the travel time related to a public works project;
- Type and purpose of vehicle;

- The location (county) of the public works project;
- Effective date of the contract; and
- Other relevant factors.

For instance, the work may fall within the truck driver scope of work, or it may fall within a different scope of work such as power equipment operators or street sweepers.

For any questions, please contact L&I at PW1@LNI.WA.GOV.

Addendum A

OFF-SITE FABRICATION OR MANUFACTURE: APPLICATION OF CHAPTER 39.12 RCW

Washington State Department of Labor and Industries Policy Statement (Regarding the Production of "Standard" or "Non-standard" Items)

Below is the department's (State L&I's) list of criteria to be used in determining whether a prefabricated item is "standard" or "non-standard". For items not appearing on WSDOT's predetermined list, these criteria shall be used by the Contractor (and the Contractor's subcontractors, agents to subcontractors, suppliers, manufacturers, and fabricators) to determine coverage under RCW 39.12. The production, in the State of Washington, of non-standard items is covered by RCW 39.12, and the production of standard items is not. The production of any item outside the State of Washington is not covered by RCW 39.12.

1. Is the item fabricated for a public works project? If not, it is not subject to RCW 39.12. If it is, go to question 2.

2. Is the item fabricated on the public works jobsite? If it is, the work is covered under RCW 39.12. If not, go to question 3.

3. Is the item fabricated in an assembly/fabrication plant set up for, and dedicated primarily to, the public works project? If it is, the work is covered by RCW 39.12. If not, go to question 4.

4. Does the item require any assembly, cutting, modification or other fabrication by the supplier? If not, the work is not covered by RCW 39.12. If yes, go to question 5.

5. Is the prefabricated item intended for the public works project typically an inventory item which could reasonably be sold on the general market? If not, the work is covered by RCW 39.12. If yes, go to question 6.

6. Does the specific prefabricated item, generally defined as standard, have any unusual characteristics such as shape, type of material, strength requirements, finish, etc? If yes, the work is covered under RCW 39.12.

Any firm with questions regarding the policy, WSDOT's Predetermined List, or for determinations of covered and non-covered workers shall be directed to State L&I at (360) 902-5335.

This checklist was published in the Washington State Register 99-13

PREVAILING WAGE POLICY MEMORANDUM

DATE: **August 11, 2013**

TO: **All Interested Parties**

FROM: **L. Ann Selover, Industrial Statistician, Prevailing Wage Program Manager**

SUBJECT: **Filing an Affidavit Form "On Behalf Of" a Subcontractor**

Policy Disclaimer

This policy is designed to provide general information in regard to the current opinions of the Department of Labor & Industries on the subject matter covered. This policy is intended as a guide in the interpretation and application of the relevant statutes, regulations, and policies, and may not be applicable to all situations. This policy does not replace applicable RCW or WAC standards. If additional clarification is required, the Program Manager for Prevailing Wage should be consulted.

This document is effective as of the date of print and supersedes all previous interpretations and guidelines. Changes may occur after the date of print due to subsequent legislation, administrative rule, or judicial proceedings. The user is encouraged to notify the Program Manager to provide or receive updated information. This document will remain in effect until rescinded, modified, or withdrawn by the Director or his or her designee.

Prior to receiving payment on a public works contract, a contractor and all of its subcontractors must comply with the requirements of chapter 39.12 RCW. These requirements include the filing of a Statement of Intent to Pay Prevailing Wages ("Intent"), and the filing of an Affidavit of Wages Paid ("Affidavit"). Prior to receiving payment from the contract awarding agency, RCW 39.12.040 requires contractors to affirm to the contract awarding agency that prevailing wages have been paid in accordance with pre-filed statements of intent to pay prevailing wages on file with the public agency. This provision makes contractors accountable for the compliance of subcontractors, and contractors should require each subcontractor to file its Intent before initiating work on a public works project.

In addition to the Intent form, filing of the Affidavit by each and every contractor and subcontractor is essential for ensuring obtaining the release of retainage held on the contract. However, there are occasions when a subcontractor may fail to file an Affidavit for reasons outside the control of the hiring contractor.

Pursuant to RCW 39.12.040(1)(b), a contractor may file an Affidavit on behalf of a nonresponsive subcontractor that has ceased operations or failed to file as required under prevailing wage law. The process requires that the contractor must accept liability for wages owed by the subcontractor, and that there must be a contractual relationship between the subcontractor who has not filed and the contractor or subcontractor who wants to file on behalf of the nonresponsive contractor. Also, please note that an Affidavit cannot be filed unless a corresponding Statement of Intent to Pay Prevailing Wages (Intent) form was filed by the subcontractor.

Documentation that Must Be Filed with a Request to File on Behalf of a Subcontractor

If your company meets the above conditions, and wants to file on behalf of a subcontractor, the following documentation must be provided in order for L&I to permit the filing:

- A copy of the contract between you and the subcontractor, or other documentation of the contractual relationship identified in RCW 39.12.010(1)(b).
- A copy of a letter sent Certified Mail by your company to the subcontractor giving them 10 business days to file the required form(s), **and**
    - A copy of the Certified Mail Receipt and returned letter and envelope that has been refused or unclaimed, **or**
    - A copy of the signed green Certified Mail Return Receipt.

If you are seeking to file on behalf of a subcontractor for the reason that the subcontractor has ceased operations, you must document that fact. The following is a list of examples of items that L&I may accept as proof that a subcontractor has ceased operations:

- Contractor Registration showing expired/suspended status
- A report from the Secretary of State, Department of Revenue, or other agency web site showing the company is no longer in business
- A letter from the closed firm, stating the firm is no longer in business
- A newspaper article stating the closed business entity's status
- The case number and date of the bankruptcy filing
- A letter from bankrupt firm stating bankruptcy has been filed and the date of filing
- A newspaper article regarding the business entity's bankruptcy status

Filing Process

In addition to the referenced documentation, complete and submit to L&I a hard copy (paper) Affidavit form using the subcontractor's information. You cannot use the PWIA (online) system for this process. Please fill out the paper form as if it were being completed by the subcontractor on whose behalf you are acting, with the following exceptions:

a. Insert your own company information in the "Company Name" section located at the top left of the form. **Do not indicate the subcontractor's business entity name in this section.**

b. In the Craft/Trade/Occupation section located in the middle of the form, write the following statement: [FILL IN YOUR COMPANY NAME] is filing on behalf of [FILL IN SUBCONTRACTOR NAME] due to [INSERT "FAILED TO FILE" OR "CEASED OPERATIONS"]. **You must provide the subcontractor's business address, phone number, contractor registration number (if applicable), and UBI number in this section**.

   Be sure to list the "Craft/Trade/Occupation," "Rate of Hourly Pay" and "Rate of Hourly Fringe Benefits" (if provided). Supply as much information as you have available from payroll records, daily log sheets, etc. Use Addendum A if you run out of space. If an Owner/Operator performed work, include their name. Incomplete forms will not be approved.

c. At the Signature Block, add a note**:** "See attached Assumption of Liability Statement in lieu of this certification" and attach the referenced statement. See item "e" below and the attached "Assumption of Liability Statement."

You must submit the Assumption of Liability statement on your company letterhead using the exact language prescribed by the department. The statement provides that the company filing on behalf of a contractor/subcontractor assumes full liability for any worker wage claims, consistent with the provisions of RCW 39.12.040(1)(b).

Mail completed forms and all documentation along with payment of the Affidavit filing fee ($40 per form) to:

Management Services
Department of Labor & Industries
P.O. Box 44835
Olympia, WA 98504-4835

Notice Regarding Penalties

L&I may issue a Notice of Violation (NOV) against the subcontractor on whose behalf you are requesting to file, and assess a penalty against them, under RCW 39.12.050, in the amount of $500.00 for its failure to file. A violator with unpaid penalties due after a final order will not be permitted to bid on public works or have any public works bid considered. A violator who files a false statement or fails to file a statement or record required to be filed for a second time within a five-year period may be barred from bidding on public works projects for one year.

Intentionally filing a false affidavit on behalf of a subcontractor subjects the filer to the same penalties referenced above as provided in RCW 39.12.050.

Please direct any questions regarding this policy to the Prevailing Wage Office at (360) 902-5335 or by e-mail at PW1@Lni.wa.gov.

Company Letter Head

ASSUMPTION OF LIABILITY STATEMENT

I,_____(company name), declare under penalty of perjury, under the laws of the State of Washington, that the following is true and correct:

I,_____(Company Name) am filing an Affidavit of Wages Paid on behalf of _____(contractor/subcontractor). I,_____(company name), accept full liability for any unpaid wages and interest owed by contractor/subcontractor on whose behalf you are filing) to workers on this project for three years from the date of performance of the work.

Signed this (date) day of (month), (year), at (county),

(company name)

By _____
(SIGNATURE OF AUTHORIZED REPRESENTATIVE)

ADDENDUM TO THE FILING ON BEHALF OF POLICY

DATE: **March 11, 2016**

TO: **All Interested Parties**

FROM: **Jim Christensen**
Industrial Statistician, Prevailing Wage Program Manager

SUBJECT: **Additional Filing On Behalf Of (FOBO) Process Details;**
Surety Filing On Behalf Of (FOBO) the Prime Contractor

The preceding FOBO policy addresses filing an Affidavit of Wages Paid form on behalf of a subcontractor. The policy's disclaimer applies to both that policy and this addendum.

This addendum clarifies and documents additional aspects of the filing on behalf of process. L&I will also process filing an Affidavit on behalf of a prime contractor.

A Statement of Intent to Pay Prevailing Wages is Required on Public Works

RCW 39.12.040 requires an approved Statement of Intent to Pay Prevailing Wages (Intent) from each contractor and subcontractor on a public work before the public contract awarding agency can begin to make payment(s) for their work. RCW 39.12.040 requires filing the Intent(s) on public works contracts.

L&I will handle a filing on behalf of for missing Intents using the same filing on behalf of process used for an Affidavit of Wages Paid.

An Affidavit of Wages Paid is Required on Public Works

RCW 39.12.040 requires an approved Affidavit of Wages Paid (Affidavit) from each contractor and subcontractor on a public work before the public contract awarding agency can release the retainage held under RCW 60.28.011. On a public works project where no retainage is withheld pursuant to RCW 60.28.011(1)(b), all the Affidavit(s) are required prior to final acceptance of the public works project. RCW 39.12.040 requires filing the Affidavits(s) on public works contracts.

The Contract Bond Guarantees Performance of the Contract Duties

RCW 39.08.010 requires a contract bond on public works that guarantees performance of the contracted duties and work as well as payment of workers and material suppliers. If the contractor fails to perform, the public agency can require the surety issuing the bond to fulfill those duties. RCW 39.12.040 requires filing the Intent(s) and Affidavit(s) on public works contracts.

A Prime Contractor Failure to File their Affidavit

L&I will process filing an Affidavit on behalf of the prime contractor in a similar way to the subcontractor process in the preceding policy.

L&I will process filing on behalf of requests made by the public entity. The party doing the filing on behalf of is required by the policy to include the assumption of liability for any unpaid worker wages. The public contract awarding agency will want to ask the surety that issued the contract bond under chapter 39.08 RCW to perform this duty (instead of the public entity doing so). In that way, the surety will be required to sign the assumption of liability required by the policy and the public entity is protected from that potential liability.

A Hiring Contractor Non-Responsive to a Request to File on Behalf of Their Subcontractor

In the event a hiring contractor is not responsive to a request to file a missing Affidavit on behalf of their subcontractor, that request can move up the chain of contracting as required. A higher tier contractor or the prime contractor may do the filing on behalf of consistent with this policy and addendum. In the event the prime contractor is unavailable or unwilling to do the filing on behalf of, the public entity can ask the surety to complete any of the needed filings consistent with this policy and addendum.

Required documentation

A print out from the USPS web site showing delivery of the letter will be accepted in place of the green Certified Mail Return Receipt card.

Example Affidavit

Included is a completed example Affidavit.

The "Your Company Information" block is completed with the requestor's company information. The remainder of the form (highlighted in orange) is completed using the FOBO contractor's information.

In the Craft/Trade/Occupation section located in the middle of the form, write the following statement: [FILL IN YOUR COMPANY NAME] is filing on behalf of [FILL IN CONTRACTOR OR SUBCONTRACTOR NAME] due to [INSERT "FAILED TO FILE" OR "CEASED OPERATIONS"]. You must provide the **subcontractor's business address, phone number, contractor registration number (if applicable), and UBI number** in this section.

Be sure to list the "Craft/Trade/Occupation," "Rate of Hourly Pay" and "Rate of Hourly Fringe Benefits" (if provided). Supply as much information as you have available from payroll records, daily log sheets, etc. Use Addendum A if you run out of space. If an Owner/Operator performed work, include their name.

Questions or Help

Please direct any questions regarding this policy and addendum to the Prevailing Wage Office at (360) 902-5335 or by e-mail at PW1@Lni.wa.gov.

Department of Labor and Industries
Prevailing Wage Program
(360) 902-5335
www.lni.wa.gov/TradesLicensing/PrevWage

AFFIDAVIT OF WAGES PAID

Public Works Contract
$40.00 Filing Fee Required

Affidavit ID # (Assigned by L&I):

Sample FOBO Form

This form must be typed or printed in ink.
- FILL in ALL blanks or the form will be returned for correction (see instructions).
- Please allow a minimum of 7 business days for processing.
- Once approved, your form will be posted online at:
https://fortress.wa.gov/lni/pwlapps/SearchFor.asp

Your Company Information (FOBO Requester Info in this box)

Your Company Name
Twilight Construction + Requester Info

Your Company Address
PO Box 297

City: Chelan | State: WA | Zip+4: 98815

Your Contractor Registration Number: TWILIGHT9271 | Your UBI Number: 602553565

Your Industrial Insurance Account Number
991,355-00

Your Email Address (needed for faster form approval) | Your Phone Number
twilight@yahoo.com | 509-482-4552

Awarding Agency Information

Project Name: Grant Medical Center | Contract Number: 10-026

Awarding Agency
Grant County Hospital District

Awarding Agency Address
PO Box 2

City: Ephrata | State: WA | Zip+4: 98823

Awarding Agency Contact Name: Gail Larry | Phone Number: 509-764-2644

County Where Work Was Performed: Grant | City Where Work Was Performed: Moses Lake

Additional Details

Your Job Start Date (mm/dd/yyyy): 1/1/12 (S.b's) | Your Date Work Completed (mm/dd/yyyy): 1/1/12 (S.b's)

Job Site Address/Directions: 1421 Maple Drive | Your Approved Intent ID #: 173456(Sub's)

RHB 2685 (RCW 39.04.370) – Is this a Prime Contract(or) contract at a cost of over one million dollars ($1,000,000)? ☐ Yes ☒ No

Contract Details

Bid Due Date (Prime Contractor's): 12/7/11 | Award Date (Prime Contractor's): 12/7/11

Indicate Total Dollar Amount of Your Contract (including subcontracts): $60,000(Sub's)

If you answered "Yes" to the RHB 2685 question and the Award Date is 9/1/2010 or later you are not complete and must attach the RHB 2685 (RCW 39.04.370) Addendum.

ARRA Funds

Is the project the American Recovery and Reinvestment Act (ARRA) funded? ☐ Yes ☒ No

Work Performed on County Official Funds

Was the project funded by any warrants or county officers compensated (ARRA or otherwise)? ☐ Yes ☒ No

Prime Contractor Company Information

Prime Contractor's Company Name: Twilight Construction

Prime Contractor's Registration Number: TWILIGHT9271 | Prime Contractor's UBI Number: 602553565

Hiring Contractor Company Information

Hiring Contractor's Company Name: Twilight Construction (who hired the sub)

Hiring Contractor's Registration Number: TWILIGHT9271 | Hiring Contractor's UBI Number: 602553565

Employment Information (Answered for Sub)

Did you use ANY subcontractors?	☐ Yes (Addendum B Required)	☒ No	Did employee perform work on this project?	☒ Yes	☐ No
Was ALL work subcontracted?	☐ Yes (Addendum B Required)	☒ No	Did you use apprentice employees?	☐ Yes	☒ No

Number of Owners/Operators who own or have title to the property who performed work on this project: ☒ None (0) ☐ One (1) ☐ Two (2) ☐ Three (3)

Trade/Occupation and Apprentices – For Apprentices enter their name, registration number, trade class worked on project, the number of hours in the pay period in which they performed work and ended work on the project, wages and fringe for each apprentice. For additional trade/occupations please use Addendum A	Number of Workers	Total # of Hours Worked	Rate of Hourly Pay	Rate of Hourly Fringe (Fringe*) Benefits
Twilight is filing on behalf of Sunrise Electric because they have gone out of business				
Sunrise Electric UBI #6045937 Cont. Reg. SUNRI*121B				
123 Sunglow Dr Olympia, WA 98501 (360) 867-5309				
Electrician (Journeyman)	1	250	50.00	2.00

Signature Block

I hereby certify that I have read and understand the instructions on completing this form and that the information on this form and any attachments is correct and that all workers employed on this project received wages at no less than the Prevailing Wage Rates for the trade(s) as listed by Industrial Statistician of the Department of Labor and Industries.

Print Name: | Print Title: | Signature: Not an acceptable form of electronic signature for this certification | Date:

For L&I Use Only

FOBO: Department of Labor and Industries

By: Industrial Statistician

Requester Info
FOBO Contractor Info

F700-107-000 Affidavit of Wages Paid 3-2011

2016 Officers
President
Kirk S. Holmes
Director
Perteet, Inc.

Vice President
Debbie Sullivan
Deputy Director of Public Works
City of Olympia

Secretary
Scott Egger, PE
Director of Public Works
City of Lacey

Treasurer
Lorelei Williams, PE
Capital Projects Manager
Seattle DOT

Past President
Michael D. Clark, PE
Vice President
David Evans and Associates

Board of Directors
Term 2015-16
Heath Henderson, PE
Public Works Director
Clark County

Donald J. Huling PE
Vice President
Principal Geotechnical Engineer
HWA GeoSciences Inc.

Ahmad Qayoumi, PE
Public Works Director
City of Pasco

Hillary Stibbard, PE
Principal Office Engineer,
Transportation
City of Bellevue.

Chapter Liaison
John Carpita, PE
Public Works Consultant
MRSC

Chapter Delegate
Kristina B. Nelson PE
Senior Program Manager-
Engineering
Kitsap County

Board of Directors
Term 2016-17
Don Bitterman
Fleet/Facilities Supervisor
City of Wenatchee

Jim Rioux
Project Manager
City of Olympia

Ramiro Chavez, PE, PgMP
Public Works Director
Thurston County

Cathy McKay
Marketing Director
SCJ Alliance

February 8, 2016

Jim P. Christensen
Industrial Statistician and Prevailing Wage Program Manager
Washington State Department of Labor and Industries
P.O. Box 44835
Olympia, WA 98504-4835

Re: Request for Changes to the Filing on Behalf Policy Paper to Include FOBO by a Surety for a Prime Contractor

Dear Mr. Christiansen:

Thank you for meeting via conference call with Mike Shaw and Scott Sawyer to discuss our concerns about implementation of HB 1420 (2013), specifically concerns about a local agencies ability to close a project in the event a prime contractor refused to submit affidavits of wages paid. Per this discussion, we understand it is Labor and Industries position a surety is responsible for filing on behalf of (FOBO) the prime contractor is such circumstances. The surety would take liability for payment of wages as part of the FOBO process.

The FOBO is explained in the August 11, 2013 paper, PREVAILING WAGE POLICY MEMORANDUM. However, this paper does not explicitly state a local agency can compel a surety to file on behalf of a non-responsive prime contractor. It is our understanding Labor & Industries is willing to issue an addendum to the policy paper to address a surety filing.

The purpose of this letter is to formally request an addendum to the policy paper.

Respectfully,

Kirk Holmes
2016 APWA Chapter President

c: Jim Rioux – jrioux@ci.olympia.wa.us
Tina Nelson – knelson@co.kitsap.wa.us
Scott Sawyer – scott.sawyer@scjalliance.com

PREVAILING WAGE POLICY MEMORANDUM

DATE: **July 31, 2015**

TO: **All Interested Parties**

FROM: **James P. Christensen, Industrial Statistician, Prevailing Wage Program Manager**

SUBJECT: **Prevailing Wage Survey Methodology**

Policy Disclaimer

This policy is designed to provide general information in regard to the current opinions of the Department of Labor & Industries on the subject matter covered. This policy is intended as a guide in the interpretation and application of the relevant statutes, regulations, and policies, and may not be applicable to all situations. This policy does not replace applicable RCW or WAC standards. If additional clarification is required, the Program Manager for Prevailing Wage should be consulted.

This document is effective as of the date of print and supersedes all previous interpretations and guidelines. Changes may occur after the date of print due to subsequent legislation, administrative rule, or judicial proceedings. The user is encouraged to notify the Program Manager to provide or receive updated information. This document will remain in effect until rescinded, modified, or withdrawn by the Director or his or her designee.

Background

Washington's prevailing wage law was enacted to protect the employees of government contractors from substandard earnings and to preserve local wage standards. See Everett Concrete Products, Inc. v. Department of Labor and Industries, 109 Wn.2d 819, 823 (1988).

In recent decades, Washington's citizens have enjoyed a relatively stable and healthy economy. The workforce, including construction workers, has benefited from relatively high wages and benefits. The prevailing-wage law prohibits government contractors from eroding those wage standards by paying lower wages on public-works projects. In this way, the law also helps to protect local employers from wage competition.

Prevailing-wage surveys are designed to identify the local wage standards to be protected.

Statutory and regulatory provisions

The prevailing-wage survey is one component of administering Washington's prevailing-wage law. The central requirement is found under in RCW 39.12.020:

> *The hourly wages to be paid to laborers, workers or mechanics, upon all public works and under all public building service maintenance contracts of the state or any county, municipality or political subdivision created by its laws, shall be not less than the prevailing rate of wage for an hour's work in the same trade or occupation in the locality within the state where such labor is performed.*

RCW 39.12.010(1) defines prevailing rate of wage as:

> *…the rate of hourly wage, usual benefits and overtime paid in the locality…to the majority of workers, laborers or mechanics in the same trade or occupation. [If] there is not a majority in the same trade or occupation paid at the same rate, then the average rate of hourly wage and overtime paid to such laborers, workers or mechanics in the same trade or occupation shall be the prevailing rate.*

RCW 39.12.010(2) defines the locality to be used:

> *… the largest city in the county wherein the physical work is being performed.*
>
> This provision establishes both that rates vary by county and that the rate is determined by examining data in the largest city and in the county.

Under RCW 39.12.015:

> *All determinations of the prevailing rate of wage shall be made by the industrial statistician of the Department of Labor and Industries.*

For surveys initiated on or after August 1, 2003, RCW 39.12.026 says:

> *In establishing the prevailing rate of wage…all data collected by the department may be used only in the county for which the work was performed.*

RCW 39.12.010(4) defines "interested party" to be:

> *…a contractor, subcontractor, an employee of a contractor or subcontractor, an organization whose members' wages, benefits and conditions of employment are affected by this chapter, and the director of Labor and Industries or the director's designee.*

Given these and other requirements under chapter 39.12 RCW, it is L&I's duty to determine and publish a prevailing wage rate for each established trade and occupation in each county, subject to certain additional statutory instructions. Once published, these rates must be paid by contractors and subcontractors to workers, laborers and mechanics on all public-works projects.

To do this, L&I makes two sets of statistical assessments: 1) whether a majority rate for each trade and occupation is found in the relevant locality (the largest city in each county) and 2) if there is not a majority rate, to assess an average rate.

Based on state law, a survey methodology is implemented in WAC 296-127-019. The code sets out the major aspects of establishing and updating the published prevailing wage rates in nine parts.

Wage Survey Process

The survey proceeds in three primary parts: 1) Data collection, 2) Validation of the data collected, and 3) Analysis of the data.

As noted above, the wage survey serves two distinct statutorily defined tasks: to assess whether there is a rate of wage paid to the majority of workers in each trade in each locality, and, if there is not, to assess the average rate that is paid for each trade in each locality. Both of these tasks look at the same information and differ primarily in the analysis stage.

The survey process is conducted by an economic analyst and one or more data compilers under the supervision of the Industrial Statistician.

Data collection

Census approach

Rather than attempting to take a random sample of each trade or occupation in each locality, which would exclude employers that are not chosen to be in the sample and would limit the volume of data collected, the survey aims to include as many employers as possible and to collect as much relevant data as is possible to assess whether there's a majority and to establish an average wage. L&I attempts to identify and provide a survey form to all businesses in the state that employ workers within the trade or occupation being surveyed. All employers and interested parties (such as labor unions) are invited to participate.

Participation

Although L&I actively seeks employers with relevant data, employers and other interested parties may participate even if they don't receive a survey. Survey forms are posted on our website while surveys are under way, and interested parties may download, complete and forward the forms to the department. Labor unions may submit data on hours worked for signatory contractors. Survey forms also may be filed by interested parties based on the Affidavit of Wages Paid form or Certified Payroll Records. L&I encourages but does not require participation.

L&I sends surveys broadly to all employers with a reasonable chance of having relevant data to report and to labor unions that represent employees who work in the trade being surveyed. On average, about 20-25% of survey recipients respond. The participation rate among large employers appears to be high, close to 100%. Therefore, the proportion of the statistical data universe (all wages and hours in the construction industry) that is received by L&I , while difficult to measure, is considerably higher than the (20-25%) basic response rate.

Mailing lists

With few exceptions, every employer in Washington is required to either participate in the state's workers' compensation program or provide similar coverage through self-insured programs.

Most construction companies in Washington participate in the "state fund" system. They are required to report worker hours on a quarterly basis and to categorize those hours according to risk classifications. These reports provide information about what activities the workers are performing, and L&I uses this information to target surveys to specific employers. This "state fund" information is the primary source of mailing lists for the prevailing-wage survey. Self-insured companies that are not required to report worker hours to L&I, are also included in survey mailing lists. For certain construction trades and occupations, other mailing lists are used such as lists of registered contractors or licensed electrical contractors.

Substantial effort is made to ensure that survey mailing lists include every employer in Washington that employs the category of workers being surveyed. During a survey, if L&I becomes aware of an employer that did not receive a survey form or that the form has been lost, a form will be provided. Also, survey forms are publicly available to download from our website during a survey.

Survey period
Survey forms ask employers to report wages and hours worked over a specific period of time. The period of time is usually six to twelve months. Survey periods usually start and end at the beginning of a quarterly period (e.g., Jan. 1, April 1, July 1 or Oct. 1).

Survey form and instructions
The survey form and instructions used by L&I have been developed over the history of the prevailing-wage survey process to ensure that all necessary information is reported. Failing to follow survey instructions is the most common reason an employer's survey form cannot be used.

Validation

Once data are submitted, they must be entered into a calculation spreadsheet or database, but this is done only when the data meet the requirements of the survey process. L&I reviews whether the survey form is 1) submitted timely, 2) complete, 3) relevant and 4) accurate. With each survey, the department receives a number of forms that weren't filled out properly and cannot be entered without additional information or clarification from the survey respondent.

Timeliness
Beginning from the initial mailing, employers are given a deadline to complete and return survey forms. The period of time is usually two to three months. This information is stated on the survey form. Forms submitted after this deadline may not be used in calculations.

Completeness
Examples of problems with completeness:

- Data left blank. For example, leaving the Trade/Classification section blank.
- Survey is not signed in the signature section at the bottom.
- Survey is unreadable, or a portion is missing.
- A salary is listed in lieu of the requested wage-and-hour data.

Survey forms with problems like these are not entered into the calculation database or spreadsheet initially. If a data compiler is unsure about what data to enter or how to record the data, the economic analyst will review the form. If the economic analyst is unsure how to handle certain data, he or she will consult with the Industrial Statistician.

Relevance
Information on the form may not be within the range of data being surveyed. For example, in a Carpenter survey, a respondent might report hours and wages for "Electrician." Likewise, data may be submitted for a trade or occupation that falls outside the class of workers, laborers and mechanics to which the law applies (e.g., "Project Superintendent"). This data is not used.

Accuracy and verification
Whether submitted by employers or interested parties, respondents must report all available wage-and-hour data. Employers have access to all hours worked by all workers. When submitting wage-and-hour data, the employer must include all work performed on both public and private projects. If L&I identifies hours and wages that should have been included on a survey form but were omitted, the department will not use the data submitted. The department may contact the respondent to gather more information.

WAC 296-127-019(4)(d) allows interested parties to submit survey data on behalf of employers using Certified Payroll Records or Affidavits of Wages Paid. Interested parties must attach copies of these source documents to the completed survey form so L&I may validate the data. Private works data to which interested parties do not have access are not required to be reported on survey forms filed by those interested parties. Labor unions filing on behalf of signatory contractors under WAC 296-127-019(4)(c) are not required to attach these source documents.

Survey data from contractors, labor representatives and interested parties is accepted as accurate unless L&I receives information suggesting there is an inaccuracy in a survey report (e.g., discrepancies between documents received and reported data that are clearly outside the expected data range, such as an apprenticeship contribution of $17/hr.).

Repairing and editing survey forms and data
If a company submits valid and complete survey data and an interested party also submits survey data on behalf of that company, L&I will use the data submitted by the company and not use the data submitted by the interested party. It is generally assumed that an employer has more complete and accurate data with which to complete a survey report than an interested party filing on behalf of that employer. If the two submissions differ sharply, then L&I may inquire about the reasons for the differences.

Where it is feasible to do so, L&I may attempt to repair survey forms that were not properly completed. A decision to repair or complete certain survey submissions is made based on three criteria:

1) What effect might the data have on the calculation? For example, if repairing certain survey forms will provide wage-and-hour data in counties where no other data are

available, then every attempt will be made to repair the survey submissions and retrieve the data.

2) How many survey forms will require action and the complexity of the required actions.
3) The level of staffing resources available for this activity.

Analysis

Prevailing wages are calculated on a county-by-county basis and are based on the hours reported in the largest city, where possible. Typically, a high volume of data are reported for King County (and Seattle). King County data for a single survey can be as high as several million hours. For Washington's smallest counties, data can be scarce. It is not uncommon for L&I to receive no hours for the relevant trades in several of the more rural and sparsely populated Washington counties. L&I never uses data in one county to calculate a prevailing wage in another county. If no data are reported for a county, the existing prevailing wage in that county is not recalculated.

"Foreman" or "lead worker" hours are included in surveys (WAC 296-127-015). Apprentice, "trainee" and "helper" hours and wages are not included in prevailing-wage surveys. Only the wages and hours of fully qualified journey-level workers are used to calculate prevailing wages.

Calculation of whether there is a majority wage in the locality

The prevailing rate of wage is the hourly wage, usual benefits and overtime paid to the majority of workers in a trade or occupation, in the largest city in a county. If the majority of hours reported in the largest city were worked at one wage (including benefits), then that combination of hourly wage and usual benefits become the new prevailing wage. Where the sums of the hourly wage and usual benefits for two contractors are identical, L&I regards the two contractors' rates to be identical for purposes of determining whether a majority of workers is paid the same rate.

Where a set of wage rates is established for occupations within a trade based on the specific tasks and duties being performed, such as the wages specified for sub-classifications within a collective bargaining agreement, the number of hours worked under each occupation will be summed together to determine whether there is a majority of hours paid at the same wage rate for the trade or classification.

Where occupations within a trade are established on the basis of the different tasks and duties performed and the wage is increased during a survey period, the post-increase wage will be attributed to those hours. Usually, this occurs under a collective bargaining agreement.

Calculating an average wage in the locality

If no one rate is paid for more than 50% of the hours worked for the relevant trade in the largest city in a county, then the average of all hours, wages and benefits reported for that city is calculated and becomes the new prevailing wage. This average calculation is a "weighted average" (i.e., each wage and benefit combination is "weighted" by the number of hours reported at that rate).

If there are no hours in the largest city, or if the number of hours in the largest city falls below the proper threshold (WAC 296-127-019(6)(d)), then all the data from the county are used, including data from outside the largest city. In this instance, a weighted-average calculation is used. If the volume of data received for the entire county falls below a threshold determined by L&I's Industrial Statistician, then the prevailing wage is not recalculated.

Updating Wages

Where the wages from a collective bargaining agreement are determined to be the prevailing wages in a locality, the prevailing wages are periodically updated according to the scheduled increases in that CBA. Where the wages paid to a group of workers not covered under a CBA are recognized as "prevailing wages" in a locality, and where those workers' wages are increased according to the tasks and duties performed, the prevailing wage in that locality is updated accordingly.

Where the sum of the hourly wage and usual benefit amounts for a contractor are identical to the existing prevailing wage, and where that prevailing-wage rate was derived from a collective bargaining agreement, L&I regards the hours reported at that rate as "CBA-derived" for the purpose of periodic updates (WAC 296-127-019(1)(b)).

Where an "average" wage calculation becomes the prevailing wage because insufficient hours are reported for the largest city in the county but sufficient hours are reported for the entire county, and where the only wage reported is the CBA rate, then that wage is considered "derived" from a CBA and will be periodically updated to reflect the most current rates in that CBA.

STATE OF WASHINGTON

DEPARTMENT OF LABOR AND INDUSTRIES

Prevailing Wage Policy Memorandum

Date: **April 6, 2015**
To: **All interested parties**
From: **Jim Christensen, Industrial Statistician & Program Manager**
Subject: **Prevailing Wage Requirements for Portable Toilets**

Policy Disclaimer

This policy is designed to provide general information in regard to the current opinions of the Department of Labor & Industries on the subject matter covered. This policy is intended as a guide in the interpretation and application of the relevant statutes, regulations, and policies, and may not be applicable to all situations. This policy does not replace applicable RCW or WAC standards. If additional clarification is required, the Program Manager for Prevailing Wage should be consulted.

This document is effective as of the date of print and supersedes all previous interpretations and guidelines. Changes may occur after the date of print due to subsequent legislation, administrative rule, or judicial proceedings. The user is encouraged to notify the Program Manager to provide or receive updated information. This document will remain in effect until rescinded, modified, or withdrawn by the Director or his or her designee.

Under RCW 39.12.030, state and local government contracts to perform "construction, reconstruction, maintenance or repair" (work upon a public work) must require prevailing wages. For purposes of Washington State prevailing wage regulations, chapter 39.12 RCW and chapter 296-127 WAC, some work is not directly related to the performance of the public works contract and will not have a prevailing wage requirement.

Portable Toilets for Community Events

Portable toilets for community events such as fairs, parades, or special events, have no connection to a public works contract and will not have a prevailing wage requirement under chapter 39.12 RCW.

Portable Toilets for Public Works Projects

Portable toilets serving a public works project are not equipment or materials used to actually perform a public works contract. A contract for rental of portable toilets is not a contract to perform any construction or reconstruction of a public work nor is it a contract to perform maintenance or repair of anything constructed as a public work. Supplying or servicing portable toilets for a public work is not subject to the requirements of chapter 39.12 RCW and will not require prevailing wages.

STATE OF WASHINGTON

DEPARTMENT OF LABOR AND INDUSTRIES

Prevailing Wage Policy Memorandum

Date: **April 6, 2015**
To: **All interested parties**
From: **Jim Christensen, Industrial Statistician & Program Manager**
Subject: **Prevailing Wage Requirements for Lock and Locksmith Work**

Policy Disclaimer

This policy is designed to provide general information in regard to the current opinions of the Department of Labor & Industries on the subject matter covered. This policy is intended as a guide in the interpretation and application of the relevant statutes, regulations, and policies, and may not be applicable to all situations. This policy does not replace applicable RCW or WAC standards. If additional clarification is required, the Program Manager for Prevailing Wage should be consulted.

This document is effective as of the date of print and supersedes all previous interpretations and guidelines. Changes may occur after the date of print due to subsequent legislation, administrative rule, or judicial proceedings. The user is encouraged to notify the Program Manager to provide or receive updated information. This document will remain in effect until rescinded, modified, or withdrawn by the Director or his or her designee.

Under RCW 39.12.030, state and local government contracts to perform "construction, reconstruction, maintenance or repair" (work upon a public work) must require prevailing wages. For purposes of Washington State prevailing wage regulations, chapter 39.12 RCW and chapter 296-127 WAC, some work on locks for state or municipal agencies will be public work requiring prevailing wages and some does not amount to work upon a public work (and therefore would not require prevailing wages).

Original Installation or Replacement Work

Installation or replacement of finish hardware such as locks, lock sets, door knobs, or door closers will require prevailing wages.

Which Prevailing Rate of Pay is Correct?

Installation or replacement of finish hardware such as locks, lock sets, door knobs, or door closers requires the Carpenter prevailing wage rate. The Carpenters (WAC 296-127-01310) rate of pay is correct for work to fit and install prefabricated wooden cabinets, window frames, door frames, doors, weather stripping, interior and exterior trim, and finish hardware, such as locks, letter drops and kick plates.

What Lock Work Will Not Require Prevailing Wages?

Picking a lock, rekeying work on existing locks, or opening a safe will not require prevailing wages under chapter 39.12 RCW. This work is not considered to be construction, alteration, repair, improvement, or maintenance subject to the requirement to pay prevailing wages.

STATE OF WASHINGTON

DEPARTMENT OF LABOR AND INDUSTRIES

Prevailing Wage Policy Memorandum

Date: **April 6, 2015**
To: **All interested parties**
From: **Jim Christensen, Industrial Statistician & Program Manager**
Subject: **Office cubicles and furniture**

Policy Disclaimer

This policy is designed to provide general information in regard to the current opinions of the Department of Labor & Industries on the subject matter covered. This policy is intended as a guide in the interpretation and application of the relevant statutes, regulations, and policies, and may not be applicable to all situations. This policy does not replace applicable RCW or WAC standards. If additional clarification is required, the Program Manager for Prevailing Wage should be consulted.

This document is effective as of the date of print and supersedes all previous interpretations and guidelines. Changes may occur after the date of print due to subsequent legislation, administrative rule, or judicial proceedings. The user is encouraged to notify the Program Manager to provide or receive updated information. This document will remain in effect until rescinded, modified, or withdrawn by the Director or his or her designee.

Work upon a public work requires prevailing wages. For purposes of Washington State prevailing wage regulations, chapter 39.12 RCW and chapter 296-127 WAC, some work on office cubicles for state or municipal agencies does not amount to work upon a public work (and therefore would not require prevailing wages).

This policy addresses prevailing wage requirements for the assembly, installation, disassembly and delivery of cubicles, furniture, modular furniture systems, partitions or a similar product.

The moving, transport, delivery, assembly and placement of furniture (chairs, tables, cabinets, modular work stations, etc.) does not require the payment of prevailing wages with the following three exceptions:

1. Attachment to a building or other structure requires the payment of prevailing wages. Electrical work (including connecting electricity between modular work station panels), plumbing work and attachment of furniture (work station panels, stadium seats, etc.) are examples of attaching furniture to a structure.

2. Disassembly, moving and reassembly necessitated by a public works contract. For example, furniture sometimes must be moved in order to accomplish work such as painting, floor covering, ceiling work, etc. This furniture-handling must be paid at prevailing wage rates.

3. The transport and delivery of nonstandard items to be installed as fixtures including custom-fabricated furniture made and installed to contract specifications must be paid at prevailing wage rates.

PREVAILING WAGE POLICY MEMORANDUM

DATE: **February 28, 2013**

TO: **All Interested Parties**

FROM: **L. Ann Selover, Industrial Statistician, Prevailing Wage Program Manager**

SUBJECT: **How to Calculate the Hourly Rate of Contribution for Usual (Fringe) Benefits as Part of the Prevailing Rate of Wage.**

Policy Disclaimer

This policy is designed to provide general information in regard to the current opinions of the Department of Labor & Industries (L&I) on the subject matter covered. This policy is intended as a guide in the interpretation and application of the relevant statutes, regulations, and policies, and may not be applicable to all situations. This policy does not replace applicable RCW or WAC standards. If additional clarification is required, the Program Manager for Prevailing Wage should be consulted.

This document is effective as of the date of print and supersedes all previous interpretations and guidelines. Changes may occur after the date of print due to subsequent legislation, administrative rule, or judicial proceedings. The user is encouraged to notify the Program Manager to provide or receive updated information. This document will remain in effect until rescinded, modified, or withdrawn by the Director or his or her designee.

PREVAILING WAGE RATE: The prevailing wage required under chapter 39.12 RCW to be paid on public work projects is defined under RCW 39.12.010(1) to include a "rate of hourly wage, **usual benefits,** and overtime." As a result, usual benefits are recognized as part of the total wage rate when publishing the prevailing wage, and when gauging compliance with prevailing wage law. This document is intended to provide guidance to employers in determining which contributions qualify as usual benefits and how to calculate such benefits as part of the prevailing wage rate.

USUAL BENEFITS: Usual benefits are defined in RCW 39.12.010(3) and WAC 296-127-014 and include employer payments for medical insurance, pensions, approved apprenticeship training programs, vacation and holiday pay, and other bona fide benefits. Deductions from workers' paychecks are not usual benefits. Usual benefits are employer paid. Benefits that are required by law (Industrial Insurance, Social Security, State Unemployment Compensation taxes, etc.) do not qualify as usual benefits.

Employers must pay a wage and usual benefit package that adds up to the published prevailing rate of wage for the work performed. Employers are not required to provide usual or fringe benefits, and if they do not, the total prevailing wage rate must be paid as an hourly wage. In any event, employer paid usual benefits cannot be applied to reduce the hourly wage paid to less than the state minimum wage. Please note special overtime and holiday rates may also be established for some trades and occupations.

A. **Insurance (medical, dental, life, etc.):** Insurance premiums include **employer paid portions** of medical, dental, vision and life insurance benefits. Do not include insurance benefits that are employee paid through payroll deduction, workers' compensation premiums, unemployment insurance, or any other federally or state mandated payroll deductions.

B. **Pension or retirement plans:** Pension and retirement contributions include **employer paid portions** of pension and retirement plans which are irrevocably made to a trustee or to a third person pursuant to a fund, plan, or program. Do not include pension or retirement benefits that are employee paid through payroll deductions.

C. **Vacation and/or holiday:** Report **employer paid** vacation and/or holiday benefits. Do not include vacation fund deposits that are employee paid through a payroll deduction.

D. **Apprenticeship programs:** Report **employer paid** contributions made to apprenticeship or training programs recognized by the Washington State Apprenticeship and Training Council.

E. **Other bona fide programs:** Other **employer paid** programs may qualify as "usual benefits." Please consult with L&I prior to including payments to such programs in your reported wage rate.

See RCW 39.12.010, WAC 296-127-014 and WAC 296-127-01410.

POSTING AND DOCUMENTATION: Employers must comply with all posting and employee notification requirements provided by applicable federal and state laws concerning usual benefits plans. Employers must also have and make available to L&I upon request, copies of all documents concerning usual benefits identified in WAC 296-127-014. *See* WAC 296-127-01410. *See also* U.S. Department of Labor (U.S. DOL) Employee Benefits Security Administration *Reporting and Disclosure Guide for Employee Benefit Plans.*

CALCULATING BENEFIT AMOUNTS – APPORTIONING BENEFITS TO HOURS WORKED: Although "usual benefits" are defined under RCW 39.12.010(3), certain plans will require additional information on how benefit payments should be apportioned to hours worked. It has been the long-time position of L&I, consistent with the approach adopted by many other states and by the U.S. DOL with respect to most plans, that contributions made to a fringe benefit plan for public works should be based on the effective annual rate of contributions for all hours, public and private, worked during the year by an employee. In order to apportion benefits to hours worked, L&I will generally look at contributions and hours worked over the course of a year, assuming 2,080 hours per worker per year, unless an employer provides an alternate schedule and can document actual hours worked. This approach is sometimes called "annualization."

As the U.S. DOL manual explains the analogous principle under the Davis-Bacon Act (federal prevailing wage law), "...contributions made to a fringe benefit plan for government work generally may not be used to fund the plan for periods of non-government work." *See* Davis-Bacon and Related Acts and Contract Work Hours and Safety Standards Act Field Operations Handbook – 10/25/2010 at 15f11(b). For a basic example, if an employer places $5,000 a year into a health plan for an employee, and the employee works a full time schedule of 2,080 hours, the credit is $2.40/hr. Thus, the employer cannot say that the plan is *only* for public works, even if contributions are tied to public hours.

Examples Illustrating the Use of Different Annual Hours

Suppose that an employer places $5,000 a year into a health plan for an employee, and the employee works a full time schedule of 2,080 hours on a combination of public and private work. In order to obtain an hourly credit, the total contribution is divided by the total hours worked. Thus, at these rates, the hourly contribution is $2.40/hr.

$5,000 / 2080 = $2.40

Alternatively, the worker may be a part time employee, and only slated to work 1600 hours in the year. In that case, the employer may use the employee's actual hours, with a resulting credit of $3.13/hr.

$5,000 / 1600 = $3.125

The use of a full year is not possible for all benefit calculation situations. In these cases, another period may be allowed if an employer uses a consistent rate of contribution into a bona fide benefit plan, but has difficulty forecasting either the total worker hours or the total contributions for the year. Please contact L&I regarding such situations.

Special Provisions for Certain Defined Contribution Plans – "DOL Exception"

For defined contribution pension plans that provide for a higher hourly rate of contributions to be made for prevailing wage covered work than for non-covered work, the higher rate paid for covered work will be fully credited toward satisfaction of the required prevailing wage rate only if the plan provides for immediate participation and an immediate or essentially immediate vesting schedule (e.g., 100% vesting after an employee works 500 or fewer hours). For such plans the hourly rate of credit is arrived at by calculating the total contributions made on behalf of each worker during the course of the public works project, and dividing that number by the number of hours worked by the same worker on the public works project. This exemption mirrors an exemption provided by the U.S. DOL in its administration of the Davis-Bacon Act.

TIMELY DEPOSIT OF CONTRIBUTIONS TO BENEFIT PLANS: Benefit plan contributions must be made on a regular basis, and no less often than quarterly.

PERIOD USED ("YEAR") FOR ANNUALIZATION PURPOSES: If your plan does not specify a time frame to calculate the credit toward the prevailing wage rate, in most instances L&I will use a calendar year. Otherwise, L&I may look to the time frame you use (e.g., a fiscal year, calendar year, plan year, etc.). The period you adopt must be reasonably consistent over time.

CONTACT L&I FOR ANSWERS TO YOUR PLAN-SPECIFIC QUESTIONS: If this explanation and the above examples do not cover your specific situation, please contact L&I for guidance on the appropriate calculation. Please direct your questions to the Prevailing Wage Office at (360) 902-5335 or by e-mail at PW1@Lni.wa.gov.

How to Calculate Benefit Contributions Based on L&I's Annualization Policy

Example: Health, Pension and Apprentice Contributions Calculation

An employer contributes $10,000 towards a full-time employee's health care coverage from January 1, 2011 to December 31, 2011. A full-time employee works a total of 2,080 hours in a full-time year (52 weeks x 40 hours a week).

Calculation: $10,000 paid during the year / 2,080 hours worked = **$4.81**

The amount to be reported for health coverage in this example is $4.81 per hour. If the employer contributed an equivalent amount to an employee's pension plan during the year (except those plans that meet the "DOL Exception" noted above), the same calculation method would be used to obtain the rate to report for pension benefits.

Example: Vacation and Holiday Calculation

An employee works a total of 1,750 hours in a year and receives 2 weeks (80 hours) of paid vacation time from January 1, 2011, to December 31, 2011. The total amount received in paid vacation is $1,050.

Calculation: $1,050 total vacation pay / 1,750 total hours worked = **$0.60**

The amount to be reported for vacation in this example is $0.60 per hour. If the employee received paid holidays during the year, the same calculation method would be used to obtain the rate to report for the holiday pay.

L&I will assume 2,080 hours per year, per employee, in the absence of evidence to the contrary. If actual hours worked are substantially more than 2,080, or can be reasonably anticipated to be more than 2,080, actual hours must be used for the calculation. If an employer calculates using less than 2,080 hours per employee per year, it must be able to document the reduced schedule which provides the basis for the calculation.

SUMMARY

- Employers must comply with all posting and employee notification requirements provided by applicable federal and state laws concerning usual benefits plans. Employers must also have and make available to L&I upon request, copies of all documents concerning usual benefits as identified in WAC 296-127-014. *See* WAC 296-127-01410.
- Usual benefits are credited on an hourly basis and are expected to accrue at a regular rate. Employers may not count benefits associated with public and private work as if they were only associated with public work projects. L&I will generally apportion or annualize benefit contribution or costs to all hours worked over the course of a year unless an employer provides an alternate schedule and can document actual hours worked. Certain defined contribution pension plans (DOL exception) do not need to meet this annualization requirement.
- Benefit contributions must be deposited on at least a quarterly basis.
- Basic Annualized Calculation Method: Divide the total yearly contributions made by the employer for each individual worker by 2,080 hours (40 hours per week X 52 weeks = 2,080 hours).
- Generally a calendar year is used in calculating credits toward the prevailing wage rate, but there may be instances when calculations are appropriately based on a fiscal year or plan year.

APPENDIX B – Federal Wage Rates

"General Decision Number: WA20260001 01/23/2026

Superseded General Decision Number: WA20250001

State: Washington

Construction Type: Highway

Counties: Washington Statewide.

HIGHWAY (Excludes D.O.E. Hanford Site in Benton and Franklin Counties)

Modification Number	Publication Date
0	01/02/2026
1	01/23/2026

CARP0059-021 06/01/2025

ADAMS, ASOTIN, BENTON, CHELAN, COLUMBIA, DOUGLAS, FERRY, FRANKLIN, GARFIELD, GRANT, KITTITAS, LINCOLN, OKANOGAN, PEND OREILLE, SPOKANE, STEVENS, WALLA WALLA, WHITMAN, AND YAKIMA COUNTIES

	Rates	Fringes
CARPENTER		
Assistant Diver Tender, ROV Tender/Technician	$ 50.76	17.28
Bridge, Dock, and Wharf Carpenter	$ 48.21	17.28
Carpenter	$ 44.21	17.28
Diver Standby	$ 55.24	17.28
Diver Tender, Manifold Operator, ROV Operator	$ 54.24	17.28
Diver Wet	$ 110.48	17.28
Manifold Operator-Mixed Gas	$ 58.24	17.28
Piledriver: Includes driving, pulling, cutting, placing collars, setting, welding, or creosote treated material, on all piling	$ 49.76	17.28

Employees may be required to perform any combination of work within the Diving team/crew, (except for Dive Supervisor) provided they are paid at the highest rate of pay that they received during their shift.

CARP0096-002 06/01/2025

CLALLAM, GRAYS HARBOR, ISLAND, JEFFERSON, KING, KITSAP, LEWIS, MASON, PACIFIC (North of a straight line made by extending the north boundary line of Wahkiakum County west to the Pacific Ocean), PIERCE, SAN JUAN, SKAGIT, SNOHOMISH, THURSTON AND WHATCOM Counties

	Rates	Fringes
MILLWRIGHT	$ 55.39	22.38

CARP0096-007 06/01/2025

SOUTHWEST WASHINGTON: CLARK, COWLITZ, LEWIS (Piledriver only), PACIFIC (South of a straight line made by extending the north boundary line of Wahkiakum County west to Willapa Bay to the Pacific Ocean), SKAMANIA, and WAHKIAKUM Counties.

	Rates	Fringes
MILLWRIGHT	$ 59.35	22.38

---

* CARP0196-004 06/01/2025

CLARK, COWLITZ, *PACIFIC, SKAMANIA, AND WAHKIAKUM COUNTIES
*PORTION OF PACIFIC COUNTY SOUTH OF A STRAIGHT LINE MADE BY EXTENDING THE NORTH BOUNDARY LINE OF WAHKIAKUM COUNTY WEST TO WILLAPA BAY TO THE PACIFIC OCEAN, AND THENCE NORTH THROUGH THE NATURAL WATERWAY TO THE PACIFIC OCEAN (THIS INCLUDES THE ENTIRE PENINSULA WEST OF WILLAPA BAY)

	Rates	Fringes
Piledriver	$ 56.06	16.81

---

* CARP0196-006 06/01/2025

CLALLAM, GRAYS HARBOR, ISLAND, JEFFERSON, KING, KITSAP, LEWIS, MASON, *PACIFIC, PIERCE, SAN JUAN, SKAGIT, SNOHOMISH, THURSTON AND WHATCOM COUNTIES
* PORTION OF PACIFIC COUNTY NORTH OF A STRAIGHT LINE MADE BY EXTENDING THE NORTH BOUNDARY LINE OF WAHKIAKUM COUNTY WEST TO THE PACIFIC OCEAN COUNTIES OR PARTS OF COUNTIES EAST OF THE 120TH MERIDIAN

	Rates	Fringes
Piledriver	$ 65.53	19.13

CARP0206-009 06/01/2025

KING AND KITSAP COUNTIES

	Rates	Fringes
CARPENTER		
BRIDGE CARPENTER	$ 65.58	19.13
CARPENTER	$ 63.98	19.13
DIVER TENDER	$ 71.77	19.13
DIVER	$ 125.44	19.13

CARP0360-006 09/15/2025

PACIFIC COUNTY
PORTION OF PACIFIC COUNTY NORTH OF A STRAIGHT LINE MADE BY EXTENDING THE NORTH BOUNDARY LINE OF WAHKIAKUM COUNTY WEST TO THE PACIFIC OCEAN COUNTIES OR PARTS OF COUNTIES EAST OF THE 120TH MERIDIAN

	Rates	Fringes

Carpenters:

Bridge Carpenter	$ 65.58	19.13
Carpenter/Drywall Hanger	$ 63.98	19.13
Diver Tender	$ 71.77	19.13
Diver	$ 125.44	19.13

Employees may be required to perform any combination of work within the Diving team/crew, (except for Dive Supervisor) provided they are paid at the highest rate of pay that they received during their shift.

CARP0360-007 06/01/2025

PACIFIC COUNTY
PORTION OF PACIFIC COUNTY SOUTH OF A STRAIGHT LINE MADE BY EXTENDING THE NORTH BOUNDARY LINE OF WAHKIAKUM COUNTY WEST TO WILLAPA BAY TO THE PACIFIC OCEAN, AND THENCE NORTH THROUGH THE NATURAL WATERWAY TO THE PACIFIC OCEAN (THIS INCLUDES THE ENTIRE PENINSULA WEST OF WILLAPA BAY)

	Rates	Fringes
Carpenters:		
CARPENTERS	$ 54.69	16.81
DIVERS TENDERS	$ 64.32	16.81
DIVERS	$ 108.33	16.81
DRYWALL	$ 54.59	16.81

Employees may be required to perform any combination of work within the Diving team/crew, (except for Dive Supervisor) provided they are paid at the highest rate of pay that they received during their shift.

CARP0360-013 06/01/2025

GRAYS HARBOR, LEWIS, MASON, PIERCE, AND THURSTON COUNTIES

	Rates	Fringes
CARPENTER		
BRIDGE CARPENTER	$ 65.58	19.13
CARPENTER	$ 63.98	19.13
DIVER TENDER	$ 71.77	19.13
DIVER	$ 125.44	19.13

Employees may be required to perform any combination of work within the Diving team/crew, (except for Dive Supervisor) provided they are paid at the highest rate of pay that they received during their shift.

CARP0425-006 09/15/2025

CLALLAM, ISLAND, JEFFERSON, SAN JUAN, SKAGIT, SNOHOMISH, AND WHATCOM COUNTIES

	Rates	Fringes
CARPENTER		
BRIDGE CARPENTER	$ 65.58	19.13
CARPENTER	$ 63.98	19.13

DIVER TENDER.....$ 71.77 19.13
DIVER.....$ 125.44 19.13

Employees may be required to perform any combination of work within the Diving team/crew, (except for Dive Supervisor) provided they are paid at the highest rate of pay that they received during their shift.

CARP0503-021 06/01/2025

CLARK, COWLITZ, SKAMANIA, AND WAHKIAKUM COUNTIES

	Rates	Fringes
Carpenters:		
CARPENTERS	$ 54.69	16.81
DIVERS TENDERS	$ 64.32	16.81
DIVERS	$ 108.33	16.81
DRYWALL	$ 54.59	16.81

Employees may be required to perform any combination of work within the Diving team/crew, (except for Dive Supervisor) provided they are paid at the highest rate of pay that they received during their shift.

CARP1607-010 06/01/2025

ADAMS, ASOTIN, BENTON, CHELAN, COLUMBIA, DOUGLAS, FERRY, FRANKLIN, GARFIELD, GRANT, KLICKITAT, KITTITAS, LINCOLN, OKANOGAN, PEND OREILLE, SPOKANE, STEVENS, WALLA WALLA, WHITMAN, AND YAKIMA COUNTIES

	Rates	Fringes
MILLWRIGHT	$ 61.62	20.43

ELEC0046-001 08/04/2025

CALLAM, JEFFERSON, KING AND KITSAP COUNTIES

	Rates	Fringes
CABLE SPLICER	$ 83.56	33.71
ELECTRICIAN	$ 75.96	33.48

---

* ELEC0048-003 01/01/2025

CLARK, KLICKITAT AND SKAMANIA COUNTIES

	Rates	Fringes
CABLE SPLICER	$ 44.22	21.50
ELECTRICIAN	$ 63.50	29.73

HOURLY ZONE PAY:

Hourly Zone Pay shall be paid on jobs located outside of the free zone computed from the city center of the following listed cities:

Portland, The Dalles, Hood River, Tillamook, Seaside and Astoria

Zone Pay:
Zone 1: 31-50 miles $1.50/hour
Zone 2: 51-70 miles $3.50/hour
Zone 3: 71-90 miles $5.50/hour
Zone 4: Beyond 90 miles $9.00/hour

*These are not miles driven. Zones are based on Delorrne Street Atlas USA 2006 plus.

ELEC0048-029 01/01/2025

COWLITZ AND WAHKIAKUM COUNTY

	Rates	Fringes
CABLE SPLICER	$ 44.22	21.50
ELECTRICIAN	$ 63.50	29.73

ELEC0073-001 07/01/2025

ADAMS, FERRY, LINCOLN, PEND OREILLE, SPOKANE, STEVENS, WHITMAN COUNTIES

	Rates	Fringes
CABLE SPLICER	$ 34.10	16.68
ELECTRICIAN	$ 49.55	19.09

ELEC0076-002 08/31/2025

GRAYS HARBOR, LEWIS, MASON, PACIFIC, PIERCE, AND THURSTON COUNTIES

	Rates	Fringes
CABLE SPLICER	$ 71.65	26.76
ELECTRICIAN	$ 65.14	26.56

ELEC0112-005 06/01/2025

ASOTIN, BENTON, COLUMBIA, FRANKLIN, GARFIELD, KITTITAS, WALLA WALLA, YAKIMA COUNTIES

	Rates	Fringes
CABLE SPLICER	$ 63.00	27.87
ELECTRICIAN	$ 60.00	27.78

ELEC0191-003 06/01/2022

ISLAND, SAN JUAN, SNOHOMISH, SKAGIT AND WHATCOM COUNTIES

	Rates	Fringes
CABLE SPLICER	$ 44.23	17.73
ELECTRICIAN	$ 53.20	27.51

ELEC0191-004 06/01/2018

CHELAN, DOUGLAS, GRANT AND OKANOGAN COUNTIES

	Rates	Fringes
CABLE SPLICER	$ 40.82	17.63
ELECTRICIAN	$ 42.45	21.34

ENGI0302-092 06/01/2025

KING AND SNOHOMISH COUNTIES

	Rates	Fringes
POWER EQUIPMENT OPERATOR		
Group 1	$ 61.93	27.57
Group 1A	$ 62.85	27.57
Group 1AA	$ 63.75	27.57
Group 1AAA	$ 64.66	27.57
Group 2	$ 61.14	27.57
Group 3	$ 60.46	27.57
Group 4	$ 56.63	27.57

POWER EQUIPMENT OPERATORS CLASSIFICATIONS

Group 1AAA
Cranes: 300 tons and over or 300? of boom including jib with attachments; Cranes Friction: 200 tons and over; Tower Cranes: over 250? in height from base to boom.

Group 1AA
Cranes: 200 tons- 299 tons, or 250? of boom including jib with attachments; Cranes: Friction cranes through 199 tons; Leverman; Shovel, Excavator, Backhoes: over 90 metric tons; Tower Crane: over 175? through 250? in height, base to boom.

Group 1A
Cranes: 100 tons through 199 tons, or 150? of boom (including jib with attachments); Drilling Machine; Overhead, bridge type: 100 tons and over; Tower Crane: up to 175? in height base to boom; Loader: Overhead 8 yards & over; Shovel, Excavator, Backhoes: over 50 metric tons and up to 90 metric tons; Mechanics.

Group 1
Asphalt plant Operators; Cableways; Concrete Pump: Truck mount with boom attachment over 42M; Cranes: 45 tons through 99 tons, under 150? of boom (including jib with attachments); Overhead, bridge type: 45 tons through 99 tons; Derricks: on building work; Hard Tail End Dump: articulating off-road equipment 45 yards & over; Loader: Overhead 6 yards but not including 8 yards; Motor Patrol Graders; Mucking Machine, Mole, Tunnel Drill, Boring, Road Header and/or Shield; Quad 9, HD 41, D10 and over; Remote Control Operator on rubber tired earth moving equipment; Rollagon; Scrapers, self-propelled: 45 yards and over; Spreader: Topsider & Screedman; Shovel, Excavator, Backhoe: over 30 metric tons and up to 50 metric tons; Slipform Pavers; Transporters: all track or truck type; Welder.

Group 2
Batch Plant Operator: concrete; Barrier Machine: (Zipper); Bump Cutter; Cranes: 20 tons through 44 tons with attachments; Overhead, bridge type Crane: 20 tons through 44 tons; Chipper; Concrete Pump: truck mount with boom attachment up to 42M; Crusher; Deck Engineer/Deck Winches (Power); Grade Engineer: using blue prints, cut sheets,

etc.; -Finishing Machine: Bidwell and Gamaco & Similar Equipment; Guardrail Punch; Hard Tail End Dump: articulating off-road equipment under 45 yards; Horizontal/Directional Drill Operator; Loaders: Overhead under 6 yards; Loaders: Plant Feed; Locomotives: all; Material Transfer Device; Piledriver: (other than crane mount); Quick Tower: no cab, under 100 feet in height base to boom; Roto-Mill, Roto-Grinder; Shovel, Excavator, Backhoe, Tractor: 15 to 30 metric tons; Subgrader Trimmer; Scraper: self propelled under 45 yards; Truck Crane Oiler/Driver: 100 tons and over; Truck Mount Portable Conveyor; -Vac Truck (Vactor Guzzler, Hydro Excavator); Yo Yo Pay Dozer.

Group 3
Cranes: through 19 tons with attachments, A-frame over 10 tons; Concrete Pump: Mounted or trailer high pressure line pump, pump high pressure; Conveyors; Dozers: D-9 & under; Drill Oilers: auger type, truck or crane mount; Forklift: 3000 lbs and over with attachments; Horizontal/Directional Drill Locator; Outside Hoists (Elevators and Manlifts), Air Tuggers, Strato; Tower Bucket Elevators; Hydralifts/Boom trucks: over 10 tons; Loaders: elevating type belt; Plant Oiler: asphalt, crusher; Rigger/Signal Person, Bellman (Certified); Roller: plant mix or multi-lift materials; Saws: Concrete; Scrapers: concrete & carry all Service Engineers: equipment; Trenching Machines; Truck Crane Oiler/Driver: under 100 tons; Shovel, Excavator, Backhoe, Tractors: under 15 metric tons.

Group 4
Assistant Engineer; Bobcat; Brooms; Compressor; Concrete Finish Machine: Laser Screed; Cranes, A-frame: 10 tons and under; Elevator and man-lift: permanent and shaft type; Forklifts: under 3000 lbs. with attachments; Gradechecker/Stakeman; Hydralifts/Boom Trucks: 10 tons and under; Oil distributors, Blower Distribution & Mulch Seeding Operator; Pavement Breaker; Posthole Digger: mechanical; Power Plant; Pumps: water; -Rigger and Bellman; Roller: other than plant mix; Wheel Tractors: Farm all type; Shotcrete/Gunite Equipment; Brokk: Remote demolition equipment

---

ENGI0302-093 06/01/2025

SKAGIT AND WHATCOM COUNTIES

	Rates	Fringes
POWER EQUIPMENT OPERATOR		
Group 1	$ 61.47	27.57
Group 1A	$ 62.39	27.57
Group 1AA	$ 63.29	27.57
Group 1AAA	$ 64.19	27.57
Group 2	$ 60.69	27.57
Group 3	$ 60.02	27.57
Group 4	$ 56.19	27.57

POWER EQUIPMENT OPERATORS CLASSIFICATIONS

Group 1AAA
Cranes: 300 tons and over or 300? of boom including jib with attachments; Cranes Friction: 200 tons and over; Tower Cranes: over 250? in height from base to boom.

Group 1AA
Cranes: 200 tons- 299 tons, or 250? of boom including jib with attachments; Cranes: Friction cranes through 199 tons; Leverman; Shovel, Excavator, Backhoes: over 90 metric tons; Tower Crane: over 175? through 250? in height, base to boom.

Group 1A
Cranes: 100 tons through 199 tons, or 150? of boom (including jib with attachments); Drilling Machine; Overhead, bridge type: 100 tons and over; Tower Crane: up to 175? in height base to boom; Loader: Overhead 8 yards & over; Shovel, Excavator, Backhoes: over 50 metric tons and up to 90 metric tons; Mechanics.

Group 1
Asphalt plant Operators; Cableways; Concrete Pump: Truck mount with boom attachment over 42M; Cranes: 45 tons through 99 tons, under 150? of boom (including jib with attachments); Overhead, bridge type: 45 tons through 99 tons; Derricks: on building work; Hard Tail End Dump: articulating off-road equipment 45 yards & over; Loader: Overhead 6 yards but not including 8 yards; Motor Patrol Graders; Mucking Machine, Mole, Tunnel Drill, Boring, Road Header and/or Shield; Quad 9, HD 41, D10 and over; Remote Control Operator on rubber tired earth moving equipment; Rollagon; Scrapers, self-propelled: 45 yards and over; Spreader: Topsider & Screedman; Shovel, Excavator, Backhoe: over 30 metric tons and up to 50 metric tons; Slipform Pavers; Transporters: all track or truck type; Welder.

Group 2
Batch Plant Operator: concrete; Barrier Machine: (Zipper); Bump Cutter; Cranes: 20 tons through 44 tons with attachments; Overhead, bridge type Crane: 20 tons through 44 tons; Chipper; Concrete Pump: truck mount with boom attachment up to 42M; Crusher; Deck Engineer/Deck Winches (Power); Grade Engineer: using blue prints, cut sheets, etc.; -Finishing Machine: Bidwell and Gamaco & Similar Equipment; Guardrail Punch; Hard Tail End Dump: articulating off-road equipment under 45 yards; Horizontal/Directional Drill Operator; Loaders: Overhead under 6 yards; Loaders: Plant Feed; Locomotives: all; Material Transfer Device; Piledriver: (other than crane mount); Quick Tower: no cab, under 100 feet in height base to boom; Roto-Mill, Roto-Grinder; Shovel, Excavator, Backhoe, Tractor: 15 to 30 metric tons; Subgrader Trimmer; Scraper: self propelled under 45 yards; Truck Crane Oiler/Driver: 100 tons and over; Truck Mount Portable Conveyor; -Vac Truck (Vactor Guzzler, Hydro Excavator); Yo Yo Pay Dozer.

Group 3
Cranes: through 19 tons with attachments, A-frame over 10 tons; Concrete Pump: Mounted or trailer high pressure line pump, pump high pressure; Conveyors; Dozers: D-9 & under; Drill Oilers: auger type, truck or crane mount; Forklift: 3000 lbs and over with attachments; Horizontal/Directional Drill Locator; Outside Hoists (Elevators and Manlifts), Air Tuggers, Strato; Tower Bucket Elevators; Hydralifts/Boom trucks: over 10 tons; Loaders: elevating type belt; Plant Oiler: asphalt, crusher; Rigger/Signal Person, Bellman (Certified); Roller: plant mix or multi-lift materials; Saws: Concrete; Scrapers: concrete & carry all Service Engineers: equipment; Trenching Machines; Truck Crane

Oiler/Driver: under 100 tons; Shovel, Excavator, Backhoe, Tractors: under 15 metric tons.

Group 4
Assistant Engineer; Bobcat; Brooms; Compressor; Concrete Finish Machine: Laser Screed; Cranes, A-frame: 10 tons and under; Elevator and man-lift: permanent and shaft type; Forklifts: under 3000 lbs. with attachments; Gradechecker/Stakeman; Hydralifts/Boom Trucks: 10 tons and under; Oil distributors, Blower Distribution & Mulch Seeding Operator; Pavement Breaker; Posthole Digger: mechanical; Power Plant; Pumps: water; -Rigger and Bellman; Roller: other than plant mix; Wheel Tractors: Farm all type; Shotcrete/Gunite Equipment; Brokk: Remote demolition equipment

---

ENGI0302-094 06/01/2025

KITSAP COUNTY

	Rates	Fringes
POWER EQUIPMENT OPERATOR		
Group 1	$ 60.93	27.57
Group 1A	$ 61.83	27.57
Group 1AA	$ 62.73	27.57
Group 1AAA	$ 63.62	27.57
Group 2	$ 60.14	27.57
Group 3	$ 59.49	27.57
Group 4	$ 55.68	27.57

POWER EQUIPMENT OPERATORS CLASSIFICATIONS

Group 1AAA
Cranes: 300 tons and over or 300? of boom including jib with attachments; Cranes Friction: 200 tons and over; Tower Cranes: over 250? in height from base to boom.

Group 1AA
Cranes: 200 tons- 299 tons, or 250? of boom including jib with attachments; Cranes: Friction cranes through 199 tons; Leverman; Shovel, Excavator, Backhoes: over 90 metric tons; Tower Crane: over 175? through 250? in height, base to boom.

Group 1A
Cranes: 100 tons through 199 tons, or 150? of boom (including jib with attachments); Drilling Machine; Overhead, bridge type: 100 tons and over; Tower Crane: up to 175? in height base to boom; Loader: Overhead 8 yards & over; Shovel, Excavator, Backhoes: over 50 metric tons and up to 90 metric tons; Mechanics.

Group 1
Asphalt plant Operators; Cableways; Concrete Pump: Truck mount with boom attachment over 42M; Cranes: 45 tons through 99 tons, under 150? of boom (including jib with attachments); Overhead, bridge type: 45 tons through 99 tons; Derricks: on building work; Hard Tail End Dump: articulating off-road equipment 45 yards & over; Loader: Overhead 6 yards but not including 8 yards; Motor Patrol Graders; Mucking Machine, Mole, Tunnel Drill, Boring, Road Header and/or Shield; Quad 9, HD 41, D10 and over; Remote Control Operator on rubber tired earth moving equipment; Rollagon; Scrapers, self-propelled: 45 yards and over;

Spreader: Topsider & Screedman; Shovel, Excavator, Backhoe: over 30 metric tons and up to 50 metric tons; Slipform Pavers; Transporters: all track or truck type; Welder.

Group 2
Batch Plant Operator: concrete; Barrier Machine: (Zipper); Bump Cutter; Cranes: 20 tons through 44 tons with attachments; Overhead, bridge type Crane: 20 tons through 44 tons; Chipper; Concrete Pump: truck mount with boom attachment up to 42M; Crusher; Deck Engineer/Deck Winches (Power); Grade Engineer: using blue prints, cut sheets, etc.; -Finishing Machine: Bidwell and Gamaco & Similar Equipment; Guardrail Punch; Hard Tail End Dump: articulating off-road equipment under 45 yards; Horizontal/Directional Drill Operator; Loaders: Overhead under 6 yards; Loaders: Plant Feed; Locomotives: all; Material Transfer Device; Piledriver: (other than crane mount); Quick Tower: no cab, under 100 feet in height base to boom; Roto-Mill, Roto-Grinder; Shovel, Excavator, Backhoe, Tractor: 15 to 30 metric tons; Subgrader Trimmer; Scraper: self propelled under 45 yards; Truck Crane Oiler/Driver: 100 tons and over; Truck Mount Portable Conveyor; -Vac Truck (Vactor Guzzler, Hydro Excavator); Yo Yo Pay Dozer.

Group 3
Cranes: through 19 tons with attachments, A-frame over 10 tons; Concrete Pump: Mounted or trailer high pressure line pump, pump high pressure; Conveyors; Dozers: D-9 & under; Drill Oilers: auger type, truck or crane mount; Forklift: 3000 lbs and over with attachments; Horizontal/Directional Drill Locator; Outside Hoists (Elevators and Manlifts), Air Tuggers, Strato; Tower Bucket Elevators; Hydralifts/Boom trucks: over 10 tons; Loaders: elevating type belt; Plant Oiler: asphalt, crusher; Rigger/Signal Person, Bellman (Certified); Roller: plant mix or multi-lift materials; Saws: Concrete; Scrapers: concrete & carry all Service Engineers: equipment; Trenching Machines; Truck Crane Oiler/Driver: under 100 tons; Shovel, Excavator, Backhoe, Tractors: under 15 metric tons.

Group 4
Assistant Engineer; Bobcat; Brooms; Compressor; Concrete Finish Machine: Laser Screed; Cranes, A-frame: 10 tons and under; Elevator and man-lift: permanent and shaft type; Forklifts: under 3000 lbs. with attachments; Gradechecker/Stakeman; Hydralifts/Boom Trucks: 10 tons and under; Oil distributors, Blower Distribution & Mulch Seeding Operator; Pavement Breaker; Posthole Digger: mechanical; Power Plant; Pumps: water; -Rigger and Bellman; Roller: other than plant mix; Wheel Tractors: Farm all type; Shotcrete/Gunite Equipment; Brokk: Remote demolition equipment

---

ENGI0302-095 06/01/2025

CHELAN(WEST OF THE 120TH MERIDIAN), CLALLAM, DOUGLAS(WEST OF THE 120TH MERIDIAN), GRAYS HARBOR, ISLAND, JEFFERSON, KITTITAS(WEST OF THE 120TH MERIDIAN), MASON, OKANOGAN(WEST OF THE 120TH MERIDIAN), SAN JUNA, AND YAKIMA(WEST OF THE 120TH MERIDIAN) COUNTIES

	Rates	Fringes

POWER EQUIPMENT OPERATOR

Group 1	$ 60.67	27.57
Group 1A	$ 61.56	27.57
Group 1AA	$ 62.47	27.57
Group 1AAA	$ 63.35	27.57
Group 2	$ 59.88	27.57
Group 3	$ 59.23	27.57
Group 4	$ 55.43	27.57

POWER EQUIPMENT OPERATORS CLASSIFICATIONS

Group 1AAA
Cranes: 300 tons and over or 300? of boom including jib with attachments; Cranes Friction: 200 tons and over; Tower Cranes: over 250? in height from base to boom.

Group 1AA
Cranes: 200 tons- 299 tons, or 250? of boom including jib with attachments; Cranes: Friction cranes through 199 tons; Leverman; Shovel, Excavator, Backhoes: over 90 metric tons; Tower Crane: over 175? through 250? in height, base to boom.

Group 1A
Cranes: 100 tons through 199 tons, or 150? of boom (including jib with attachments); Drilling Machine; Overhead, bridge type: 100 tons and over; Tower Crane: up to 175? in height base to boom; Loader: Overhead 8 yards & over; Shovel, Excavator, Backhoes: over 50 metric tons and up to 90 metric tons; Mechanics.

Group 1
Asphalt plant Operators; Cableways; Concrete Pump: Truck mount with boom attachment over 42M; Cranes: 45 tons through 99 tons, under 150? of boom (including jib with attachments); Overhead, bridge type: 45 tons through 99 tons; Derricks: on building work; Hard Tail End Dump: articulating off-road equipment 45 yards & over; Loader: Overhead 6 yards but not including 8 yards; Motor Patrol Graders; Mucking Machine, Mole, Tunnel Drill, Boring, Road Header and/or Shield; Quad 9, HD 41, D10 and over; Remote Control Operator on rubber tired earth moving equipment; Rollagon; Scrapers, self-propelled: 45 yards and over; Spreader: Topsider & Screedman; Shovel, Excavator, Backhoe: over 30 metric tons and up to 50 metric tons; Slipform Pavers; Transporters: all track or truck type; Welder.

Group 2
Batch Plant Operator: concrete; Barrier Machine: (Zipper); Bump Cutter; Cranes: 20 tons through 44 tons with attachments; Overhead, bridge type Crane: 20 tons through 44 tons; Chipper; Concrete Pump: truck mount with boom attachment up to 42M; Crusher; Deck Engineer/Deck Winches (Power); Grade Engineer: using blue prints, cut sheets, etc.; -Finishing Machine: Bidwell and Gamaco & Similar Equipment; Guardrail Punch; Hard Tail End Dump: articulating off-road equipment under 45 yards; Horizontal/Directional Drill Operator; Loaders: Overhead under 6 yards; Loaders: Plant Feed; Locomotives: all; Material Transfer Device; Piledriver: (other than crane mount); Quick Tower: no cab, under 100 feet in height base to boom; Roto-Mill, Roto-Grinder; Shovel, Excavator, Backhoe, Tractor: 15 to 30 metric tons; Subgrader Trimmer; Scraper: self propelled under 45 yards; Truck Crane Oiler/Driver: 100 tons and over; Truck Mount Portable

Conveyor; -Vac Truck (Vactor Guzzler, Hydro Excavator); Yo Yo Pay Dozer.

Group 3
Cranes: through 19 tons with attachments, A-frame over 10 tons; Concrete Pump: Mounted or trailer high pressure line pump, pump high pressure; Conveyors; Dozers: D-9 & under; Drill Oilers: auger type, truck or crane mount; Forklift: 3000 lbs and over with attachments; Horizontal/Directional Drill Locator; Outside Hoists (Elevators and Manlifts), Air Tuggers, Strato; Tower Bucket Elevators; Hydralifts/Boom trucks: over 10 tons; Loaders: elevating type belt; Plant Oiler: asphalt, crusher; Rigger/Signal Person, Bellman (Certified); Roller: plant mix or multi-lift materials; Saws: Concrete; Scrapers: concrete & carry all Service Engineers: equipment; Trenching Machines; Truck Crane Oiler/Driver: under 100 tons; Shovel, Excavator, Backhoe, Tractors: under 15 metric tons.

Group 4
Assistant Engineer; Bobcat; Brooms; Compressor; Concrete Finish Machine: Laser Screed; Cranes, A-frame: 10 tons and under; Elevator and man-lift: permanent and shaft type; Forklifts: under 3000 lbs. with attachments; Gradechecker/Stakeman; Hydralifts/Boom Trucks: 10 tons and under; Oil distributors, Blower Distribution & Mulch Seeding Operator; Pavement Breaker; Posthole Digger: mechanical; Power Plant; Pumps: water; -Rigger and Bellman; Roller: other than plant mix; Wheel Tractors: Farm all type; Shotcrete/Gunite Equipment; Brokk: Remote demolition equipment

---

* ENGI0302-124 06/01/2025

ASOTIN, BENTON, FRANKLIN, GARFIELD, LINCOLN, SPOKANE, STEVENS, WALLA WALLA, AND WHITMAN

	Rates	Fringes
POWER EQUIPMENT OPERATOR		
GROUP 1	$ 38.17	23.40
GROUP 2	$ 38.56	23.40
GROUP 3	$ 39.31	23.40
GROUP 4	$ 39.51	23.40
GROUP 5	$ 39.71	23.40
GROUP 6	$ 40.00	23.40
GROUP 7	$ 40.39	23.40
GROUP 8	$ 42.36	23.40

POWER EQUIPMENT OPERATORS CLASSIFICATIONS

GROUP 1: Bit Grinders; Bolt Threading Machine; Compressors (under 2000 CFM, gas, diesel, or electric power); Deck Hand; Fireman & Heater Tender; Hydro-seeder, Mulcher, Nozzleman; Oiler Driver, & Cable Tender, Mucking Machine; Pumpman; Rollers, all types on subgrade, including seal and chip coatings (farm type, Case, John Deere & similar, or Compacting Vibrator), except when pulled by Dozer with operable blade; Welding Machine; Crane Oiler-Driver (CLD required) & Cable Tender, Mucking Machine

GROUP 2: A-frame Truck (single drum); Assistant Refrigeration Plant (under 1000 ton); Assistant Plant Operator, Fireman

or Pugmixer (asphalt); Bagley or Stationary Scraper; Belt Finishing Machine; Blower Operator (cement); Cement Hog; Compressor (2000 CFM or over, 2 or more, gas diesel or electric power); Concrete Saw (multiple cut); Distributor Leverman; Ditch Witch or similar; Elevator Hoisting Materials; Dope Pots (power agitated); Fork Lift or Lumber Stacker, hydra-lift & similar; Gin Trucks (pipeline); Hoist, single drum; Loaders (bucket elevators and conveyors); Longitudinal Float; Mixer (portable-concrete); Pavement Breaker, Hydra-Hammer & similar; Power Broom; Railroad Ballast Regulation Operator (self-propelled); Railroad Power Tamper Operator (self-propelled); Railroad Tamper Jack Operator (self-propelled; Spray Curing Machine (concrete); Spreader Box (self-propelled); Straddle Buggy (Ross & similar on construction job only); Tractor (Farm type R/T with attachment, except Backhoe); Tugger Operator

GROUP 3: A-frame Truck (2 or more drums); Assistant Refrigeration Plant & Chiller Operator (over 1000 ton); Backfillers (Cleveland & similar); Batch Plant & Wet Mix Operator, single unit (concrete); Belt-Crete Conveyors with power pack or similar; Belt Loader (Kocal or similar); Bending Machine; Bob Cat (Skid Steer); Boring Machine (earth); Boring Machine (rock under 8 inch bit) (Quarry Master, Joy or similar); Bump Cutter (Wayne, Saginau or similar); Canal Lining Machine (concrete); Chipper (without crane); Cleaning & Doping Machine (pipeline); Deck Engineer; Elevating Belt-type Loader (Euclid, Barber Green & similar); Elevating Grader-type Loader (Dumor, Adams or similar); Generator Plant Engineers (diesel or electric); Gunnite Combination Mixer & Compressor; Locomotive Engineer; Mixermobile; Mucking Machine; Posthole Auger or Punch; Pump (grout or jet); Soil Stabilizer (P & H or similar); Spreader Machine; Dozer/Tractor (up to D-6 or equivalent) and Traxcavator; Traverse Finish Machine; Turnhead Operator

GROUP 4: Concrete Pumps (squeeze-crete, flow-crete, pump-crete, Whitman & similar); Curb Extruder (asphalt or concrete); Drills (churn, core, calyx or diamond); Equipment Serviceman; Greaser & Oiler; Hoist (2 or more drums or Tower Hoist); Loaders (overhead & front-end, under 4 yds. R/T); Refrigeration Plant Engineer (under 1000 ton); Rubber-tired Skidders (R/T with or without attachments); Surface Heater & Plant Machine; Trenching Machines (under 7 ft. depth capacity); Turnhead (with re-screening); Vacuum Drill (reverse circulation drill under 8 inch bit)

GROUP 5: Backhoe (under 45,000 gw); Backhoe & Hoe Ram (under 3/4 yd.); Carrydeck & Boom Truck (under 25 tons); Cranes (25 tons & under), all attachments including clamshell, dragline; Derricks & Stifflegs (under 65 tons); Drilling Equipment(8 inch bit & over) (Robbins, reverse circulation & similar); Hoe Ram; Piledriving Engineers; Paving (dual drum); Railroad Track Liner Operaotr (self-propelled); Refrigeration Plant Engineer (1000 tons & over); Signalman (Whirleys, Highline Hammerheads or similar); Grade Checker

GROUP 6: Asphalt Plant Operator; Automatic Subgrader (Ditches & Trimmers)(Autograde, ABC, R.A. Hansen & similar on grade wire); Backhoe (45,000 gw and over to 110,000 gw); Backhoes & Hoe Ram (3/4 yd. to 3 yd.); Batch Plant (over 4 units); Batch & Wet Mix Operator (multiple units, 2 & incl. 4); Blade Operator (motor patrol & attachments); Cable Controller (dispatcher); Compactor (self-propelled with

blade); Concrete Pump Boom Truck; Concrete Slip Form Paver; Cranes (over 25 tons, to and including 45 tons), all attachments including clamshell, dragline; Crusher, Grizzle & Screening Plant Operator; Dozer, 834 R/T & similar; Drill Doctor; Loader Operator (front-end & overhead, 4 yds. incl. 8 yds.); Multiple Dozer Units with single blade; Paving Machine (asphalt and concrete); Quad-Track or similar equipment; Rollerman (finishing asphalt pavement); Roto Mill (pavement grinder); Scrapers, all, rubber-tired; Screed Operator; Shovel(under 3 yds.); Trenching Machines (7 ft. depth & over); Tug Boat Operator Vactor guzzler, super sucker; Lime Batch Tank Operator (REcycle Train); Lime Brain Operator (Recycle Train); Mobile Crusher Operator (Recycle Train)

GROUP 7: Backhoe (over 110,000 gw); Backhoes & Hoe Ram (3 yds & over); Blade (finish & bluetop) Automatic, CMI, ABC, Finish Athey & Huber & similar when used as automatic; Cableway Operators; Concrete Cleaning/Decontamination machine operator; Cranes (over 45 tons to but not including 85 tons), all attachments including clamshell and dragine; Derricks & Stiffleys (65 tons & over); Elevating Belt (Holland type); Heavy equipment robotics operator; Loader (360 degrees revolving Koehring Scooper or similar); Loaders (overhead & front-end, over 8 yds. to 10 yds.); Rubber-tired Scrapers (multiple engine with three or more scrapers); Shovels (3 yds. & over); Whirleys & Hammerheads, ALL; H.D. Mechanic; H.D. Welder; Hydraulic Platform Trailers (Goldhofer, Shaurerly andSimilar); Ultra High Pressure Wateriet Cutting Tool System Operator (30,000 psi); Vacuum Blasting Machine Operator

GROUP 8: Cranes (85 tons and over, and all climbing, overhead,rail and tower), all attachments including clamshell, dragline; Loaders (overhead and front-end, 10 yards and over); Helicopter Pilot

---

* ENGI0302-125 06/01/2025

ADAMS, CHELAN (EAST OF THE 120TH MERIDIAN), COLUMBIA, DOUGLAS (EAST OF THE 120TH MERIDIAN), FERRY, GRANT, OKANOGAN (EAST OF THE 120TH MERIDIAN), PEND OREILLE, STEVENS, AND YAKIMA (EAST OF THE 120TH MERIDIAN) COUNTIES

	Rates	Fringes
POWER EQUIPMENT OPERATOR		
GROUP 1	$ 41.17	23.40
GROUP 2	$ 41.56	23.40
GROUP 3	$ 42.31	23.40
GROUP 4	$ 42.51	23.40
GROUP 5	$ 42.71	23.40
GROUP 6	$ 43.05	23.40
GROUP 7	$ 43.39	23.40
GROUP 8	$ 45.36	23.40

POWER EQUIPMENT OPERATORS CLASSIFICATIONS

GROUP 1: Bit Grinders; Bolt Threading Machine; Compressors (under 2000 CFM, gas, diesel, or electric power); Deck Hand; Fireman & Heater Tender; Hydro-seeder, Mulcher, Nozzleman; Oiler Driver, & Cable Tender, Mucking Machine; Pumpman; Rollers, all types on subgrade, including seal and

chip coatings (farm type, Case, John Deere & similar, or Compacting Vibrator), except when pulled by Dozer with operable blade; Welding Machine; Crane Oiler-Driver (CLD required) & Cable Tender, Mucking Machine

GROUP 2: A-frame Truck (single drum); Assistant Refrigeration Plant (under 1000 ton); Assistant Plant Operator, Fireman or Pugmixer (asphalt); Bagley or Stationary Scraper; Belt Finishing Machine; Blower Operator (cement); Cement Hog; Compressor (2000 CFM or over, 2 or more, gas diesel or electric power); Concrete Saw (multiple cut); Distributor Leverman; Ditch Witch or similar; Elevator Hoisting Materials; Dope Pots (power agitated); Fork Lift or Lumber Stacker, hydra-lift & similar; Gin Trucks (pipeline); Hoist, single drum; Loaders (bucket elevators and conveyors); Longitudinal Float; Mixer (portable-concrete); Pavement Breaker, Hydra-Hammer & similar; Power Broom; Railroad Ballast Regulation Operator (self-propelled); Railroad Power Tamper Operator (self-propelled); Railroad Tamper Jack Operator (self-propelled; Spray Curing Machine (concrete); Spreader Box (self-propelled); Straddle Buggy (Ross & similar on construction job only); Tractor (Farm type R/T with attachment, except Backhoe); Tugger Operator

GROUP 3: A-frame Truck (2 or more drums); Assistant Refrigeration Plant & Chiller Operator (over 1000 ton); Backfillers (Cleveland & similar); Batch Plant & Wet Mix Operator, single unit (concrete); Belt-Crete Conveyors with power pack or similar; Belt Loader (Kocal or similar); Bending Machine; Bob Cat (Skid Steer); Boring Machine (earth); Boring Machine (rock under 8 inch bit) (Quarry Master, Joy or similar); Bump Cutter (Wayne, Saginau or similar); Canal Lining Machine (concrete); Chipper (without crane); Cleaning & Doping Machine (pipeline); Deck Engineer; Elevating Belt-type Loader (Euclid, Barber Green & similar); Elevating Grader-type Loader (Dumor, Adams or similar); Generator Plant Engineers (diesel or electric); Gunnite Combination Mixer & Compressor; Locomotive Engineer; Mixermobile; Mucking Machine; Posthole Auger or Punch; Pump (grout or jet); Soil Stabilizer (P & H or similar); Spreader Machine; Dozer/Tractor (up to D-6 or equivalent) and Traxcavator; Traverse Finish Machine; Turnhead Operator

GROUP 4: Concrete Pumps (squeeze-crete, flow-crete, pump-crete, Whitman & similar); Curb Extruder (asphalt or concrete); Drills (churn, core, calyx or diamond); Equipment Serviceman; Greaser & Oiler; Hoist (2 or more drums or Tower Hoist); Loaders (overhead & front-end, under 4 yds. R/T); Refrigeration Plant Engineer (under 1000 ton); Rubber-tired Skidders (R/T with or without attachments); Surface Heater & Plant Machine; Trenching Machines (under 7 ft. depth capacity); Turnhead (with re-screening); Vacuum Drill (reverse circulation drill under 8 inch bit)

GROUP 5: Backhoe (under 45,000 gw); Backhoe & Hoe Ram (under 3/4 yd.); Carrydeck & Boom Truck (under 25 tons); Cranes (25 tons & under), all attachments including clamshell, dragline; Derricks & Stifflegs (under 65 tons); Drilling Equipment(8 inch bit & over) (Robbins, reverse circulation & similar); Hoe Ram; Piledriving Engineers; Paving (dual drum); Railroad Track Liner Operaotr (self-propelled); Refrigeration Plant Engineer (1000 tons & over); Signalman (Whirleys, Highline Hammerheads or similar); Grade Checker

GROUP 6: Asphalt Plant Operator; Automatic Subgrader (Ditches & Trimmers)(Autograde, ABC, R.A. Hansen & similar on grade wire); Backhoe (45,000 gw and over to 110,000 gw); Backhoes & Hoe Ram (3/4 yd. to 3 yd.); Batch Plant (over 4 units); Batch & Wet Mix Operator (multiple units, 2 & incl. 4); Blade Operator (motor patrol & attachments); Cable Controller (dispatcher); Compactor (self-propelled with blade); Concrete Pump Boom Truck; Concrete Slip Form Paver; Cranes (over 25 tons, to and including 45 tons), all attachments including clamshell, dragline; Crusher, Grizzle & Screening Plant Operator; Dozer, 834 R/T & similar; Drill Doctor; Loader Operator (front-end & overhead, 4 yds. incl. 8 yds.); Multiple Dozer Units with single blade; Paving Machine (asphalt and concrete); Quad-Track or similar equipment; Rollerman (finishing asphalt pavement); Roto Mill (pavement grinder); Scrapers, all, rubber-tired; Screed Operator; Shovel(under 3 yds.); Trenching Machines (7 ft. depth & over); Tug Boat Operator Vactor guzzler, super sucker; Lime Batch Tank Operator (REcycle Train); Lime Brain Operator (Recycle Train); Mobile Crusher Operator (Recycle Train)

GROUP 7: Backhoe (over 110,000 gw); Backhoes & Hoe Ram (3 yds & over); Blade (finish & bluetop) Automatic, CMI, ABC, Finish Athey & Huber & similar when used as automatic; Cableway Operators; Concrete Cleaning/Decontamination machine operator; Cranes (over 45 tons to but not including 85 tons), all attachments including clamshell and dragine; Derricks & Stiffleys (65 tons & over); Elevating Belt (Holland type); Heavy equipment robotics operator; Loader (360 degrees revolving Koehring Scooper or similar); Loaders (overhead & front-end, over 8 yds. to 10 yds.); Rubber-tired Scrapers (multiple engine with three or more scrapers); Shovels (3 yds. & over); Whirleys & Hammerheads, ALL; H.D. Mechanic; H.D. Welder; Hydraulic Platform Trailers (Goldhofer, Shaurerly andSimilar); Ultra High Pressure Wateriet Cutting Tool System Operator (30,000 psi); Vacuum Blasting Machine Operator

GROUP 8: Cranes (85 tons and over, and all climbing, overhead,rail and tower), all attachments including clamshell, dragline; Loaders (overhead and front-end, 10 yards and over); Helicopter Pilot

---

ENGI0612-001 06/01/2025

PIERCE County

ON PROJECTS DESCRIBED IN FOOTNOTE A BELOW, THE RATE FOR EACH GROUP SHALL BE 90% OF THE BASE RATE PLUS FULL FRINGE BENEFITS. ON ALL OTHER WORK, THE FOLLOWING RATES APPLY.

Zone 1 (0-25 radius miles):

	Rates	Fringes
POWER EQUIPMENT OPERATOR		
GROUP 1A	$ 62.32	27.32
GROUP 1AA	$ 63.22	27.32
GROUP 1AAA	$ 64.11	27.32
GROUP 1	$ 61.41	27.32
GROUP 2	$ 60.63	27.32
GROUP 3	$ 59.96	27.32

GROUP 4.....$ 56.15 27.32

Zone Differential (Add to Zone 1 rates):
Zone 2 (26-45 radius miles) = $1.00
Zone 3 (Over 45 radius miles) - $1.30

BASEPOINTS: CENTRALIA, OLYMPIA, TACOMA

POWER EQUIPMENT OPERATORS CLASSIFICATIONS

GROUP 1 AAA - Cranes-over 300 tons or 300 ft of boom (including jib with attachments)

GROUP 1AA - Cranes- 200 tonsto 300 tons, or 250 ft of boom (including jib with attachments; Tower crane over 175 ft in height, bas to boom

GROUP 1A - Cranes, 100 tons thru 199 tons, or 150 ft of boom (including jib with attachments); Crane-overhead, bridge type, 100 tons and over; Tower crane up to 175 ft in height base to boom; Loaders-overhead, 8 yards and over; Shovels, excavator, backhoes-6 yards and over with attachments

GROUP 1 - Cableway; Cranes 45 tons thru 99 tons under 150 ft of boom (including jib with attachments); Crane-overhead, bridge type, 45 tons thru 99 tons; Derricks on building work; Excavator, shovel, backhoes over 3 yards and under 6 yards; Hard tail end dump articulating off-road equipment 45 yards and over; Loader- overhead, 6 yards to, but not including, 8 yards; Mucking machine, mole, tunnel, drill and/or shield; Quad 9 HD 41, D-10; Remote control operator on rubber tired earth moving equipment; Rollagon; Scrapers-self-propelled 45 yards and over; Slipform pavers; Transporters, all track or truck type

GROUP 2 - Barrier machine (zipper); Batch Plant Operator-concrete; Bump Cutter; Cranes, 20 tons thru 44 tons with attachments; Crane-Overhead, bridge type, 20 tons through 44 tons; Chipper; Concrete pump-truck mount with boom attachment; Crusher; Deck engineer/deck winches (power); Drilling machine; Excavator, shovel, backhoe-3 yards and under; Finishing machine, Bidwell, Gamaco and similar equipment; Guardrail punch; Loaders, overhead under 6 yards; Loaders-plant feed; Locomotives-all; Mechanics- all; Mixers, asphalt plant; Motor patrol graders, finishing; Piledriver (other than crane mount); Roto-mill, roto-grinder; Screedman, spreader, topside operator-Blaw Knox, Cedar Rapids, Jaeger, Caterpillar, Barbar Green; Scraper-self- propelled, hard tail end dump, articulating off-road equipment- under 45 yards; Subgrader trimmer; Tractors, backhoe over 75 hp; Transfer material service machine-shuttle buggy, Blaw Knox- Roadtec; Truck Crane oiler/driver-100 tons and over; Truck Mount Portable Conveyor; Yo Yo pay

GROUP 3 - Conveyors; Cranes through 19 tons with attachments; Crane-A-frame over 10 tons; Drill oilers-auger type, truck or crane mount; Dozer-D-9 and under; Forklift-3000 lbs. and over with attachments; Horizontal/directional drill locator; Outside Hoists-(elevators and manlifts), air tuggers, strato tower bucket elevators; Hydralifts/boom trucks over 10 tons; Loaders-elevating type, belt; Motor patrol grader-nonfinishing; Plant oiler- asphalt, crusher; Pump-Concrete; Roller, plant mix or multi-lfit materials; Saws-concrete; Scrapers, concrete and carry all; Service

engineers-equipment; Trenching machines; Truck crane oiler/driver under 100 tons; Tractors, backhoe under 75 hp

GROUP 4 - Assistant Engineer; Bobcat; Brooms; Compressor; Concrete Finish Machine-laser screed; Cranes A-frame 10 tons and under; Elevator and manlift (permanent and shaft type); Forklifts-under 3000 lbs. with attachments; Gradechecker, stakehop; Hydralifts/boom trucks, 10 tons and under; Oil distributors, blower distribution and mulch seeding operator; Pavement breaker; Posthole digger-mechanical; Power plant; Pumps-water; Rigger and Bellman; Roller-other than plant mix; Wheel Tractors, farmall type; Shotcrete/gunite equipment operator

FOOTNOTE A- Reduced rates may be paid on the following:

1. Projects involving work on structures such as buildings and bridges whose total value is less than $1.5 million excluding mechanical, electrical, and utility portions of the contract.

2. Projects of less than $1 million where no building is involved. Surfacing and paving included, but utilities excluded.

3. Marine projects (docks, wharfs, etc.) less than $150,000.

HANDLING OF HAZARDOUS WASTE MATERIALS: Personnel in all craft classifications subject to working inside a federally designated hazardous perimeter shall be elgible for compensation in accordance with the following group schedule relative to the level of hazardous waste as outlined in the specific hazardous waste project site safety plan.

H-1 Base wage rate when on a hazardous waste site when not outfitted with protective clothing, Class ""D"" Suit - Base wage rate plus $ .50 per hour.
H-2 Class ""C"" Suit - Base wage rate plus $1.00 per hour.
H-3 Class ""B"" Suit - Base wage rate plus $1.50 per hour.
H-4 Class ""A"" Suit - Base wage rate plus $2.00 per hour.

ENGI0612-008 06/01/2025

LEWIS AND PACIFIC (PORTION LYING NORTH OF A PARALLEL LINE EXTENDING WEST FROM THE NORTHERN BOUNDARY OF WAHKAIKUM COUNTY TO THE SEA) COUNTIES

ON PROJECTS DESCRIBED IN FOOTNOTE A BELOW, THE RATE FOR EACH GROUP SHALL BE 90% OF THE BASE RATE PLUS FULL FRINGE BENEFITS. ON ALL OTHER WORK, THE FOLLOWING RATES APPLY.

Zone 1 (0-25 radius miles):

	Rates	Fringes
POWER EQUIPMENT OPERATOR		
GROUP 1A	$ 61.22	27.32
GROUP 1AA	$ 62.12	27.32
GROUP 1AAA	$ 62.99	27.32
GROUP 1	$ 60.32	27.32
GROUP 2	$ 59.56	27.32
GROUP 3	$ 58.89	27.32

GROUP 4.....$ 55.13 27.32

Zone Differential (Add to Zone 1 rates):
Zone 2 (26-45 radius miles) = $1.00
Zone 3 (Over 45 radius miles) - $1.30

BASEPOINTS: CENTRALIA, OLYMPIA, TACOMA

POWER EQUIPMENT OPERATORS CLASSIFICATIONS

GROUP 1 AAA - Cranes-over 300 tons or 300 ft of boom (including jib with attachments)

GROUP 1AA - Cranes- 200 tonsto 300 tons, or 250 ft of boom (including jib with attachments; Tower crane over 175 ft in height, bas to boom

GROUP 1A - Cranes, 100 tons thru 199 tons, or 150 ft of boom (including jib with attachments); Crane-overhead, bridge type, 100 tons and over; Tower crane up to 175 ft in height base to boom; Loaders-overhead, 8 yards and over; Shovels, excavator, backhoes-6 yards and over with attachments

GROUP 1 - Cableway; Cranes 45 tons thru 99 tons under 150 ft of boom (including jib with attachments); Crane-overhead, bridge type, 45 tons thru 99 tons; Derricks on building work; Excavator, shovel, backhoes over 3 yards and under 6 yards; Hard tail end dump articulating off-road equipment 45 yards and over; Loader- overhead, 6 yards to, but not including, 8 yards; Mucking machine, mole, tunnel, drill and/or shield; Quad 9 HD 41, D-10; Remote control operator on rubber tired earth moving equipment; Rollagon; Scrapers-self-propelled 45 yards and over; Slipform pavers; Transporters, all track or truck type

GROUP 2 - Barrier machine (zipper); Batch Plant Operator-concrete; Bump Cutter; Cranes, 20 tons thru 44 tons with attachments; Crane-Overhead, bridge type, 20 tons through 44 tons; Chipper; Concrete pump-truck mount with boom attachment; Crusher; Deck engineer/deck winches (power); Drilling machine; Excavator, shovel, backhoe-3 yards and under; Finishing machine, Bidwell, Gamaco and similar equipment; Guardrail punch; Loaders, overhead under 6 yards; Loaders-plant feed; Locomotives-all; Mechanics- all; Mixers, asphalt plant; Motor patrol graders, finishing; Piledriver (other than crane mount); Roto-mill, roto-grinder; Screedman, spreader, topside operator-Blaw Knox, Cedar Rapids, Jaeger, Caterpillar, Barbar Green; Scraper-self- propelled, hard tail end dump, articulating off-road equipment- under 45 yards; Subgrader trimmer; Tractors, backhoe over 75 hp; Transfer material service machine-shuttle buggy, Blaw Knox- Roadtec; Truck Crane oiler/driver-100 tons and over; Truck Mount Portable Conveyor; Yo Yo pay

GROUP 3 - Conveyors; Cranes through 19 tons with attachments; Crane-A-frame over 10 tons; Drill oilers-auger type, truck or crane mount; Dozer-D-9 and under; Forklift-3000 lbs. and over with attachments; Horizontal/directional drill locator; Outside Hoists-(elevators and manlifts), air tuggers, strato tower bucket elevators; Hydralifts/boom trucks over 10 tons; Loaders-elevating type, belt; Motor patrol grader-nonfinishing; Plant oiler- asphalt, crusher; Pump-Concrete; Roller, plant mix or multi-lfit materials; Saws-concrete; Scrapers, concrete and carry all; Service

engineers-equipment; Trenching machines; Truck crane oiler/driver under 100 tons; Tractors, backhoe under 75 hp

GROUP 4 - Assistant Engineer; Bobcat; Brooms; Compressor; Concrete Finish Machine-laser screed; Cranes A-frame 10 tons and under; Elevator and manlift (permanent and shaft type); Forklifts-under 3000 lbs. with attachments; Gradechecker, stakehop; Hydralifts/boom trucks, 10 tons and under; Oil distributors, blower distribution and mulch seeding operator; Pavement breaker; Posthole digger-mechanical; Power plant; Pumps-water; Rigger and Bellman; Roller-other than plant mix; Wheel Tractors, farmall type; Shotcrete/gunite equipment operator

FOOTNOTE A- Reduced rates may be paid on the following:
1. Projects involving work on structures such as buildings and bridges whose total value is less than $1.5 million excluding mechanical, electrical, and utility portions of the contract.

2. Projects of less than $1 million where no building is involved. Surfacing and paving included, but utilities excluded.

3. Marine projects (docks, wharfs, etc.) less than $150,000.

HANDLING OF HAZARDOUS WASTE MATERIALS: Personnel in all craft classifications subject to working inside a federally designated hazardous perimeter shall be elgible for compensation in accordance with the following group schedule relative to the level of hazardous waste as outlined in the specific hazardous waste project site safety plan.

H-1 Base wage rate when on a hazardous waste site when not outfitted with protective clothing, Class ""D"" Suit - Base wage rate plus $ .50 per hour.
H-2 Class ""C"" Suit - Base wage rate plus $1.00 per hour.
H-3 Class ""B"" Suit - Base wage rate plus $1.50 per hour.
H-4 Class ""A"" Suit - Base wage rate plus $2.00 per hour.

ENGI0612-012 06/01/2025

THURSTON COUNTY

ON PROJECTS DESCRIBED IN FOOTNOTE A BELOW, THE RATE FOR EACH GROUP SHALL BE 90% OF THE BASE RATE PLUS FULL FRINGE BENEFITS. ON ALL OTHER WORK, THE FOLLOWING RATES APPLY.

Zone 1 (0-25 radius miles):

	Rates	Fringes
POWER EQUIPMENT OPERATOR		
GROUP 1A	$ 61.81	27.32
GROUP 1AA	$ 62.71	27.32
GROUP 1AAA	$ 63.59	27.32
GROUP 1	$ 60.91	27.32
GROUP 2	$ 60.14	27.32
GROUP 3	$ 59.46	27.32
GROUP 4	$ 55.68	27.32

Zone Differential (Add to Zone 1 rates):
Zone 2 (26-45 radius miles) = $1.00
Zone 3 (Over 45 radius miles) - $1.30

BASEPOINTS: CENTRALIA, OLYMPIA, TACOMA

POWER EQUIPMENT OPERATORS CLASSIFICATIONS

GROUP 1 AAA - Cranes-over 300 tons or 300 ft of boom (including jib with attachments)

GROUP 1AA - Cranes- 200 tonsto 300 tons, or 250 ft of boom (including jib with attachments; Tower crane over 175 ft in height, bas to boom

GROUP 1A - Cranes, 100 tons thru 199 tons, or 150 ft of boom (including jib with attachments); Crane-overhead, bridge type, 100 tons and over; Tower crane up to 175 ft in height base to boom; Loaders-overhead, 8 yards and over; Shovels, excavator, backhoes-6 yards and over with attachments

GROUP 1 - Cableway; Cranes 45 tons thru 99 tons under 150 ft of boom (including jib with attachments); Crane-overhead, bridge type, 45 tons thru 99 tons; Derricks on building work; Excavator, shovel, backhoes over 3 yards and under 6 yards; Hard tail end dump articulating off-road equipment 45 yards and over; Loader- overhead, 6 yards to, but not including, 8 yards; Mucking machine, mole, tunnel, drill and/or shield; Quad 9 HD 41, D-10; Remote control operator on rubber tired earth moving equipment; Rollagon; Scrapers-self-propelled 45 yards and over; Slipform pavers; Transporters, all track or truck type

GROUP 2 - Barrier machine (zipper); Batch Plant Operator-concrete; Bump Cutter; Cranes, 20 tons thru 44 tons with attachments; Crane-Overhead, bridge type, 20 tons through 44 tons; Chipper; Concrete pump-truck mount with boom attachment; Crusher; Deck engineer/deck winches (power); Drilling machine; Excavator, shovel, backhoe-3 yards and under; Finishing machine, Bidwell, Gamaco and similar equipment; Guardrail punch; Loaders, overhead under 6 yards; Loaders-plant feed; Locomotives-all; Mechanics- all; Mixers, asphalt plant; Motor patrol graders, finishing; Piledriver (other than crane mount); Roto-mill, roto-grinder; Screedman, spreader, topside operator-Blaw Knox, Cedar Rapids, Jaeger, Caterpillar, Barbar Green; Scraper-self- propelled, hard tail end dump, articulating off-road equipment- under 45 yards; Subgrader trimmer; Tractors, backhoe over 75 hp; Transfer material service machine-shuttle buggy, Blaw Knox- Roadtec; Truck Crane oiler/driver-100 tons and over; Truck Mount Portable Conveyor; Yo Yo pay

GROUP 3 - Conveyors; Cranes through 19 tons with attachments; Crane-A-frame over 10 tons; Drill oilers-auger type, truck or crane mount; Dozer-D-9 and under; Forklift-3000 lbs. and over with attachments; Horizontal/directional drill locator; Outside Hoists-(elevators and manlifts), air tuggers, strato tower bucket elevators; Hydralifts/boom trucks over 10 tons; Loaders-elevating type, belt; Motor patrol grader-nonfinishing; Plant oiler- asphalt, crusher; Pump-Concrete; Roller, plant mix or multi-lfit materials; Saws-concrete; Scrapers, concrete and carry all; Service engineers-equipment; Trenching machines; Truck crane oiler/driver under 100 tons; Tractors, backhoe under 75 hp

GROUP 4 - Assistant Engineer; Bobcat; Brooms; Compressor; Concrete Finish Machine-laser screed; Cranes A-frame 10 tons and under; Elevator and manlift (permanent and shaft type); Forklifts-under 3000 lbs. with attachments; Gradechecker, stakehop; Hydralifts/boom trucks, 10 tons and under; Oil distributors, blower distribution and mulch seeding operator; Pavement breaker; Posthole digger-mechanical; Power plant; Pumps-water; Rigger and Bellman; Roller-other than plant mix; Wheel Tractors, farmall type; Shotcrete/gunite equipment operator

FOOTNOTE A- Reduced rates may be paid on the following:

1. Projects involving work on structures such as buildings and bridges whose total value is less than $1.5 million excluding mechanical, electrical, and utility portions of the contract.

2. Projects of less than $1 million where no building is involved. Surfacing and paving included, but utilities excluded.

3. Marine projects (docks, wharfs, etc.) less than $150,000.

HANDLING OF HAZARDOUS WASTE MATERIALS: Personnel in all craft classifications subject to working inside a federally designated hazardous perimeter shall be elgible for compensation in accordance with the following group schedule relative to the level of hazardous waste as outlined in the specific hazardous waste project site safety plan.

H-1 Base wage rate when on a hazardous waste site when not outfitted with protective clothing, Class ""D"" Suit - Base wage rate plus $ .50 per hour.
H-2 Class ""C"" Suit - Base wage rate plus $1.00 per hour.
H-3 Class ""B"" Suit - Base wage rate plus $1.50 per hour.
H-4 Class ""A"" Suit - Base wage rate plus $2.00 per hour.

ENGI0701-002 01/01/2025

CLARK, COWLITZ, KLICKKITAT, PACIFIC (SOUTH), SKAMANIA, AND WAHKIAKUM COUNTIES

POWER RQUIPMENT OPERATORS: ZONE 1

	Rates	Fringes
POWER EQUIPMENT OPERATOR		
GROUP 1	$ 58.94	17.15
GROUP 1A	$ 61.10	17.15
GROUP 1B	$ 63.26	17.15
GROUP 2	$ 57.03	17.15
GROUP 3	$ 55.88	17.15
GROUP 4	$ 52.55	17.15
GROUP 5	$ 51.31	17.15
GROUP 6	$ 48.09	17.15

Zone Differential (add to Zone 1 rates):
Zone 2 - $3.00
Zone 3 - $6.00

For the following metropolitan counties: MULTNOMAH; CLACKAMAS; MARION; WASHINGTON; YAMHILL; AND COLUMBIA; CLARK; AND COWLITZ COUNTY, WASHINGTON WITH MODIFICATIONS AS INDICATED:

All jobs or projects located in Multnomah, Clackamas and Marion Counties, West of the western boundary of Mt. Hood National Forest and West of Mile Post 30 on Interstate 84 and West of Mile Post 30 on State Highway 26 and West of Mile Post 30 on Highway 22 and all jobs or projects located in Yamhill County, Washington County and Columbia County and all jobs or porjects located in Clark & Cowlitz County, Washington except that portion of Cowlitz County in the Mt. St. Helens ""Blast Zone"" shall receive Zone I pay for all classifications.

All jobs or projects located in the area outside the identified boundary above, but less than 50 miles from the Portland City Hall shall receive Zone II pay for all classifications.

All jobs or projects located more than 50 miles from the Portland City Hall, but outside the identified border above, shall receive Zone III pay for all classifications.

For the following cities: ALBANY; BEND; COOS BAY; EUGENE; GRANTS PASS; KLAMATH FALLS; MEDFORD; ROSEBURG

All jobs or projects located within 30 miles of the respective city hall of the above mentioned cities shall receive Zone I pay for all classifications.

All jobs or projects located more than 30 miles and less than 50 miles from the respective city hall of the above mentioned cities shall receive Zone II pay for all classifications.

All jobs or projects located more than 50 miles from the respective city hall of the above mentioned cities shall receive Zone III pay for all classifications.

POWER EQUIPMENT OPERATORS CLASSIFICATIONS

Group 1
Concrete Batch Plan and or Wet mix three (3) units or more; Crane, Floating one hundred and fifty (150) ton but less than two hundred and fifty (250) ton; Crane, two hundred (200) ton through two hundred ninety nine (299) ton with two hundred foot (200') boom or less (including jib, inserts and/or attachments); Crane, ninety (90) ton through one hundred ninety nine (199) ton with over two hundred (200') boom Including jib, inserts and/or attachments); Crane, Tower Crane with one hundred seventy five foot (175') tower or less and with less than two hundred foot (200') jib; Crane, Whirley ninety (90) ton and over; Helicopter when used in erecting work

Group 1A
Crane, floating two hundred fifty (250) ton and over; Crane, two hundred (200) ton through two hundred ninety nine (299) ton, with over two hundred foot (200') boom (including jib, inserts and/or attachments); Crane, three hundred (300) ton through three hundred ninety nine (399) ton; Crane, Tower Crane with over one hundred seventy five foot (175') tower or over two hundred foot (200') jib;

Crane, tower Crane on rail system or 2nd tower or more in work radius

Group 1B

Crane, three hundred (300) ton through three hundred ninety nine (399) ton, with over two hundred foot (200') boom (including jib, inserts and/or attachments); Floating crane, three hundred fifty (350) ton and over; Crane, four hundred (400) ton and over

Group 2

Asphalt Plant (any type); Asphalt Roto-Mill, pavement profiler eight foot (8') lateral cut and over; Auto Grader or ""Trimmer""; Blade, Robotic; Bulldozer, Robotic Equipment (any type); Bulldozer, over one hundred twenty thousand (120,000) lbs. and above; Concrete Batch Plant and/or Wet Mix one (1) and two (2) drum; Concrete Diamond Head Profiler; Canal Trimmer; Concrete, Automatic Slip Form Paver (Assistant to the Operator required); Crane, Boom Truck fifty (50) ton and with over one hundred fifty foot (150') boom and over; Crane, Floating (derrick barge) thirty (30) ton but less than one hundred fifty (150) ton; Crane, Cableway twenty-five (25) ton and over; Crane, Floating Clamshell three (3) cu. Yds. And over; Crane, ninety (90) ton through one hundred ninety nine (199) ton up to and including two hundred foot (200') of boom (including jib inserts and/or attachments); Crane, fifty (50) ton through eighty nine (89) ton with over one hundred fifty foot (150') boom (including jib inserts and/or attachments); Crane, Whirley under ninety (90) ton; Crusher Plant; Excavator over one hundred thirty thousand (130,000) lbs.; Loader one hundred twenty thousand (120,000) lbs. and above; Remote Controlled Earth Moving Equipment; Shovel, Dragline, Clamshell, five (5) cu. Yds. And over; Underwater Equipment remote or otherwise, when used in construction work; Wheel Excavator any size

Group 3

Bulldozer, over seventy thousand (70,000) lbs. up to and including one hundred twenty thousand (120,000) lbs.; Crane, Boom Truck fifty (50) ton and over with less than one hundred fifty foot (150') boom; Crane, fifty (50) ton through eighty nine (89) ton with one hundred fifty foot (150') boom or less (including jib inserts and/or attachments); Crane, Shovel, Dragline or Clamshell three (3) cu. yds. but less than five (5) cu. Yds.; Excavator over eighty thousand (80,000) lbs. through one hundred thirty thousand (130,000) lbs.; Loader sixty thousand (60,000) lbs. and less than one hundred twenty thousand (120,000) lbs.

Group 4

Asphalt, Screed; Asphalt Paver; Asphalt Roto-Mill, pavement profiler, under eight foot (8') lateral cut; Asphalt, Material Transfer Vehicle Operator; Back Filling Machine; Backhoe, Robotic, track and wheel type up to and including twenty thousand (20,000) lbs. with any attachments; Blade (any type); Boatman; Boring Machine; Bulldozer over twenty thousand (20,000) lbs. and more than one hundred (100) horse up to seventy thousand (70,000) lbs.; Cable-Plow (any type); Cableway up to twenty five (25) ton; Cat Drill (John Henry); Chippers; Compactor, multi-engine; Compactor, Robotic; Compactor with blade self-propelled; Concrete,

Breaker; Concrete, Grout Plant; Concrete, Mixer Mobile; Concrete, Paving Road Mixer; Concrete, Reinforced Tank Banding Machine; Crane, Boom Truck twenty (20) ton and under fifty (50) ton; Crane, Bridge Locomotive, Gantry and Overhead; Crane, Carry Deck; Crane, Chicago Boom and similar types; Crane, Derrick Operator, under one hundred (100) ton; Crane, Floating Clamshell, Dragline, etc. Operator, under three (3) cu. yds. Or less than thirty (30) ton; Crane, under fifty (50) ton; Crane, Quick Tower under one hundred foot (100') in height and less than one hundred fifty foot (150') jib (on rail included); Diesel-Electric Engineer (Plant or Floating); Directional Drill over twenty thousand (20,000) lbs. pullback; Drill Cat Operator; Drill Doctor and/or Bit Grinder; Driller, Percussion, Diamond, Core, Cable, Rotary and similar type; Excavator Operator over twenty thousand (20,000) lbs. through eighty thousand (80,000) lbs.; Generator Operator; Grade-all; Guardrail Machines, i.e. punch, auger, etc.; Hammer Operator (Piledriver); Hoist, stiff leg, guy derrick or similar type, fifty (50) ton and over; Hoist, two (2) drums or more; Hydro Axe (loader mounted or similar type); Jack Operator, Elevating Barges, Barge Operator, self-unloading; Loader Operator, front end and overhead, twenty five thousand (25,000) lbs. and less than sixty thousand (60,000) lbs.; Log Skidders; Piledriver Operator (not crane type); Pipe, Bending, Cleaning, Doping and Wrapping Machines; Rail, Ballast Tamper Multi-Purpose; Rubber-tired Dozers and Pushers; Scraper, all types; Side-Boom; Skip Loader, Drag Box; Strump Grinder (loader mounted or similar type); Surface Heater and Planer; Tractor, rubber-tired, over fifty (50) HP Flywheel; Trenching Machine three foot (3') depth and deeper; Tub Grinder (used for wood debris); Tunnel Boring Machine Mechanic; Tunnel, Mucking Machine; Ultra High Pressure Water Jet Cutting Tool System Operator; Vacuum Blasting Machine Operator; Water pulls, Water wagons

Group 5

Asphalt, Extrusion Machine; Asphalt, Roller (any asphalt mix); Asphalt, Roto-Mill pavement profiler ground man; Bulldozer, twenty thousand (20,000) lbs. or less, or one hundred (100) horse or less; Cement Pump; Chip Spreading Machine; Churn Drill and Earth Boring Machine; Compactor, self-propelled without blade; Compressor, (any power) one thousand two hundred fifty (1,250) cu. ft. and over, total capacity; Concrete, Batch Plant Quality control; Concrete, Combination Mixer and compressor operator, gunite work; Concrete, Curb Machine, Mechanical Berm, Curb and/or Curb and Gutter; Concrete, Finishing Machine; Concrete, Grouting Machine; Concrete, Internal Full Slab Vibrator Operator; Concrete, Joint Machine; Concrete, Mixer single drum, any capacity; Concrete, Paving Machine eight foot (8') or less; Concrete, Planer; Concrete, Pump; Concrete, Pump Truck; Concrete, Pumpcrete Operator (any type); Concrete, Slip Form Pumps, power driven hydraulic lifting device for concrete forms; Conveyored Material Hauler; Crane, Boom Truck under twenty (20) tons; Crane, Boom Type lifting device, five (5) ton capacity or less; Drill, Directional type less than twenty thousand (20,000) lbs. pullback; Fork Lift, over ten (10) ton or Robotic; Helicopter Hoist; Hoist Operator, single drum; Hydraulic Backhoe track type up to and including twenty thousand (20,000) lbs.; Hydraulic Backhoe wheel type (any make); Laser Screed; Loaders, rubber-tired type, less than twenty five thousand (25,000) lbs.; Pavement Grinder and/or Grooving Machine (riding

type); Pipe, cast in place Pipe Laying Machine; Pulva-Mixer or similar types; Pump Operator, more than five (5) pumps (any size); Rail, Ballast Compactor, Regulator, or Tamper machines; Service Oiler (Greaser); Sweeper Self-Propelled; Tractor, Rubber-Tired, fifty (50) HP flywheel and under; Trenching Machine Operator, maximum digging capacity three foot (3') depth; Tunnel, Locomotive, Dinkey; Tunnel, Power Jumbo setting slip forms, etc.

Group 6

Asphalt, Pugmill (any type); Asphalt, Raker; Asphalt, Truck Mounted Asphalt Spreader, with Screed; Auger Oiler; Boatman; Bobcat, skid steed (less than one (1) yard); Broom, self-propelled; Compressor Operator (any power) under 1,250 cu. ft. total capacity; Concrete Curing Machine (riding type); Concrete Saw; Conveyor Operator or Assistant; Crane, Tugger; Crusher Feederman; Crusher Oiler; Deckhand; Drill, Directional Locator; Fork Lift; Grade Checker; Guardrail Punch Oiler; Hydrographic Seeder Machine, straw, pulp or seed; Hydrostatic Pump Operator; Mixer Box (CTB, dry batch, etc.); Oiler; Plant Oiler; Pump (any power); Rail, Brakeman, Switchman, Motorman; Rail, Tamping Machine, mechanical, self-propelled; Rigger; Roller grading (not asphalt); Truck, Crane Oiler-Driver

---

IRON0014-005 07/07/2025

ADAMS, ASOTIN, BENTON, COLUMBIA, DOUGLAS, FERRY, FRANKLIN, GARFIELD, GRANT, LINCOLN, OKANOGAN, PEND ORIELLE, SPOKANE, STEVENS, WALLA WALLA AND WHITMAN COUNTIES

	Rates	Fringes
IRONWORKER	$ 43.40	32.77

IRON0029-002 07/07/2025

CLARK, COWLITZ, KLICKITAT, PACIFIC, SKAMANIA, AND WAHKAIKUM COUNTIES

	Rates	Fringes
IRONWORKER	$ 48.31	34.52

IRON0086-002 07/07/2025

YAKIMA, KITTITAS AND CHELAN COUNTIES

	Rates	Fringes
IRONWORKER	$ 43.40	32.77

IRON0086-004 07/07/2025

CLALLAM, GRAYS HARBOR, ISLAND, JEFFERSON, KING, KITSAP, LEWIS, MASON, PIERCE, SKAGIT, SNOHOMISH, THURSTON, AND WHATCOM COUNTIES

	Rates	Fringes
IRONWORKER	$ 57.94	34.52

LABO0238-004 06/01/2025

A-1 AREA: ASOTIN, BENTON, FRANKLIN, GARFIELD, LINCOLN, SPOKANE, WALLA WALLA, AND WHITMAN COUNTIES
A-2 AREA: ADAMS,COLUMBIA,DOUGLAS (East of 120th Meridian), FERRY, GRANT, OKANOGAN, PEND OREILLE, AND STEVENS COUNTIES

	Rates	Fringes
LABORER (A-1)		
GROUP 1	$ 34.03	16.90
GROUP 2	$ 37.13	16.90
GROUP 3	$ 37.46	16.90
GROUP 4	$ 37.80	16.90
GROUP 5	$ 38.14	16.90
LABORER (A-2)		
GROUP 1	$ 37.03	16.90
GROUP 2	$ 40.13	16.90
GROUP 3	$ 40.46	16.90
GROUP 4	$ 40.80	16.90
GROUP 5	$ 41.14	16.90

LABORERS CLASSIFICATIONS

GROUP 1: Flagman; Landscape Laborer; Scaleman; Traffic Control Maintenance Laborer (to include erection and maintenance of barricades, signs and relief of flagperson); Window Washer/Cleaner (detail cleanup, such as, but not limited to cleaning floors, ceilings, walls, windows, etc. prior to final acceptance by the owner)

GROUP 2: Asbestos Abatement Worker; Brush Hog Feeder; Carpenter Tender; Cement Handler; Clean-up Laborer; Concrete Crewman (to include stripping of forms, hand operating jacks on slip form construction, application of concrete curing compounds, pumpcrete machine, signaling, handling the nozzle of squeezcrete or similar machine,6 inches and smaller); Confined Space Attendant; Concrete Signalman; Crusher Feeder; Demolition (to include clean-up, burning, loading, wrecking and salvage of all material); Dumpman; Fence Erector; Firewatch; Form Cleaning Machine Feeder, Stacker; General Laborer; Grout Machine Header Tender; Guard Rail (to include guard rails, guide and reference posts, sign posts, and right-of-way markers); Hazardous Waste Worker, Level D (no respirator is used and skin protection is minimal); Miner, Class ""A"" (to include all bull gang, concrete crewman, dumpman and pumpcrete crewman, including distributing pipe, assembly & dismantle, and nipper); Nipper; Riprap Man; Sandblast Tailhoseman; Scaffold Erector (wood or steel); Stake Jumper; Structural Mover (to include separating foundation, preparation, cribbing, shoring, jacking and unloading of structures); Tailhoseman (water nozzle); Timber Bucker and Faller (by hand); Track Laborer (RR); Truck Loader; Well-Point Man; All Other Work Classifications Not Specially Listed Shall Be Classified As General Laborer

GROUP 3: Asphalt Roller, walking; Cement Finisher Tender; Concrete Saw, walking; Demolition Torch; Dope Pot Firemen, non-mechanical; Driller Tender (when required to move and position machine); Form Setter, Paving; Grade Checker using level; Hazardous Waste Worker, Level C (uses a chemical ""splash suit"" and air purifying respirator); Jackhammer

Operator; Miner, Class ""B"" (to include brakeman, finisher, vibrator, form setter); Nozzleman (to include squeeze and flo-crete nozzle); Nozzleman, water, air or steam; Pavement Breaker (under 90 lbs.); Pipelayer, corrugated metal culvert; Pipelayer, multi- plate; Pot Tender; Power Buggy Operator; Power Tool Operator, gas, electric, pneumatic; Railroad Equipment, power driven, except dual mobile power spiker or puller; Railroad Power Spiker or Puller, dual mobile; Rodder and Spreader; Tamper (to include operation of Barco, Essex and similar tampers); Trencher, Shawnee; Tugger Operator; Wagon Drills; Water Pipe Liner; Wheelbarrow (power driven)

GROUP 4: Air and Hydraulic Track Drill; Aspahlt Raker;Brush Machine (to include horizontal construction joint cleanup brush machine, power propelled); Caisson Worker, free air; Chain Saw Operator and Faller; Concrete Stack (to include laborers when laborers working on free standing concrete stacks for smoke or fume control above 40 feet high); Gunite (to include operation of machine and nozzle); Hazardous Waste Worker, Level B (uses same respirator protection as Level A. A supplied air line is provided in conjunction with a chemical ""splash suit""); High Scaler; Laser Beam Operator (to include grade checker and elevation control); Miner, Class C (to include miner, nozzleman for concrete, laser beam operator and rigger on tunnels); Monitor Operator (air track or similar mounting); Mortar Mixer; Nozzleman (to include jet blasting nozzleman, over 1,200 lbs., jet blast machine power propelled, sandblast nozzle); Pavement Breaker (90 lbs. and over); Pipelayer (to include working topman, caulker, collarman, jointer, mortarman, rigger, jacker, shorer, valve or meter installer); Pipewrapper; Plasterer Tender; Vibrators (all)

GROUP 5 - Drills with Dual Masts; Hazardous Waste Worker, Level A (utilizes a fully encapsulated suit with a self-contained breathing apparatus or a supplied air line); Miner Class ""D"", (to include raise and shaft miner, laser beam operator on riases and shafts)

LABO0238-006 06/01/2025

COUNTIES EAST OF THE 120TH MERIDIAN: ADAMS, ASOTIN, BENTON, CHELAN, COLUMBIA, DOUGLAS, FERRY, FRANKLIN, GARFIELD, GRANT, LINCOLN, OKANOGAN, PEND OREILLE, STEVENS, SPOKANE, WALLA WALLA, WHITMAN

	Rates	Fringes
Hod Carrier	$ 38.05	16.75

LABO0242-003 06/01/2025

KING COUNTY

	Rates	Fringes
LABORER		
GROUP 1	$ 36.07	15.79
GROUP 2A	$ 40.88	16.72
GROUP 3	$ 50.38	16.96
GROUP 4	$ 51.52	16.99
GROUP 5	$ 52.31	17.01

GROUP 6.....$ 53.99 17.05

BASE POINTS: BELLINGHAM, MT. VERNON, EVERETT, SEATTLE, KENT, TACOMA, OLYMPIA, CENTRALIA, ABERDEEN, SHELTON, PT. TOWNSEND, PT. ANGELES, AND BREMERTON

ZONE 1 - Projects within 25 radius miles of the respective city hall
ZONE 2 - More than 25 but less than 45 radius miles from the respective city hall
ZONE 3 - More than 45 radius miles from the respective city hall

ZONE DIFFERENTIAL (ADD TO ZONE 1 RATES):
ZONE 2 - $1.00
ZONE 3 - $1.30

BASE POINTS: CHELAN, SUNNYSIDE, WENATCHEE, AND YAKIMA

ZONE 1 - Projects within 25 radius miles of the respective city hall
ZONE 2 - More than 25 radius miles from the respective city hall

ZONE DIFFERENTIAL (ADD TO ZONE 1 RATES):
ZONE 2 - $2.25

LABORERS CLASSIFICATIONS

GROUP 1: Landscaping and Planting; Watchman; Window Washer/Cleaner (detail clean-up, such as but not limited to cleaning floors, ceilings, walls, windows, etc., prior to final acceptance by the owner)

GROUP 2A: Batch Weighman; Crusher Feeder; Fence Laborer; Flagman; Pilot Car

GROUP 3: General Laborer; Air, Gas, or Electric Vibrating Screed; Asbestos Abatement Laborer; Ballast Regulator Machine; Brush Cutter; Brush Hog Feeder; Burner; Carpenter Tender; Cement Finisher Tender; Change House or Dry Shack; Chipping Gun (under 30 lbs.); Choker Setter; Chuck Tender; Clean-up Laborer; Concrete Form Stripper; Curing Laborer; Demolition (wrecking and moving including charred material); Ditch Digger; Dump Person; Fine Graders; Firewatch; Form Setter; Gabian Basket Builders; Grout Machine Tender; Grinders; Guardrail Erector; Hazardous Waste Worker (Level C: uses a chemical ""splash suit"" and air purifying respirator); Maintenance Person; Material Yard Person; Pot Tender; Rip Rap Person; Riggers; Scale Person; Sloper Sprayer; Signal Person; Stock Piler; Stake Hopper; Toolroom Man (at job site); Topper-Tailer; Track Laborer; Truck Spotter; Vinyl Seamer

GROUP 4: Cement Dumper-Paving; Chipping Gun (over 30 lbs.); Clary Power Spreader; Concrete Dumper/Chute Operator; Concrete Saw Operator; Drill Operator (hydraulic, diamond, aiartrac); Faller and Bucker Chain Saw; Grade Checker and Transit Person; Groutmen (pressure) including post tension beams; Hazardous Waste Worker (Level B: uses same respirator protection as Level A. A supplied air line is provided in conjunction with a chemical ""splash suit""); High Scaler; Jackhammer; Laserbeam Operator; Manhole Builder-Mudman; Nozzleman (concrete pump, green cutter when using combination of high pressure air and water on

concrete and rock, sandblast, gunite, shotcrete, water blaster, vacuum blaster); Pavement Breaker; Pipe Layer and Caulker; Pipe Pot Tender; Pipe Reliner (not insert type); Pipe Wrapper; Power Jacks; Railroad Spike Puller-Power; Raker-Asphalt; Rivet Buster; Rodder; Sloper (over 20 ft); Spreader (concrete); Tamper and Similar electric, air and glas operated tool; Timber Person-sewer (lagger shorer and cribber); Track Liner Power; Tugger Operator; Vibrator; Well Point Laborer

GROUP 5: Caisson Worker; Mortarman and Hodcarrier; Powderman; Re-Timberman; Hazardous Waste Worker (Level A: utilizes a fully encapsulated suit with a self-contained breathing apparatus or a supplied air line).

Group 6: Miner

LABO0252-010 06/01/2025

CLALLAM, GRAYS HARBOR, JEFFERSON, KITSAP, LEWIS, MASON, PACIFIC (EXCLUDING SOUTHWEST), PIERCE, AND THURSTON COUNTIES

	Rates	Fringes
LABORER		
GROUP 1	$ 36.07	15.79
GROUP 2	$ 40.88	16.72
GROUP 3	$ 50.38	16.96
GROUP 4	$ 51.52	16.99
GROUP 5	$ 52.31	17.01

BASE POINTS: BELLINGHAM, MT. VERNON, EVERETT, SEATTLE, KENT, TACOMA, OLYMPIA, CENTRALIA, ABERDEEN, SHELTON, PT. TOWNSEND, PT. ANGELES, AND BREMERTON

ZONE 1 - Projects within 25 radius miles of the respective city hall
ZONE 2 - More than 25 but less than 45 radius miles from the respective city hall
ZONE 3 - More than 45 radius miles from the respective city hall

ZONE DIFFERENTIAL (ADD TO ZONE 1 RATES):
ZONE 2 - $1.00
ZONE 3 - $1.30

BASE POINTS: CHELAN, SUNNYSIDE, WENATCHEE, AND YAKIMA

ZONE 1 - Projects within 25 radius miles of the respective city hall
ZONE 2 - More than 25 radius miles from the respective city hall

ZONE DIFFERENTIAL (ADD TO ZONE 1 RATES):
ZONE 2 - $2.25

LABORERS CLASSIFICATIONS

GROUP 1: Landscaping and Planting; Watchman; Window Washer/Cleaner (detail clean-up, such as but not limited to cleaning floors, ceilings, walls, windows, etc., prior to final acceptance by the owner)

GROUP 2: Batch Weighman; Crusher Feeder; Fence Laborer; Flagman; Pilot Car

GROUP 3: General Laborer; Air, Gas, or Electric Vibrating Screed; Asbestos Abatement Laborer; Ballast Regulator Machine; Brush Cutter; Brush Hog Feeder; Burner; Carpenter Tender; Cement Finisher Tender; Change House or Dry Shack; Chipping Gun (under 30 lbs.); Choker Setter; Chuck Tender; Clean-up Laborer; Concrete Form Stripper; Curing Laborer; Demolition (wrecking and moving including charred material); Ditch Digger; Dump Person; Fine Graders; Firewatch; Form Setter; Gabian Basket Builders; Grout Machine Tender; Grinders; Guardrail Erector; Hazardous Waste Worker (Level C: uses a chemical ""splash suit"" and air purifying respirator); Maintenance Person; Material Yard Person; Pot Tender; Rip Rap Person; Riggers; Scale Person; Sloper Sprayer; Signal Person; Stock Piler; Stake Hopper; Toolroom Man (at job site); Topper-Tailer; Track Laborer; Truck Spotter; Vinyl Seamer

GROUP 4: Cement Dumper-Paving; Chipping Gun (over 30 lbs.); Clary Power Spreader; Concrete Dumper/Chute Operator; Concrete Saw Operator; Drill Operator (hydraulic, diamond, aiartrac); Faller and Bucker Chain Saw; Groutmen (pressure) including post tension beams; Hazardous Waste Worker (Level B: uses same respirator protection as Level A. A supplied air line is provided in conjunction with a chemical ""splash suit""); Jackhammer; Laserbeam Operator; Manhole Builder-Mudman; Nozzleman (concrete pump, green cutter when using combination of high pressure air and water on concrete and rock, sandblast, gunite, shotcrete, water blaster, vacuum blaster); Pavement Breaker; Pipe Layer and Caulker; Pipe Pot Tender; Pipe Reliner (not insert type); Pipe Wrapper; Power Jacks; Railroad Spike Puller-Power; Raker-Asphalt; Rivet Buster; Rodder; Sloper (over 20 ft); Spreader (concrete); Tamper and Similar electric, air and glas operated tool; Timber Person-sewer (lagger shorer and cribber); Track Liner Power; Tugger Operator; Vibrator; Well Point Laborer

GROUP 5: Caisson Worker; Miner; Mortarman and Hodcarrier; Grade Checker and Transit Person; High Scaler; Powderman; Re-Timberman; Hazardous Waste Worker (Level A: utilizes a fully encapsulated suit with a self-contained breathing apparatus or a supplied air line).

LABO0292-008 06/01/2025

ISLAND, SAN JUAN, SKAGIT, SNOHOMISH, AND WHATCOM COUNTIES

	Rates	Fringes
LABORER		
GROUP 1	$ 36.07	15.79
GROUP 2	$ 40.88	16.72
GROUP 3	$ 50.38	16.96
GROUP 4	$ 51.52	16.99
GROUP 5	$ 52.31	17.01

BASE POINTS: BELLINGHAM, MT. VERNON, EVERETT, SEATTLE, KENT, TACOMA, OLYMPIA, CENTRALIA, ABERDEEN, SHELTON, PT. TOWNSEND, PT. ANGELES, AND BREMERTON

ZONE 1 - Projects within 25 radius miles of the respective

city hall
ZONE 2 - More than 25 but less than 45 radius miles from the respective city hall
ZONE 3 - More than 45 radius miles from the respective city hall

ZONE DIFFERENTIAL (ADD TO ZONE 1 RATES):
ZONE 2 - $1.00
ZONE 3 - $1.30

BASE POINTS: CHELAN, SUNNYSIDE, WENATCHEE, AND YAKIMA

ZONE 1 - Projects within 25 radius miles of the respective city hall
ZONE 2 - More than 25 radius miles from the respective city hall

ZONE DIFFERENTIAL (ADD TO ZONE 1 RATES):
ZONE 2 - $2.25

LABORERS CLASSIFICATIONS

GROUP 1: Landscaping and Planting; Watchman; Window Washer/Cleaner (detail clean-up, such as but not limited to cleaning floors, ceilings, walls, windows, etc., prior to final acceptance by the owner)

GROUP 2: Batch Weighman; Crusher Feeder; Fence Laborer; Flagman; Pilot Car

GROUP 3: General Laborer; Air, Gas, or Electric Vibrating Screed; Asbestos Abatement Laborer; Ballast Regulator Machine; Brush Cutter; Brush Hog Feeder; Burner; Carpenter Tender; Cement Finisher Tender; Change House or Dry Shack; Chipping Gun (under 30 lbs.); Choker Setter; Chuck Tender; Clean-up Laborer; Concrete Form Stripper; Curing Laborer; Demolition (wrecking and moving including charred material); Ditch Digger; Dump Person; Fine Graders; Firewatch; Form Setter; Gabian Basket Builders; Grout Machine Tender; Grinders; Guardrail Erector; Hazardous Waste Worker (Level C: uses a chemical ""splash suit"" and air purifying respirator); Maintenance Person; Material Yard Person; Pot Tender; Rip Rap Person; Riggers; Scale Person; Sloper Sprayer; Signal Person; Stock Piler; Stake Hopper; Toolroom Man (at job site); Topper-Tailer; Track Laborer; Truck Spotter; Vinyl Seamer

GROUP 4: Cement Dumper-Paving; Chipping Gun (over 30 lbs.); Clary Power Spreader; Concrete Dumper/Chute Operator; Concrete Saw Operator; Drill Operator (hydraulic, diamond, aiartrac); Faller and Bucker Chain Saw; Grade Checker and Transit Person; Groutmen (pressure) including post tension beams; Hazardous Waste Worker (Level B: uses same respirator protection as Level A. A supplied air line is provided in conjunction with a chemical ""splash suit""); High Scaler; Jackhammer; Laserbeam Operator; Manhole Builder-Mudman; Nozzleman (concrete pump, green cutter when using combination of high pressure air and water on concrete and rock, sandblast, gunite, shotcrete, water blaster, vacuum blaster); Pavement Breaker; Pipe Layer and Caulker; Pipe Pot Tender; Pipe Reliner (not insert type); Pipe Wrapper; Power Jacks; Railroad Spike Puller-Power; Raker-Asphalt; Rivet Buster; Rodder; Sloper (over 20 ft); Spreader (concrete); Tamper and Similar electric, air and glas operated tool; Timber Person-sewer (lagger shorer and

cribber); Track Liner Power; Tugger Operator; Vibrator; Well Point Laborer

GROUP 5: Caisson Worker; Miner; Mortarman and Hodcarrier; Powderman; Re-Timberman; Hazardous Waste Worker (Level A: utilizes a fully encapsulated suit with a self-contained breathing apparatus or a supplied air line).

LABO0335-022 06/01/2025

CLARK, COWLITZ, KLICKITAT, PACIFIC (SOUTH OF A STRAIGHT LINE MADE BY EXTENDING THE NORTH BOUNDARY LINE OF WAHKIAKUM COUNTY WEST TO THE PACIFIC OCEAN), SKAMANIA AND WAHKIAKUM COUNTIES

	Rates	Fringes
Laborers:		
GROUP 1	$ 32.67	15.60
GROUP 2	$ 40.56	15.60
GROUP 3	$ 44.06	15.60
GROUP 4	$ 44.90	15.60
GROUP 5	$ 45.54	15.60
GROUP 6	$ 46.08	15.60

LABORERS CLASSIFICATIONS

GROUP 1: Landscaping, and/or Planting Laborers

GROUP 2: Fence Builders and Traffic Flaggers

GROUP 3: Asphalt Plant Laborers; Asphalt Spreaders; Batch Weighman; Broomers; Brush Burners and Cutters; Car and Truck Loaders; Carpenter Tender; Change-House Man or Dry Shack Man; Choker Setter; Clean-up Laborers; Curing, Concrete; Demolition, Wrecking and Moving Laborers; Dumpers, road oiling crew; Dumpmen (for grading crew); Elevator Feeders; Median Rail Reference Post, Guide Post, Right of Way Marker; Fine Graders; Fire Watch; Form Strippers (not swinging stages); General Laborers; Hazardous Waste Worker; Hod Carrier; Leverman or Aggregate Spreader (Flaherty and similar types); Loading Spotters; Material Yard Man (including electrical); Pittsburgh Chipper Operator or Similar Types; Railroad Track Laborers; Ribbon Setters (including steel forms); Rip Rap Man (hand placed); Road Pump Tender; Sewer Labor; Signalman; Skipman; Slopers; Spraymen; Stake Chaser; Stockpiler; Tie Back Shoring; Timber Faller and Bucker (hand labor); Toolroom Man (at job site); Tunnel Bullgang (above ground); Weight-Man- Crusher (aggregate when used)

GROUP 4: Applicator (including pot power tender for same), applying protective material by hand or nozzle on utility lines or storage tanks on project; Brush Cutters (power saw); Burners; Choker Splicer; Clary Power Spreader and similar types; Clean- up Nozzleman-Green Cutter (concrete, rock, etc.); Concrete Power Buggyman; Concrete Laborer; Crusher Feeder; Demolition and Wrecking Charred Materials; Gunite Nozzleman Tender; Gunite or Sand Blasting Pot Tender; Handlers or Mixers of all Materials of an irritating nature (including cement and lime); Tool Operators (includes but not limited to: Dry Pack Machine; Jackhammer; Chipping Guns; Paving Breakers); Pipe Doping and Wrapping; Post Hole Digger, air, gas or electric;

Vibrating Screed; Tampers; Sand Blasting (Wet); Stake-Setter; Tunnel-Muckers, Brakemen, Concrete Crew, Bullgang (underground)

GROUP 5: Asbestos Removal; Bit Grinder; Drill Doctor; Drill Operators, air tracks, cat drills, wagon drills, rubber-mounted drills, and other similar types including at crusher plants; Gunite Nozzleman; High Scalers, Strippers and Drillers (covers work in swinging stages, chairs or belts, under extreme conditions unusual to normal drilling, blasting, barring-down, or sloping and stripping); Manhole Builder; Powdermen; Concrete Saw Operator; Pwdermen; Power Saw Operators (Bucking and Falling); Pumpcrete Nozzlemen; Sand Blasting (Dry); Sewer Timberman; Track Liners, Anchor Machines, Ballast Regulators, Multiple Tampers, Power Jacks, Tugger Operator; Tunnel-Chuck Tenders, Nippers and Timbermen; Vibrator; Water Blaster

GROUP 6: Asphalt Raker; Concrete Saw Operator (walls); Concrete Nozzelman; Grade Checker; Pipelayer; Laser Beam (pipelaying)-applicable when employee assigned to move, set up, align; Laser Beam; Tunnel Miners; Motorman-Dinky Locomotive-Tunnel; Powderman-Tunnel; Shield Operator-Tunnel

---

LABO0348-003 06/01/2025

CHELAN, DOUGLAS (W OF 12TH MERIDIAN), KITTITAS, AND YAKIMA COUNTIES

	Rates	Fringes
LABORER		
GROUP 1	$ 31.19	16.48
GROUP 2	$ 35.34	16.59
GROUP 3	$ 38.40	16.66
GROUP 4	$ 39.26	16.68
GROUP 5	$ 39.89	16.70

BASE POINTS: BELLINGHAM, MT. VERNON, EVERETT, SEATTLE, KENT, TACOMA, OLYMPIA, CENTRALIA, ABERDEEN, SHELTON, PT. TOWNSEND, PT. ANGELES, AND BREMERTON

ZONE 1 - Projects within 25 radius miles of the respective city hall
ZONE 2 - More than 25 but less than 45 radius miles from the respective city hall
ZONE 3 - More than 45 radius miles from the respective city hall

ZONE DIFFERENTIAL (ADD TO ZONE 1 RATES):
ZONE 2 - $1.00
ZONE 3 - $1.30

BASE POINTS: CHELAN, SUNNYSIDE, WENATCHEE, AND YAKIMA

ZONE 1 - Projects within 25 radius miles of the respective city hall
ZONE 2 - More than 25 radius miles from the respective city hall

ZONE DIFFERENTIAL (ADD TO ZONE 1 RATES):
ZONE 2 - $2.25

LABORERS CLASSIFICATIONS

GROUP 1: Landscaping and Planting; Watchman; Window Washer/Cleaner (detail clean-up, such as but not limited to cleaning floors, ceilings, walls, windows, etc., prior to final acceptance by the owner)

GROUP 2: Batch Weighman; Crusher Feeder; Fence Laborer; Flagman; Pilot Car

GROUP 3: General Laborer; Air, Gas, or Electric Vibrating Screed; Asbestos Abatement Laborer; Ballast Regulator Machine; Brush Cutter; Brush Hog Feeder; Burner; Carpenter Tender; Cement Finisher Tender; Change House or Dry Shack; Chipping Gun (under 30 lbs.); Choker Setter; Chuck Tender; Clean-up Laborer; Concrete Form Stripper; Curing Laborer; Demolition (wrecking and moving including charred material); Ditch Digger; Dump Person; Fine Graders; Firewatch; Form Setter; Gabian Basket Builders; Grout Machine Tender; Grinders; Guardrail Erector; Hazardous Waste Worker (Level C: uses a chemical ""splash suit"" and air purifying respirator); Maintenance Person; Material Yard Person; Pot Tender; Rip Rap Person; Riggers; Scale Person; Sloper Sprayer; Signal Person; Stock Piler; Stake Hopper; Toolroom Man (at job site); Topper-Tailer; Track Laborer; Truck Spotter; Vinyl Seamer

GROUP 4: Cement Dumper-Paving; Chipping Gun (over 30 lbs.); Clary Power Spreader; Concrete Dumper/Chute Operator; Concrete Saw Operator; Drill Operator (hydraulic, diamond, aiartrac); Faller and Bucker Chain Saw; Grade Checker and Transit Person; Groutmen (pressure) including post tension beams; Hazardous Waste Worker (Level B: uses same respirator protection as Level A. A supplied air line is provided in conjunction with a chemical ""splash suit""); High Scaler; Jackhammer; Laserbeam Operator; Manhole Builder-Mudman; Nozzleman (concrete pump, green cutter when using combination of high pressure air and water on concrete and rock, sandblast, gunite, shotcrete, water blaster, vacuum blaster); Pavement Breaker; Pipe Layer and Caulker; Pipe Pot Tender; Pipe Reliner (not insert type); Pipe Wrapper; Power Jacks; Railroad Spike Puller-Power; Raker-Asphalt; Rivet Buster; Rodder; Sloper (over 20 ft); Spreader (concrete); Tamper and Similar electric, air and glas operated tool; Timber Person-sewer (lagger shorer and cribber); Track Liner Power; Tugger Operator; Vibrator; Well Point Laborer

GROUP 5: Caisson Worker; Miner; Mortarman and Hodcarrier; Powderman; Re-Timberman; Hazardous Waste Worker (Level A: utilizes a fully encapsulated suit with a self-contained breathing apparatus or a supplied air line).

PAIN0005-002 07/01/2025

STATEWIDE EXCEPT CLARK, COWLITZ, KLICKITAT, PACIFIC, SKAMANIA, AND WAHKIAKUM COUNTIES

	Rates	Fringes
Painters:		
STRIPERS	$ 41.80	20.85

PAIN0010-012 07/01/2025

CLARK, COWLITZ, KLICKITAT, PACIFIC, SKAMANIA, AND WAHKIAKUM COUNTIES

	Rates	Fringes
PAINTER (Brush, Roller, Spray & Sandblasting)	$ 39.94	16.68

PAIN0010-013 07/01/2025

CLARK, COWLITZ, KLICKITAT, PACIFIC, SKAMANIA and WAHKIAKUM COUNTIES

	Rates	Fringes
Painters:		
HIGHWAY & PARKING LOT STRIPER	$ 41.19	17.09

PAIN0300-007 07/01/2025

CLALLAM, GRAYS HARBOR, ISLAND, JEFFERSON, KING, KITSAP, LEWIS, MASON, PIERCE, SAN JUAN, SKAGIT, SNOHOMISH, THURSTON, AND WHATCOM COUNTIES

	Rates	Fringes
PAINTER	$ 41.24	14.70

PAIN0427-005 07/01/2025

ADAMS, ASOTIN; BENTON AND FRANKLIN (EXCEPT HANFORD SITE); CHELAN, COLUMBIA, DOUGLAS, FERRY, GARFIELD, GRANT, KITTITAS, LINCOLN, OKANOGAN, PEND OREILLE, SPOKANE, STEVENS, WALLA WALLA, WHITMAN, AND YAKIMA COUNTIES

	Rates	Fringes
PAINTER (Application of Cold Tar Products, Epoxies, Polyurethanes, Acids, Radiation Resistant Material, Water, Sandblasting, Over 30'/Swing Stage Work, Brush, Roller, Striping, Steam-cleaning, and Spray)	$ 36.26	17.01

PLAS0072-004 06/01/2025

ADAMS, ASOTIN, BENTON, CHELAN, COLUMBIA, DOUGLAS, FERRY, FRANKLIN, GARFIELD, GRANT, KITTITAS, LINCOLN, OKANOGAN, PEND OREILLE, SPOKANE, STEVENS, WALLA WALLA, WHITMAN, AND YAKIMA COUNTIES

	Rates	Fringes
CEMENT MASON/CONCRETE FINISHER		
ZONE 1	$ 40.89	18.64

Zone Differential (Add to Zone 1 rate): Zone 2 - $3.00

BASE POINTS: Spokane, Pasco, Lewiston; Wenatchee
Zone 1: 0 - 45 radius miles from the main post office
Zone 2: Over 45 radius miles from the main post office

PLAS0528-001 06/01/2024

CLALLAM, COWLITZ, GRAYS HARBOR, ISLAND, JEFFERSON, KING, KITSAP, LEWIS, MASON, PACIFIC, PIERCE, SAN JUAN, SKAGIT, SNOHOMISH, THURSTON, WAHKIAKUM AND WHATCOM COUNTIES

	Rates	Fringes
CEMENT MASON		
CEMENT MASON	$ 54.16	21.27
COMPOSITION, TROWEL MACHINE, GRINDER, POWER TOOLS, GUNNITE NOZZLE	$ 54.66	21.27
TROWELING MACHINE OPERATOR ON COMPOSITION	$ 54.66	21.27

PLAS0555-002 06/01/2025

CLARK, KLICKITAT AND SKAMANIA COUNTIES

ZONE 1:

	Rates	Fringes
CEMENT MASON		
CEMENT MASONS DOING BOTH COMPOSITION/POWER MACHINERY AND SUSPENDED/HANGING SCAFFOLD	$ 48.05	20.31
CEMENT MASONS ON SUSPENDED, SWINGING AND/OR HANGING SCAFFOLD	$ 47.09	20.31
CEMENT MASONS	$ 46.13	20.31
COMPOSITION WORKERS AND POWER MACHINERY OPERATORS	$ 47.09	20.31

Zone Differential (Add To Zone 1 Rates):
Zone 2 - $0.65
Zone 3 - 1.15
Zone 4 - 1.70
Zone 5 - 3.00

BASE POINTS: BEND, CORVALLIS, EUGENE, MEDFORD, PORTLAND, SALEM, THE DALLES, VANCOUVER

ZONE 1: Projects within 30 miles of the respective city hall
ZONE 2: More than 30 miles but less than 40 miles from the respective city hall.
ZONE 3: More than 40 miles but less than 50 miles from the respective city hall.
ZONE 4: More than 50 miles but less than 80 miles from the respective city hall.
ZONE 5: More than 80 miles from the respective city hall

TEAM0037-002 06/01/2024

CLARK, COWLITZ, KLICKITAT, PACIFIC (South of a straight line made by extending the north boundary line of Wahkiakum County west to the Pacific Ocean), SKAMANIA, AND WAHKIAKUM COUNTIES

	Rates	Fringes
Truck drivers:		
ZONE 1		
GROUP 1	$ 33.09	17.63
GROUP 2	$ 33.24	17.63
GROUP 3	$ 33.40	17.63
GROUP 4	$ 33.72	17.63
GROUP 5	$ 33.97	17.63
GROUP 6	$ 34.18	17.63
GROUP 7	$ 34.42	17.63

Zone Differential (Add to Zone 1 Rates):
Zone 2 - $0.65
Zone 3 - 1.15
Zone 4 - 1.70
Zone 5 - 2.75

BASE POINTS: ASTORIA, THE DALLES, LONGVIEW AND VANCOUVER

ZONE 1: Projects within 30 miles of the respective city hall.

ZONE 2: More than 30 miles but less than 40 miles from the respective city hall.

ZONE 3: More than 40 miles but less than 50 miles from the respective city hall.

ZONE 4: More than 50 miles but less than 80 miles from the respective city hall.

ZONE 5: More than 80 miles from the respective city hall.

TRUCK DRIVERS CLASSIFICATIONS

GROUP 1: A Frame or Hydra lifrt truck w/load bearing surface; Articulated Dump Truck; Battery Rebuilders; Bus or Manhaul Driver; Concrete Buggies (power operated); Concrete Pump Truck; Dump Trucks, side, end and bottom dumps, including Semi Trucks and Trains or combinations there of: up to and including 10 cu. yds.; Lift Jitneys, Fork Lifts (all sizes in loading, unloading and transporting material on job site); Loader and/or Leverman on Concrete Dry Batch Plant (manually operated); Pilot Car; Pickup Truck; Solo Flat Bed and misc. Body Trucks, 0-10 tons; Truck Tender; Truck Mechanic Tender; Water Wagons (rated capacity) up to 3,000 gallons; Transit Mix and Wet or Dry Mix - 5 cu. yds. and under; Lubrication Man, Fuel Truck Driver, Tireman, Wash Rack, Steam Cleaner or combinations; Team Driver; Slurry Truck Driver or Leverman; Tireman

GROUP 2: Boom Truck/Hydra-lift or Retracting Crane; Challenger; Dumpsters or similar equipment all sizes; Dump Trucks/Articulated Dumps 6 cu to 10 cu.; Flaherty Spreader Driver or Leverman; Lowbed Equipment, Flat Bed Semi-trailer or doubles transporting equipment or wet or dry materials; Lumber Carrier, Driver-Straddle Carrier (used in loading, unloading and transporting of materials on job site); Oil

Distributor Driver or Leverman; Transit mix and wet or dry mix trcuks: over 5 cu. yds. and including 7 cu. yds.; Vacuum Trucks; Water truck/Wagons (rated capacity) over 3,000 to 5,000 gallons

GROUP 3: Ammonia Nitrate Distributor Driver; Dump trucks, side, end and bottom dumps, including Semi Trucks and Trains or combinations thereof: over 10 cu. yds. and including 30 cu. yds. includes Articulated Dump Trucks; Self-Propelled Street Sweeper; Transit mix and wet or dry mix truck: over 7 cu yds. and including 11 cu yds.; Truck Mechanic-Welder-Body Repairman; Utility and Clean-up Truck; Water Wagons (rated capacity) over 5,000 to 10,000 gallons

GROUP 4: Asphalt Burner; Dump Trucks, side, end and bottom cumps, including Semi-Trucks and Trains or combinations thereof: over 30 cu. yds. and including 50 cu. yds. includes Articulated Dump Trucks; Fire Guard; Transit Mix and Wet or Dry Mix Trucks, over 11 cu. yds. and including 15 cu. yds.; Water Wagon (rated capacity) over 10,000 gallons to 15,000 gallons

GROUP 5: Composite Crewman; Dump Trucks, side, end and bottom dumps, including Semi Trucks and Trains or combinations thereof: over 50 cu. yds. and including 60 cu. yds. includes Articulated Dump Trucks

GROUP 6: Bulk Cement Spreader w/o Auger; Dry Pre-Batch concrete Mix Trucks; Dump trucks, side, end and bottom dumps, including Semi Trucks and Trains of combinations thereof: over 60 cu. yds. and including 80 cu. yds., and includes Articulated Dump Trucks; Skid Truck

GROUP 7: Dump Trucks, side, end and bottom dumps, including Semi Trucks and Trains or combinations thereof: over 80 cu. yds. and including 100 cu. yds., includes Articulated Dump Trucks; Industrial Lift Truck (mechanical tailgate)

---

* TEAM0174-001 06/01/2025

CLALLAM, GRAYS HARBOR, ISLAND, JEFFERSON, KING, KITSAP, LEWIS, MASON, PACIFIC (North of a straight line made by extending the north boundary line of Wahkiakum County west to the Pacific Ocean), PIERCE, SAN JUAN, SKAGIT, SNOHOMISH, THURSTON AND WHATCOM COUNTIES

	Rates	Fringes
Truck drivers:		
ZONE A:		
GROUP 1:	$ 55.43	27.52
GROUP 2:	$ 54.59	27.52
GROUP 3:	$ 51.78	27.52
GROUP 4:	$ 46.81	27.52
GROUP 5:	$ 54.98	27.52

ZONE B (25-45 miles from center of listed cities*): Add $.70 per hour to Zone A rates.
ZONE C (over 45 miles from centr of listed cities*): Add $1.00 per hour to Zone A rates.

*Zone pay will be calculated from the city center of the following listed cities:

BELLINGHAM	CENTRALIA	RAYMOND	OLYMPIA
EVERETT	SHELTON	ANACORTES	BELLEVUE
SEATTLE	PORT ANGELES	MT. VERNON	KENT
TACOMA	PORT TOWNSEND	ABERDEEN	BREMERTON

TRUCK DRIVERS CLASSIFICATIONS

GROUP 1 - ""A-frame or Hydralift"" trucks and Boom trucks or similar equipment when ""A"" frame or ""Hydralift"" and Boom truck or similar equipment is used; Buggymobile; Bulk Cement Tanker; Dumpsters and similar equipment, Tournorockers, Tournowagon, Tournotrailer, Cat DW series, Terra Cobra, Le Tourneau, Westinghouse, Athye Wagon, Euclid Two and Four-Wheeled power tractor with trailer and similar top-loaded equipment transporting material: Dump Trucks, side, end and bottom dump, including semi-trucks and trains or combinations thereof with 16 yards to 30 yards capacity: Over 30 yards $.15 per hour additional for each 10 yard increment; Explosive Truck (field mix) and similar equipment; Hyster Operators (handling bulk loose aggregates); Lowbed and Heavy Duty Trailer; Road Oil Distributor Driver; Spreader, Flaherty Transit mix used exclusively in heavy construction; Water Wagon and Tank Truck-3,000 gallons and over capacity

GROUP 2 - Bulllifts, or similar equipment used in loading or unloading trucks, transporting materials on job site; Dumpsters, and similar equipment, Tournorockers, Tournowagon, Turnotrailer, Cat. D.W. Series, Terra Cobra, Le Tourneau, Westinghouse, Athye wagon, Euclid two and four-wheeled power tractor with trailer and similar top-loaded equipment transporting material: Dump trucks, side, end and bottom dump, including semi-trucks and trains or combinations thereof with less than 16 yards capacity; Flatbed (Dual Rear Axle); Grease Truck, Fuel Truck, Greaser, Battery Service Man and/or Tire Service Man; Leverman and loader at bunkers and batch plants; Oil tank transport; Scissor truck; Slurry Truck; Sno-Go and similar equipment; Swampers; Straddler Carrier (Ross, Hyster) and similar equipment; Team Driver; Tractor (small, rubber-tired)(when used within Teamster jurisdiction); Vacuum truck; Water Wagon and Tank trucks-less than 3,000 gallons capacity; Winch Truck; Wrecker, Tow truck and similar equipment

GROUP 3 - Flatbed (single rear axle); Pickup Sweeper; Pickup Truck. (Adjust Group 3 upward by $2.00 per hour for onsite work only)

GROUP 4 - Escort or Pilot Car

GROUP 5 - Mechanic

HAZMAT PROJECTS

Anyone working on a HAZMAT job, where HAZMAT certification is required, shall be compensated as a premium, in addition to the classification working in as follows:
LEVEL C: +$.25 per hour - This level uses an air purifying respirator or additional protective clothing.
LEVEL B: +$.50 per hour - Uses same respirator protection as Level A. Supplied air line is provided in conjunction with a chemical ""splash suit.""
LEVEL A: +$.75 per hour - This level utilizes a fully-

encapsulated suit with a self-contained breathing apparatus or a supplied air line.

TEAM0690-004 06/01/2024

ADAMS, ASOTIN, BENTON, CHELAN, COLUMBIA, DOUGLAS, FERRY, FRANKLIN, GARFIELD, GRANT KITTITAS, LINCOLN, OKANOGAN, PEND OREILLE, SPOKANE, STEVENS, WALLA WALLA, WHITMAN AND YAKIMA COUNTIES

	Rates	Fringes
Truck drivers: (AREA 1: SPOKANE ZONE CENTER: Adams, Chelan, Douglas, Ferry, Grant, Kittitas, Lincoln, Okanogan, Pen Oreille, Spokane, Stevens, and Whitman Counties		
AREA 1: LEWISTON ZONE CENTER: Asotin, Columbia, and Garfield Counties		
AREA 2: PASCO ZONE CENTER: Benton, Franklin, Walla Walla and Yakima Counties)		
AREA 1:		
GROUP 1	$ 36.83	20.93
GROUP 2	$ 39.47	20.93
GROUP 3	$ 39.58	20.93
GROUP 4	$ 39.91	20.93
GROUP 5	$ 40.02	20.93
GROUP 6	$ 40.22	20.93
GROUP 7	$ 40.56	20.93
GROUP 8	$ 40.88	20.93
AREA 2:		
GROUP 1	$ 33.83	20.93
GROUP 2	$ 36.47	20.93
GROUP 3	$ 36.58	20.93
GROUP 4	$ 36.91	20.93
GROUP 5	$ 37.02	20.93
GROUP 6	$ 37.22	20.93
GROUP 7	$ 37.56	20.93
GROUP 8	$ 37.88	20.93

Zone Differential (Add to Zone 1 rate: Zone 1 + $2.00)

BASE POINTS: Spokane, Pasco, Lewiston
Zone 1: 0-45 radius miles from the main post office.
Zone 2: Outside 45 radius miles from the main post office

TRUCK DRIVERS CLASSIFICATIONS

GROUP 1: Escort Driver or Pilot Car; Employee Haul; Power Boat Hauling Employees or Material

GROUP 2: Fish Truck; Flat Bed Truck; Fork Lift (3000 lbs. and under); Leverperson (loading trucks at bunkers); Trailer Mounted Hydro Seeder and Mulcher; Seeder & Mulcher; Stationary Fuel Operator; Tractor (small, rubber-tired, pulling trailer or similar equipment)

GROUP 3: Auto Crane (2000 lbs. capacity); Buggy Mobile & Similar; Bulk Cement Tanks & Spreader; Dumptor (6 yds. & under); Flat Bed Truck with Hydraullic System; Fork Lift (3001-16,000 lbs.); Fuel Truck Driver, Steamcleaner & Washer; Power Operated Sweeper; Rubber-tired Tunnel Jumbo; Scissors Truck; Slurry Truck Driver; Straddle Carrier (Ross, Hyster, & similar); Tireperson; Transit Mixers & Truck Hauling Concrete (3 yd. to & including 6 yds.); Trucks, side, end, bottom & articulated end dump (3 yards to and including 6 yds.); Warehouseperson (to include shipping & receiving); Wrecker & Tow Truck

GROUP 4: A-Frame; Burner, Cutter, & Welder; Service Greaser; Trucks, side, end, bottom & articulated end dump (over 6 yards to and including 12 yds.); Truck Mounted Hydro Seeder; Warehouseperson; Water Tank truck (0-8,000 gallons)

GROUP 5: Dumptor (over 6 yds.); Lowboy (50 tons & under); Self- loading Roll Off; Semi-Truck & Trailer; Tractor with Steer Trailer; Transit Mixers and Trucks Hauling Concrete (over 6 yds. to and including 10 yds.); Trucks, side, end, bottom and end dump (over 12 yds. to & including 20 yds.); Truck-Mounted Crane (with load bearing surface either mounted or pulled, up to 14 ton); Vacuum Truck (super sucker, guzzler, etc.)

GROUP 6: Flaherty Spreader Box Driver; Flowboys; Fork Lift (over 16,000 lbs.); Dumps (Semi-end); Mechanic (Field); Semi- end Dumps; Transfer Truck & Trailer; Transit Mixers & Trucks Hauling Concrete (over 10 yds. to & including 20 yds.); Trucks, side, end, bottom and articulated end dump (over 20 yds. to & including 40 yds.); Truck and Pup; Tournarocker, DWs & similar with 2 or more 4 wheel-power tractor with trailer, gallonage or yardage scale, whichever is greater Water Tank Truck (8,001- 14,000 gallons); Lowboy(over 50 tons)

GROUP 7: Oil Distributor Driver; Stringer Truck (cable oeprated trailer); Transit Mixers & Trucks Hauling Concrete (over 20 yds.); Truck, side, end, bottom end dump (over 40 yds. to & including 100 yds.); Truck Mounted Crane (with load bearing surface either mounted or pulled (16 through 25 tons);

GROUP 8: Prime Movers and Stinger Truck; Trucks, side, end, bottom and articulated end dump (over 100 yds.); Helicopter Pilot Hauling Employees or Materials

Footnote A - Anyone working on a HAZMAT job, where HAZMAT certification is required, shall be compensated as a premium, in additon to the classification working in as follows:

LEVEL C-D: - $.50 PER HOUR (This is the lowest level of protection. This level may use an air purifying respirator or additional protective clothing.

LEVEL A-B: - $1.00 PER HOUR (Uses supplied air is conjunction with a chemical spash suit or fully encapsulated suit with a self-contained breathing apparatus.

Employees shall be paid Hazmat pay in increments of four(4) and eight(8) hours.

NOTE:
Trucks Pulling Equipment Trailers: shall receive $.15/hour over applicable truck rate

---

WELDERS - Receive rate prescribed for craft performing operation to which welding is incidental.

==========

Note: Executive Order (EO) 13706, Establishing Paid Sick Leave for Federal Contractors applies to all contracts subject to the Davis-Bacon Act for which the contract is awarded (and any solicitation was issued) on or after January 1, 2017. If this contract is covered by the EO, the contractor must provide employees with 1 hour of paid sick leave for every 30 hours they work, up to 56 hours of paid sick leave each year. Employees must be permitted to use paid sick leave for their own illness, injury or other health-related needs, including preventive care; to assist a family member (or person who is like family to the employee) who is ill, injured, or has other health-related needs, including preventive care; or for reasons resulting from, or to assist a family member (or person who is like family to the employee) who is a victim of, domestic violence, sexual assault, or stalking. Additional information on contractor requirements and worker protections under the EO is available at https://www.dol.gov/agencies/whd/government-contracts.

Note: Executive Order 13658 generally applies to contracts subject to the Davis-Bacon Act that were awarded on or between January 1, 2015 and January 29, 2022, and that have not been renewed or extended on or after January 30, 2022. Executive Order 13658 does not apply to contracts subject only to the Davis-Bacon Related Acts regardless of when they were awarded. If a contract is subject to Executive Order 13658, the contractor must pay all covered workers at least $13.30 per hour (or the applicable wage rate listed on this wage determination, if it is higher) for all hours spent performing on the contract in 2025. The applicable Executive Order minimum wage rate will be adjusted annually. Additional information on contractor requirements and worker protections under Executive Order 13658 is available at www.dol.gov/whd/govcontracts.

Unlisted classifications needed for work not included within the scope of the classifications listed may be added after award only as provided in the labor standards contract clauses (29CFR 5.5 (a) (1) (iii)).

The body of each wage determination lists the classifications and wage rates that have been found to be prevailing for the type(s) of construction and geographic area covered by the wage determination. The classifications are listed in alphabetical order under rate identifiers indicating whether the particular rate is a union rate (current union negotiated rate), a survey rate, a weighted union average rate, a state adopted rate, or a supplemental classification rate.

Union Rate Identifiers

A four-letter identifier beginning with characters other than ""SU"", ""UAVG"", ?SA?, or ?SC? denotes that a union rate was prevailing for that classification in the survey. Example: PLUM0198-005 07/01/2024. PLUM is an identifier of the union whose collectively bargained rate prevailed in the survey for this classification, which in this example would be Plumbers. 0198 indicates the local union number or district council number where applicable, i.e., Plumbers Local 0198. The next number, 005 in the example, is an internal number used in processing the wage determination. The date, 07/01/2024 in the example, is the effective date of the most current negotiated rate.

Union prevailing wage rates are updated to reflect all changes over time that are reported to WHD in the rates in the collective bargaining agreement (CBA) governing the classification.

Union Average Rate Identifiers

The UAVG identifier indicates that no single rate prevailed for those classifications, but that 100% of the data reported for the classifications reflected union rates. EXAMPLE: UAVG-OH-0010 01/01/2024. UAVG indicates that the rate is a weighted union average rate. OH indicates the State of Ohio. The next number, 0010 in the example, is an internal number used in producing the wage determination. The date, 01/01/2024 in the example, indicates the date the wage determination was updated to reflect the most current union average rate.

A UAVG rate will be updated once a year, usually in January, to reflect a weighted average of the current rates in the collective bargaining agreements on which the rate is based.

Survey Rate Identifiers

The ""SU"" identifier indicates that either a single non-union rate prevailed (as defined in 29 CFR 1.2) for this classification in the survey or that the rate was derived by computing a weighted average rate based on all the rates reported in the survey for that classification. As a weighted average rate includes all rates reported in the survey, it may include both union and non-union rates. Example: SUFL2022-007 6/27/2024. SU indicates the rate is a single non-union prevailing rate or a weighted average of survey data for that classification. FL indicates the State of Florida. 2022 is the year of the survey on which these classifications and rates are based. The next number, 007 in the example, is an internal number used in producing the wage determination. The date, 6/27/2024 in the example, indicates the survey completion date for the classifications and rates under that identifier.

?SU? wage rates typically remain in effect until a new survey is conducted. However, the Wage and Hour Division (WHD) has the discretion to update such rates under 29 CFR 1.6(c)(1).

State Adopted Rate Identifiers

The ""SA"" identifier indicates that the classifications and prevailing wage rates set by a state (or local) government were adopted under 29 C.F.R 1.3(g)-(h). Example: SAME2023-007 01/03/2024. SA reflects that the rates are state adopted. ME refers to the State of Maine. 2023 is the year during which the state completed the survey on which the listed classifications and rates are based. The next number, 007 in the example, is an

internal number used in producing the wage determination. The date, 01/03/2024 in the example, reflects the date on which the classifications and rates under the ?SA? identifier took effect under state law in the state from which the rates were adopted.

WAGE DETERMINATION APPEALS PROCESS

1) Has there been an initial decision in the matter? This can be:

a) a survey underlying a wage determination
b) an existing published wage determination
c) an initial WHD letter setting forth a position on a wage determination matter
d) an initial conformance (additional classification and rate) determination

On survey related matters, initial contact, including requests for summaries of surveys, should be directed to the WHD Branch of Wage Surveys. Requests can be submitted via email to davisbaconinfo@dol.gov or by mail to:

Branch of Wage Surveys
Wage and Hour Division
U.S. Department of Labor
200 Constitution Avenue, N.W.
Washington, DC 20210

Regarding any other wage determination matter such as conformance decisions, requests for initial decisions should be directed to the WHD Branch of Construction Wage Determinations. Requests can be submitted via email to BCWD-Office@dol.gov or by mail to:

Branch of Construction Wage Determinations
Wage and Hour Division
U.S. Department of Labor
200 Constitution Avenue, N.W.
Washington, DC 20210

2) If an initial decision has been issued, then any interested party (those affected by the action) that disagrees with the decision can request review and reconsideration from the Wage and Hour Administrator (See 29 CFR Part 1.8 and 29 CFR Part 7). Requests for review and reconsideration can be submitted via email to dba.reconsideration@dol.gov or by mail to:

Wage and Hour Administrator
U.S. Department of Labor
200 Constitution Avenue, N.W.
Washington, DC 20210

The request should be accompanied by a full statement of the interested party's position and any information (wage payment data, project description, area practice material, etc.) that the requestor considers relevant to the issue.

3) If the decision of the Administrator is not favorable, an interested party may appeal directly to the Administrative Review Board (formerly the Wage Appeals Board). Write to:

Administrative Review Board

U.S. Department of Labor
200 Constitution Avenue, N.W.
Washington, DC 20210.

==========

END OF GENERAL DECISION"

APPENDIX C – Construction Plans

CITY OF MOUNTLAKE TERRACE

TRANSIT CONNECTION CORRIDOR PROJECT - C2202

FA#: CDS 0815(007)
MARCH 2026

Otak

CITY OF MOUNTLAKE TERRACE

CITY OFFICIALS

MAYOR
STEVE WOODARD
PUBLIC WORKS DIRECTOR
GARY SCHIMEK
CITY COUNCIL
SAM DOYLE
WILLIAM PAIGE, JR.
KYOKO MATSUMOTO WRIGHT
BRYAN WAHL
LAURA SONMORE
ERIN MURRAY

PROJECT CONTACTS

NAME	AGENCY	PHONE
GARY SCHIMEK	PUBLIC WORKS DIRECTOR	(425)744-6221
JEFF BETZ	RECREATION & PARKS DIRECTOR	(425)776-9173
JEFF NITEN	CITY MANAGER	(425)744-6207
RICH MEREDITH	CITY ENGINEER	(425)744-6275
TOM MOEHRLE	CONSTRUCTION INSPECTOR	(425)744-6277

UTILITY CONTACTS

NAME	AGENCY	PHONE
TIM NYE	CITY OF MOUNTLAKE TERRACE PUBLIC WORKS SUPERVISOR-STREETS/STORMWATER	(425)744-6227
SHAWN HJERT	CITY OF MOUNTLAKE TERRACE PUBLIC WORKS SUPERVISOR-WATER/SANITARY SEWERS	(425)744-6292

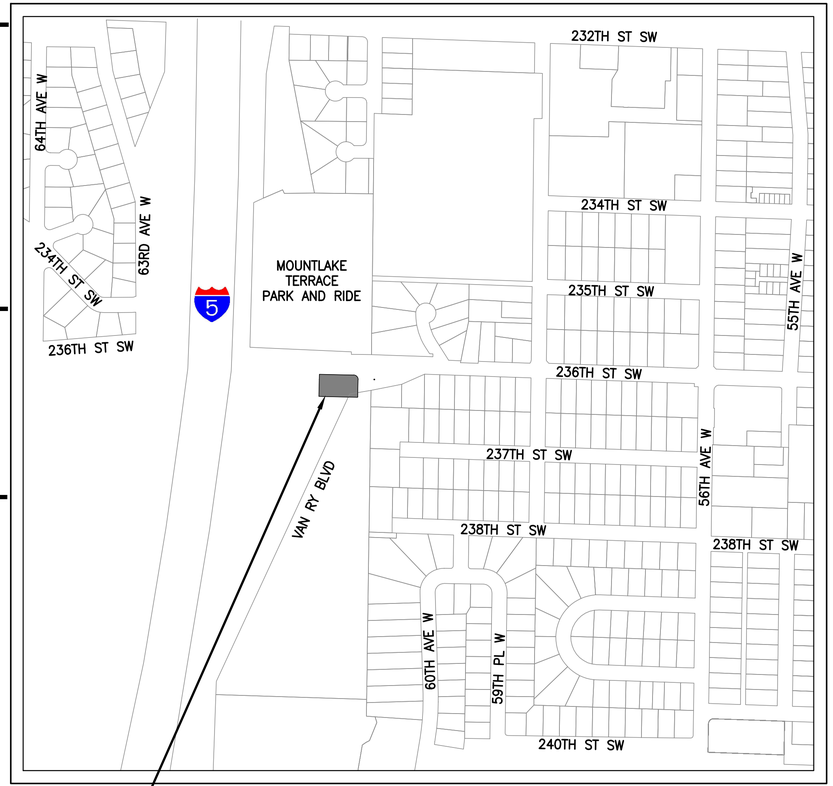

VICINITY MAP
NOT TO SCALE

PROJECT LOCATION

SHEET INDEX

SHEET NO.	DRAWING NO.	DESCRIPTION
1	G01	COVER SHEET
2	G02	ABBREVIATIONS AND SYMBOLS
3	G03	GENERAL NOTES
4	C00	HORIZONTAL ALIGNMENT, SURVEY CONTROL & EXISTING SITE CONDITIONS PLAN
5	C01	TESC AND DEMOLITION PLAN
6	C02	PLAZA CIVIL SITE PLAN
7	C03	PLAZA GRADING PLAN
8	C04	PROFILE AND GRADING SECTIONS
9	C05	DRAINAGE PLAN
10	C06	SITE DETAILS AND STANDARD PLANS
11	L01	PLAZA PLAN
12	L02	PLAZA PLANTING PLAN
13	L03	PLANTING DETAILS
14	L04	PLAZA SITE PLAN
15	L05	FURNISHING DETAILS
16	L06	FURNISHING DETAILS
17	L07	MOUNTLAKE TERRACE SIGN
18	IR01	IRRIGATION PLAN
19	IR02	IRRIGATION DETAILS
20	S01	WALL LAYOUT
21	S02	WALL ELEVATIONS
22	S03	WALL ELEVATIONS
23	S04	WALL DETAILS
24	S05	WALL DETAILS
25	S06	WALL DETAILS
26	S07	GUARDRAIL DETAILS
27	S08	HANDRAIL DETAILS
28	IL01	PLAZA LIGHTING
29	IL02	PLAZA LIGHTING DETAILS
30	IL03	PLAZA LIGHTING DETAILS
31	S000	GENERAL NOTES, ABBREVIATIONS, LEGEND, SCULPTURE ELEVATION AND DETAILS

Plotted: Mar 18, 2026 - 10:38am Anna.Ly O:\PROJECT\32860\32869\CADD\ACAD\Dwg\G01.dwg Layout Name: G01

XREF_LIST
32809_TBK
ALSEAL_WA

LEGEND

EXISTING	PROPOSED	DESCRIPTION
		ELECTRICAL METER
		ELECTRICAL HANDHOLD
		POWER MANHOLE
		JUNCTION BOX
		SEWER MANHOLE
		SANITARY SEWER VALVE
		CLEANOUT
		CATCH BASIN
		CATCH BASIN (TYPE 2)
		STORM DRAIN MANHOLE
		SUBSURFACE JUNCTION BOX
		SURFACE JUNCTION BOX
		PEDESTRIAN POLE
		LIGHT POLE ORNAMENTAL
		LUMINAIRE HEAD
		WATER METER
		WATER VALVE
		WATER MANHOLE
		DOUBLE CHECK VALVE
		FIRE HYDRANT
		IRRIGATION BOX
		BOLLARD
		SIGN
		SURVEY CONTROL POINT
		SURVEY MONUMENT
		THRUST BLOCK
		QUARRY SPALLS

EXISTING	PROPOSED	DESCRIPTION
		RIGHT OF WAY CENTERLINE
		RIGHT OF WAY MARGIN
		EASEMENT
		PROPERTY LINE
X X		CHAIN LINK FENCE
W W		WATER LINE
SS		SEWER LINE (<12")
		SEWER LINE (>12")
SD	SD	STORM DRAIN LINE (<12")
		STORM DRAIN LINE (>12")
P P		POWER LINE
OHL		AERIAL LINE
G G		GAS LINE
FO		FIBER OPTIC LINE
COM		COMMUNICATION LINE
		RAILING (GUARD/HAND)
		DRIVEWAY CUTS / HC RAMPS
		UNDERGROUND UTILITY STRUCTURES
		EDGE OF GRAVEL / DIRT
	410	INTERMEDIATE CONTOUR
100	409	INDEX CONTOUR
		RAILING TYPE 1
		RAILING TYPE 2
		RAILING TYPE 3
		RAILING TYPE 4
		RETAINING WALL
		CONCRETE SIDEWALK PER CITY OF MOUNTLAKE TERRACE STD DTL 131
		CEMENT CONCRETE PLAZA PAVING WITH SAND FINISH
		CEMENT CONCRETE RAMP (MOMENT SLAB) PAVING WITH SAND FINISH
		ART SCULPTURE FOUNDATION
		HMA (GRIND AND OVERLAY)
		HMA (FULL DEPTH)

SEE APPLICABLE DISCIPLINE FOR ADDITIONAL LEGEND

ABBREVIATIONS

ABAND	ABANDONED
AC	ACRE
ACP	ASPHALT CONCRETE PAVEMENT
ADA	AMERICANS WITH DISABILITIES ACT
ADDL	ADDITIONAL
ADDM	ADDENDUM
ADJ	ADJUST
ALT	ALTERNATIVE
ALUM	ALUMINUM
APPD	APPROVED
APPROX	APPROXIMATE
AP	ANGLE POINT
APWA	AMERICAN PUBLIC WORKS ASSOCIATION
ASPH	ASPHALT
AVE	AVENUE
AVG	AVERAGE
BLDG	BUILDING
BLVD	BOULEVARD
BM	BENCH MARK
BMP	BEST MANAGEMENT PRACTICE
BOC	BACK OF CURB
BTWN	BETWEEN
CALCS	CALCULATIONS
CB	CATCH BASIN
CCP	CEMENT CONCRETE PIPE
CD	CONTRACT DOCUMENT
CERT	CERTIFY
CF	CUBIC FEET
CFS	CUBIC FEET PER SECOND
CI	CAST IRON
CIP	CAST IN PLACE
CL	CLASS
℄	CENTERLINE
CMP	CORRUGATED METAL PIPE
COM	COMMUNICATION LINE
COMB	COMBINED, COMBINATION
CONC	CONCRETE
CONN	CONNECT
CONST	CONSTRUCTED
CONT	CONTINUE(OUS)
CPSSP	CORRUGATED POLYETHYLENE STORM SEWER PIPE
CSBC	CRUSHED SURFACING BASE COURSE
CSTC	CRUSHED SURFACING TOP COURSE
CTR	CENTER
CY	CUBIC YARDS
D	DRAIN PIPE
DEG	DEGREE
DET	DETAIL
DI	DUCTILE IRON
DIAG	DIAGONAL
DIAM	DIAMETER
DIM	DIMENSION
DIST	DISTANCE, DISTRIBUTE(ION)
DWG	DRAWING
DWY	DRIVEWAY
E	EAST
EA	EACH
ELEV	ELEVATION
ELEC	ELECTRICAL
EMB	EMBANKMENT
ENGR	ENGINEER
EOP	EDGE OF PAVEMENT
EQ	EQUAL
EQUIP	EQUIPMENT
EQUIV	EQUIVALENT
ES	EACH SIDE
ESMT	EASEMENT
EST	ESTIMATE
ETC	ET CETERA
EXCL	EXCLUDE
EXIST	EXISTING
FG	FINISHED GROUND
FH	FIRE HYDRANT
FIG	FIGURE
FO	FIBER OPTIC
FOC	FACE OF CURB
FT, '	FOOT/FEET
FL	FLOW LINE
FROP	FLOW RESTRICTOR/OIL POLLUTION
G	GAS LINE
GAL	GALLON
GALV	GALVANIZED
GC	GENERAL CONTRACTOR
GEN	GENERAL
GND	GROUND
GV	GAS VALVE
HMA	HOT MIX ASPHALT
HORIZ	HORIZONTAL
HR	HOUR
HT	HEIGHT
HUND	HUNDRED
ID	INSIDE DIAMETER
IE	INVERT ELEVATION
IN, "	INCH(ES)
INCL	INCLUDE
INFO	INFORMATION
JB	JUNCTION BOX
JT	JOINT
KC	KING COUNTY
LB	POUND
LF	LINEAR FOOT/FEET
LN	LANE
LOC	LOCATE
LS	LUMP SUM
LT	LEFT
MATL	MATERIAL
MAX	MAXIMUM
MEAS	MEASURE
MH	MANHOLE
MIN	MINIMUM
MISC	MISCELLANEOUS
MP	MIDPOINT
MOD	MODIFY
MON	MONUMENT
MSE	MECHANICALLY STABILIZED EARTH
MUTCD	MANUAL ON UNIFORM TRAFFIC CONTROL DEVICES
N	NORTH
N/A	NOT APPLICABLE
NCHRP	NATIONAL COOPERATIVE HIGHWAY RESEARCH PROGRAM
NE	NORTHEAST
NIC	NOT IN CONTRACT
NO	NUMBER
NTS	NOT TO SCALE
NW	NORTHWEST
OC	ON CENTER
OD	OUTER DIAMETER
OHL	OVERHEAD UTILITY LINE
OP	OVERHEAD POWER
OPP	OPPOSITE
OT	OVERHEAD TELEPHONE
P	POLE, POWER
PED	PEDESTRIAN
PERF	PERFORATED
PERM	PERMANENT
PI	POINT OF INTERSECTION
PL	PROPERTY LINE
PNT	PAINT(ED)
PP	POWER POLE
PRELIM	PRELIMINARY
PREP	PREPARE(ATION)
PROP	PROPERTY/PROPOSED
PSI	POUNDS PER SQUARE INCH
PVC	POLYVINYL CHLORIDE
PVMT	PAVEMENT
QTY	QUANTITY
R	RADIUS
RD	ROAD
REF	REFERENCE
REG	REGULATION
REINF	REINFORCED
RELOC	RELOCATE
REQD	REQUIRED
REV	REVISE, REVISION
RFI	REQUEST FOR INFORMATION
ROW, R/W	RIGHT-OF-WAY
RT	RIGHT
S	SLOPE, SOUTH
SCHED	SCHEDULE
SD	STORM DRAIN
SE	SOUTHEAST
SECT	SECTION
SEP	SEPARATE
SERV	SERVICE
SF	SQUARE FOOT/FEET
SHT	SHEET
SIM	SIMILAR
SPEC	SPECIFICATION(S)
SR	STATE ROUTE
SS	SANITARY SEWER
SST	STAINLESS STEEL
ST	STREET
STA	STATION
STD	STANDARD
SUB	SUBSTITUTE
SW	SOUTHWEST
S/W	SIDEWALK
SY	SQUARE YARD
SYS	SYSTEM
TEL	TELEPHONE
TAN	TANGENT
TBM	TEMPORARY BENCH MARK
TCE	TEMPORARY CONSTRUCTION EASEMENT
TECH	TECHNICAL
TEMP	TEMPORARY
TESC	TEMPORARY EROSION & SEDIMENT CONTROL
TOC	TOP OF CURB
TYP	TYPICAL
UD	UNDERDRAIN PIPE
UG	UNDERGROUND
UNO	UNLESS NOTED OTHERWISE
UTIL	UTILITY
VAR	VARIATION, VARIES
VERT	VERTICAL
W	WEST, WATER
W/	WITH
WM	WATER METER
W/O	WITHOUT
WSE	WATER SURFACE ELEVATION
WSDOT	WASHINGTON STATE DEPARTMENT OF TRANSPORTATION
WV	WATER VALVE
XS	CROSS SECTION
YD	YARD
YR	YEAR
&	AND

CALL BEFORE YOU DIG 1-800-424-5555

NO.	REVISION COMMENTS	BY	REVIEW	DATE

DESIGNER

DRAWN BY

CHECKED BY

NICO M. VANDERHORST — STATE OF WASHINGTON — 30792 — REGISTERED PROFESSIONAL ENGINEER — 3/18/26

ANNA LY — STATE OF WASHINGTON — 53100 — REGISTERED PROFESSIONAL ENGINEER — 03/18/26

CITY OF MOUNTLAKE TERRACE

TRANSIT CONNECTION CORRIDOR

ABBREVIATIONS AND SYMBOLS

TITLE

Otak

32809

PROJECT NUMBER

G02

DRAWING NO.

SHEET 2 OF 31

© 2026 OTAK, INC.

Plotted: Mar 18, 2026 – 10:38am C:\PROJECT\32800\32809\CADD\ACAD\Dwg\G02.dwg Layout Name: G02

XREF LIST
32809_TBK
ALSEAL_WA

STANDARD CITY OF MOUNTLAKE TERRACE NOTES

GENERAL GRADING NOTES

1. ALL WORK AND MATERIALS SHALL BE IN ACCORDANCE WITH THE "STANDARD SPECIFICATIONS FOR ROAD, BRIDGE, AND MUNICIPAL CONSTRUCTION," WASHINGTON STATE DEPARTMENT OF TRANSPORTATION, CURRENT EDITION, TOGETHER WITH THE LATEST EDITION OF THE CITY OF MOUNTLAKE TERRACE ENGINEERING STANDARDS.
2. AN APPROVED COPY OF THESE PLANS MUST BE ON SITE WHENEVER CONSTRUCTION IS IN PROGRESS.
3. IT SHALL BE THE SOLE RESPONSIBILITY OF THE CONTRACTOR TO OBTAIN STREET USE AND ANY OTHER RELATED PERMITS PRIOR TO ANY CONSTRUCTION ACTIVITY IN CITY RIGHT-OF-WAY.
4. PRIOR TO ANY CONSTRUCTION ACTIVITY, A PRECONSTRUCTION MEETING SHALL BE REQUESTED VIA THE ONLINE PERMIT CENTER. FOLLOW THE INSTRUCTION BELOW TO CREATE YOUR ONLINE ACCOUNT:
   A. VISIT THE PERMITS & LICENSES WEBSITE: HTTPS://WWW.CITYOFMLT.COM/1993/
   B. CLICK ON 'APPLY ONLINE' IN THE BLUE TABLE AT THE TOP OF THE PAGE. THIS TAKES YOU TO THE PORTAL ACCOUNT PAGE.
   C. PLEASE CHOOSE "SIGN UP" TO CREATE YOUR ACCOUNT.
   D. YOU WILL BE PROMPTED TO VERIFY YOUR ACCOUNT VIA EMAIL, PLEASE DO SO.
5. ALL LOCATIONS OF EXISTING UTILITIES SHOWN HEREON HAVE BEEN ESTABLISHED BY FIELD SURVEY OR OBTAINED FROM AVAILABLE RECORDS AND SHOULD THEREFORE BE CONSIDERED APPROXIMATE ONLY AND NOT NECESSARILY COMPLETE. IT IS THE SOLE RESPONSIBILITY OF THE CONTRACTOR TO INDEPENDENTLY VERIFY THE ACCURACY OF ALL UTILITY LOCATIONS SHOWN, AND TO FURTHER DISCOVER AND AVOID ANY OTHER UTILITIES NOT SHOWN HEREON WHICH MAY BE AFFECTED BY THE IMPLEMENTATION OF THIS PLAN. THE CONTRACTOR SHALL CONTACT THE UTILITIES UNDERGROUND LOCATION SERVICE (1-800-424-5555) PRIOR TO CONSTRUCTION. THE OWNER OR HIS REPRESENTATIVE SHALL BE IMMEDIATELY CONTACTED IF A UTILITY CONFLICT EXISTS.
6. THE TEMPORARY EROSION/SEDIMENTATION CONTROL FACILITIES SHALL BE CONSTRUCTED PRIOR TO ANY GRADING OR EXTENSIVE LAND CLEARING IN ACCORDANCE WITH THE APPROVED TEMPORARY EROSION/SEDIMENTATION CONTROL PLANS. THESE FACILITIES MUST BE SATISFACTORILY MAINTAINED UNTIL CONSTRUCTION AND LANDSCAPING IS COMPLETED AND THE POTENTIAL FOR ON-SITE EROSION HAS PASSED.
7. ALL ROCKERIES SHALL CONFORM WITH THE CITY OF MOUNTLAKE TERRACE STANDARD PLAN NO. 610.
8. ALL EARTHWORK UNDER PAVING SHALL BE COMPACTED TO MINIMUM 95% DRY OPTIMUM DENSITY PER ASTM D-1557, OR LATEST REVISION, (MODIFIED PROCTOR).
9. UNLESS OTHERWISE NOTED, ALL ELEVATIONS SHOWN IN PAVED AREAS ON THE PLANS ARE TOP OF PAVING.
10. SEE TEMPORARY EROSION/SEDIMENTATION CONTROL GENERAL NOTES FOR ACCEPTABLE EROSION CONTROL MEASURES UPON COMPLETION OF GRADING.
11. MAJOR EXPOSED GRADED SLOPES SHOWN ON THESE PLANS SHALL BE PROTECTED WITH PLASTIC SHEETS UNTIL SUCH TIME AS THE VEGETATIVE COVER HAS BEEN ESTABLISHED SUFFICIENTLY TO ELIMINATE EROSION.
12. GRADES SHOWN REPRESENT THE ENGINEER'S ESTIMATE OF APPROXIMATE MINIMUM EARTHWORK, PRESERVATION OF THE MAXIMUM NUMBER OF EXISTING TREES, AND OTHER GRADING/SOIL CONSIDERATIONS. THE CONTRACTOR MAY ALTER THE GRADES SHOWN TO BETTER ACHIEVE THESE RESULTS, PROVIDED THAT ANY ALTERATION IS SUBJECT TO THE PRIOR APPROVAL IN WRITING BY THE ENGINEER, OWNER, AND THE APPROPRIATE DEPARTMENTS OF THE CITY OF MOUNTLAKE TERRACE.
13. THE SITE WORK IMPROVEMENTS SHALL BE CONSTRUCTED ACCORDING TO THE APPROVED PLANS WHICH ARE ON FILE IN THE ENGINEERING DEPARTMENT. ANY DEVIATION FROM THE APPROVED PLANS WILL REQUIRE APPROVAL FROM THE PROPER AGENCY.
14. THE CONTRACTOR SHALL KEEP PARKING LOTS AND STREETS CLEAN AT ALL TIMES BY SWEEPING. WASHING OF ANY STREETS, PARKING LOTS OR DRIVEWAYS TO REMOVE CONSTRUCTION RELATED DIRT IS STRICTLY FORBIDDEN AND SUBJECT TO FINES.
15. ALL PARKING AND DRIVEWAY AREAS TO HAVE POSITIVE DRAINAGE TO COLLECTION, CONVEYANCE SYSTEMS OR OVERLAND SHEET DRAIN AREAS AT A MINIMUM OF ONE PERCENT SLOPE. PLAN DETAILS SHALL NOT SUPERSEDE THIS REQUIREMENT.
16. OPEN-CUT ROAD CROSSINGS FOR UTILITY TRENCHES ON EXISTING TRAVELED ROADWAYS SHALL BE BACKFILLED IN ACCORDANCE WITH CITY OF MOUNTLAKE TERRACE STANDARD PLAN NOS. 162, 163 AND/OR 164 MECHANICALLY COMPACTED. CUTS INTO THE EXISTING ASPHALT SHALL BE NEAT LINE CUT WITH SAW IN A CONTINUOUS LINE. A TEMPORARY COLD MIX PATCH MUST BE PLACED IMMEDIATELY AFTER BACKFILL AND COMPACTION. A PERMANENT HOT MIX PATCH SHALL BE PLACED WITHIN 30 DAYS AND SHALL BE THE THICKNESS OF THE ORIGINAL ASPHALT, OR THREE (3) INCHES, WHICHEVER IS GREATER. A 2" THICK ATB TEMPORARY PATCH MAY BE USED IN LIEU OF A COLD MIX PATCH.
17. EXTRUDED CEMENT CONCRETE CURBS AROUND ASPHALT EDGES SHALL BE CONSTRUCTED IN ACCORDANCE WITH CITY OF MOUNTLAKE TERRACE STANDARD PLAN NO. 135.
18. EXISTING VEGETATION SHALL BE RETAINED IN AREAS WHERE GRADING IS UNNECESSARY.
19. ALL RECOMMENDATIONS MADE BY THE GEOTECHNICAL ENGINEER(S) UP TO NOW, OR AT ANY TIME IN THE FUTURE, INCLUDING, BUT NOT LIMITED TO RECOMMENDATIONS FOR CONSTRUCTION TECHNIQUES, CONSTRUCTION SCHEDULE, AND CONTROL OF STORM WATER RUNOFF THROUGHOUT THE PROJECT COMPLETION SHALL BE FOLLOWED. WHOMEVER CONSTRUCTS SITE IMPROVEMENTS SHALL RETAINED A LICENSED GEOTECHNICAL ENGINEER TO OVERSEE AND ADVISE DURING CONSTRUCTION AND SITE GRADING TO ASSURE THAT ALL GEOTECHNICAL RECOMMENDATIONS ARE ADHERED TO.
20. THE APPLICANT IS RESPONSIBLE FOR PROVIDING SPECIAL INSPECTION AND COMPACTION CERTIFICATION FOR THE BUILDING PADS, UTILITY TRENCHES, RETAINING WALLS AND DETENTION VAULT/ TANK BACKFILL.

STORM DRAINAGE GENERAL NOTES

1. ALL WORK AND MATERIALS SHALL BE IN ACCORDANCE WITH THE STANDARD SPECIFICATIONS FOR ROAD, BRIDGE, AND MUNICIPAL CONSTRUCTION, WASHINGTON STATE DEPARTMENT OF TRANSPORTATION, CURRENT EDITION.
2. A COPY OF THE APPROVED PLANS SHALL BE ON SITE WHENEVER CONSTRUCTION IS IN PROGRESS.
3. IT SHALL BE THE SOLE RESPONSIBILITY OF THE CONTRACTOR TO OBTAIN STREET USE AND ANY OTHER RELATED PERMITS PRIOR TO ANY CONSTRUCTION ACTIVITY IN CITY RIGHT-OF-WAY.
4. PRIOR TO ANY CONSTRUCTION ACTIVITY, A PRE-CONSTRUCTION MEETING SHALL BE REQUESTED VIA THE ONLINE PERMIT CENTER. FOLLOW THE INSTRUCTIONS BELOW TO CREATE YOUR ONLINE ACCOUNT:
   A. VISIT THE PERMITS & LICENSES WEBSITE: HTTPS://WWW.CITYOFMLT.COM/1993/
   B. CLICK ON "APPLY ONLINE" IN THE BLUE TABLE AT THE TOP OF THE PAGE. THIS TAKES YOU TO THE PORTAL ACCOUNT PAGE.
   C. PLEASE CHOOSE "SIGN UP" TO CREATE YOUR ACCOUNT.
   D. YOU WILL BE PROMPTED TO VERIFY YOUR ACCOUNT VIA EMAIL, PLEASE DO SO.
5. ALL LOCATIONS OF EXISTING UTILITIES SHALL BE VERIFIED BY FIELD SURVEY OR OBTAINED FROM AVAILABLE RECORDS AND SHOULD THEREFORE BE CONSIDERED APPROXIMATE ONLY AND NOT NECESSARILY COMPLETE. IT IS THE SOLE RESPONSIBILITY OF THE CONTRACTOR TO INDEPENDENTLY VERIFY ACCURACY OF ALL UTILITY LOCATIONS, AND TO FURTHER DISCOVER AND AVOID ANY OTHER UTILITIES NOT SHOWN WHICH MAY BE AFFECTED BY WORK IMPLEMENTATION. THE CONTRACTOR SHALL CONTACT UTILITIES UNDERGROUND LOCATION SERVICE (1-800-424-5555) PRIOR TO CONSTRUCTION. THE OWNER OR HIS REPRESENTATIVE SHALL BE IMMEDIATELY CONTACTED IF A UTILITY CONFLICT EXISTS.
5. CATCH BASINS, INLETS, YARD DRAINS, AND GRATES:
   A. ALL CATCH BASINS, INLETS, OR YARD DRAINS SHALL BE ONE OF THE FOLLOWING:
      1. YARD DRAIN - CITY OF MLT D&S NO. 411 OR EQUAL.
      2. CONCRETE INLET - WSDOT B-25.60 OR EQUAL.
      3. CATCH BASIN - TYPE I - WSDOT B-5.20 OR EQUAL.
      4. CATCH BASIN - TYPE IL - WSDOT B-5.40 OR EQUAL.
      5. CATCH BASIN - TYPE II - WSDOT B-10.20 OR EQUAL.
      6. OTHER CATCH BASIN TYPES SHALL BE APPROVED FOR INSTALLATION BY THE CITY ENGINEER.
      7. ALL TYPE II CATCH BASINS SHALL HAVE LADDERS OR SAFETY STEPS PER CITY OF MLT D&S NO. 332 OR EQUAL.
   B. LOCKING GRATES ARE REQUIRED ON INSTALLATIONS WITHIN ALL CITY RIGHT-OF-WAY AND CITY EASEMENT. ALL GRATES SHALL BE ONE OF THE FOLLOWING:
      1. CATCH BASINS TO BE CONSTRUCTED WITH A THROUGH-CURB INLET GRATE. SEE WSDOT STANDARD PLAN B-25.20
      2. ALL OTHER GRATES SHALL BE DUCTILE IRON, AND OF THE LOCKING TYPE. WSDOT B-30.30 AND B-30.50 FOR GRADES EQUAL OR MORE THAN 4 PERCENT.
      3. ALL CATCH BASIN FRAME AND GRATES IN THE CURB LINE SHALL BE FLUSH WITH THE PAVEMENT/CURB LEVEL. SOLID FRAME AND LIDS IN THE TRAVELED ROADWAY SHALL BE FLUSH.
      4. ALL OIL/WATER SEPARATOR AND DETENTION CONTROL CATCH BASIN GRATES SHALL BE OF THE LOCKING TYPE.
7. STORM SEWER PIPE:
   A. ALL STORM SEWER CONVEYANCE PIPE SHALL BE ONE OF THE FOLLOWING:
      1. CONCRETE, PER A.S.T.M. C-14, CLASS II, NON-REINFORCED BELL AND SPIGOT (WITH BELL FLUSH WITH C.B. WALL IF USED), WITH RUBBER GASKETS.
      2. PVC CONFORMING TO A.S.T.M. D-3034 - SDR 35.
      3. DUCTILE IRON CLASS 50 CONFORMING TO AWWA C 151.
      4. PIPE MAY BE ANY OF THE ABOVE PROVIDED:
         A) PIPE JOINTS MUST BE OF THE SAME MATERIALS.
         B) WHERE A PIPE MATERIAL IS SPECIFICALLY SHOWN ON THE PLAN, THAT MATERIAL MUST BE USED. ANY CHANGES TO THE PIPE MATERIAL SHOWN ON THE PLAN MUST BE PRE-APPROVED.
      5. MINIMUM PIPE COVER IS DEPENDENT ON PIPE TYPE.
      6. MINIMUM PIPE DIAMETER PERMITTED FOR PUBLIC FACILITIES IS 12".
8. ALL PIPE BEDDING SHALL CONFORM TO WSDOT STANDARD SPECIFICATIONS SECTION 7-08.3(1)C, STANDARD SPECIFICATIONS FOR DUCTILE IRON, PVC PIPE, OR CONCRETE PIPE. ALL TRENCH BACKFILL SHALL BE COMPACTED MINIMUM 95% DRY OPTIMUM DENSITY PER ASTM D1557, OR LATEST REVISION, (MODIFIED PROCTOR).
9. ALL PIPE SHALL BE LAID ON A PROPERLY PREPARED FOUNDATION ACCORDING TO STANDARD SPECIFICATIONS SECTION 7-08.3(2)B. THIS SHALL INCLUDE NECESSARY LEVELING OF THE TRENCH BOTTOM OR THE TOP OF THE FOUNDATION MATERIAL AS WELL AS PLACEMENT AND COMPACTION OF REQUIRED BEDDING MATERIAL TO UNIFORM GRADE SO THAT THE ENTIRE LENGTH OF THE PIPE WILL BE SUPPORTED ON A UNIFORMLY DENSE UNYIELDING BASE. IF THE NATIVE MATERIAL IN THE BOTTOM OF THE TRENCH MEETS THE REQUIREMENTS FOR "GRAVEL BACKFILL FOR PIPE ZONE BEDDING," WSDOT STANDARD SPECIFICATIONS SECTION 9-03.12(3), THE FIRST LIFT OF PIPE BEDDING MAY BE OMITTED, PROVIDED THE MATERIAL IN THE BOTTOM OF THE TRENCH IS LOOSENED, REGRADED, AND COMPACTED TO FORM A DENSE UNYIELDING BASE.
10. ALL ROOF AND FOOTING DRAINS SHALL BE LOCATED IN THE FIELD AND ADJUSTED AS NECESSARY TO AVOID IMPACTING EXISTING TREES TO BE SAVED AS DENOTED ON THE GRADING PLAN. DRAIN LINES SHOULD BE LOCATED OUTSIDE THE DRIPLINE OF TREES TO BE SAVED WHENEVER POSSIBLE.
11. BUILDINGS SHALL NOT BE PERMITTED WITHIN 10 FEET OF THE SPRING LINE OF ANY STORM DRAIN PIPE, OR WITHIN 15 FEET OF THE TOP OF A CHANNEL BANK. STORM SEWERS 6" DIAMETER OR LESS MAY BE LOCATED WITHIN 30" OF A STRUCTURE PROVIDED THAT THE SOIL SUPPORT PRISM IS NOT DISTURBED FOR THE ADJACENT FOUNDATION.
12. PRIOR TO OCCUPANCY OR FINAL APPROVAL, THE PERMANENT STORM DRAINAGE SYSTEM MUST BE CLEANED OUT BY PUMPING. (DO NOT PUMP OR DISPOSE OF THIS WASTE INTO ANY STREAM, STORM SEWER, OR SANITARY SEWER SYSTEM.)
13. RIP RAP ROCK FOR EROSION PROTECTION SHALL BE OF SOUND QUARRY ROCK PLACED TO A MINIMUM DEPTH OF ONE (1) FOOT. ROCK AGGREGATE TO BE AS FOLLOWS:

ROCK SIZE	PERCENTAGE
1/2" TO 2"	10% TO 40%
2" TO 4"	20% TO 40%
8"	40% TO 70%

15. TESTING OF ALL STORM SEWER PIPE WILL BE AT THE OPTION OF THE CITY OF MOUNTLAKE TERRACE. ALL PIPE WILL BE INSPECTED BY TV VIEWING AND SUBMITTED TO THE CITY AS A PERMANENT RECORD ON DVD OR REMOVABLE FLASH MEMORY
16. WHEN PLAIN ALUMINUM PIPE ARCH IS USED WHERE IT WILL BE IN CONTACT WITH CONCRETE OR CONCRETE PIPE, ALL ALUMINUM SURFACES IN CONTACT WITH THE CONCRETE OR CONCRETE PIPE SHALL BE PAINTED WITH TWO COATS OF PAINT. THE ALUMINUM PIPE TO BE PAINTED SHALL BE CLEANED WITH SOLVENT TO REMOVE CONTAMINANTS. AFTER CLEANING, THE PIPE SHALL BE PAINTED WITH TWO COATS OF PAINT CONFORMING TO FEDERAL SPECIFICATION TT-P-645 (PRIMER, PAINT, ZINC CHROMATE, ALKYD VEHICLE).
17. AN AS BUILT STORM SEWER DRAWING SHALL BE SUBMITTED FOR ALL DEVELOPMENTS, SHORT PLATS, AND SUBDIVISIONS.
18. SAND COLLARS OR OTHER CITY APPROVED COUPLINGS ARE REQUIRED ON ALL PVC PIPE CONNECTIONS TO CONCRETE CATCH BASINS OR MANHOLES.
19. FOR CITY MAINTAINED STORM SYSTEMS, TRASH RACKS SHALL BE INSTALLED ON THE UPSTREAM END OF PIPES OR CULVERTS.

WATER GENERAL NOTES

1. ALL WORK AND MATERIALS SHALL BE IN ACCORDANCE WITH THE "STANDARD SPECIFICATIONS FOR ROAD, BRIDGE, AND MUNICIPAL CONSTRUCTION," WASHINGTON STATE DEPARTMENT OF TRANSPORTATION, CURRENT EDITION,
2. AN APPROVED COPY OF THESE PLANS MUST BE ON SITE WHENEVER CONSTRUCTION IS IN PROGRESS.
3. IT SHALL BE THE SOLE RESPONSIBILITY OF THE CONTRACTOR TO OBTAIN THE APPROPRIATE PERMITS PRIOR TO ANY CONSTRUCTION ACTIVITY.
4. PRIOR TO ANY CONSTRUCTION ACTIVITY, A PRE-CONSTRUCTION MEETING SHALL BE REQUESTED VIA THE ONLINE PERMIT CENTER. FOLLOW THE INSTRUCTIONS BELOW TO CREATE YOUR ONLINE ACCOUNT:
   A. VISIT THE PERMITS & LICENSES WEBSITE: HTTPS://WWW.CITYOFMLT.COM/1993/
   B. CLICK ON "APPLY ONLINE" IN THE BLUE TABLE AT THE TOP OF THE PAGE. THIS TAKES YOU TO THE PORTAL ACCOUNT PAGE.
   C. PLEASE CHOOSE "SIGN UP" TO CREATE YOUR ACCOUNT.
   D. YOU WILL BE PROMPTED TO VERIFY YOUR ACCOUNT VIA EMAIL, PLEASE DO SO.
5. ALL LOCATIONS OF EXISTING UTILITIES SHOWN HEREON HAVE BEEN ESTABLISHED BY FIELD SURVEY OR OBTAINED FROM AVAILABLE RECORDS AND SHOULD THEREFORE BE CONSIDERED APPROXIMATE ONLY AND NOT NECESSARILY COMPLETE. IT IS THE SOLE RESPONSIBILITY OF THE CONTRACTOR TO INDEPENDENTLY VERIFY THE ACCURACY OF ALL UTILITY LOCATIONS SHOWN, AND TO FURTHER DISCOVER AND AVOID ANY OTHER UTILITIES NOT SHOWN HEREON WHICH MAY BE AFFECTED BY THE IMPLEMENTATION OF THIS PLAN. THE CONTRACTOR SHALL CONTACT THE UTILITIES UNDERGROUND LOCATION SERVICE (1-800-424-5555) PRIOR TO CONSTRUCTION. THE OWNER OR HIS REPRESENTATIVE SHALL BE IMMEDIATELY CONTACTED IF A UTILITY CONFLICT EXISTS.
6. THE WATER MAIN DISTRIBUTION SYSTEM SHALL BE CONSTRUCTED ACCORDING TO THE APPROVED PLANS WHICH ARE ON FILE ON THE CITY OF MOUNTLAKE TERRACE ENGINEERING DEPARTMENT. ANY DEVIATION FROM THE APPROVED PLANS WILL REQUIRE WRITTEN APPROVAL FROM THE PROPER AGENCY.
7. CONNECTIONS TO EXISTING FACILITIES SHALL BE SEALED OFF UNTIL CONSTRUCTION IS COMPLETED. NO CONNECTIONS WILL BE ALLOWED UNTIL THE NEW WATER MAINS HAVE PASSED ALL PRESSURE AND PURITY TESTS.
8. WATER MAIN PIPE, BEDDING AND TRENCH COMPACTION:
   A. ALL WATER MAIN PIPES TO BE CEMENT LINED, CLASS 52 DUCTILE IRON, CONFORMING TO STANDARD SPECIFICATIONS 9-30.1(1). CEMENT MORTAR LINING AND SEAL COATING SHALL CONFORM TO ANSI/AWWA C104, OR LATEST REVISION.
   B. PIPE JOINTS TO BE PUSH-ON, MECHANICAL OR FLANGE JOINTS.
   C. ALL WATER MAIN PIPE FITTINGS SHALL MEET ANSI/AWWA C110, AND TO BE CEMENT MORTAR LINED AND SEAL COATED CONFORMING TO ANSI/AWWA C104 OR LATEST REVISIONS.
   D. PIPE BEDDING SHALL BE 5/8" MINUS CRUSHED SURFACING TOP COURSE (CSTC) OR AS DIRECTED BY THE ENGINEER OR AS DESIGNATED ON THE PLAN.
   E. ALL WATER MAIN CEMENT CONCRETE THRUST BLOCKS TO CONFORM TO STANDARD DETAILS SHOWN ON THE PLANS ON THE CITY OF MOUNTLAKE TERRACE STANDARD PLAN NO. 231 OR 232.
   F. PIPE SLEEVES SHALL BE CLASS 53 DUCTILE LONG BODY SLEEVES AND RESTRAINED WITH BOLT RESTRAINT SYSTEM UNI-FLANGE 1400 MJ RESTRAINER GLANDS.
   G. ALL WATER MAIN TRENCH BACKFILL SHALL BE COMPACTED TO MINIMUM 95% DRY OPTIMUM DENSITY PER ASTM D1557, OR LATEST REVISION, (MODIFIED PROCTOR) PRIOR TO TESTING WATER MAINS FOR ACCEPTANCE.
   H. ALL NEW OR NEW REPLACED WATER MAINS SHALL HAVE 14 AWG LOCATE WIRE BURIED IN THE TRENCH AND SHALL HAVE DETECTABLE WARNING TAPE BURIED IN THE TRENCH ONE FOOT ABOVE THE MAIN.
9. WHERE UTILITY CONFLICTS OCCUR, OTHER THAN SANITARY SEWER WATER MAINS ARE TO BE LOWERED TO CLEAR. SEE "CRITERIA FOR SEWAGE DESIGN", WASHINGTON STATE DEPARTMENT OF ECOLOGY FOR SEWER CONFLICTS. LINES SHALL BE MARKED AND STAKED FOR LINE AND GRADE.
10. ALL WATER MAINS SHALL BE PRESSURE TESTED AND DISINFECTED IN ACCORDANCE WITH THE SPECIFICATIONS OF THE WASHINGTON STATE HEALTH DEPARTMENT. ALL INSPECTION AND PRESSURE TESTING SHALL BE DONE IN THE PRESENCE OF, AND UNDER THE SUPERVISION OF, THE CITY ENGINEER AND/OR HIS REPRESENTATIVE. SEE TESTING AND FLUSHING AT THE END OF THESE NOTES.
11. CONTRACTOR TO PROVIDE PLUGS AND/OR TEMPORARY BLOW-OFF ASSEMBLIES FOR TESTING AND PURITY ACCEPTANCE PRIOR TO FINAL TIE IN.
12. ALL GATE VALVES TO BE RESILIENT SEATED AND SHALL BE MANUFACTURED TO MEET OR EXCEED THE REQUIREMENTS OF ANSI/AWWA C509, OR LATEST REVISION.
13. FIRE HYDRANTS:
   A. ALL FIRE HYDRANTS SHALL CONFORM TO THE CITY OF MOUNTLAKE TERRACE STANDARD PLAN NO. 251.
   B. ALL FIRE HYDRANT PORTS SHALL FACE PERPENDICULAR TO CURB AND TOWARD DRIVEWAY AS SHOWN ON THE PLANS.
14. WATER MAIN SERVICES:
   A. ALL WATER MAIN SERVICE LINES TO BE TYPE "K" COPPER. SERVICE CONNECTIONS SHALL BE IN ACCORDANCE WITH CITY OF MOUNTLAKE TERRACE STANDARD PLAN NO. 202, 203 OR NO. 204 (DOUBLE STRAPS AND CORPORATION STOPS).
   B. WATER METERS 2" AND SMALLER TO BE SUPPLIED AND INSTALLED BY THE CITY OF MOUNTLAKE TERRACE.
15. ALL VALVES, EXISTING AND NEW, SHALL BE OPERATED ONLY BY THE CITY OF MOUNTLAKE TERRACE. NO EXCEPTIONS!
16. A STATE APPROVED BACKFLOW PREVENTION DEVICE MUST BE INSTALLED ON ALL IRRIGATION SYSTEMS, FIRE SYSTEMS, INDUSTRIAL WATER SYSTEMS, AND ANY OTHER WATER CONNECTION THAT MAY HAVE A POSSIBILITY OF A CROSS CONTAMINATION CONNECTION AS DETERMINED BY THE CITY'S CERTIFIED CROSS CONNECTION TECHNICIAN.
17. CONSTRUCTION OF DEWATERING SYSTEMS SHALL BE IN ACCORDANCE WITH STANDARD SPECIFICATION SECTION 7-09.3(7)A.
18. AN AS BUILT WATER PLAN SHALL BE SUBMITTED FOR ALL DEVELOPMENTS, SHORT PLATS AND SUBDIVISIONS.
19. ALL TAPPING SLEEVES SHALL BE CAST IRON MJ OR AS DESIGNATED BY THE CITY ENGINEER.
20. WHERE THE UNDERGROUND SUPPLY TEES OFF TO SERVICE ONLY A FIRE SPRINKLER SYSTEM, A SEPARATE DETAILED PLAN MUST BE SUBMITTED AND APPROVED BY THE FIRE MARSHAL PRIOR TO INSTALLATION.
21. WEDDING RINGS SHALL BE CLASS 52 DUCTILE PIPE AND EQUAL TO OR LESS THAN TWO INCHES WIDE. GAPS BETWEEN WEDDING RING AND PIPE SHALL BE EQUAL TO OR LESS THAN 0.0625" (1/16 INCH).

TESTING + FLUSHING

HYDROSTATIC PRESSURE TEST:

1. THE CONTRACTOR SHALL PROVIDE AND OPERATE ALL NECESSARY EQUIPMENT FOR PERFORMING THE TEST.
2. THE MAIN SHALL BE TESTED AGAINST ALL VALVES, INCLUDING HYDRANT VALVES, WITH ALL SERVICES, BLOWOFFS, AND AIR RELEASE VALVES INSTALLED.
3. CHLORINE MUST BE USED IN TEST WATER.
4. NO AIR WILL BE ALLOWED IN THE LINE.
5. THE PRESSURE TEST SHALL BE 150 PSI OVER OPERATING PRESSURE, BUT NOT LESS THAN 225 PSI, AND SHALL NOT EXCEED THE RATED LINE PRESSURE WHEN TESTING AGAINST RESILIENT VALVES.
6. LINE PRESSURE SHALL NOT DROP MORE THAN 15 POUNDS IN 15 MINUTES.
7. THE CONTRACTOR SHALL BRING THE LINE TO TEST PRESSURE TO ENSURE THAT ALL EQUIPMENT IS IN GOOD WORKING ORDER AND THAT ALL AIR HAS BEEN RELEASED PRIOR TO REQUESTING THE INSPECTOR TO WITNESS THE TEST.
8. THE MAXIMUM LENGTH OF PIPE TESTED AT ONE TIME SHALL BE 1,500 FEET.

STERILIZATION AND FLUSHING:

1. THE CONTRACTOR SHALL STERILIZE ALL WATER MAINS IN ACCORDANCE WITH THE SPECIFICATIONS APPROVED BY THE WASHINGTON STATE DEPARTMENT OF HEALTH AND IN A MANNER SATISFACTORY TO THE CITY ENGINEER.
2. STERILIZATION SHALL BE BETWEEN ADJACENT GATE VALVES UNLESS OTHERWISE APPROVED BY THE ENGINEER.
3. CHLORINE SHALL BE APPLIED EITHER IN SOLUTION AND FED WITH A VALVE OR HYDRANT OPEN AT THE OPPOSITE END TO PERMIT A CONTINUOUS FLOW DURING APPLICATION, OR BY PLACEMENT OF DRY HYPOCHLORITE GRANULES IN EACH LENGTH OF DRY PIPE AS IT IS LAID. THE NUMBER OF OUNCES OF 65% CALCIUM HYPOCHLORITE REQUIRED FOR AN 18-FOOT LENGTH OF PIPE EQUALS 0.0075879 , WHERE D IS THE DIAMETER OF THE PIPE IN INCHES.
4. WHEN A CHLORINE CONCENTRATION OF 50 PPM IS REACHED, THE LINE SHALL SIT UNDISTURBED FOR 24 HOURS. DURING THIS PERIOD, HYDRANT VALVES IN THE CHLORINATED SECTION SHALL BE OPERATED TO DISINFECT THE APPURTENANCES. THE LINE SHALL BE THOROUGHLY FLUSHED, REFILLED WITH PURE WATER, AND LEFT UNDISTURBED FOR AN ADDITIONAL 24 HOURS PRIOR TO TAKING A PURITY SAMPLE.
5. ALL WATER USED FOR FLUSHING SHALL COME FROM THE CITY WATER SUPPLY USING A FILL LINE WITH A DOUBLE CHECK VALVE ASSEMBLY AND HAND-OPERATED GATE VALVE INSTALLED AT THE HYDRANT. WATER SHALL BE FLUSHED INTO A SEWER MANHOLE.
6. AT NO TIME SHALL CHLORINATED WATER ENTER THE STORM SEWER SYSTEM OR ANY SURFACE WATER.
7. SAMPLES WILL BE COLLECTED AND TAKEN FOR TESTING BY CITY EMPLOYEES ON TUESDAY MORNINGS. SHOULD THE INITIAL TREATMENT RESULT IN AN UNSATISFACTORY BACTERIOLOGICAL TEST, THE LINE SHALL BE RECHLORINATED AND THE PROCEDURE REPEATED UNTIL SATISFACTORY RESULTS ARE OBTAINED. SEE AWWA STANDARD C-601.

CALL BEFORE YOU DIG 1-800-424-5555

NO.	REVISION COMMENTS	BY	REVIEW	DATE

DESIGNER | DRAWN BY | CHECKED BY

NICO M. VANDERHORST — STATE OF WASHINGTON — 30792 — REGISTERED PROFESSIONAL ENGINEER — 3/18/26

ANNA LY — STATE OF WASHINGTON — 53100 — REGISTERED PROFESSIONAL ENGINEER — 03/18/26

CITY OF MOUNTLAKE TERRACE
TRANSIT CONNECTION CORRIDOR
GENERAL NOTES

TITLE

Otak

32809
PROJECT NUMBER

G03
DRAWING NO.

SHEET 3 OF 31

© 2026 OTAK, INC.

Plotted: Mar 18, 2026 - 10:39am O:\PROJECT\32800\32809\CADD\ACAD\Dwg\G03.dwg Layout Name: G03

XREF LIST
32809_TBK
X13086ROWEX
XLLE-MTLK-VR1
C32809_R270
X13086PRP-236TH
Terrace Station X14384-SITE
X32809-SITE PLAN
C32809_R500
TERRACE STATION-031119_2013
SV-CC-CMLT0006
S20757B191
C32809_G430
XLLE-MTLK-VBP
ALSEAL_WA

1001
397.07
C-BM-FND
31005-40

STA 105+08.66, 48.42'LT (236TH ST SW)
STA 99+00.00, 0.00'T (RAMP CENTERLINE)
N: 289840.87
E: 1276317.49
BEGIN

STA 105+22.01, 0.00'T (236TH ST SW)
STA 99+50.23, 0.00'T (RAMP CENTERLINE)
N: 289792.00
E: 1276329.11

STA 105+35.24, 47.98'RT (236TH ST SW)
STA 100+00.00, 0.00'T (RAMP CENTERLINE)
N: 289743.58
E: 1276340.63
PC

3
408.36
C-BC

2
409.28
C-PKW

1
408.84
C-BC

236TH ST SW

99+00
102+00
105+00
106+00
107+00
108+00
109+00

L1
100+00
101+00
C1
RAMP
PLAZA
WSDOT RIGHT OF WAY - I5
CITY RIGHT OF WAY

30+00
29+00
28+00
27+00

VAN RY BLVD

STA 30+01.89, 0.00'T (VAN RY BLVD)
STA 106+55.81, 0.00'RT (236TH ST SW)
N: 289787.25
E: 1276462.83

236TH ST SW CONSTRUCTION CENTERLINE PER MAIN STREET REVITALIZATION PROJECT SHOWN FOR REFERENCE ONLY

VAN RY BLVD CONSTRUCTION CENTERLINE PER MAIN STREET REVITALIZATION PROJECT SHOWN FOR REFERENCE ONLY

STA 28+89.36, 38.00'LT (VAN RY BLVD)
STA 106+19.89, 113.20'RT (236TH ST SW)
STA 101+14.66, 0.00'T (RAMP CENTERLINE)
N: 289675.40
E: 1276422.92
PT

STA 28+88.24, 0.00'LT (VAN RY BLVD)
STA 106+57.91, 113.62'RT (236TH ST SW)
STA 101+52.68, 0.00'RT (RAMP CENTERLINE)
N: 289673.63
E: 1276460.89

STA 28+86.85, 47.30'RT (VAN RY BLVD)
STA 107+05.09, 114.18'RT (236TH ST SW)
STA 102+00.00, 0.00'RT (RAMP CENTERLINE)
N: 289671.42
E: 1276508.16
END

MIC117
MIC116

RAMP CONSTRUCTION CENTERLINE
PROPERTY LINE
CONSTRUCTION EASEMENT
EXISTING ECOLOGY BLOCK WALL

UTILITY EASEMENT PER MAIN STREET REVITALIZATION PROJECT SHOWN FOR REFERENCES ONLY

REC NO 1410368 AND 1422149 GRANTS TO THE CITY OF MOUNTLAKE TERRACE A 10.0' EASEMENT AND RIGHT OF WAY FOR SEWER PIPE LINE EACH DOCUMENT CONVEYS FROM DIFFERENT GRANTORS AND THEIR INTERESTS.

REC NO 462331 AND 448190, GRANTA PACIFIC TELEPHONE AND TELEGRAPH COMPANY A RIGHT OF WAY WITH THE RIGHT TO PLACE, OPERATE, REPAIR AND MAINTAIN UNDERGROUND CABLES WITH NECESSARY CONDUIT AND MANHOLES. THE CENTER LINE OF SAID CONDUIT TO BE PARALLEL WITH AND 21' WEST OF THE EAST LINE OF SECTION. DOCUMENTS DO NOT GIVE WIDTH OF RIGHT OF WAY, AN APPROXIMATION ONLY IS SHOWN IN DRAWING

REC NO. 2136780; 20' ESMT TO GENERAL TELEPHONE COMPANY OF THE NORTHWEST, INC

FLEMING FAMILY LOVING TRUST
00521100001500

WSDOT
27043200100200

TERRACE STATION
00520900201600

TERRACE STATION
27043200402300

BUDSEY
00520900201900

PARKER & BROADLEY
00520900202000

POTUZAK
00520900201800

59TH PL W

GATE
1' HIGH RET WALL
HOUSE
ASPH DRW
TEMP FN
CURB
R/W
WAVE FO
PAVED

SURVEY MAPPING NOTES

1. COORDINATES ARE NAD83(2011) WASHINGTON STATE PLANE NORTH ZONE.
2. ELEVATIONS ARE NAVD 88 BASED ON CITY OF MOUNTLAKE TERRACE BENCH MARK #GP 31005-40 EL=397.074
3. UNITS IN US SURVEY FEET.
4. CONTOURS SHOWN AT 1' INTERVALS.
5. THIS MAP IS A COMPOSITE PREPARED FROM A FIELD SURVEY DATED 9/8/2022, UPDATED 11/1/2023, AND BY DAVID EVANS AND ASSOCIATES, INC. ON 10/14/2024.

SURVEY CONTROL

POINT #	NORTHING	EASTING	ELEVATION	DESCRIPTION
2	289807.00	1276426.47	409.28	
3	289823.23	1276404.35	408.36	
1001	289831.76	1276004.68	397.07	31005-40
116	289776.49	1276775.67	432.49	MIC
117	289786.59	1276481.41	412.16	MIC

RAMP CENTERLINE ALIGNMENT

NUMBER	STATION	LENGTH	RADIUS	BEARING	DELTA
L1	99+00.00	100.00'		S13°22'44"E	
C1	100+00.00	114.66'	88.84'	S50°21'20"E	73°57'12"
L2	101+14.66	85.34'		S87°19'56"E	

HORZ SCALE 20 0 20 40 IN FEET

CALL BEFORE YOU DIG 1-800-424-5555

NO.	REVISION COMMENTS	BY	REVIEW	DATE

DESIGNER | DRAWN BY | CHECKED BY

NICO M. VANDERHORST
STATE OF WASHINGTON
30792
REGISTERED PROFESSIONAL ENGINEER
3/11/26

ANNA LY
STATE OF WASHINGTON
53100
REGISTERED PROFESSIONAL ENGINEER
03/11/26

CITY OF MOUNTLAKE TERRACE
TRANSIT CONNECTION CORRIDOR
HORIZONTAL ALIGNMENT, SURVEY CONTROL
EXISTING SITE CONDITIONS PLAN

TITLE

Otak

32809
PROJECT NUMBER

C00
DRAWING NO.

SHEET 4 OF 31

© 2026 OTAK, INC.

Plotted: Mar 18, 2026 - 10:40am O:\PROJECT\32800\32809\CADD\ACAD\Dwg\C00.dwg Layout Name: C00

XREF LIST

32809_TBK
CIVIL WALLS EXPORT
X14384-SITE
X32809-FG
X32809-LANDSCAPE PLAN
X32809-PAVING
XLLE-MTLK-VCB
X14384-ST PLAZA 3 TO 1-FG-REV
X32809-SITE PLAN
XLLE-MTLK-VBB
XL300-L90-UCP100
XL300-L90-UCP100
X13086UTIL
X13086PRP-JUY02
XL300-L90-CCP100
XL300-L90-CDP100
XL300-L90-SWP100
XL300-N19-CRP100
X32809-IRRIG
X13086ST_JUT
SV-CC-CML70006
S20757B191
ALSEAL_WA
C32809_T460
C32809_N001
C32809_R270

RAMP CONSTRUCTION CENTERLINE 1

VAN RY BLVD

236th ST SW

1
408.84
C-BC

2
409.28
C-PKW

3
408.36
C-BC

100+00
101+00
105+00
106+00

SSMH
RIM=409.39

PLANTER 3

3 TREE
3 LIGHT POLE
3 WALL
5 FENCE (72 LF)
3 MANHOLE, ADJUST TO FINISHED GRADE
3 PIPE
5 TREE (TYP.)
3 SIGNAL
3 VAULT, ADJUST TO FINISHED GRADE
10 TREE

TESC AND DEMOLITION NOTES

1. CONSTRUCTION CENTERLINE, SEE SHEETS C00 FOR DATA.
2. INSTALL HIGH VISIBILITY SILT FENCE PER WSDOT STD PLAN I-30.17-01.
3. PROTECT EXISTING FEATURES TO REMAIN.
4. REMOVE EXISTING PAVEMENT OR GRAVEL, LIMITS PER PLAN.
5. REMOVE EXISTING FEATURE.
6. EXISTING TREE TO REMAIN. INSTALL AND MAINTAIN TEMPORARY TREE PROTECTION PER CITY OF MOUNTLAKE TERRACE STD DTL 413.
7. FIELD LOCATE AND CAP EXISTING IRRIGATION LATERALS AT LIMIT OF WORK.
8. INSTALL TEMPORARY SECURITY FENCE PER DETAIL ON DWG C06.
9. INSTALL INLET PROTECTION PER WSDOT STD PLAN I-40.20-00.
10. REMOVE EXISTING STREET TREE AND ROOTBALL. INSTALL PROTECTION FOR EXISTING IRRIGATION AND TREE GRATE.
11. PROTECT EXISTING SIDEWALK AND CURB AND GUTTER. SEE GENERAL NOTE 2.

GENERAL NOTES

1. LOCATION OF TESC MEASURES SHOWN ARE APPROXIMATE AND SHALL BE FIELD LOCATED TO ACCOMMODATE SITE CONDITIONS AND WORK SCHEDULE.
2. PROTECT EXISTING SIDEWALK ADJACENT TO WORK AREA. CONTRACTOR SHALL EMPLOY METHODS AND MEANS TO PREVENT DAMAGE FROM EQUIPMENT, EXCAVATION, OR MATERIAL STORAGE. ANY DAMAGE TO EXISTING SIDEWALK RESULTING FROM THE CONTRACTORS OPERATIONS SHALL BE REPAIRED OR REPLACED AT NO ADDITIONAL COST TO THE CITY. REPLACEMENT SIDEWALK SHALL MATCH CITY STANDARD DETAILS AND EXISTING GRADES.

LEGEND

- SILT FENCE/CLEARING LIMITS
- TEMPORARY SECURITY FENCE
- SAWCUT LINE, ALONG EX. JOINT LINE
- CLEARING AND GRUBBING LIMITS
- PAVEMENT/GRAVEL REMOVAL
- TREE AND ROOT REMOVAL
- INLET PROTECTION
- TREE PROTECTION

HORZ SCALE 10 0 10 20 IN FEET

CALL BEFORE YOU DIG 1-800-424-5555

NO.	REVISION COMMENTS	BY	REVIEW	DATE

DESIGNER
DRAWN BY
CHECKED BY

NICO M. VANDERHORST
STATE OF WASHINGTON
30792
REGISTERED PROFESSIONAL ENGINEER
3/11/26

ANNA LY
STATE OF WASHINGTON
53100
REGISTERED PROFESSIONAL ENGINEER
03/11/26

CITY OF MOUNTLAKE TERRACE
TRANSIT CONNECTION CORRIDOR
TESC AND DEMOLITION PLAN

TITLE

Otak

32809
PROJECT NUMBER

C01
DRAWING NO.

SHEET 5 OF 31

© 2026 OTAK, INC.

Plotted: Mar 18, 2026 - 10:41am O:\PROJECT\32800\32809\CADD\ACAD\Dwg\C01.dwg Layout Name: C01

XREF LIST
32809_TBK
X14384-FG
X14384-LP
Terrace
X14384-ST PLAZA 3 TO 1-FG-REV
X32809-LANDSCAPE PLAN
X32809-PAVING
C32809_G430
32809_R270
X32809-SITE PLAN
C32809_N033
X13086PRP-236TH
X13086UTIL
X32809-IRRIG
SV-CC-CMLT0006
S20757B191
ALSEAL_WA
C32809_T460
C32809_U630

N: 289743.80
E: 1276334.60
10 BEGIN

N: 289743.64
E: 1276338.05
1 9

N: 289759.33
E: 1276334.89
13 BEGIN

N: 289770.21
E: 1276335.10
14 BEGIN

N: 289763.71
E: 1276336.25
12 BEGIN

N: 289763.55
E: 1276343.08
12 END

N: 289769.96
E: 1276345.30
14 END

N: 289759.11
E: 1276345.04
13 END

N: 289741.64
E: 1276344.22
4

N: 289746.46
E: 1276344.80
10

N: 289743.45
E: 1276346.11
1 4

N: 289722.15
E: 1276352.18
4 9

5.50'

RAMP

L=30.09'
R=85.84'
Δ=20.09

N: 289714.74
E: 1276362.63
2 AP

L=4.78'
R=28.56'
Δ=9.59

L=6.43'
R=26.06'
Δ=14.14

N: 289714.36
E: 1276365.10
2 AP

N: 289700.13
E: 1276372.27
2 BASIS OF PAVING LAYOUT

N: 289728.29
E: 1276368.18
2 BASIS OF PAVING LAYOUT

N: 289742.96
E: 1276367.70
4 9

N: 289703.29
E: 1276368.17
2 AP

N: 289709.60
E: 1276364.78
2 AP

L=26.77'
R=31.06'
Δ=49.39

N: 289709.64
E: 1276367.28
2 AP

N: 289736.42
E: 1276376.88
2 AP

N: 289693.28
E: 1276378.61
2 BASIS OF PAVING LAYOUT

N: 289734.30
E: 1276378.20
2 AP

N: 289714.62
E: 1276377.83

S47° 41' 13.95"W 36.012'

N: 289697.64
E: 1276372.77
2 GB

N: 289707.43
E: 1276381.01

N: 289738.70
E: 1276389.35
2 GB, BASIS OF PAVING LAYOUT

L=5.24'
R=28.11'
Δ=10.67

N: 289697.51
E: 1276381.04

N: 289723.18
E: 1276380.44

ART SCULPTURE FOUNDATION
N: 289715.78
E: 1276387.83
ELE: 410.06

N: 289735.87
E: 1276387.18
3

N: 289739.04
E: 1276390.84
2 AP

N: 289725.21
E: 1276389.19

S47° 41' 13.95"W 56.630'

N: 289699.87
E: 1276381.53

N: 289695.01
E: 1276389.67

S47° 41' 13.95"W 56.603'

N: 289724.93
E: 1276390.86

N42° 18' 46.05"W 56.989'

R7.00'

N: 289736.55
E: 1276391.31
2 AP

N: 289685.69
E: 1276392.21
2 GB

N: 289728.72
E: 1276390.55
8 AP

L=5.41'
R=43.66'
Δ=7.10

N: 289736.94
E: 1276400.97
6

N: 289737.28
E: 1276396.67
2 PC

N: 289737.28
E: 1276401.20
2 AP

N: 289685.92
E: 1276394.64
2 AP

N: 289745.02
E: 1276400.44
10

N: 289756.93
E: 1276400.64
10

L=9.69'
R=26.82'
Δ=20.71

N: 289685.62
E: 1276395.36
2 AP

N: 289710.52
E: 1276396.76

N: 289719.40
E: 1276397.93

N: 289726.11
E: 1276400.81
2

N: 289742.16
E: 1276402.87
2 9 AP

N: 289688.82
E: 1276402.66
3

N: 289702.98
E: 1276395.91

N: 289701.27
E: 1276396.10

N42° 18' 46.05"W 44.617'

N: 289737.17
E: 1276403.37
2 GB

N: 289743.96
E: 1276407.81
10

N: 289688.04
E: 1276404.70
2 AP

N: 289708.75
E: 1276408.73
8 AP

PLAZA

N: 289738.45
E: 1276402.87
2 AP

N: 289719.21
E: 1276407.09
2

N: 289756.96
E: 1276404.84
10

N: 289686.15
E: 1276406.54
2 BASIS OF PAVING LAYOUT

N: 289741.98
E: 1276410.64
2 AP

N: 289705.71
E: 1276419.39
2 GB, BASIS OF PAVING LAYOUT

N: 289715.02
E: 1276418.26
3

N: 289748.68
E: 1276408.91
10

N: 289738.23
E: 1276414.12
2 BASIS OF PAVING LAYOUT

N: 289685.77
E: 1276405.75
2 AP

L=18.77'
R=29.32'
Δ=36.67

L=19.80'
R=26.82'
Δ=42.31

N: 289720.71
E: 1276418.35
2 GB

N: 289718.54
E: 1276419.50
2 AP

N: 289720.21
E: 1276419.52
2

N: 289731.40
E: 1276420.49
2 BASIS OF PAVING LAYOUT

N: 289698.40
E: 1276419.19
2 AP

N: 289712.89
E: 1276423.56
11 END
10 BEGIN

N: 289720.21
E: 1276423.68
2 9 AP

N: 289727.83
E: 1276423.81
2 AP

N: 289738.62
E: 1276422.30
10

EXISTING JOINT 11

N: 289688.18
E: 1276423.14
2 MATCH EX.

N: 289699.60
E: 1276416.99
2 AP

SSMH
RIM = 409.39

DEC
2"

N: 289712.94
E: 1276430.45
11 END
10 BEGIN

N: 289712.97
E: 1276435.58
10 BEGIN

N: 289726.05
E: 1276435.69
10

N: 289734.15
E: 1276424.72
10

VAN RY BLVD

236th ST SW

106+00

CONSTRUCTION CENTERLINE PER MAIN STREET REVITALIZATION PROJECT SHOWN FOR REFERENCES ONLY

SD
TS
S

CONSTRUCTION NOTES

1. CEMENT CONCRETE RAMP (MOMENT SLAB) PER PROFILE ON SHEET C04, PAVING SECTION ON SHEET S06 AND PAVING PATTERN ON L01.
2. CEMENT CONCRETE PLAZA PAVING PER TYPICAL SECTION ON SHEET C04, PAVING SECTION ON SHEET L04 AND PAVING PATTERN ON L01.
3. PEDEATRIAN LIGHTING, SEE ILLUMINATION SHEETS IL01–IL02.
4. CONSTRUCT CEMENT CONCRETE PEDESTRIAN CURB PER WSDOT STANDARD PLAN F–10.12–04.
5. EXISTING WALL TO REMAIN. SEE STRUCTURAL SHEETS, S01–S08.
6. WAYFINDING SIGN, SEE SHEET L05.
7. NOT USED.
8. TREE PLANTING WITH TREE GRATE, SEE SHEET L06.
9. RETAINING WALL, SEE STRUCTURAL SHEETS, S01–S08.
10. CONSTRUCT CONCRETE SIDEWALK PER CITY OF MOUNTLAKE TERRRACE STD DTL 7A–220 AND STD DTL 131, AND PAVING PATTERN ON SHEET L01.
11. CONSTRUCT CONCRETE SIDEWALK PER CITY OF MOUNTLAKE TERRRACE STD DTL 131.
12. CONSTRUCT ROADWAY RECONSTRUCTION PER DETAIL ON SHEET C06.
13. CONSTRUCT CEMENT CONCRETE TRAFFIC CURB AND GUTTER PER CITY OF MOUNTLAKE TERRACE PLAN NO. 133.
14. CONSTRUCT 2" PAVEMENT GRIND AND OVERLAY.

GENERAL NOTES

1. SEE SHEETS C06 FOR SITE DETAILS AND STANDARD PLANS.
2. PROTECT EXISTING SIDEWALK ADJACENT TO WORK AREA. CONTRACTOR SHALL EMPLOY METHODS AND MEANS TO PREVENT DAMAGE FROM EQUIPMENT, EXCAVATION, OR MATERIAL STORAGE. ANY DAMAGE TO EXISTING SIDEWALK RESULTING FROM THE CONTRACTORS OPERATIONS SHALL BE REPAIRED OR REPLACED AT NO ADDITIONAL COST TO THE CITY. REPLACEMENT SIDEWALK SHALL MATCH CITY STANDARD DETAILS AND EXISTING GRADES.

LEGEND

- CONCRETE SIDEWALK PER CITY OF MOUNTLAKE TERRACE STD DTL 131
- CEMENT CONCRETE PLAZA PAVING WITH SAND FINISH
- CEMENT CONCRETE RAMP (MOMENT SLAB) PAVING WITH SAND FINISH
- ART SCULPTURE FOUNDATION
- HMA (GRIND AND OVERLAY)
- HMA (FULL DEPTH)

HORZ SCALE 5 0 5 10 IN FEET

CALL BEFORE YOU DIG 1–800–424–5555

NO.	REVISION COMMENTS	BY	REVIEW	DATE

DESIGNER | DRAWN BY | CHECKED BY

NICO M. VANDERHORST
STATE OF WASHINGTON
30792
REGISTERED PROFESSIONAL ENGINEER
3/18/26

ANNA LY
STATE OF WASHINGTON
53100
REGISTERED PROFESSIONAL ENGINEER
03/18/26

CITY OF MOUNTLAKE TERRACE
TRANSIT CONNECTION CORRIDOR
PLAZA CIVIL SITE PLAN

TITLE

Otak

32809
PROJECT NUMBER

C02
DRAWING NO.

SHEET 6 OF 31

© 2026 OTAK, INC.

Plotted: Mar 18, 2026 – 10:43am
O:\PROJECT\32800\32809\CAD\ACAD\Dwg\C02.dwg Layout Name: C02

XREF LIST
32809_TBK
X14384-FG
X14384-LP
Terrace Station
X32809-LANDSCAPE PLAN
X32809-PAVING
X32809-SITE PLAN
C32809_G430
C32809_N040
C32809_U630
C32809_R270
X13086UTIL
X14384-ST PLAZA 3 TO 1-FG-REV
X32809-STRUCTURES
SV-CC-CMLT0006
X13086PRP-236TH
S20757B191
ALSEAL_WA
C32809_T460

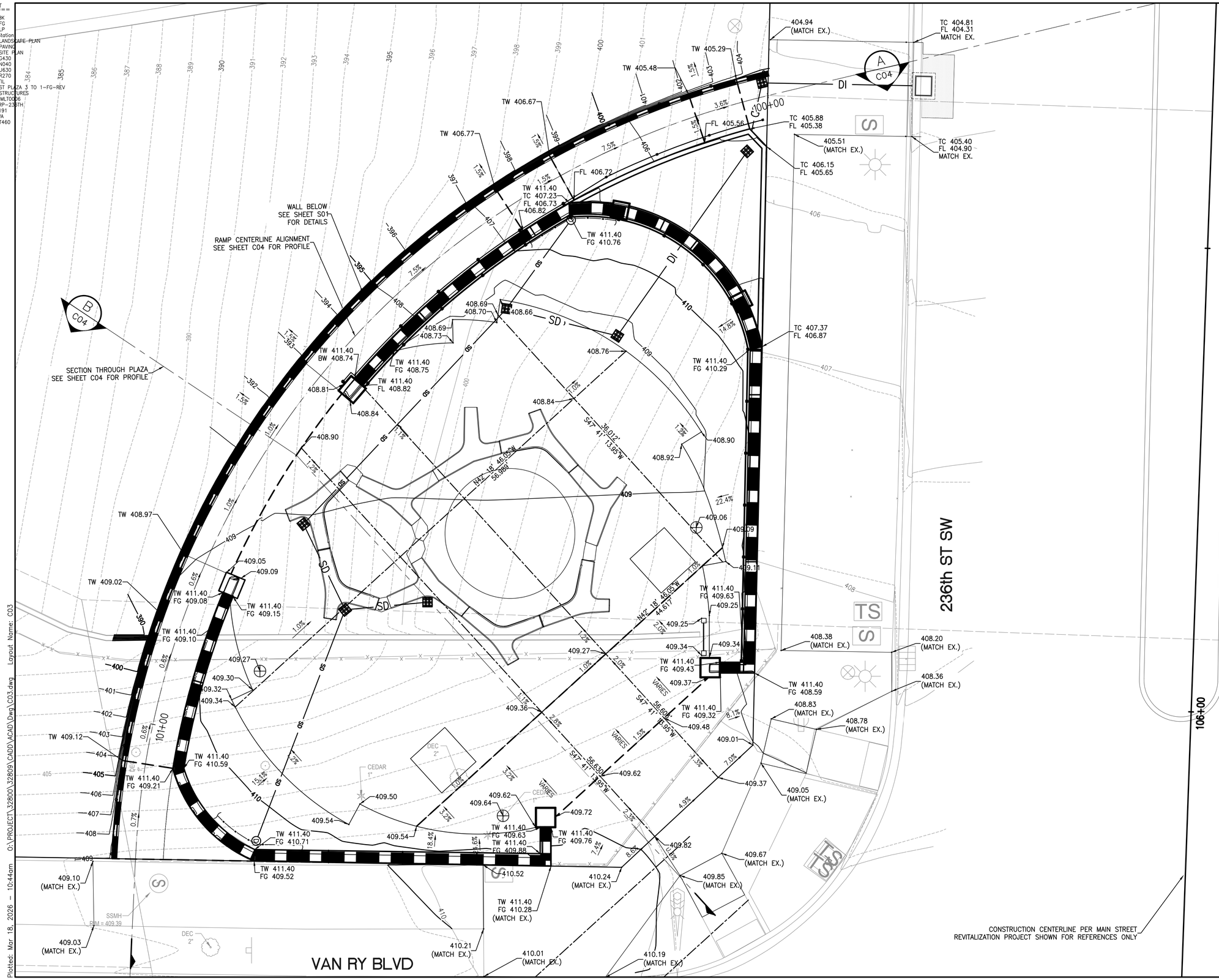

GENERAL NOTES

1. SEE SHEETS C06 FOR SITE DETAILS AND STANDARD PLANS.
2. SEE SHEETS C05 FOR DRAINAGE PLAN.

LEGEND

395	5 FT CONTOUR
391	1 FT CONTOUR
	GRADE BREAK
SD	STORM DRAIN
	12" CATCH BASIN DECORATIVE GRATE
	CATCH BASIN
	PEDESTRIAN LIGHTING
TW	TOP OF WALL
FG	FINISH GRADE ELEVATION
TC	TOP OF CURB
BC	BOTTOM OF CURB
FL	FLOWLINE
D	CLEANOUT

HORZ 5 0 5 10
SCALE IN FEET

CALL BEFORE YOU DIG 1-800-424-5555

DESIGNER	DRAWN BY	CHECKED BY

NO.	REVISION COMMENTS	BY	REVIEW	DATE

NICO M. VANDERHORST, STATE OF WASHINGTON, 30792, REGISTERED PROFESSIONAL ENGINEER 3/18/26

ANNA LY, STATE OF WASHINGTON, 53100, REGISTERED PROFESSIONAL ENGINEER 03/18/26

CITY OF MOUNTLAKE TERRACE
TRANSIT CONNECTION CORRIDOR
PLAZA GRADING PLAN

TITLE

Otak

32809
PROJECT NUMBER

C03
DRAWING NO.

SHEET 7 OF 31

© 2026 OTAK, INC.

Plotted: Mar 18, 2026 - 10:44am O:\PROJECT\32800\32809\CADD\ACAD\Dwg\C03.dwg Layout Name: C03

XREF LIST
32809_TBK
X14384-FG
X14384-LP
X14384-SITE
X14384-ST PLAZA 3 TO 1-FG-REV
X32809-LANDSCAPE PLAN
X32809-PAVING
X32809-SITE PLAN
C32809_C430
32809_R270
C32809_N032
C32809_R900
ALSEAL_WA

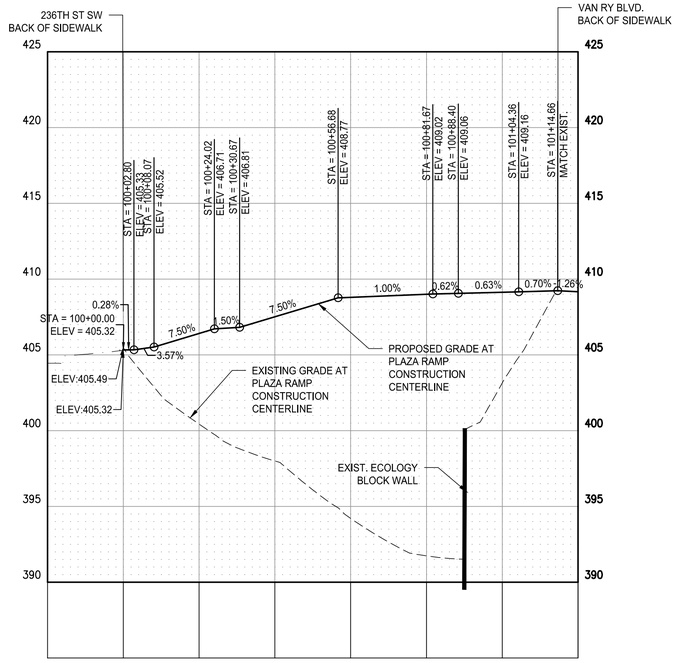

A C03 CEMENT CONCRETE RAMP (MOMENT SLAB) PROFILE

SCALE AS SHOWN

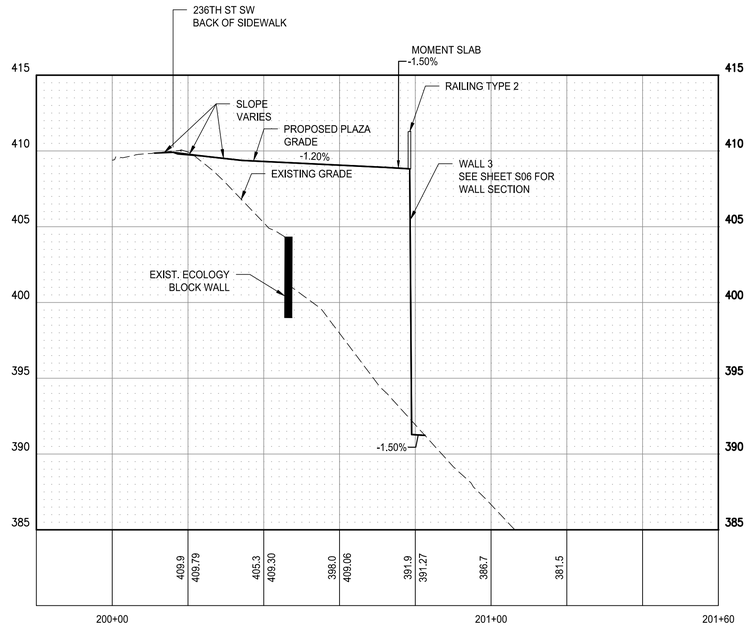

B C03 SECTION THROUGH PLAZA

SCALE AS SHOWN

GENERAL NOTES

1. SEE SHEET C06 FOR SITE DETAILS AND STANDARD PLANS.
2. SEE SHEETS S01–S08 FOR WALL DETAILS.
3. SEE SHEETS C03 FOR PLAZA GRADING PLAN.

HORZ SCALE: 20 0 20 40 IN FEET

VERT SCALE: 5 0 5 10 IN FEET

CALL BEFORE YOU DIG 1-800-424-5555

NO.	REVISION COMMENTS	BY	REVIEW	DATE

DESIGNER | DRAWN BY | CHECKED BY

NICO M. VANDERHORST — STATE OF WASHINGTON — 30792 — PROFESSIONAL ENGINEER — 3/18/26

ANNA LY — STATE OF WASHINGTON — 53100 — PROFESSIONAL ENGINEER — 03/18/26

CITY OF MOUNTLAKE TERRACE

TRANSIT CONNECTION CORRIDOR
PROFILE AND GRADING SECTIONS

TITLE

Otak

32809
PROJECT NUMBER

C04
DRAWING NO.

SHEET 8 OF 31

© 2026 OTAK, INC.

Plotted: Mar 18, 2026 – 10:46am O:\PROJECT\32800\32809\CADD\ACAD\Dwg\C04.dwg Layout Name: C04

XREF LIST
32809_TBK
CIVIL WALLS EXPORT
X14384-SITE
X32809-FG
X32809-LANDSCAPE PLAN
X32809-PAVING
XLLE-MTLK-VCB
C32809_G430
X14384-ST PLAZA 3 TO 1-FG-REV
X32809-SITE PLAN
XLLE-MTLK-VBK
XL300-L90-UCP100
C32809_N050
XL300-L90-UCV100
C32809_U630
X13086PRP-JUT02
XL300-L90-CGP100
XL300-L90-CDR100
XL300-L90-SWP100
XL300-N19-CRP100
X32809-IRRG
X13086ST_JUT
SV-CC-CMLT0006
S20757B191
ALSEAL_WA

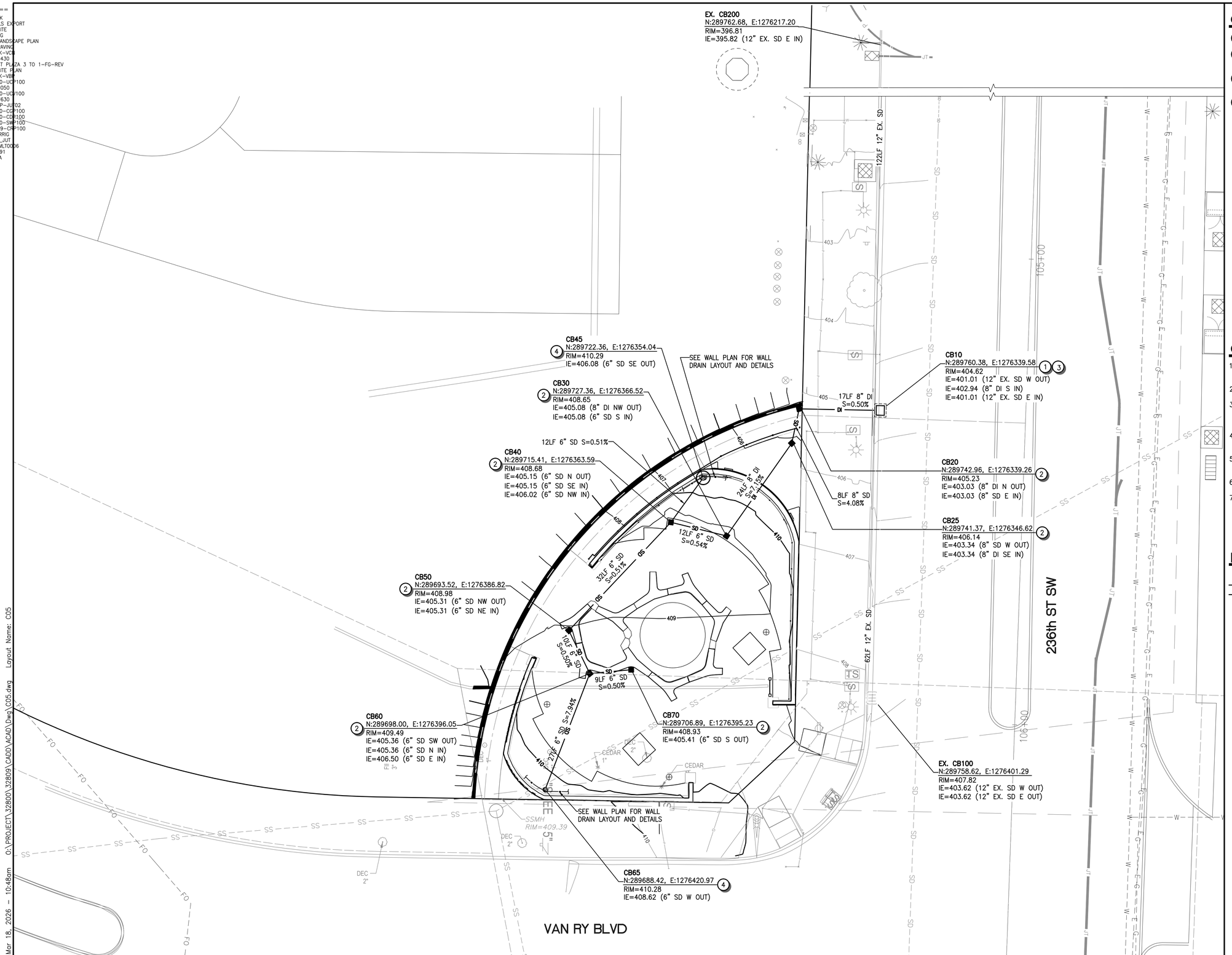

CONSTRUCTION NOTES

1. CONNECT TO EXISTING STORM DRAINAGE SYSTEM.
2. INSTALL 12" CATCH BASIN WITH DECORATIVE GRATE PER DETAIL ON SHEET C06 OR APPROVED EQUAL.
3. INSTALL CATCH BASIN TYPE 1 PER WSDOT STD PLAN NO. B-5.20-03, SEE SHEET C06.
4. INSTALL CLEANOUT PER CITY OF MOUNTLAKE TERRACE STD PLAN NO. 442.

GENERAL NOTES

1. SEE SHEET C06 FOR SITE DETAILS AND STANDARD PLANS.
2. SEE SHEET IR01-IR02 FOR IRRIGATION PLAN.
3. CONTRACTOR SHALL VERIFY ELEVATIONS AND CONNECTIONS WITH EXISTING PIPES PRIOR TO INSTALLATION.
4. CONTRACTOR SHALL POTHOLE EXISTING UTILITY IN SIDEWALK PRIOR TO EXCAVATING.
5. SIDEWALK IMPROVEMENTS WILL BE PART OF MAIN STREET REVITALIZATION PROJECT.
6. SEE SHEET C03 FOR PLAZA GRADING PLAN.
7. SEE IL01-IL02 FOR PLAZA LIGHTING.

LEGEND

SD — STORM DRAIN (PVC SDR 35)
DI — STORM DRAIN (DUCTILE IRON)

HORZ SCALE 10 0 10 20 IN FEET

CALL BEFORE YOU DIG 1-800-424-5555

NO.	REVISION COMMENTS	BY	REVIEW	DATE

DESIGNER | DRAWN BY | CHECKED BY

NICO M. VANDERHORST — STATE OF WASHINGTON — 30792 — PROFESSIONAL ENGINEER — 3/18/26

ANNA LY — STATE OF WASHINGTON — 53100 — PROFESSIONAL ENGINEER — 03/18/26

CITY OF MOUNTLAKE TERRACE
TRANSIT CONNECTION CORRIDOR
DRAINAGE PLAN

TITLE

Otak

32809
PROJECT NUMBER

C05
DRAWING NO.

SHEET 9 OF 31

© 2026 OTAK, INC.

Plotted: Mar 18, 2026 - 10:48am O:\PROJECT\32800\32809\CADD\ACAD\Dwg\C05.dwg Layout Name: C05

XREF_LIST
32809_TBK
ALSEAL_WA

TOP

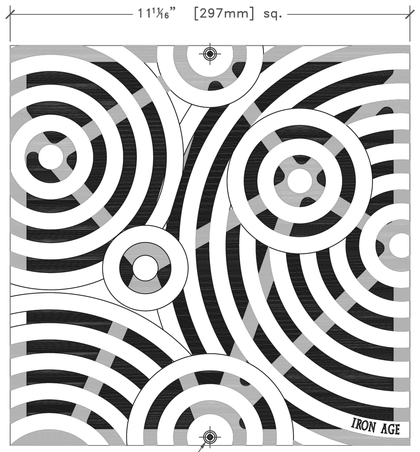

NOTES:
1. Material: cast iron
2. Natural finish
3. Total thickness: 1 1/8"
4. Fits: NDS 1200 series™ catch basin
5. No openings > 1/2"
6. Free Drain Area = 21%
7. Due to casting inconsistencies, all dimensions are nominal.

patent pending
© 2009 Iron Age Designs

IRON AGE DESIGNS
2104 SW 152nd st #4 Burien, WA 98166
TEL 206.276.0925 FAX 206.257.0318
www.ironagegrates.com

Oblio drain 12" sq.
drawing no. OBL.N.12x12

drawn by: CD
scale: NTS
date: 01/01/09

NDS™ WE PUT WATER IN ITS PLACE

TECHNICAL SPECIFICATIONS

12" x 12" CATCH BASIN

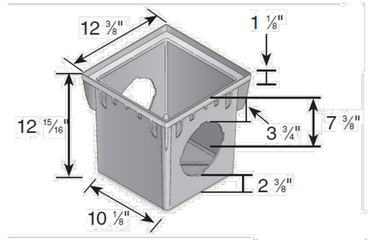

1200BLKIT- Catch basin with 2 openings
1200- Catch basin with two openings
1203- Catch basin with 3 openings
1204- Catch basin with 4 openings

Material: Polypropylene
Colors: Black (1200BLKIT, 1200, 1203,1204)
Fits: Requires either part # 1206, #1242, # 1243, #1245, #1266, or # 1889 Universal Outlet for each opening.
Bottom cutout may be used for additional outlet.

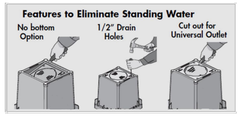

851 N. Harvard Avenue
Lindsay, CA 93247
800-726-1994

Visit ndspro.com for specs, detail drawings, and case studies

NDS WE PUT WATER IN ITS PLACE

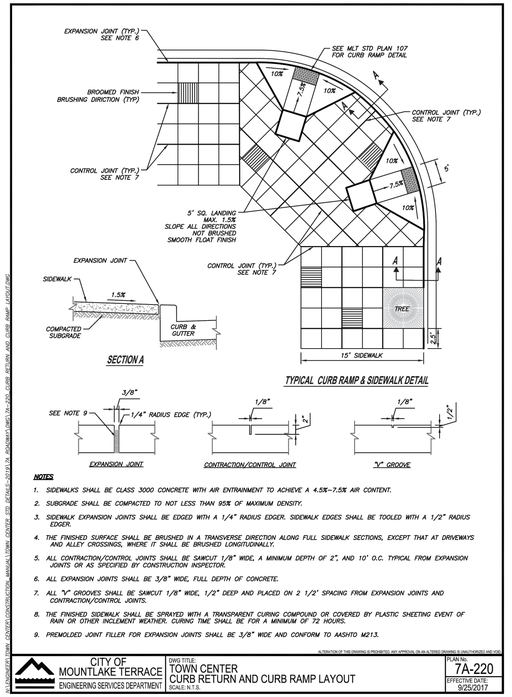

NOTES
1. SIDEWALKS SHALL BE CLASS 3000 CONCRETE WITH AIR ENTRAINMENT TO ACHIEVE A 4.5%–7.5% AIR CONTENT.
2. SUBGRADE SHALL BE COMPACTED TO NOT LESS THAN 95% OF MAXIMUM DENSITY.
3. SIDEWALK EXPANSION JOINTS SHALL BE EDGED WITH A 1/4" RADIUS EDGER. SIDEWALK EDGES SHALL BE TOOLED WITH A 1/2" RADIUS EDGER.
4. THE FINISHED SURFACE SHALL BE BRUSHED IN A TRANSVERSE DIRECTION ALONG FULL SIDEWALK SECTIONS, EXCEPT THAT AT DRIVEWAYS AND ALLEY CROSSINGS, WHERE IT SHALL BE BRUSHED LONGITUDINALLY.
5. ALL CONTRACTION/CONTROL JOINTS SHALL BE SAWCUT 1/8" WIDE, A MINIMUM DEPTH OF 2", AND 10' O.C. TYPICAL FROM EXPANSION JOINTS OR AS SPECIFIED BY CONSTRUCTION INSPECTOR.
6. ALL EXPANSION JOINTS SHALL BE 3/8" WIDE, FULL DEPTH OF CONCRETE.
7. ALL "V" GROOVES SHALL BE SAWCUT 1/8" WIDE, 1/2" DEEP AND PLACED ON 2 1/2' SPACING FROM EXPANSION JOINTS AND CONTRACTION/CONTROL JOINTS.
8. THE FINISHED SIDEWALK SHALL BE SPRAYED WITH A TRANSPARENT CURING COMPOUND OR COVERED BY PLASTIC SHEETING EVENT OF RAIN OR OTHER INCLEMENT WEATHER. CURING TIME SHALL BE FOR A MINIMUM OF 72 HOURS.
9. PREMOLDED JOINT FILLER FOR EXPANSION JOINTS SHALL BE 3/8" WIDE AND CONFORM TO AASHTO M213.

ALTERATION OF THIS DRAWING IS PROHIBITED. ANY APPROVAL OR ALTERED DRAWING IS UNAUTHORIZED AND VOID

CITY OF MOUNTLAKE TERRACE
ENGINEERING SERVICES DEPARTMENT
DWG TITLE: TOWN CENTER CURB RETURN AND CURB RAMP LAYOUT
SCALE: N.T.S.
PLAN No. 7A-220
EFFECTIVE DATE: 9/25/2017

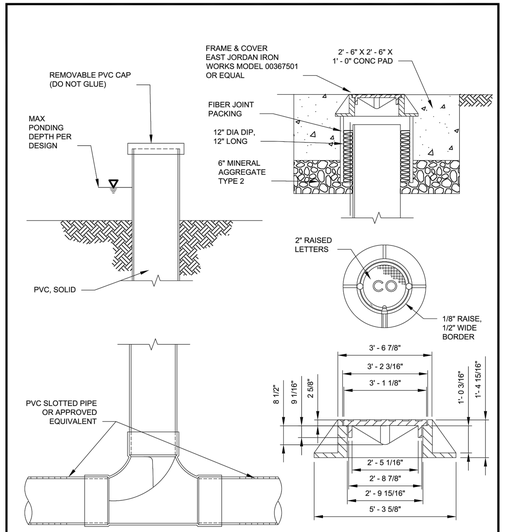

APPROVED BY: Richard Meredith, PE, PTOE

ALTERATION OF THIS DRAWING IS PROHIBITED. ANY APPROVAL OR ALTERED DRAWING IS UNAUTHORIZED AND VOID

CITY OF MOUNTLAKE TERRACE
ENGINEERING SERVICES DEPARTMENT
D&S DRAWING TITLE: BIORETENTION CLEANOUT
SCALE: N.T.S.
D&S Drawing No. 442
EFFECTIVE DATE: JUNE, 2024

NO.	REVISION COMMENTS	BY	REVIEW	DATE

DESIGNER | DRAWN BY | CHECKED BY

NICO M. VANDERHORST — STATE OF WASHINGTON — 30792 — REGISTERED PROFESSIONAL ENGINEER — 3/11/26

ANNA LY — STATE OF WASHINGTON — 53100 — REGISTERED PROFESSIONAL ENGINEER — 03/18/26

DRAWN BY: FERN LIDDELL

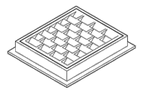

FRAME AND VANED GRATE

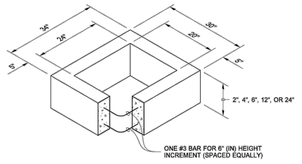

RECTANGULAR ADJUSTMENT SECTION

PIPE ALLOWANCES	
PIPE MATERIAL	MAXIMUM INSIDE DIAMETER (INCHES)
REINFORCED OR PLAIN CONCRETE	12"
ALL METAL PIPE	15"
CPSSP ★ (STD. SPEC. SECT. 9-05.20)	12"
SOLID WALL PVC (STD. SPEC. SECT. 9-05.12(1))	15"
PROFILE WALL PVC (STD. SPEC. SECT. 9-05.12(2))	15"

★ CORRUGATED POLYETHYLENE STORM SEWER PIPE

NOTES
1. As acceptable alternatives to the rebar shown in the **PRECAST BASE SECTION**, fibers (placed according to the Standard Specifications), or wire mesh having a minimum area of 0.12 square inches per foot shall be used with the minimum required rebar shown in the **ALTERNATIVE PRECAST BASE SECTION**. Wire mesh shall not be placed in the knockouts.
2. The knockout diameter shall not be greater than 20" (in). Knockouts shall have a wall thickness of 2" (in) minimum to 2.5" (in) maximum. Provide a 1.5" (in) minimum gap between the knockout wall and the outside of the pipe. After the pipe is installed, fill the gap with joint mortar in accordance with **Standard Specification Section 9-04.3**.
3. The maximum depth from the finished grade to the lowest pipe invert shall be 5' (ft).
4. The frame and grate may be installed with the flange down, or integrally cast into the adjustment section with flange up.
5. The Precast Base Section may have a rounded floor, and the walls may be sloped at a rate of 1 : 24 or steeper.
6. The opening shall be measured at the top of the **Precast Base Section**.
7. All pickup holes shall be grouted full after the basin has been placed.

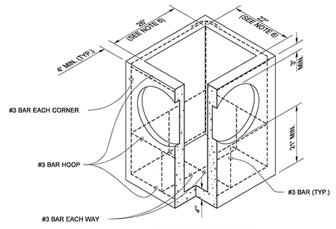

PRECAST BASE SECTION

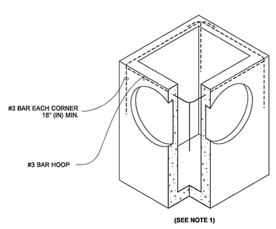

(SEE NOTE 1)
ALTERNATIVE PRECAST BASE SECTION

JULIE HEILMAN — STATE OF WASHINGTON — 20792 — REGISTERED PROFESSIONAL ENGINEER

Julie Heilman
2020.09.01 07:52:50 -07'00'

CATCH BASIN TYPE 1

STANDARD PLAN B-5.20-03

SHEET 1 OF 1 SHEET

APPROVED FOR PUBLICATION
Roark, Steve
Digitally signed by Roark, Steve
Date: 2020.09.09 09:45:23 -07'00'
STATE DESIGN ENGINEER
Washington State Department of Transportation

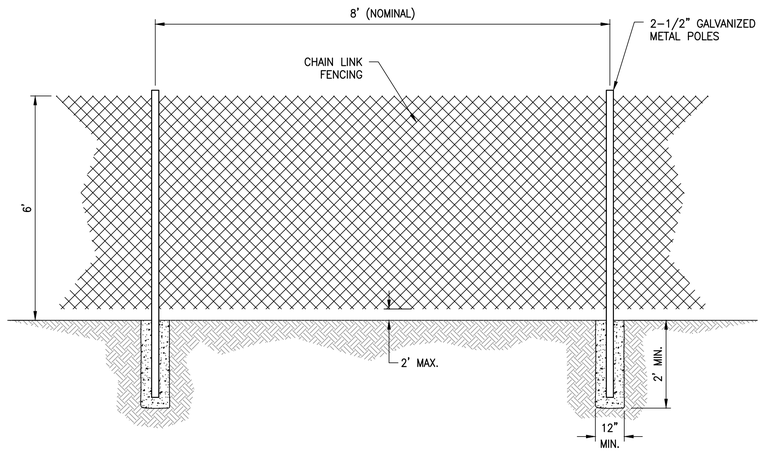

TEMPORARY CONSTRUCTION FENCING (CHAIN LINK)

NTS

SECTION NOTES

1. HMA CLASS 1/2" PG 58H–22 MATCH EX. DEPTH (4" MIN TO 8" MAX).
2. SUBGRADE COMPACTED TO 95% OF MAXIMUM DENSITY PER ASTM D–1557.
3. 4" CRUSHED SURFACING TOP COURSE (COMPACTED TO 95% MAX DENSITY).
4. CEMENT CONCRETE CURB AND GUTTER PER CITY OF MOUNTLAKE TERRACE PLAN NO. 133.
5. 4" CEMENT CONCRETE SIDEWALK, WIDTH AND LOCATION AS SPECIFIED ON PLANS.
6. SAWCUT EXISTING PAVEMENT, LOCATION PER PLAN.
7. MATCH EXISTING ROADWAY CROSS–SLOPE UNLESS OTHERWISE SHOWN ON PLAN.
8. 2" HMA CLASS 1/2" PG 58H–22 OVERLAY.
9. 1–1/2" CRUSHED SURFACING TOP COURSE (COMPACTED TO 95% MAX DENSITY).
10. 4–1/2" CRUSHED SURFACING BASE COURSE (COMPACTED TO 95% MAX DENSITY).

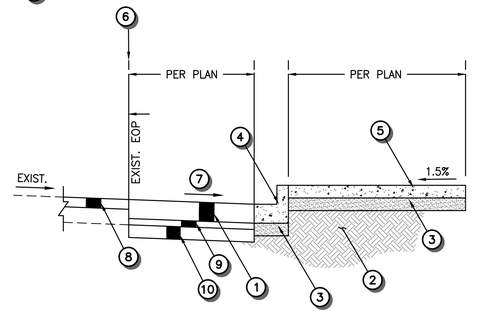

TYPICAL ROADWAY RECONSTRUCTION SECTION

1 NOT TO SCALE

CALL BEFORE YOU DIG 1–800–424–5555

CITY OF MOUNTLAKE TERRACE
TRANSIT CONNECTION CORRIDOR
SITE DETAILS AND STANDARD PLANS

TITLE

Otak

32809
PROJECT NUMBER

C06
DRAWING NO.

SHEET 10 OF 31

© 2026 OTAK, INC.

Plotted: Mar 18, 2026 – 10:49am O:\PROJECT\32800\32809\CADD\ACAD\Dwg\C06.dwg Layout Name: C06

XREF LIST
32809_TBK
BASEMAP_(012-2019)
XL300-N19-CRP100
X32809-LANDSCAPE PLAN
X32809-PAVING
X14384-SITE
X32809-SITE PLAN
C32809_N060
S20757B191
SV-CC-CMLT0006
ALSEAL_WA

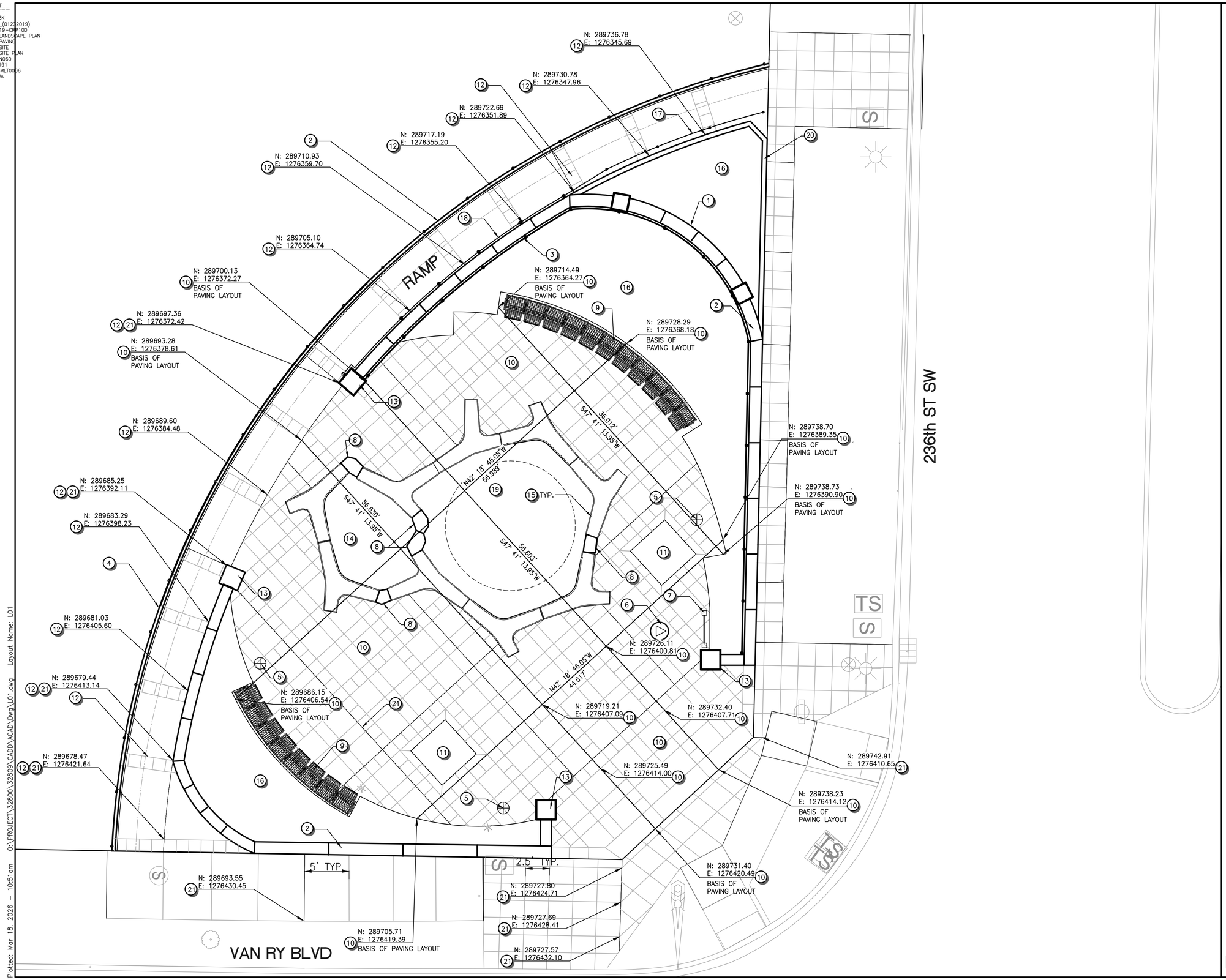

CONSTRUCTION NOTES

1. MOUNTLAKE TERRACE PLAZA SIGN, SEE SHEET L07
2. RETAINING WALL, SEE SHEET S01–S03
3. RAILING TYPE 1, SEE SHEET S07
4. RAILING TYPE 2, SEE SHEET S07
5. PEDESTRIAN LIGHTING, SEE SHEET IL01
6. BRONZE PLATE INLAY, SEE SHEET L06
7. WAYFINDING SIGN, SEE SHEET L05
8. GRANITE FILLER BLOCK, SEE SHEET L05
9. ARC BENCH, SEE SHEET L05
10. CEMENT CONCRETE PLAZA PAVING, SEE DETAILS ON SHEET C02 AND L04
11. TREE PLANTING WITH TREE GRATE, SEE SHEET L06
12. CEMENT CONCRETE RAMP (MOMENT SLAB) PAVING, SEE DTLS ON SHEET C02 & L04
13. CONCRETE COLUMNS W/ GRANITE TOP, SEE SHEET S05
14. SEE SHEET L02 FOR CENTER ISLAND PLANTING PLAN
15. CONCRETE BENCH, BLACK COLOR, SEE SHEET L05
16. EVERGREEN GARDEN PLANTING, SEE DETAIL 1 SHEET L03 FOR SOIL PREPARATION AND PLANTING
17. RAILING TYPE 3, SEE SHEET S08
18. RAILING TYPE 4, SEE SHEET S08
19. CENTER ISLAND DECORATIVE ROCK, SEE SHEET L02
20. CEMENT CONCRETE PEDESTRIAN CURB
21. ISOLATION JOINT, SEE SHEET L04

GENERAL NOTES

1. ALIGN NEW SIDEWALK SCORING AND JOINTS WITH EXISTING 236TH ST SIDEWALK SCORING AND JOINTS AS SEEN ON PLANS.

HORZ 5 0 5 10
SCALE IN FEET

CALL BEFORE YOU DIG 1-800-424-5555

NO.	REVISION COMMENTS	BY	REVIEW	DATE

DESIGNER | DRAWN BY | CHECKED BY

STATE OF WASHINGTON
LINDSAY MARTIN
NO. 1580 EXP. 06/13/2027
LICENSED LANDSCAPE ARCHITECT
03/18/2026

CITY OF MOUNTLAKE TERRACE
TRANSIT CONNECTION CORRIDOR
PLAZA PLAN

TITLE

Otak

32809
PROJECT NUMBER

L01
DRAWING NO.

SHEET 11 OF 31

© 2026 OTAK, INC.

Plotted: Mar 18, 2026 – 10:51am O:\PROJECT\32800\32809\CADD\ACAD\Dwg\L01.dwg Layout Name: L01

XREF LIST
32809_TBK
CIVIL WALLS EXPORT
X14384-SITE
X32809-SITE PLAN
XL300-L90-UCP300
XL300-N19-CMP100
X32809-LANDSCAPE PLAN
SV-CC-CMLT0006
ALSEAL_WA
TERRACE STATION-031119_2013

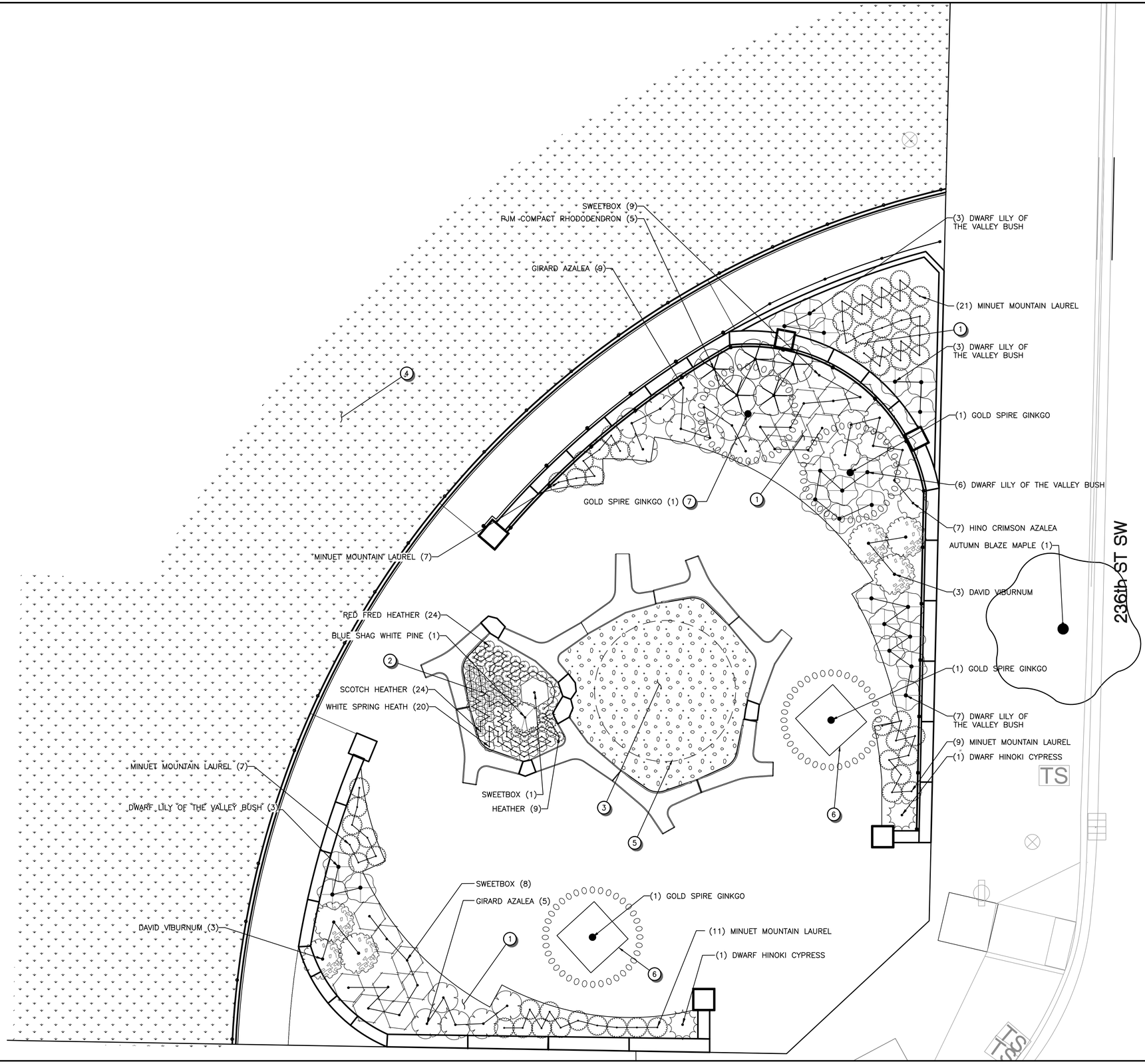

CONSTRUCTION NOTES

1. EVERGREEN GARDEN PLANTING – SEE SHEET L03 FOR SOIL PREPARATION AND PLANTING
2. CENTER ISLAND PLANTING – SEE SHEET L03 FOR SOIL PREPARATION AND PLANTING
3. CENTER ISLAND DECORATIVE ROCK – SEE SHEET L03
4. TCE AREA RESTORATION – SEE SPECIFICATION SECTION 8-02.3 (17)
5. CONCRETE SCULPTURE FOUNDATION – SEE SHEET L03
6. TREE PLANTING WITH TREE GRATE – SEE SHEET L06
7. TREE PLANTING – SEE SHEET L03

GENERAL NOTES

1. SEE SHEET L03 FOR FULL PLANTING SCHEDULE

HORZ SCALE 5 0 5 10 IN FEET

CALL BEFORE YOU DIG 1-800-424-5555

NO.	REVISION COMMENTS	BY	REVIEW	DATE

DESIGNER
DRAWN BY
CHECKED BY

STATE OF WASHINGTON · LINDSAY MARTZ · 20158 · LICENSED LANDSCAPE ARCHITECT · EXP. 06/13/2027
03/18/2026

CITY OF MOUNTLAKE TERRACE
TRANSIT CONNECTION CORRIDOR
PLAZA PLANTING PLAN

TITLE

Otak

32809
PROJECT NUMBER

L02
DRAWING NO.

SHEET 12 OF 31

© 2026 OTAK, INC.

Plotted: Mar 18, 2026 - 10:52am O:\PROJECT\32800\32809\CADD\ACAD\Dwg\L02.dwg Layout Name: L02

XREF LIST
32809_TBK
X32809-LANDSCAPE PLAN
ALSEAL_WA

PLANT SCHEDULE

TREES	BOTANICAL / COMMON NAME	CAL
4	GINKGO BILOBA 'BLAGON' / GOLD SPIRE GINKGO	2.5"
1	ACER X FREEMANII 'JEFFERSRED' / AUTUMN BLAZE MAPLE	2.5"
SHRUBS	**BOTANICAL / COMMON NAME**	**CONT**
14	AZALEA GIRARD HYBRID 'GIRARD'S FUCHSIA' / GIRARD AZALEA	2 GAL
7	AZALEA X 'HINO CRIMSON' / HINO CRIMSON AZALEA	2 GAL
24	CALLUNA VULGARIS 'RED FRED' / RED FRED HEATHER	1 GAL
24	CALLUNA VULGARIS 'SPRING TORCH' / SCOTCH HEATHER	1 GAL
9	CALLUNA VULGARIS 'YELLOW BEAUTY' / HEATHER	1 GAL
2	CHAMAECYPARIS OBTUSA 'NANA GRACILIS' / DWARF HINOKI CYPRESS	3 GAL
20	ERICA CARNEA 'SPRINGWOOD WHITE' / WHITE SPRING HEATH	1 GAL
55	KALMIA LATIFOLIA 'MINUET' / MINUET MOUNTAIN LAUREL	2 GAL
22	PIERIS JAPONICA 'CAVATINE' / DWARF LILY OF THE VALLEY BUSH	2 GAL
1	PINUS STROBUS 'BLUE SHAG' / BLUE SHAG WHITE PINE	5 GAL
5	RHODODENDRON X 'PJM COMPACTA' / PJM COMPACT RHODODENDRON	5 GAL.
18	SARCOCOCCA CONFUSA / SWEETBOX	2 GAL
6	VIBURNUM DAVIDII / DAVID VIBURNUM	2 GAL

GROUND COVERS	BOTANICAL / COMMON NAME	CONT
261 SF	DECORATIVE ROCK	N/A

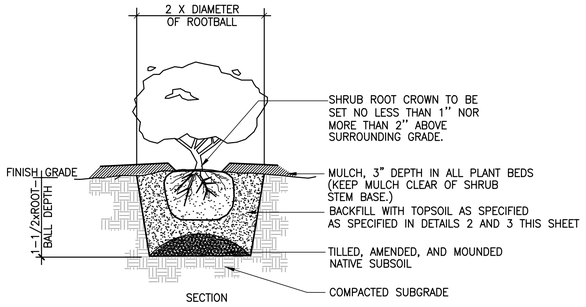

1 L03 SHRUB PLANTING DETAIL

NOT TO SCALE

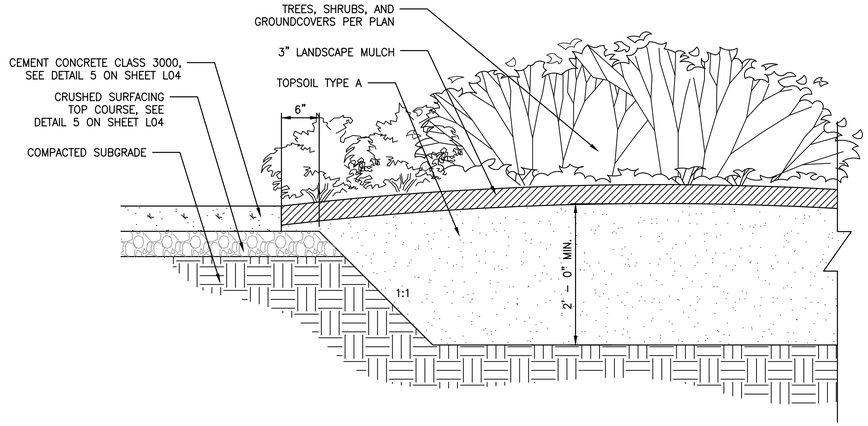

2 L03 EVERGREEN GARDEN PLANTING

NOT TO SCALE

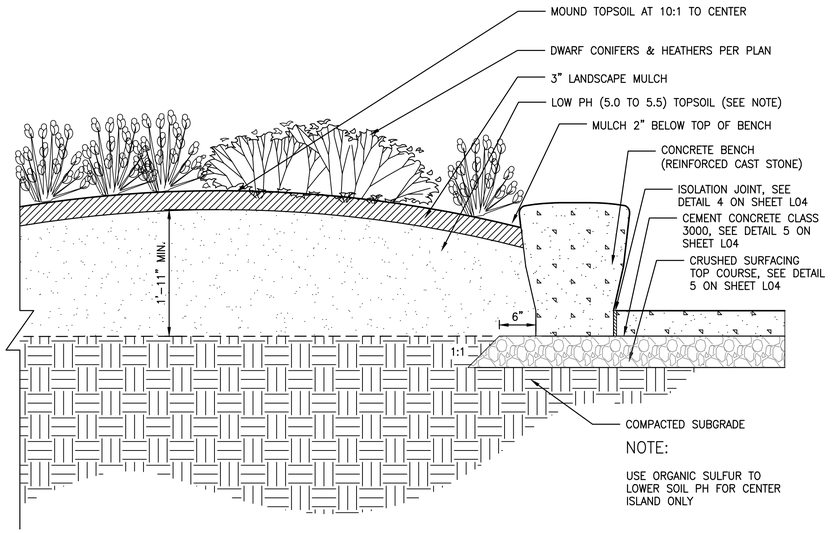

3 L03 CENTER ISLAND PLANTING

NOT TO SCALE

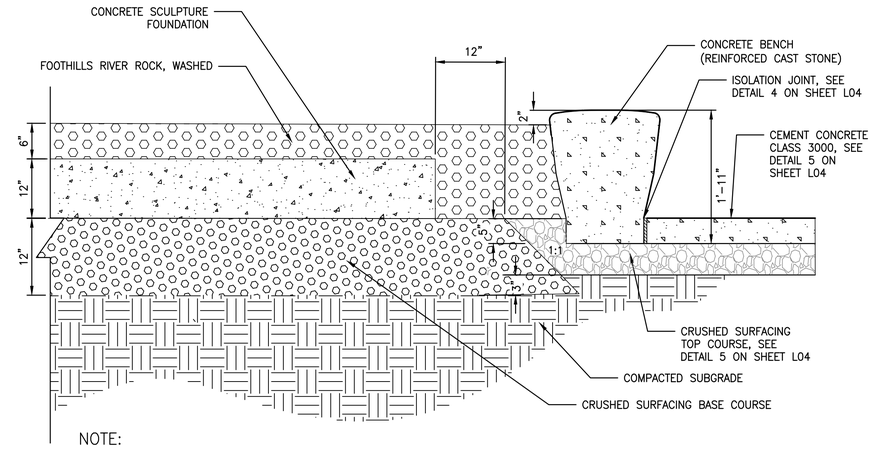

4 L03 CENTER ISLAND DECORATIVE ROCK

NOT TO SCALE

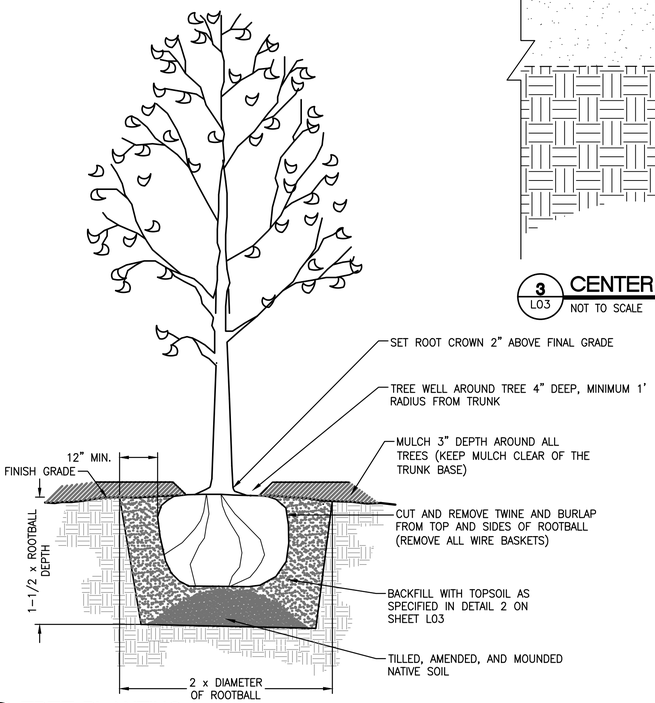

5 L03 TREE PLANTING

NOT TO SCALE

CALL BEFORE YOU DIG 1-800-424-5555

NO.	REVISION COMMENTS	BY	REVIEW	DATE

DESIGNER

DRAWN BY

CHECKED BY

STATE OF WASHINGTON
LINDSAY MARTZ
20158
EXP. 06/13/2027
LICENSED LANDSCAPE ARCHITECT
03/18/2026

CITY OF MOUNTLAKE TERRACE
TRANSIT CONNECTION CORRIDOR
PLANTING DETAILS

TITLE

Otak

32809
PROJECT NUMBER

L03
DRAWING NO.

SHEET 13 OF 31

© 2026 OTAK, INC.

Plotted: Mar 18, 2026 - 10:52am O:\PROJECT\32800\32809\CADD\ACAD\Dwg\L03.dwg Layout Name: L03

XREF LIST
32809_TBK
X32809-PAVING
X32809-SITE PLAN
C32809_NO60
ALSEAL_WA
SV-CC-CMLT0006

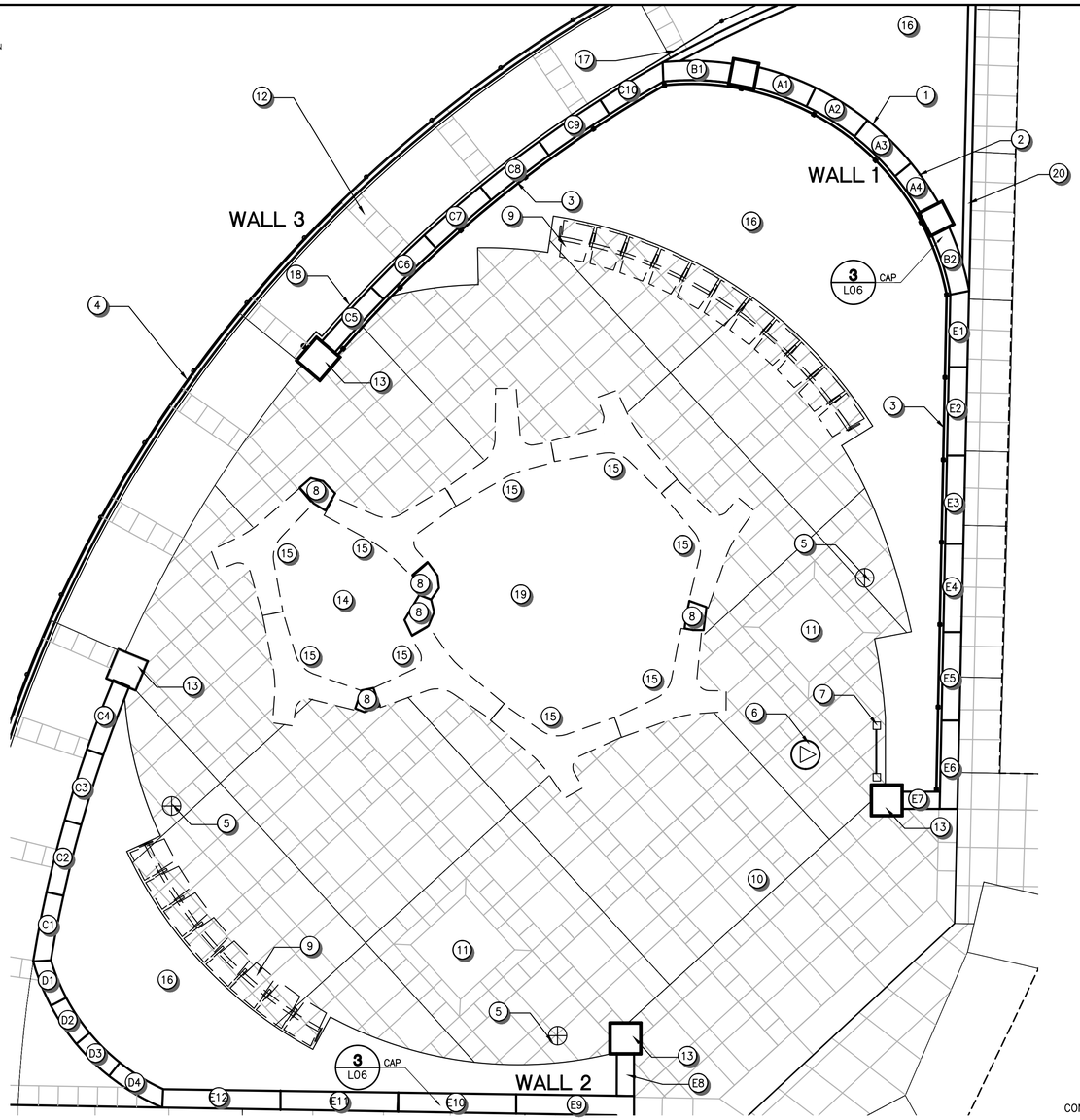

CONSTRUCTION NOTES

1. MOUNTLAKE TERRACE PLAZA SIGN, SEE SHEET L07
2. RETAINING WALL, SEE SHEET S01–S03
3. RAILING TYPE 1, SEE SHEET S07
4. RAILING TYPE 2, SEE SHEET S07
5. PEDESTRIAN LIGHTING, SEE SHEET IL01
6. BRONZE PLATE INLAY, SEE SHEET L06
7. WAYFINDING SIGN, SEE SHEET L05
8. GRANITE FILLER BLOCK, SEE SHEET L05
9. ARC BENCH, SEE SHEET L05
10. CEMENT CONCRETE PLAZA PAVING, SEE DETAILS ON SHEET C02 AND L04
11. TREE PLANTING WITH TREE GRATE, SEE SHEET L06
12. CEMENT CONCRETE RAMP (MOMENT SLAB) PAVING, SEE DTLS ON SHEET C02 & L04
13. CONCRETE COLUMNS W/ GRANITE TOP, SEE SHEET S05
14. SEE SHEET L02 FOR CENTER ISLAND PLANTING PLAN
15. CONCRETE BENCH, BLACK COLOR, SEE SHEET L05
16. EVERGREEN GARDEN PLANTING, SEE DETAIL 1 SHEET L03 FOR SOIL PREPARATION AND PLANTING
17. RAILING TYPE 3, SEE SHEET S08
18. RAILING TYPE 4, SEE SHEET S08
19. CENTER ISLAND DECORATIVE ROCK, SEE SHEET L02
20. CEMENT CONCRETE PEDESTRIAN CURB

HORZ SCALE: 5 0 5 10 IN FEET

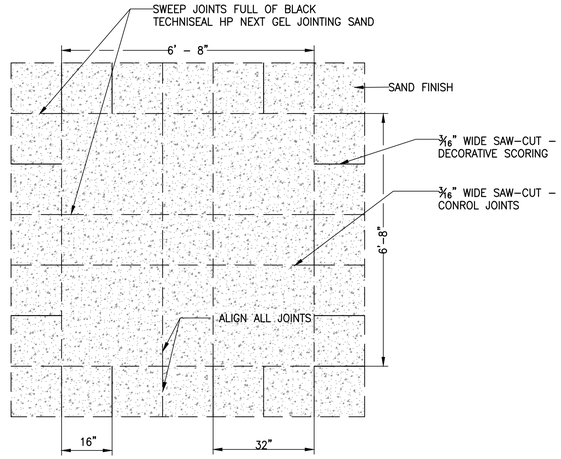

1 L04 CEMENT CONCRETE PLAZA PAVING PATTERN

NOT TO SCALE

NOTE: SEE SHEET L01 FOR ISOLATION JOINT LOCATIONS

2 L04 SAND FINISH TEXTURE

NOT TO SCALE

NOTE: COLOR WILL DIFFER FROM PHOTO

NOTE:
1) USE DAYTON SUPERIOR TOP-CAST 05 RETARDER ON ALL CIP CONC. PAVING.
2) SAND FINISH MIX SHALL USE WHITE CEMENT AND HAVE LARGE AGGREGATE PUSHED DOWN FROM 1/2" WITH JITTERBUG. SAND FINISH ACHIEVED BY LIGHT PRESSURE WASHING.

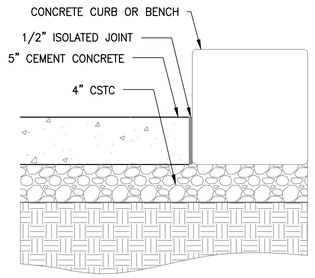

3 L04 ISOLATION JOINT

NOT TO SCALE

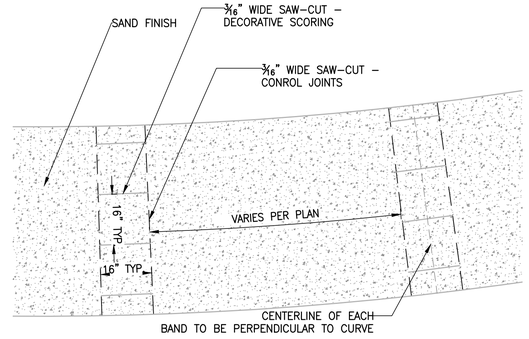

4 L04 CEMENT CONCRETE RAMP (MOMENT SLAB) PAVING PATTERN

NOT TO SCALE

NOTE: SEE SHEET L01 FOR ISOLATION JOINT LOCATIONS

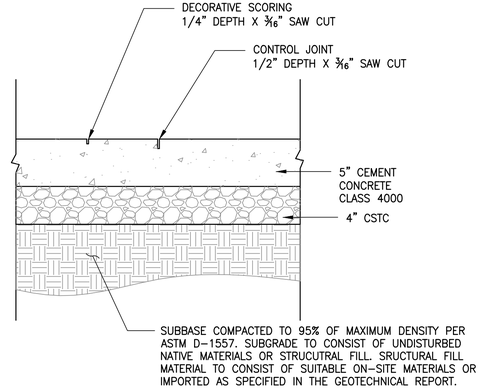

5 L04 CEMENT CONCRETE PLAZA PAVING SECTION AND JOINTING DETAIL

NOT TO SCALE

CALL BEFORE YOU DIG 1-800-424-5555

NO.	REVISION COMMENTS	BY	REVIEW	DATE

DESIGNER | DRAWN BY | CHECKED BY

STATE OF WASHINGTON · LINDSAY MARTZ · 20158 · EXP 06/13/2027 · LICENSED LANDSCAPE ARCHITECT

03/18/2026

CITY OF MOUNTLAKE TERRACE
TRANSIT CONNECTION CORRIDOR
PLAZA SITE PLAN

TITLE

Otak

32809
PROJECT NUMBER

L04
DRAWING NO.

SHEET 14 OF 31

© 2026 OTAK, INC.

Plotted: Mar 18, 2026 - 10:53am O:\PROJECT\32800\32809\CADD\ACAD\Dwg\L04.dwg Layout Name: L04

XREF LIST
32809_TBK
ALSEAL_WA

NOTES:
1. APPLY CONCRETE SEALANT TO PROTECT AND WATERPROOF CONCRETE BENCH.
2. USE ELASTOMERIC CAULK IN BETWEEN ALL CONCRETE BENCHES AND GRANITE FILLER BLOCKS ON PLANTER SIDE OF BENCHES AND BLOCKS. MATCH CAULK COLOR TO BENCHES

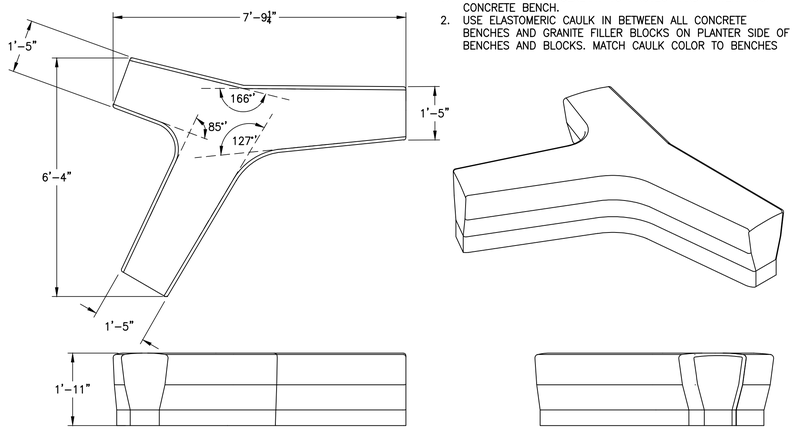

1 L05 CONCRETE BENCH
NOT TO SCALE

UPRIGHT SINGLE BULLETIN CASE

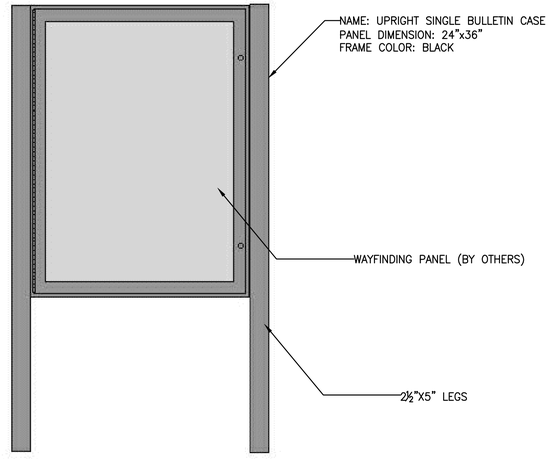

DECK/SURFACE MOUNT

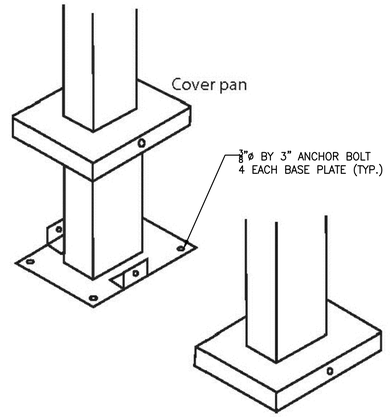

4 L05 WAYFINDING SIGN
NOT TO SCALE

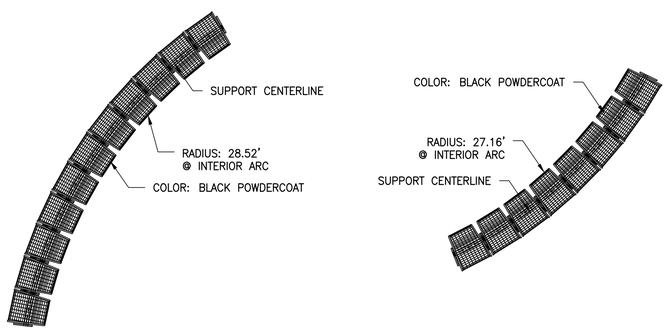

2 L05 ARC BENCH - PLAN
NOT TO SCALE

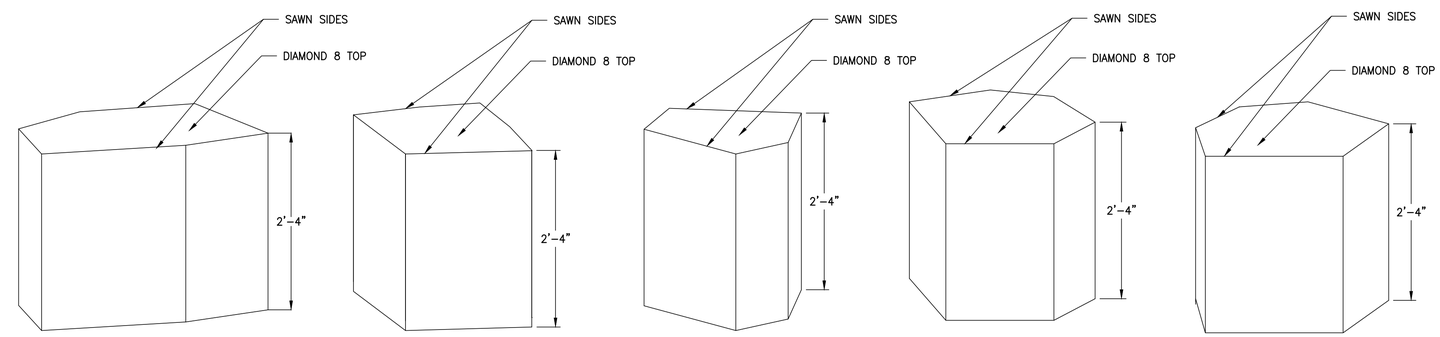

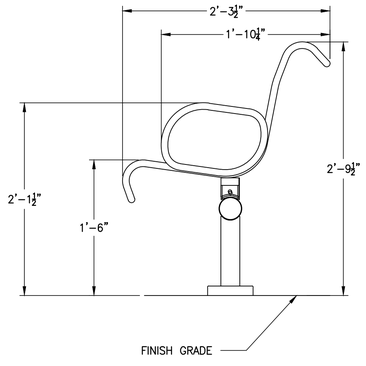

3 L05 ARC BENCH - ELEVATION
NOT TO SCALE

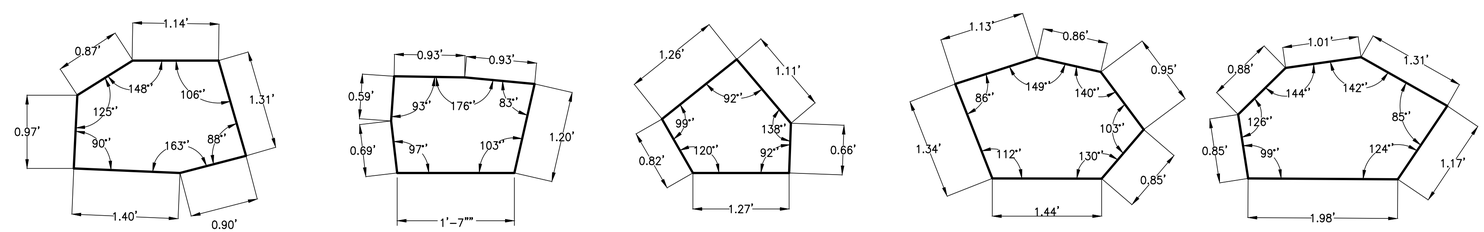

5 L05 GRANITE FILLER BLOCKS
ALL ACADEMY BLACK

CALL BEFORE YOU DIG 1-800-424-5555

NO.	REVISION COMMENTS	BY	REVIEW	DATE

DESIGNER | DRAWN BY | CHECKED BY

STATE OF WASHINGTON
LINDSAY MARTIN
NO. 1580 EXP. 06/13/2027
LICENSED LANDSCAPE ARCHITECT
03/18/2026

CITY OF MOUNTLAKE TERRACE
TRANSIT CONNECTION CORRIDOR
FURNISHING DETAILS

TITLE
Otak

32809
PROJECT NUMBER
L05
DRAWING NO.
SHEET 15 OF 31

© 2026 OTAK, INC.

Plotted: Mar 18, 2026 - 10:55am O:\PROJECT\32800\32809\CADD\ACAD\Dwg\L05.dwg Layout Name: L05

XREF_LIST
32809_TBK
ALSEAL_WA

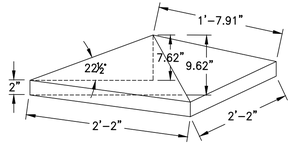

1 L06 GRANITE WALL COLUMN CAP (QTY 4)

DIAMOND 8 FINISH
ACADEMY BLACK

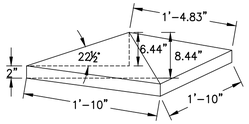

2 L06 GRANITE SIGN COLUMN CAP (QTY 2)

DIAMOND 8 FINISH
ACADEMY BLACK

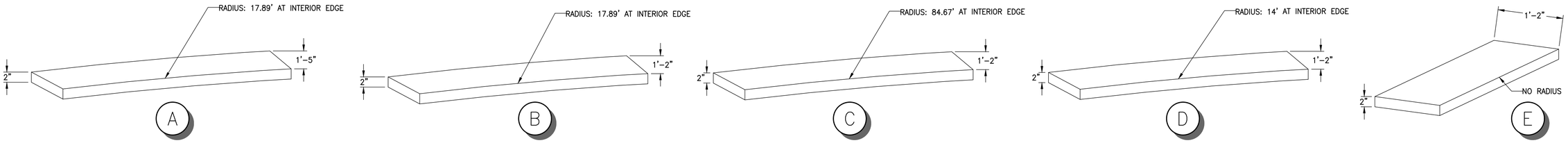

3 L06 GRANITE WALL CAP

THERMAL TOP, SPLIT SIDES
ALL ACADEMY BLACK

NOTES:
1. FOR SUGGESTED SEGMENT CUTS SEE SHEET L04 AND GRANITE WALL CAP INVENTORY TABLE ON SHEET L06.
2. ESTIMATED MEASUREMENTS FOR SEGMENT CUTS ARE SUGGESTIONS ONLY. ACTUAL SIZES OF GRANITE CAP SEGMENTS SHOULD BE CONFIRMED BY CONTRACTOR PRIOR TO FABRICATION.

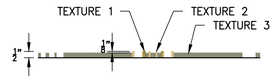

TEXTURE 1: EMBOSSED SAND FINISH
TEXTURE 2: EMBOSSED FINE AGGREGATE FINISH
TEXTURE 3: POLISHED FINISH AND SLIGHTLY RECESSED

A L06 BRONZE PLATE INLAY SECTION

NOT TO SCALE

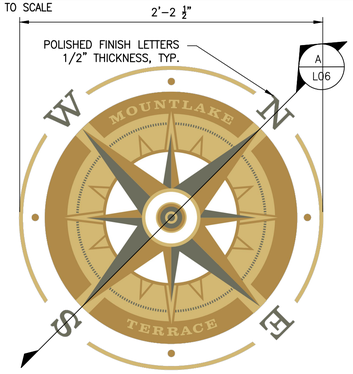

NOTES:
1. INLAY WITH NORTH POINTING TRUE NORTH
2. BRONZE CAST ½" THICK PLATE WITH BACKING
3. 4 HOOKS BRAISED TO BACK OF PLATE
4. ARTWORK TO BE PROVIDED BY MLT

4 L06 BRONZE PLATE INLAY

NOT TO SCALE

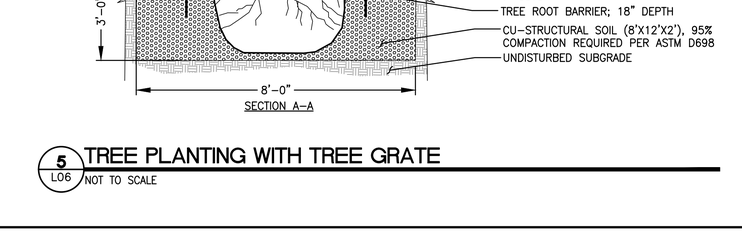

TREE GRATE ALONG 236TH ST NORTH OF PROJECT SITE

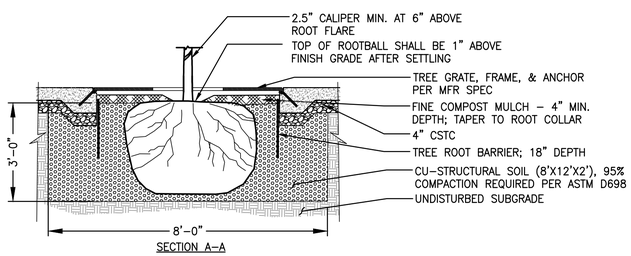

5 L06 TREE PLANTING WITH TREE GRATE

NOT TO SCALE

GRANITE WALL CAP INVENTORY TABLE

WALL CAP SEGMENT	WALL	RADIUS (INTERIOR EDGE)	LENGTH (INTERIOR EDGE)	WIDTH	HEIGHT
A1	1	17.89'	3' – 9.8"	1' – 5"	2"
A2	1	17.89'	3' – 10.2"	1' – 5"	2"
A3	1	17.89'	3' – 10.2"	1' – 5"	2"
A4	1	17.89'	3' – 0.5"	1' – 5"	2"
B1	1	17.89'	4' – 6.1"	1' – 2"	2"
B2	1	17.89'	4' – 3.1"	1' – 2"	2"
C1	2	84.67'	4' – 5.6"	1' – 2"	2"
C2	2	84.67'	4' – 11.6"	1' – 2"	2"
C3	2	84.67'	4' – 11.6"	1' – 2"	2"
C4	2	84.67'	4' – 11.6"	1' – 2"	2"
C5	1	84.67'	4' – 11.6"	1' – 2"	2"
C6	1	84.67'	4' – 11.6"	1' – 2"	2"
C7	1	84.67'	4' – 11.6"	1' – 2"	2"
C8	1	84.67'	4' – 11.6"	1' – 2"	2"
C9	1	84.67'	4' – 11.6"	1' – 2"	2"
C10	1	84.67'	4' – 3.3"	1' – 2"	2"
D1	2	14'	2' – 9"	1' – 2"	2"
D2	2	14'	2' – 10.6"	1' – 2"	2"
D3	2	14'	2' – 10.6"	1' – 2"	2"
D4	2	14'	3' – 5.6"	1' – 2"	2"
E1	1	None	4' – 11"	1' – 2"	2"
E2	1	None	6'	1' – 2"	2"
E3	1	None	6'	1' – 2"	2"
E4	1	None	6'	1' – 2"	2"
E5	1	None	6'	1' – 2"	2"
E6	1	None	6'	1' – 2"	2"
E7	1	None	2' – 7.3"	1' – 2"	2"
E8	2	None	2' – 10.7"	1' – 2"	2"
E9	2	None	8'	1' – 2"	2"
E10	2	None	8'	1' – 2"	2"
E11	2	None	8'	1' – 2"	2"
E12	2	None	7' – 11.5"	1' – 2"	2"

NO.	REVISION COMMENTS	BY	REVIEW	DATE

DESIGNER
DRAWN BY
CHECKED BY

STATE OF WASHINGTON · LINDSAY MARIE ZIEZ · NO. 1598 · EXP. 06/13/2027 · LICENSED LANDSCAPE ARCHITECT

03/18/2026

CITY OF MOUNTLAKE TERRACE
TRANSIT CONNECTION CORRIDOR
FURNISHING DETAILS

TITLE

Otak

32809
PROJECT NUMBER

L06
DRAWING NO.

SHEET 16 OF 31

© 2026 OTAK, INC.

CALL BEFORE YOU DIG 1-800-424-5555

Plotted: Mar 18, 2026 – 10:55am O:\PROJECT\32800\32809\CADD\ACAD\Dwg\L06.dwg Layout Name: L06

XREF LIST
32809_TBK
ALSEAL_WA

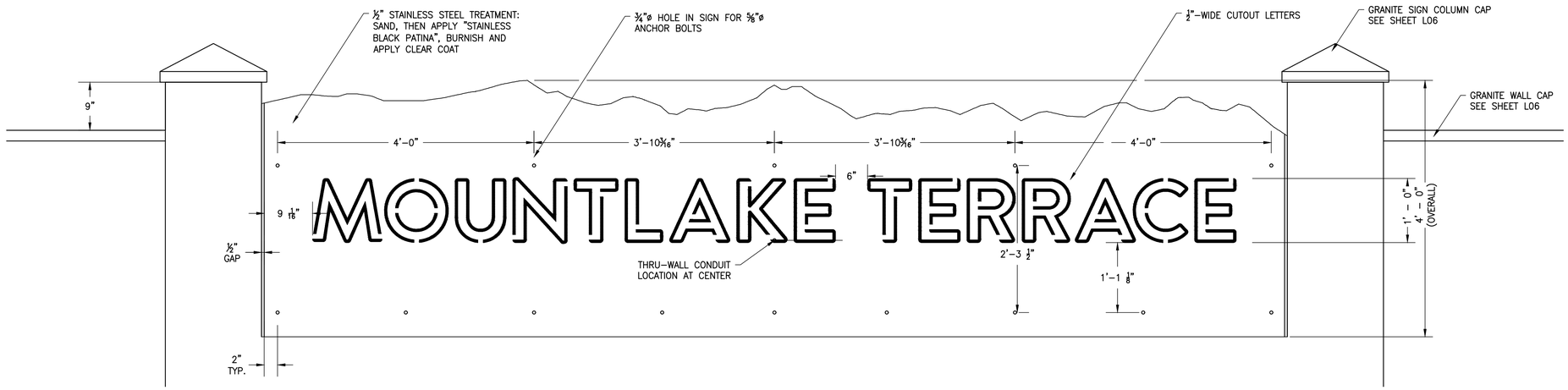

1 L07 **PLAZA SIGN ELEVATION**
NOT TO SCALE

NOTE:

1. ART WORK FOR SIGN TO BE PROVIDED BY CITY OF MOUNTLAKE TERRACE AS DIGITAL FILE.
2. TEST BOND FOR ACRYLIC DIFFUSION SHEET TO STEEL.

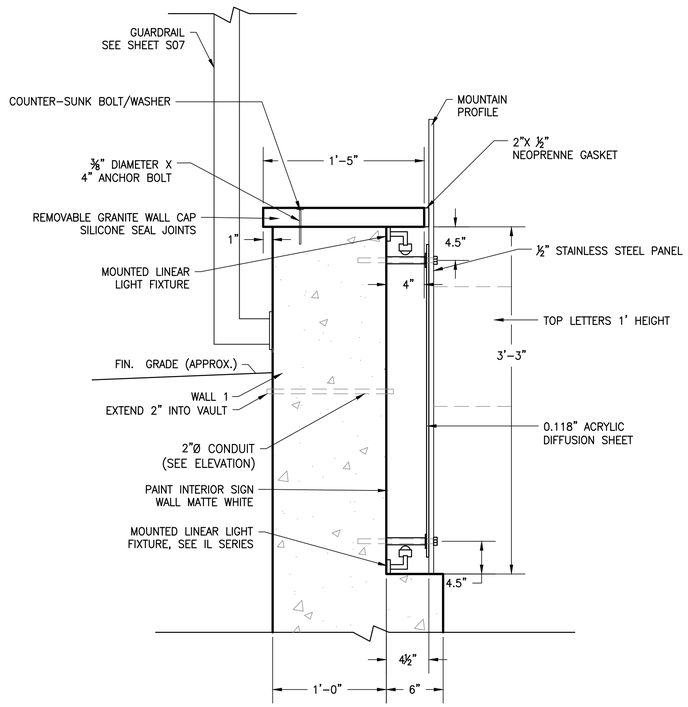

2 L07 **PLAZA SIGN SECTION DETAIL**
NOT TO SCALE

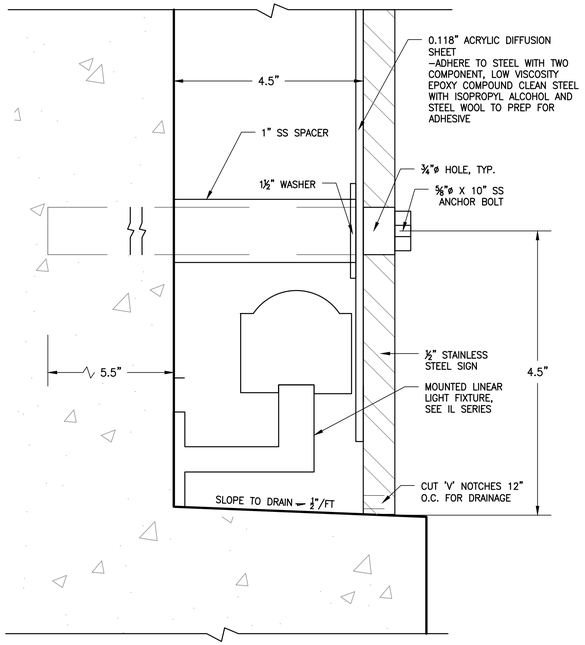

3 L07 **SIGN MOUNTING DETAIL (BOTTOM BOLT SHOWN)**
NOT TO SCALE

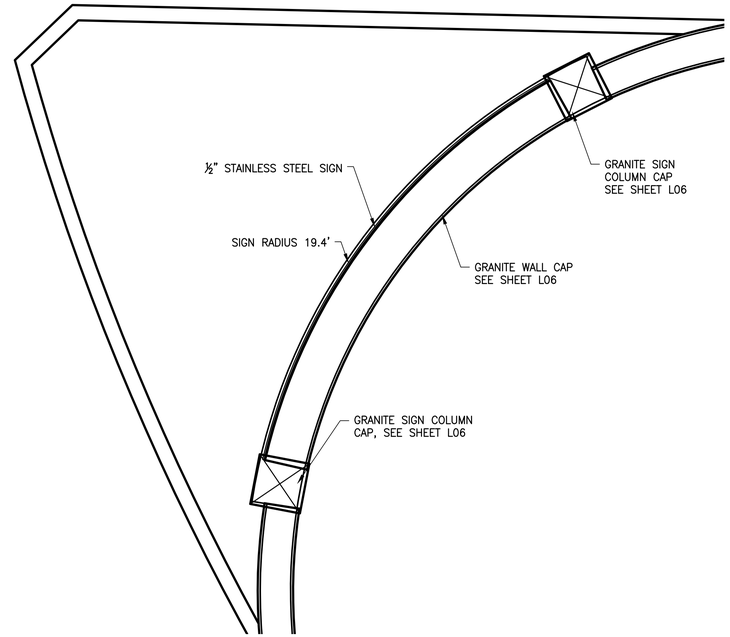

4 L07 **PLAZA SIGN PLAN VIEW**
NOT TO SCALE

CALL BEFORE YOU DIG 1–800–424–5555

NO.	REVISION COMMENTS	BY	REVIEW	DATE

DESIGNER
DRAWN BY
CHECKED BY

STATE OF WASHINGTON · LINDSAY MARTZ · 20158 · LICENSED LANDSCAPE ARCHITECT · EXP. 06/13/2027
03/18/2026

CITY OF MOUNTLAKE TERRACE
TRANSIT CONNECTION CORRIDOR
MOUNTLAKE TERRACE SIGN

TITLE

Otak

32809
PROJECT NUMBER

L07
DRAWING NO.

SHEET 17 OF 31

© 2026 OTAK, INC.

Plotted: Mar 18, 2026 – 10:56am O:\PROJECT\32800\32809\CADD\ACAD\Dwg\L07.dwg Layout Name: L07

XREF LIST
32809_TBK
X32809-PAVING
X32809-SITE PLAN
X32809-IRRIG
X13086PRP-23STH
XL300-N19-CRP100
TERRACE STATION-031119_2013
S20757B191
ALSEAL_WA

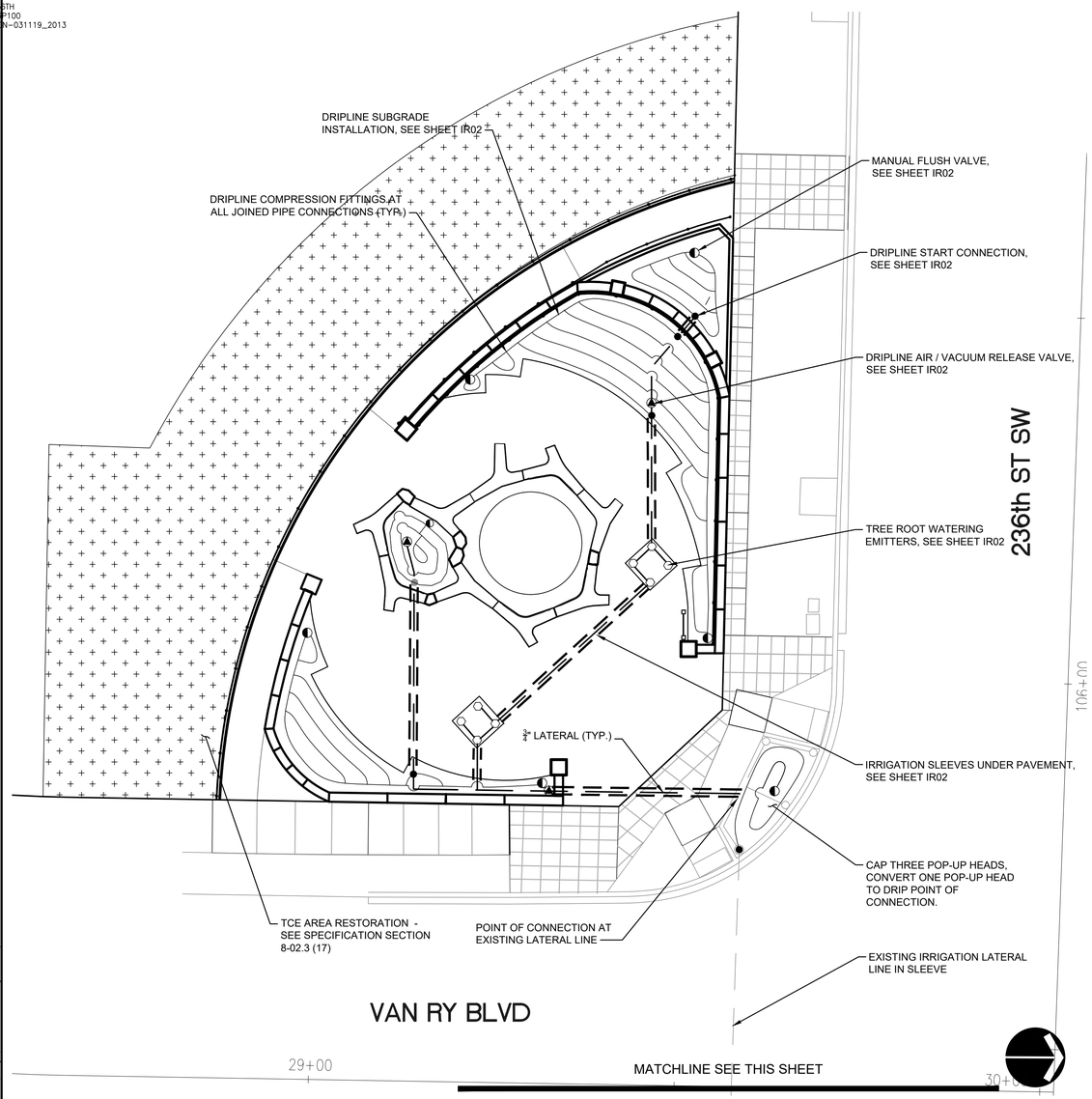

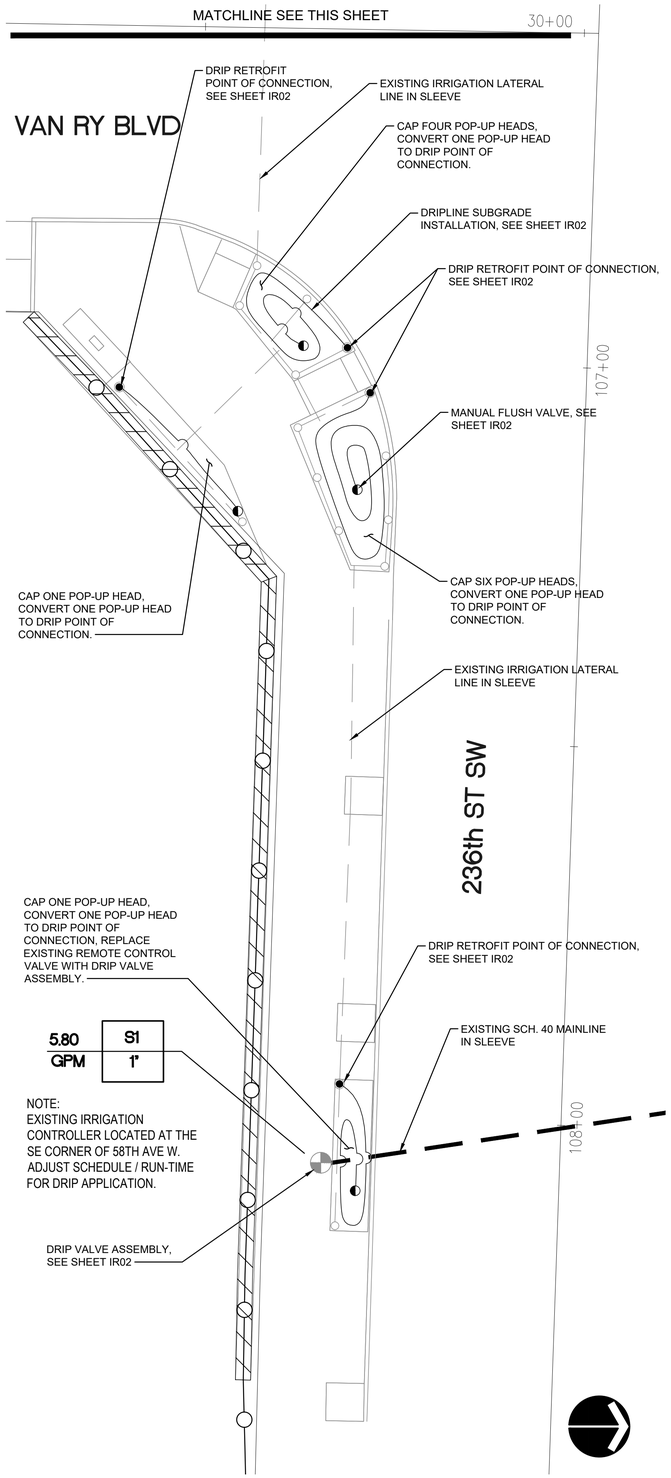

IRRIGATION LEGEND

SYSTEM DESIGN PRESSURE 30 P.S.I MINIMUM

- DRIPLINE AIR / VACCUM RELEASE VALVE
- TREE ROOT WATERING EMITTER (5.0 GPH) ½" FPT THREAD INLET
- DRIPLINE START CONNECTION
- MANUAL FLUSH VALVE
- DRIP RETROFIT CONNECTION
- DRIP VALVE ASSEMBLY
- SCHEDULE 40 IRRIGATION SLEEVE (1–1/2" TYP.)
- EXISTING SCH. 40 LATERAL LINE
- SCH. 40 LATERAL LINE
- DRIPLINE / SUBGRADE INSTALLATION (0.6 GPH EMITTERS @ 18" O.C.)

CONTROL VALVE FLAG

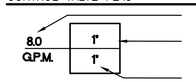

SCH. 40 PVC PIPE SIZING CHART

0–8 GPM	–	3/4"
8–12 GPM	–	1"
12–22 GPM	–	1–1/4"
22–30 GPM	–	1–1/2"
30–50 GPM	–	2"

NOTE:
PIPES ARE TO BE SIZED ACCORDING TO G.P.M. (GALLONS PER MINUTE) DEMAND DOWN LINE.

FLOW VELOCITIES ARE NOT TO EXCEED 5' PER SECOND.

IRRIGATION NOTES

1. NEW IRRIGATION SYSTEM INVOLVES CONVERTING EXISTING SHRUB / SPRAY SYSTEM TO A DRIP IRRIGATION SYSTEM.
2. EXISTING SYSTEM WILL BE EXPANDED TO IRRIGATE PLAZA PLANTING.
3. CONTRACTOR TO VERIFY STATIC WATER PRESSURE AT P.O.C. MEETS OR EXCEEDS DESIGN WATER PRESSURE OF 30 P.S.I PRIOR TO BEGINNING WORK.
4. IRRIGATION SYSTEM SHALL DELIVER WATER TO ALL NEW PLANTS PRIOR TO ACCEPTANCE FOR PHYSICAL COMPLETION. MINOR ADJUSTMENT TO DRIPLINE LAYOUT IS ACCEPTABLE. IRRIGATION SYSTEM SHALL BE OPERATIONAL PRIOR PLANT INSTALLATION IF PLANTING IS TO OCCUR BETWEEN APRIL AND OCTOBER.
5. DRAWING IS DIAGRAMMATIC. MAINLINE, AND OTHER MATERIALS SHOWN OUTSIDE OF PLANTING AREAS FOR GRAPHIC CLARITY ONLY. PLACE IRRIGATION EQUIPMENT, EXCEPT SLEEVES, WITHIN PLANTING AREAS. PLACE EQUIPMENT BOXES AT LEAST 12" FROM PAVEMENT EDGE. ALIGN VALVE BOXES SO THAT THEY ARE SQUARE WITH EACH OTHER AND PARALLEL TO EDGE OF NEAREST PAVEMENT EDGE, CURB OR BUILDING.
6. CONTRACTOR SHALL PLACE DRIP IRRIGATION FLUSH VALVES AND AIR RELIEF VALVES IN VERIFIED HIGH AND LOW SPOTS, SYMBOLS ON PLAN ARE SHOWN SCHEMATICALLY.
7. IRRIGATION CONTRACTOR SHALL ENSURE THAT THIS SYSTEM MEETS ALL LOCAL AND STATE LAWS INCLUDING BUT NOT LIMITED TO BACKFLOW PREVENTION DEVICE, ELECTRICAL AND PLUMBING REQUIREMENTS.
8. SLEEVE LOCATIONS SHOWN ARE ESTIMATES. ALL LATERALS AND MAINLINE PLACED UNDER PAVEMENT SHALL BE SLEEVED TO ALLOW FOR PIPE REPLACEMENT. MARK ENDS OF SLEEVE WITH 18" LONG, ¼" REBAR.
9. EXISTING LOCATION OF THE IRRIGATION CONTROLLER, AND BACKFLOW PREVENTION DEVICE AND SLEEVES SHALL BE VERIFIED IN FIELD WITH RESIDENT ENGINEER.
10. ALL PVC SOLVENT WELDS SHALL BE TWO–STEP PROCESS, SEPARATE PRIMER AND GLUE; NO ONE–STEP GLUE SHALL BE ALLOWED. TWO–STEP PROCESS WITH CLEANER AS THE FIRST STEP IS UNACCEPTABLE. PRIMER AND GLUE SHALL BE APPLIED TO BOTH ENDS TO MAKE A SECURE WELD.
11. CONTRACTOR IS RESPONSIBLE FOR A THOROUGH DAILY CLEAN–UP AND COMPLETE WORK CLEAN–UP AT PROJECT CLOSE OUT.

10 0 10 20
HORZ SCALE IN FEET

CALL BEFORE YOU DIG 1–800–424–5555

NO.	REVISION COMMENTS	BY	REVIEW	DATE

DESIGNER
DRAWN BY
CHECKED BY

STATE OF WASHINGTON · MARK G SHELBY · No. 998 EXP. 08/23/2026 · LANDSCAPE ARCHITECT

CITY OF MOUNTLAKE TERRACE
TRANSIT CONNECTION CORRIDOR
IRRIGATION PLAN
TITLE

Otak

32809
PROJECT NUMBER

IR01
DRAWING NO.

SHEET 18 OF 31

© 2026 OTAK, INC.

Plotted: Mar 18, 2026 – 10:56am O:\PROJECT\32800\32809\CADD\ACAD\Dwg\IR01-IR02.dwg Layout Name: IR01

XREF LIST
32809_TBK
X32809-PAVING
X32809-SITE PLAN
X32809-IRRIG
X13086PRP-230TH
XL300-N19-CRP100
TERRACE STATION-031119_2013
S20757B191
ALSEAL_WA

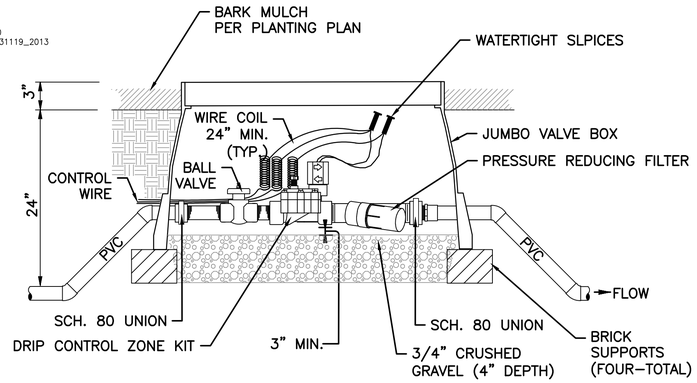

1 DRIP VALVE ASSEMBLY
IR02 NOT TO SCALE

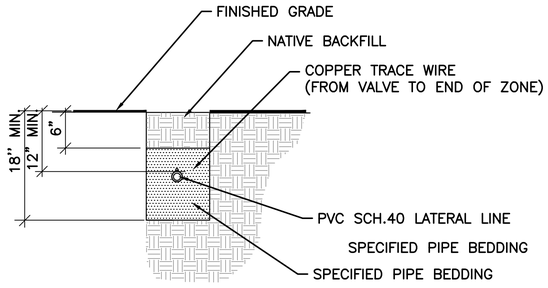

2 TYPICAL TRENCHING IN LANDSCAPE AREAS
IR02 NOT TO SCALE

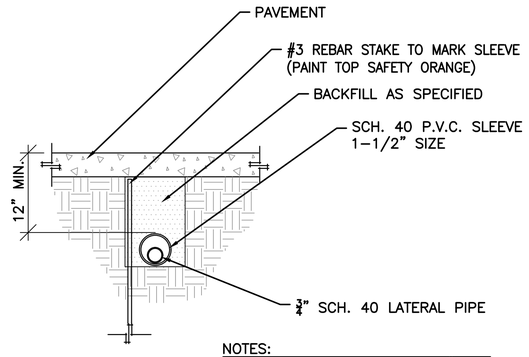

NOTES:
- EXTEND IRRIGATION SLEEVE 6" BEYOND EACH SIDE OF PAVING.
- DIRECT BORE SLEEVE UNDER EXISTING SIDEWALK, TRENCH IN LOCATIONS WHERE NEW PAVEMENT IS SPECIFIED.

3 IRRIGATION SLEEVES UNDER PAVEMENT
IR02 NOT TO SCALE

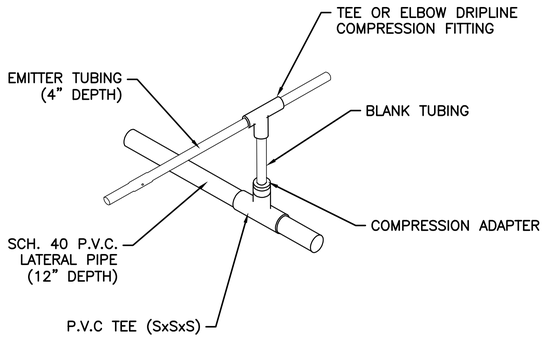

4 DRIPLINE START CONNECTION
IR02 NOT TO SCALE

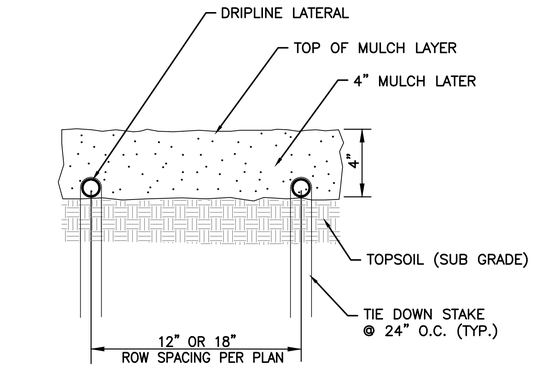

5 DRIPLINE SUBGRADE INSTALLATION
IR02 NOT TO SCALE

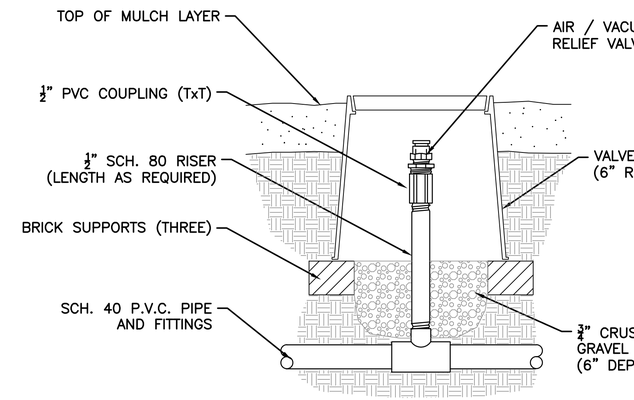

6 DRIPLINE AIR / VACUUM RELEASE VALVE
IR02 NOT TO SCALE

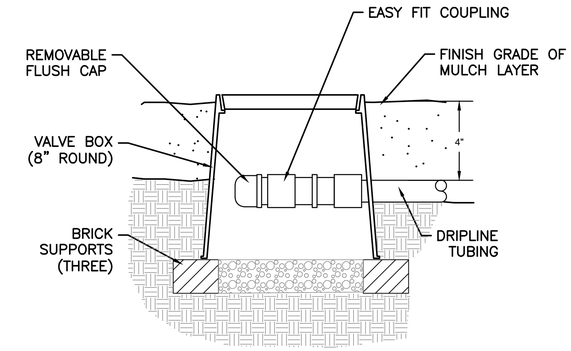

7 MANUAL FLUSH VALVE
IR02 NOT TO SCALE

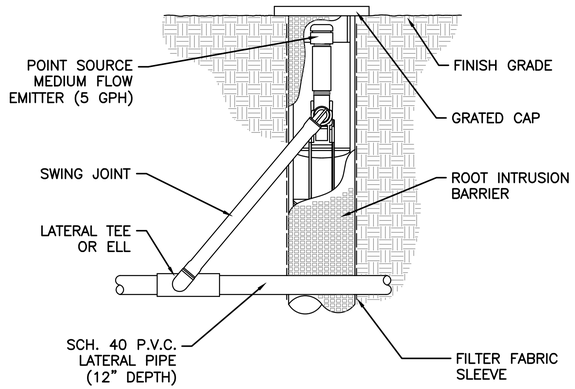

7 TREE ROOT WATERING EMITTERS
IR02 NOT TO SCALE

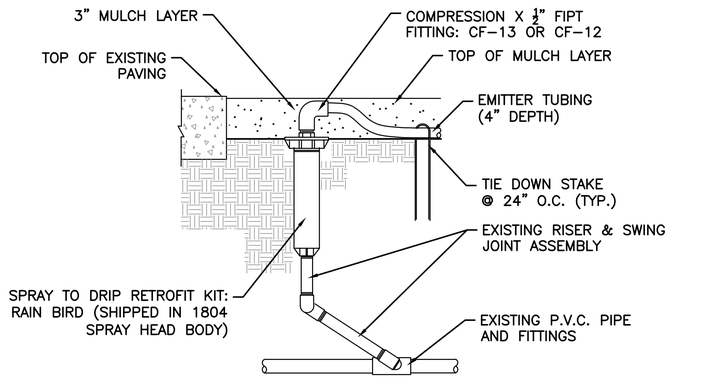

NOTE:
1. REPLACE INTERNAL ASSEMBLY OF EXISTING 1800 SPRINKLER WITH INTERNAL ASSEMBLY OF RETRO-1800.

8 DRIP RETROFIT POINT OF CONNECTION
IR02 NOT TO SCALE

CALL BEFORE YOU DIG 1-800-424-5555

NO.	REVISION COMMENTS	BY	REVIEW	DATE

DESIGNER | DRAWN BY | CHECKED BY

STATE OF WASHINGTON
MARK G SHELBY
No. 998 EXP. 08/23/2026
LANDSCAPE ARCHITECT

CITY OF MOUNTLAKE TERRACE
TRANSIT CONNECTION CORRIDOR
IRRIGATION DETAILS

TITLE

Otak

32809
PROJECT NUMBER

IR02
DRAWING NO.

SHEET 19 OF 31

© 2026 OTAK, INC.

Plotted: Mar 18, 2026 - 10:57am O:\PROJECT\32800\32809\CADD\ACAD\Dwg\IR01-IR02.dwg Layout Name: IR02

XREF LIST
32809_TBK
X32809-STRUCTURES
X32809-SITE PLAN
XLLE-MTLK-VC8
X14384-SITE
X13086PRP-236TH TERRACE STATION-031119_2013
C32809_U630
C32809_R900
ALSEAL_WA
SV-CC-CMLT0006
520757B191

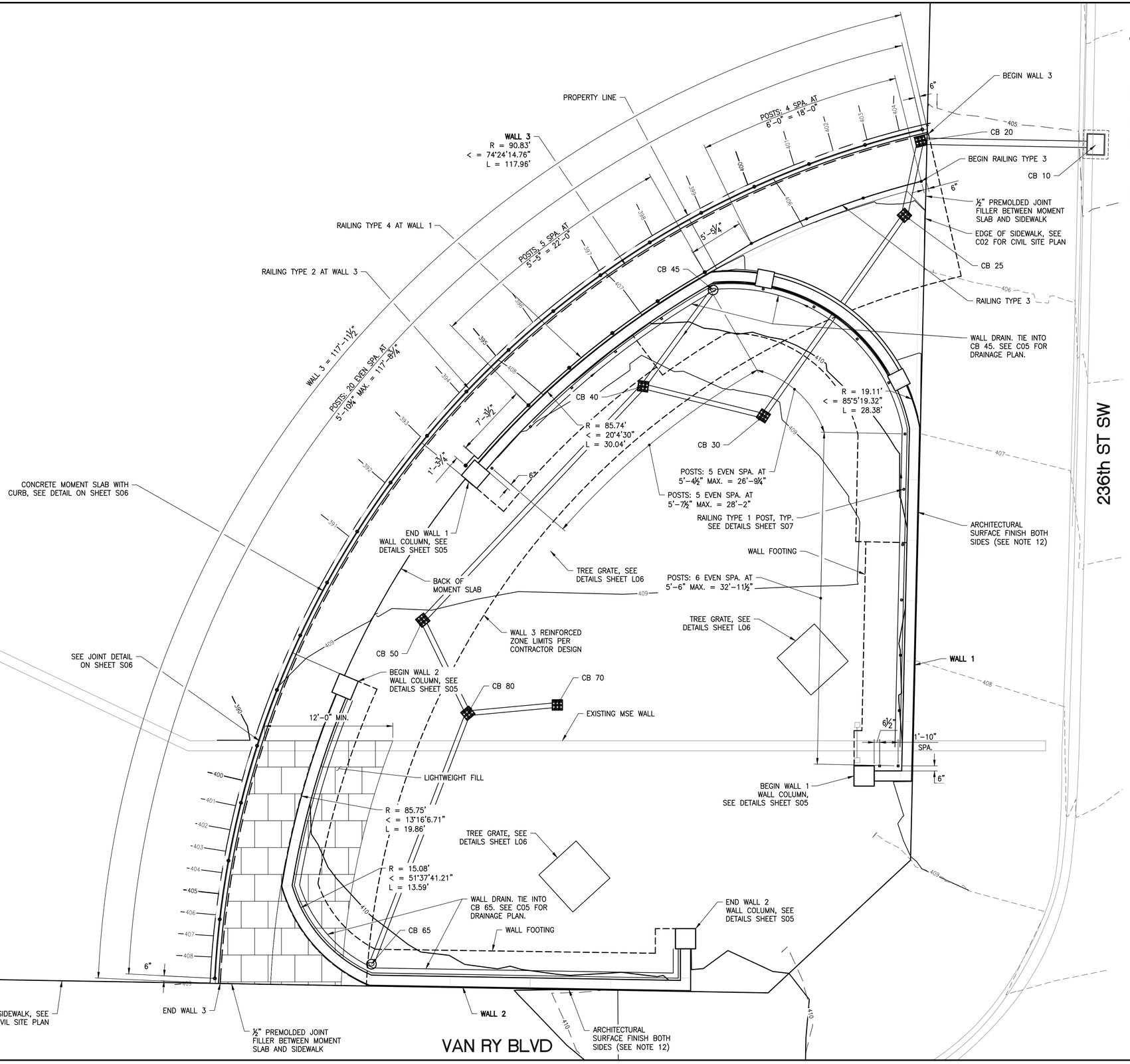

GENERAL STRUCTURAL NOTES

1. ALL MATERIAL AND WORKMANSHIP SHOWN IN THE PLANS SHALL BE IN ACCORDANCE WITH THE REQUIREMENTS OF THE 2025 WASHINGTON STATE DEPARTMENT OF TRANSPORTATION STANDARD SPECIFICATIONS FOR ROAD, BRIDGE, AND MUNICIPAL CONSTRUCTION.
2. CONCRETE SHALL BE CLASS 4000.
3. UNLESS OTHERWISE SPECIFIED THE MINIMUM CLEAR COVER FROM THE FACE OF CONCRETE TO THE FACE OF ANY REINFORCING BAR SHALL BE 2".
4. PROVIDE ¾" CHAMFER AT EXPOSED EDGES OF CONCRETE.
5. FORM CONCRETE AT THE RADII SHOWN. CONCRETE FORMS SHALL NOT BE CHORDED TO APPROXIMATE THE RADIUS.
6. REQUIRED REINFORCING LAP SPLICE LENGTHS:
   - #4 BAR 2'-0"
   - #5 BAR 2'-6"
   - #7 BAR 3'-6"
7. HSS MEMBERS SHALL CONFORM TO THE REQUIREMENTS OF ASTM A500 GR. B.
8. PLATES AND SOLID BARS SHALL CONFORM TO THE REQUIREMENTS OF ASTM A36.
9. BOLTS SHALL CONFORM TO THE REQUIREMENTS OF TYPE 304/316 ASTM F593 CW1. NUTS SHALL CONFORM TO THE REQUIREMENTS OF ASTM F594. WASHERS SHALL CONFORM TO THE REQUIREMENTS OF STAINLESS STEEL TYPE 304 OR 316.
10. ALL STEEL HANDRAIL AND GUARDRAIL PARTS SHALL BE HOT-DIP GALVANIZED AND POWDERCOATED GLOSS BLACK, EXCEPT ANCHOR BOLTS, NUTS, AND WASHERS. EXPOSED BOLTS, NUTS, AND WASHERS SHALL BE FIELD COATED TO MATCH AFTER INSTALLATION.
11. RESIN BONDED ANCHORS SHALL BE BONDED TO CONCRETE USING HILTI HIT-HY 200 INJECTION ADHESIVE, OR APPROVED EQUAL, IN ACCORDANCE WITH THE MANUFACTURER'S WRITTEN INSTRUCTIONS.
12. PROVIDE CLASS 1 SURFACE FINISH TO ALL EXPOSED WALL SURFACES. PROVIDE HORIZONTAL BOARD FORM LINER ARCHITECTURAL SURFACE FINISH TO MATCH ADJACENT SOUND TRANSIT MOUNTLAKE TERRACE LIGHT RAIL STATION BOARD FORM FINISH AND IN ACCORDANCE WITH SPECIFICATIONS SECTION 6-13. SEE ALSO SAMPLE IMAGE BELOW FOR REFERENCE.
13. DIMENSIONS FOR RAIL POST LAYOUT ARE TO CENTER OF POST.
14. PROVIDE EXPANDED POLYSTYRENE (EPS) "GEOFOAM" LIGHTWEIGHT FILL ACCORDING TO ASTM D6817 AND THE SPECIAL PROVISIONS.

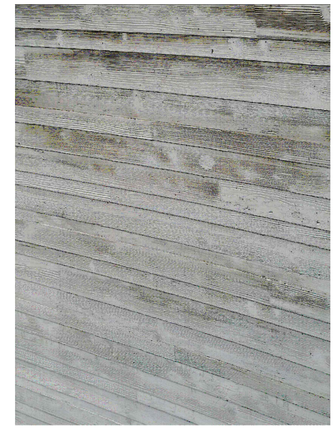

HORIZONTAL BOARD FORM LINER ARCHITECTURAL SURFACE FINISH REFERENCE IMAGE

SEE NOTE 12, THIS SHEET

HORZ SCALE 5 0 5 10 IN FEET

CALL BEFORE YOU DIG 1-800-424-5555

NO.	REVISION COMMENTS	BY	REVIEW	DATE

DESIGNER | DRAWN BY | CHECKED BY

ROBERT P. DOHERTY — STATE OF WASHINGTON — 43425 — REGISTERED PROFESSIONAL ENGINEER — 3/18/2026

CITY OF MOUNTLAKE TERRACE
TRANSIT CONNECTION CORRIDOR
WALL LAYOUT

TITLE

Otak

32809 PROJECT NUMBER

S01 DRAWING NO.

SHEET 20 OF 31

© 2026 OTAK, INC.

Plotted: Mar 18, 2026 - 10:59am O:\PROJECT\32800\32809\CADD\ACAD\Dwg\S01-S03.dwg Layout Name: S01

XREF LIST
32809_TBK
X32809-STRUCTURES
X32809-SITE PLAN
XLLE-MTLK-VC8
X14384-SITE
X13086PRP-25BTH
TERRACE STATION-031119_2013
C32809_U630
C32809_R900
ALSEAL_WA
SV-CC-CMLT0006
S20757B191

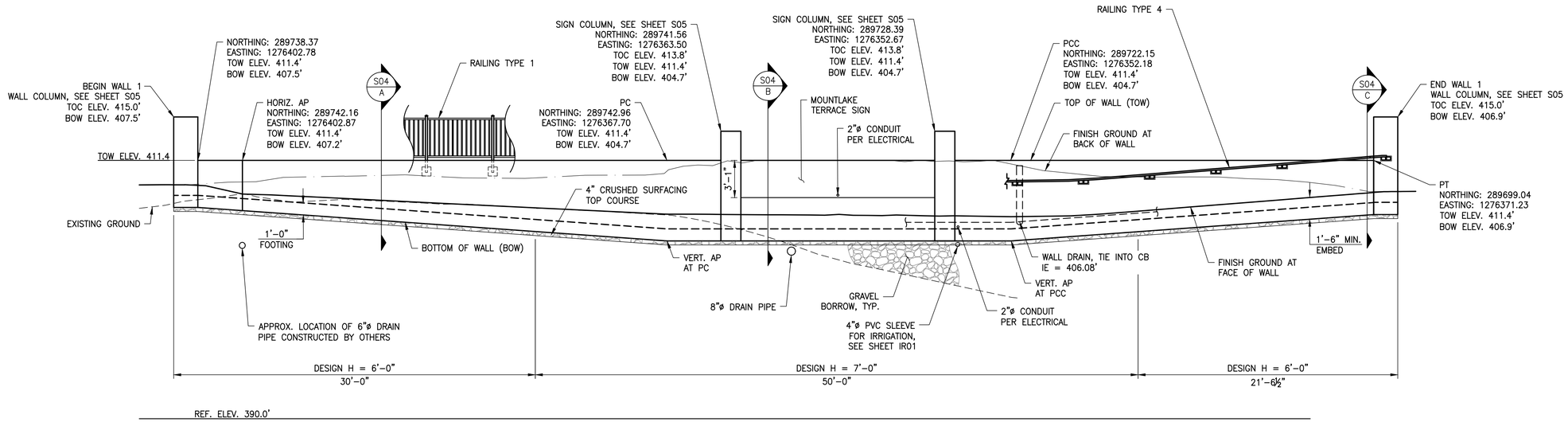

WALL 1 ELEVATION

SCALE: 1" = 5'
SEE SHEET L07 FOR MOUNTLAKE TERRACE SIGN

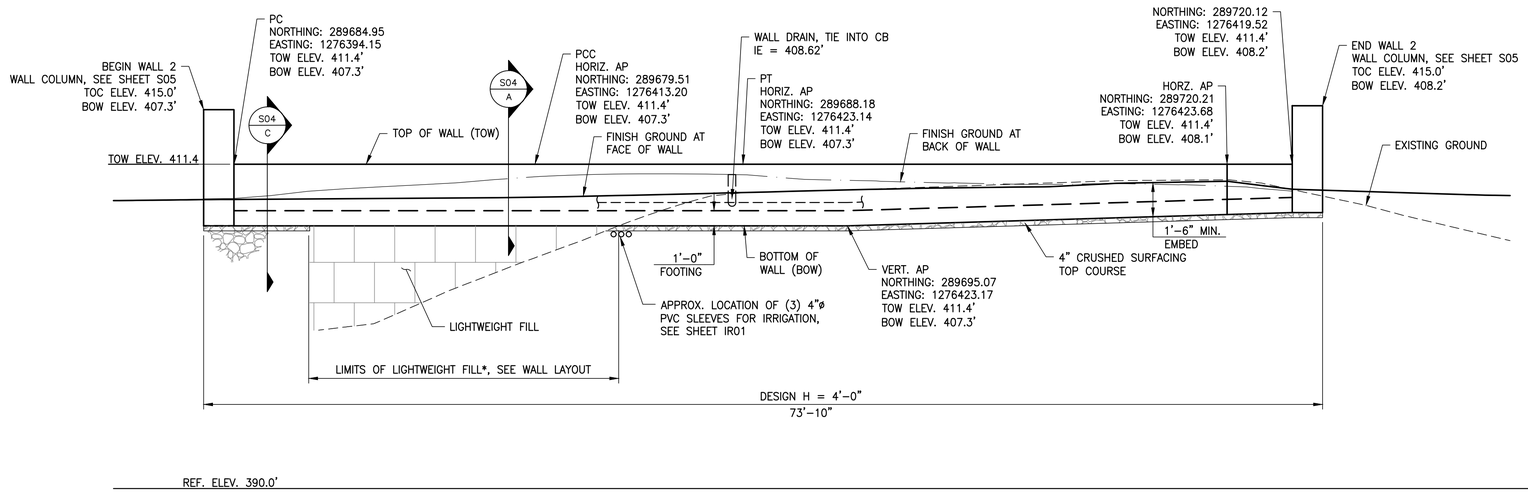

WALL 2 ELEVATION

SCALE: 1" = 5'
* PROVIDE CONSTRUCTION GEOTEXTILE FOR SEPARATION ON TOP OF AND ON THE ROADWAY VERTICAL FACE OF LIGHTWEIGHT FILL. OMIT CRUSHED SURFACING ON LIGHTWEIGHT FILL AND PLACE CONCRETE DIRECTLY ON CONSTRUCTION GEOTEXTILE.

NOTE:
AP = ANGLE POINT
TOC = TOP OF COLUMN
TOW = TOP OF WALL
BOW = BOTTOM OF WALL

CALL BEFORE YOU DIG 1-800-424-5555

NO.	REVISION COMMENTS	BY	REVIEW	DATE

DESIGNER
DRAWN BY
CHECKED BY

ROBERT P. DOHERTY
STATE OF WASHINGTON
43425
REGISTERED
PROFESSIONAL ENGINEER
3/18/2026

CITY OF MOUNTLAKE TERRACE
TRANSIT CONNECTION CORRIDOR
WALL ELEVATIONS

TITLE

Otak

32809
PROJECT NUMBER

S02
DRAWING NO.

SHEET 21 OF 31

© 2026 OTAK, INC.

Plotted: Mar 18, 2026 - 10:59am C:\PROJECT\32800\32809\CADD\ACAD\Dwg\S01-S03.dwg Layout Name: S02

XREF LIST
32809_TBK
X32809-STRUCTURES
X32809-SITE PLAN
XLLE-MTLK-VC8
X14384-SITE
X13086PRP-236TH
TERRACE STATION-031119_2013
C32809_U630
C32809_R900
ALSEAL_WA
SV-CC-CMLT0006
520757B191

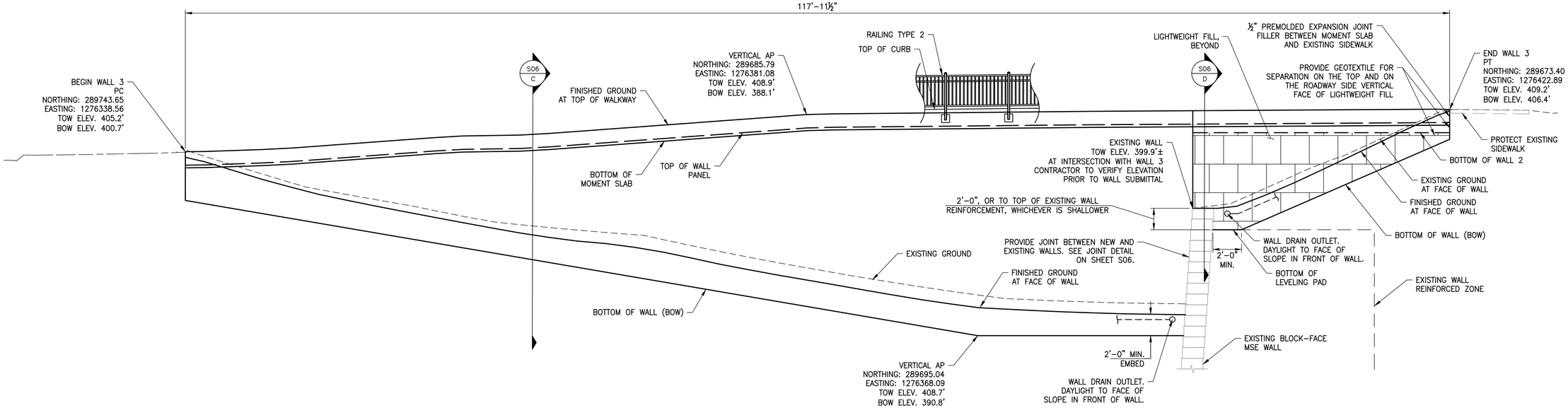

WALL 3 ELEVATION

SCALE: 1" = 5'

NOTE:
AP = ANGLE POINT
TOC = TOP OF COLUMN
TOW = TOP OF WALL
BOW = BOTTOM OF WALL

CALL BEFORE YOU DIG 1-800-424-5555

NO.	REVISION COMMENTS	BY	REVIEW	DATE

DESIGNER
DRAWN BY
CHECKED BY

ROBERT P. DOHERTY
STATE OF WASHINGTON
43425
REGISTERED
PROFESSIONAL ENGINEER
3/18/2026

CITY OF MOUNTLAKE TERRACE
TRANSIT CONNECTION CORRIDOR
WALL ELEVATIONS

TITLE

Otak

32809
PROJECT NUMBER

S03
DRAWING NO.

SHEET 22 OF 31

© 2026 OTAK, INC.

Plotted: Mar 18, 2026 - 10:59am O:\PROJECT\32800\32809\CADD\ACAD\Dwg\S01-S03.dwg Layout Name: S03

XREF LIST
32809_TBK
ALSEAL_WA

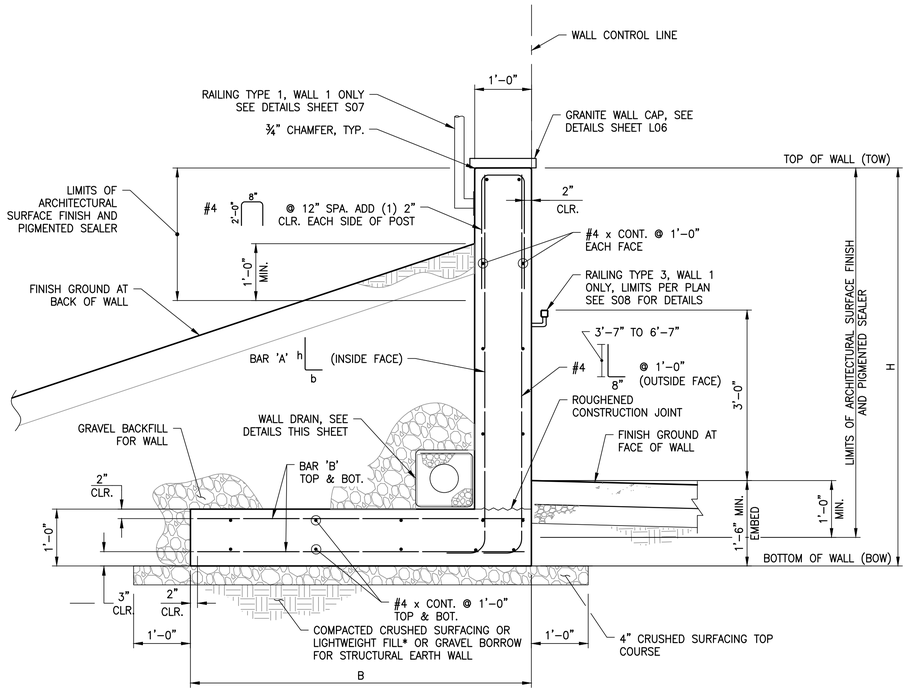

A S02 WALL TYPICAL SECTION

SCALE: ¾" = 1'-0"

MODIFY BAR LENGTHS TO PROVIDE 2" CLEARANCE.
*PROVIDE CONSTRUCTION GEOTEXTILE FOR SEPARATION ON TOP OF AND ON THE ROADWAY VERTICAL FACE OF LIGHTWEIGHT FILL. OMIT CRUSHED SURFACING ON LIGHTWEIGHT FILL AND PLACE CONCRETE DIRECTLY ON CONSTRUCTION GEOTEXTILE.

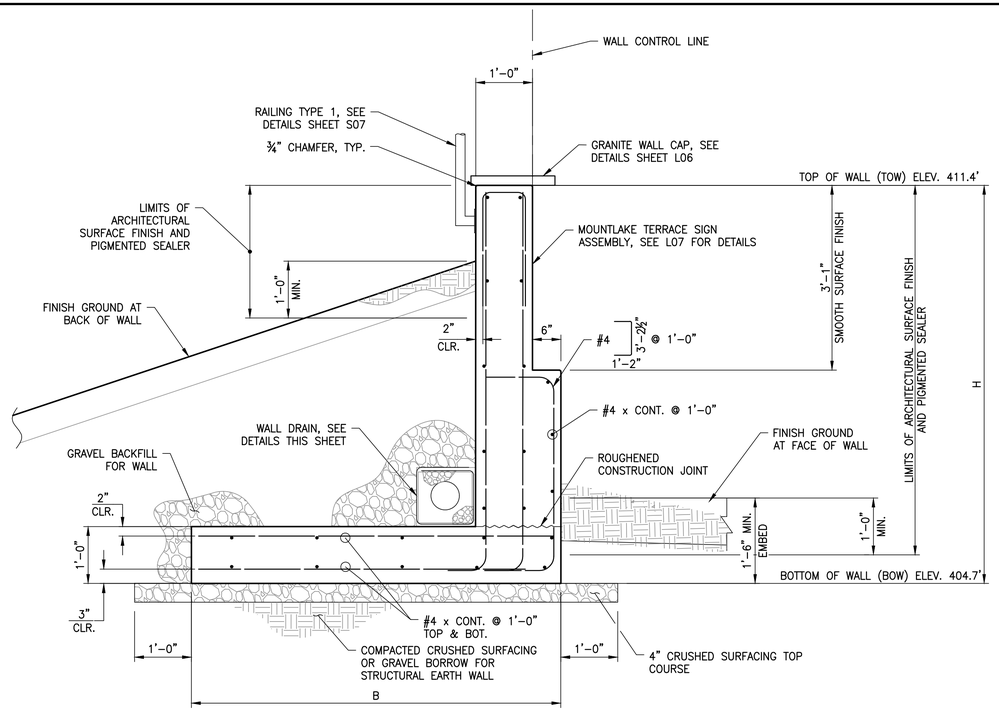

B S02 WALL TYPICAL SECTION

SCALE: ¾" = 1'-0"

SEE SECTION A AND SHEET L07 FOR DETAILS NOT SHOWN.
USE 7'-0" DESIGN HEIGHT AND MODIFY BAR LENGTHS TO PROVIDE 2" CLEARANCE.

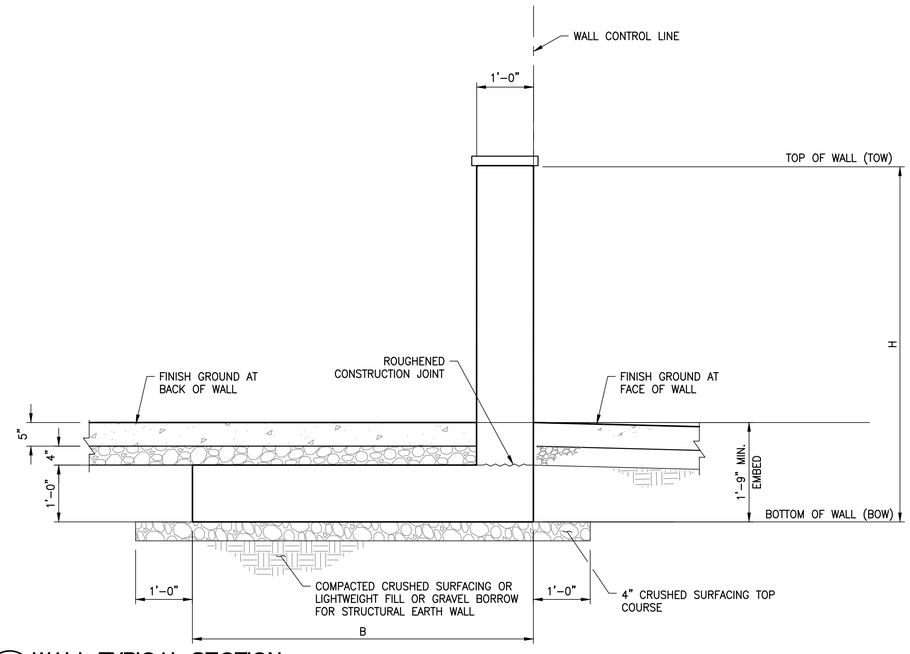

C S02 WALL TYPICAL SECTION

SCALE: ¾" = 1'-0"

MODIFY BAR LENGTHS TO PROVIDE 2" CLEARANCE.
SEE SECTION A THIS SHEET FOR DETAILS NOT SHOWN.

WALL REINFORCING TABLE (WALLS 1 AND 2)

WALL DESIGN HEIGHT H	WALL BASE WIDTH B	BAR 'A'				BAR 'B'		
		SIZE	SPACING	b	h	SIZE	SPACING	LENGTH
7'-0"	9'-0"	#7	6"	1'-2"	6'-7"	#7	6"	8'-8"
6'-0"	8'-0"	#6	6"	1'-0"	5'-7"	#6	6"	7'-8"
4'-0"	5'-0"	#4	1'-0"	8"	3'-7"	#4	1'-0"	4'-8"

NOTE:
SEE WALL PROFILES ON SHEET S02 AND S03 FOR WALL DESIGN HEIGHT. NOTIFY THE ENGINEER PRIOR TO INSTALLATION OF REINFORCING BARS IF ACTUAL WALL HEIGHT DIFFERS FROM THE DESIGN HEIGHT BY 3 INCHES OR MORE.

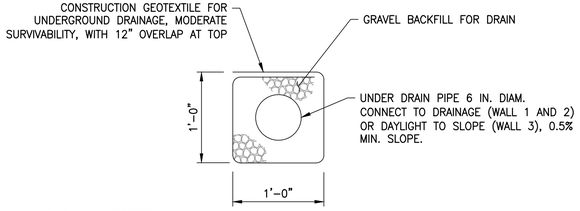

WALL DRAIN DETAIL

SCALE: 1" = 10'

CALL BEFORE YOU DIG 1-800-424-5555

NO.	REVISION COMMENTS	BY	REVIEW	DATE

DESIGNER
DRAWN BY
CHECKED BY

ROBERT P. DOHERTY
STATE OF WASHINGTON
43425
REGISTERED
PROFESSIONAL ENGINEER
3/18/2026

CITY OF MOUNTLAKE TERRACE
TRANSIT CONNECTION CORRIDOR
WALL DETAILS

TITLE

Otak

32809
PROJECT NUMBER

S04
DRAWING NO.

SHEET 23 OF 31

© 2026 OTAK, INC.

Plotted: Mar 18, 2026 - 11:00am O:\PROJECT\32800\32809\CADD\ACAD\Dwg\S04-S06.dwg Layout Name: S04

XREF_LIST
32809_TBK
ALSEAL_WA

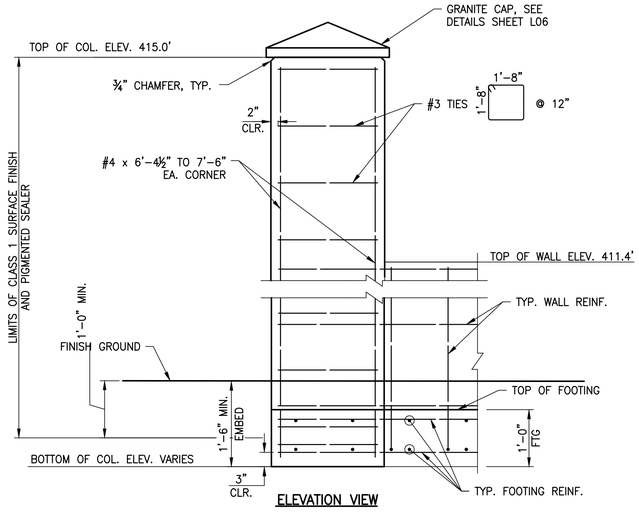

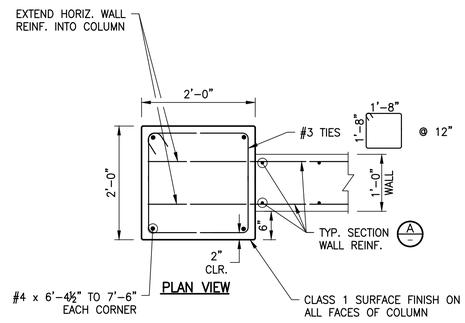

WALL COLUMN DETAILS

SCALE: 3/4" = 1'-0"

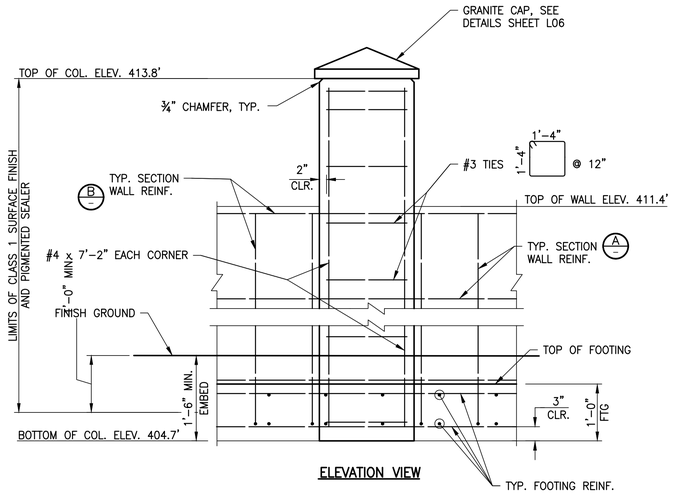

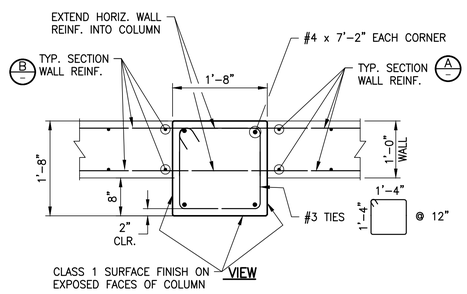

SIGN COLUMN DETAILS

SCALE: 3/4" = 1'-0"

NO.	REVISION COMMENTS	BY	REVIEW	DATE

DESIGNER | DRAWN BY | CHECKED BY

ROBERT P. DOHERTY
STATE OF WASHINGTON
43425
REGISTERED PROFESSIONAL ENGINEER
3/18/2026

CITY OF MOUNTLAKE TERRACE
TRANSIT CONNECTION CORRIDOR
WALL DETAILS

TITLE

Otak

32809
PROJECT NUMBER

S05
DRAWING NO.

SHEET 24 OF 31

© 2026 OTAK, INC.

CALL BEFORE YOU DIG 1-800-424-5555

Plotted: Mar 18, 2026 - 11:01am O:\PROJECT\32800\32809\CADD\ACAD\Dwg\S04-S06.dwg Layout Name: S05

XREF LIST
32809_TBK
ALSEAL_WA

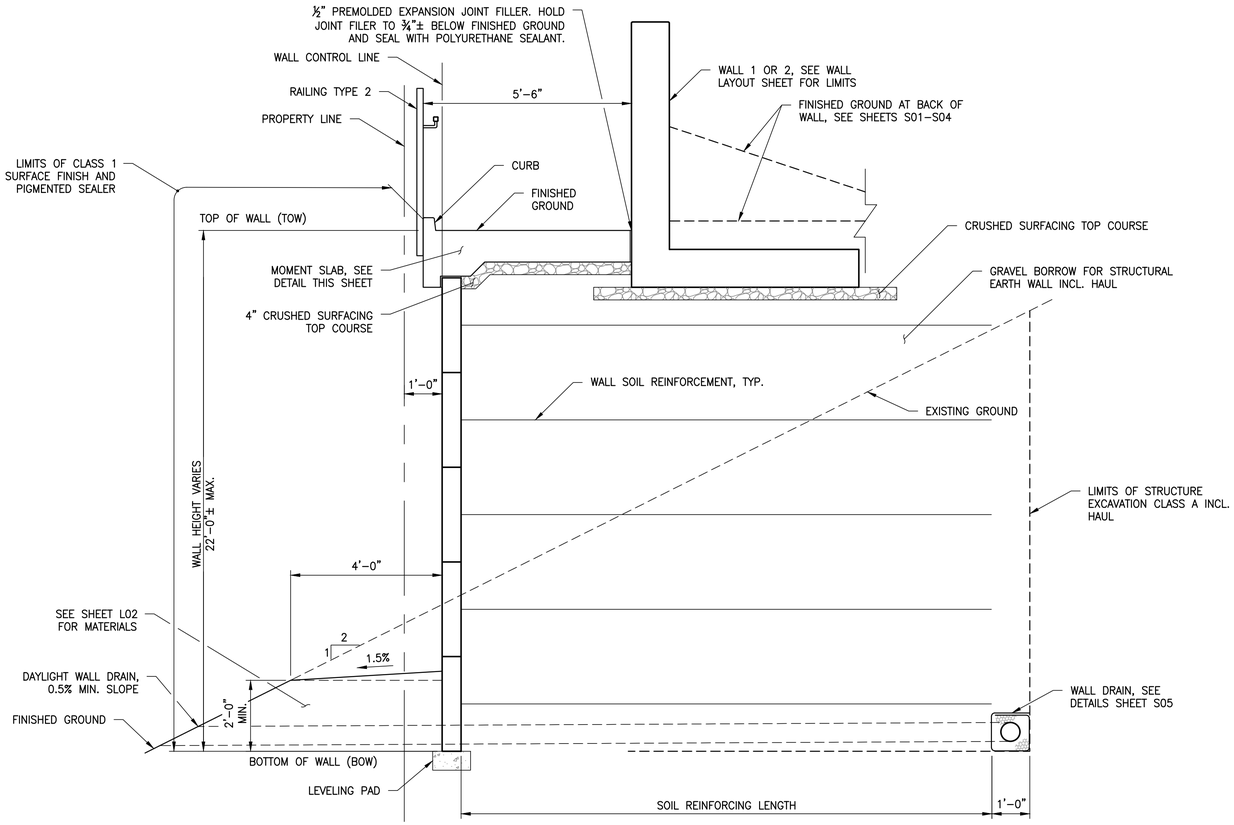

C S06 WALL 3 TYPICAL SECTION

SCALE: ½" = 1'-0"

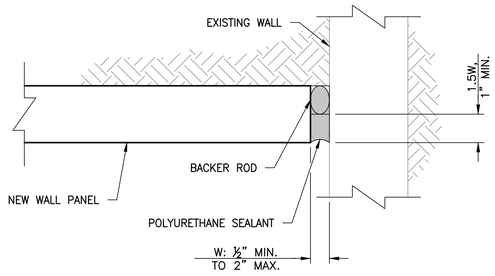

JOINT DETAIL

SCALE: 1 ½" = 1'-0"

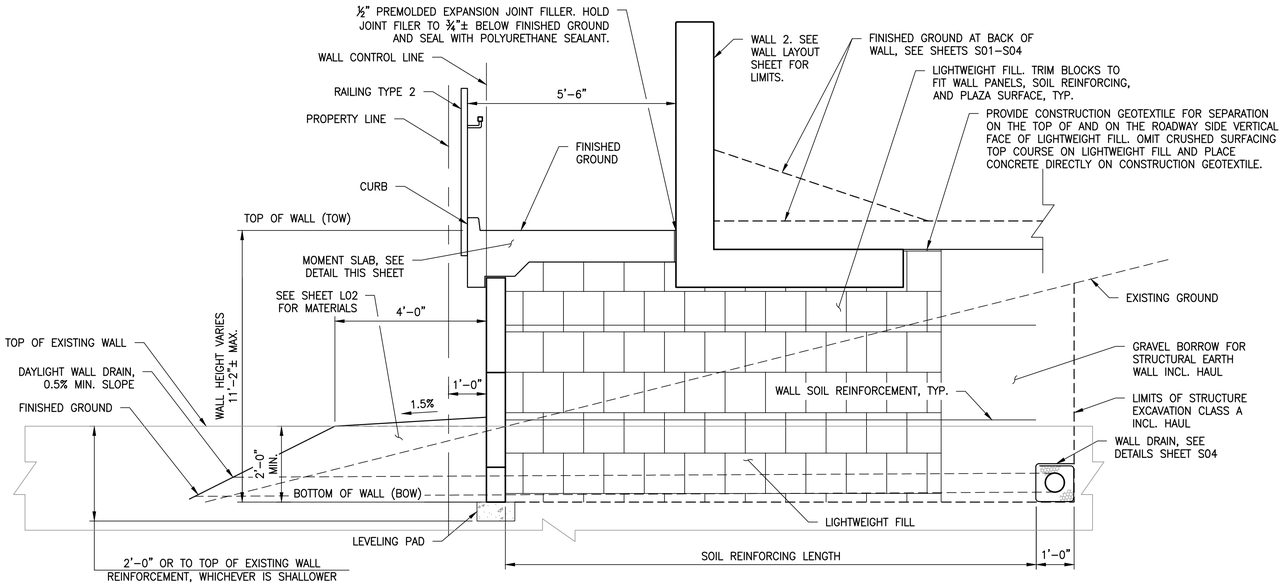

D S06 WALL 3 TYPICAL SECTION AT LIGHTWEIGHT FILL

SCALE: ½" = 1'-0"

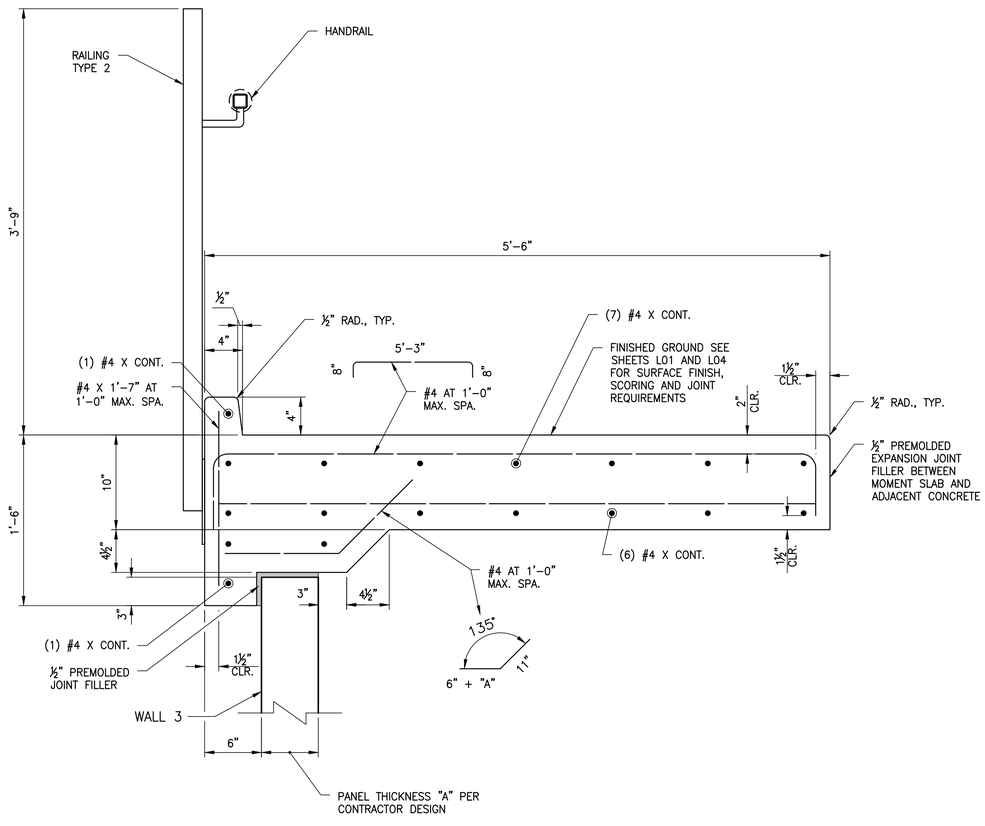

E S06 MOMENT SLAB

SCALE: 1 ½" = 1'-0"

CALL BEFORE YOU DIG 1-800-424-5555

NO.	REVISION COMMENTS	BY	REVIEW	DATE

DESIGNER

DRAWN BY

CHECKED BY

ROBERT P. DOHERTY — STATE OF WASHINGTON — 43425 — REGISTERED PROFESSIONAL ENGINEER

3/18/2026

CITY OF MOUNTLAKE TERRACE
TRANSIT CONNECTION CORRIDOR
WALL DETAILS

TITLE

Otak

32809
PROJECT NUMBER

S06
DRAWING NO.

SHEET 25 OF 31

© 2026 OTAK, INC.

Plotted: Mar 18, 2026 - 11:01am O:\PROJECT\32800\32809\CADD\ACAD\Dwg\S04-S06.dwg Layout Name: S06

XREF LIST
32809_TBK
ALSEAL_WA

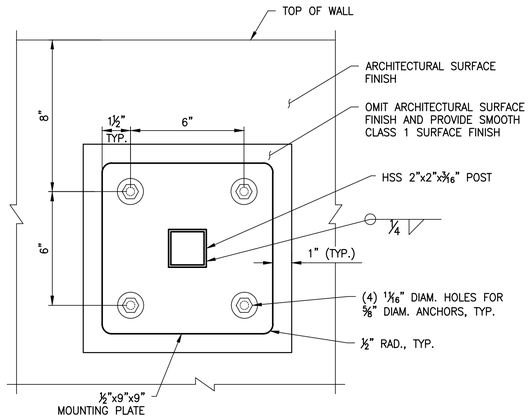

SECTION A-A

SCALE: 3" = 1'-0"

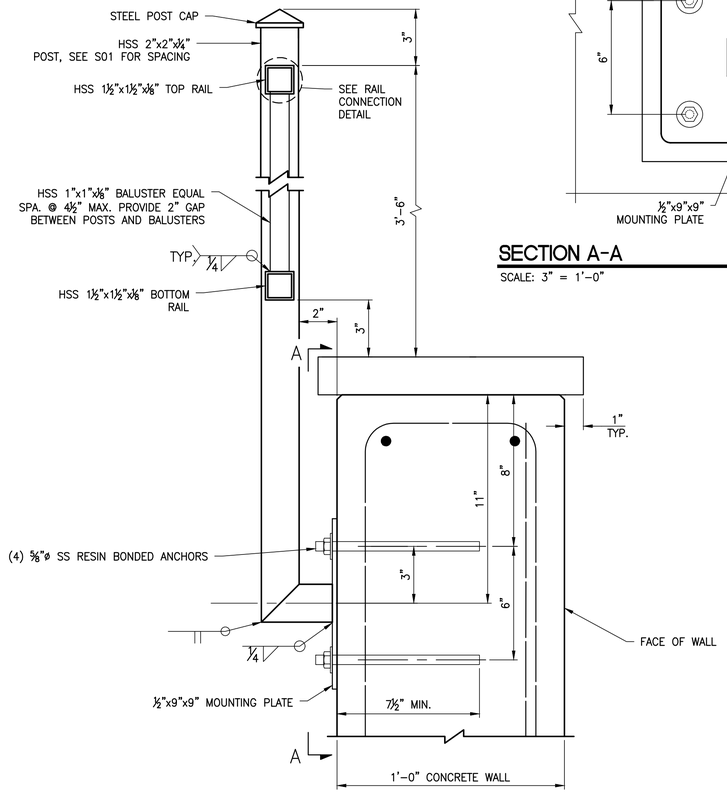

RAILING TYPE 1 TYPICAL SECTION

SCALE: 3" = 1'-0"

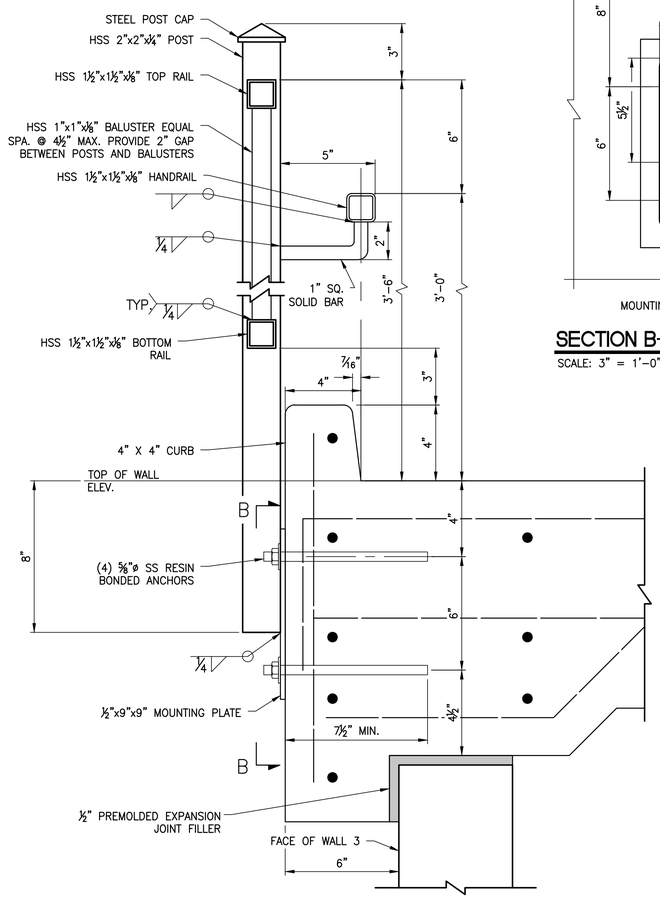

RAILING TYPE 2 TYPICAL SECTION

SCALE: 3" = 1'-0"

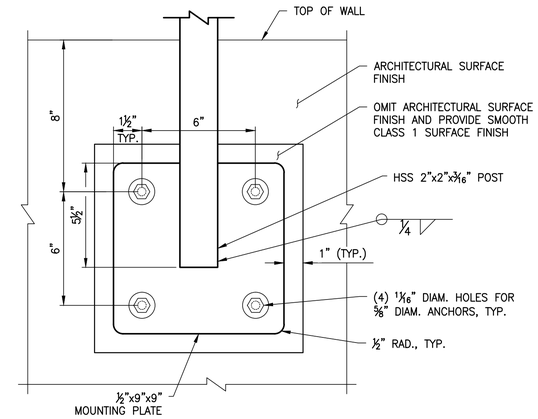

SECTION B-B

SCALE: 3" = 1'-0"

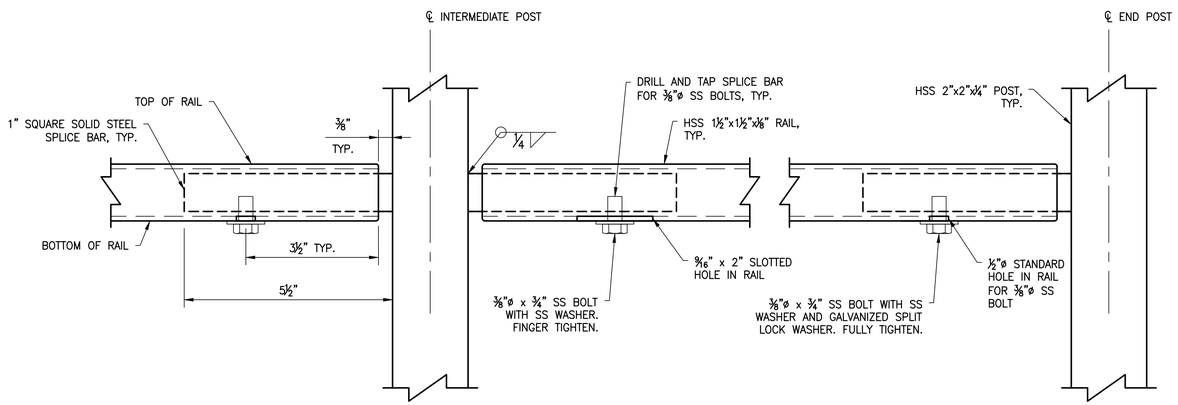

RAIL CONNECTION DETAIL

SCALE: 6" = 1'-0"
BALUSTERS NOT SHOWN FOR CLARITY

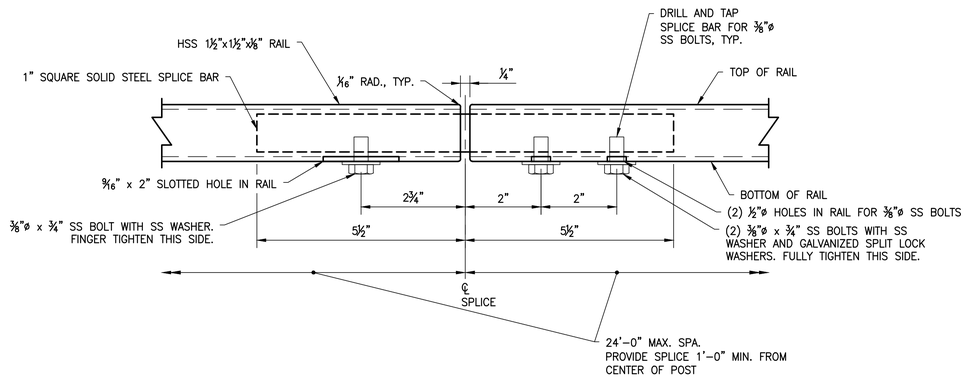

HANDRAIL SPLICE DETAIL

SCALE: 6" = 1'-0"

CALL BEFORE YOU DIG 1-800-424-5555

NO.	REVISION COMMENTS	BY	REVIEW	DATE

DESIGNER
DRAWN BY
CHECKED BY

ROBERT P. DOHERTY
STATE OF WASHINGTON
43425
REGISTERED
PROFESSIONAL ENGINEER
3/18/2026

CITY OF MOUNTLAKE TERRACE
TRANSIT CONNECTION CORRIDOR
GUARDRAIL DETAILS

TITLE

Otak

32809
PROJECT NUMBER

S07
DRAWING NO.

SHEET 26 OF 31

© 2026 OTAK, INC.

Plotted: Mar 18, 2026 - 11:02am O:\PROJECT\32800\32809\CADD\ACAD\Dwg\S07-S08.dwg Layout Name: S07

XREF LIST
32809_TBK
ALSEAL_WA

NOTES:
1. SEE SECTION VIEW AT WALL 3 FOR DETAILS NOT SHOWN
2. INSTALL POSTS PLUMB. PROVIDE GROUT PAD AND LEVELING NUTS AND WASHERS TO ADJUST BASE PLATE TO LEVEL POSITION.

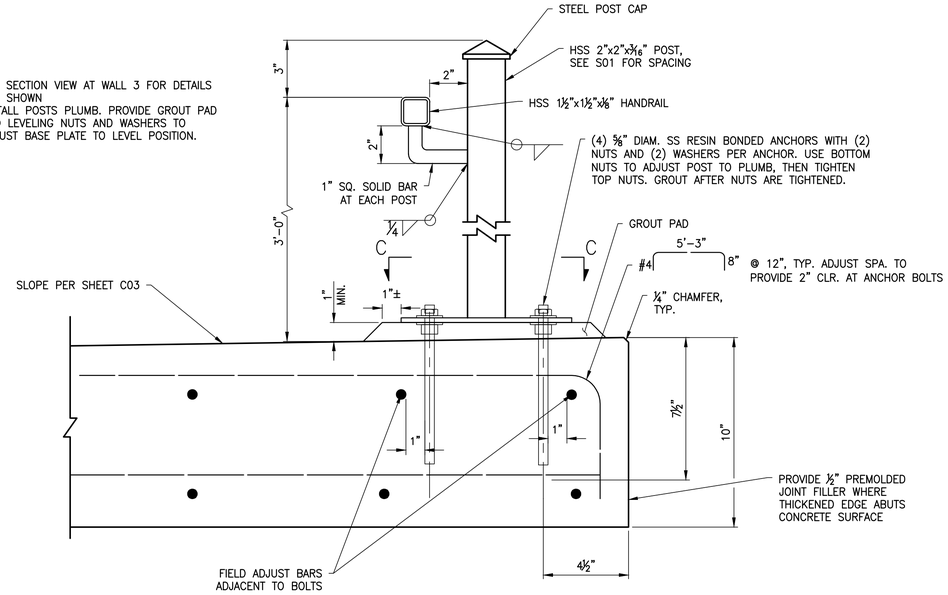

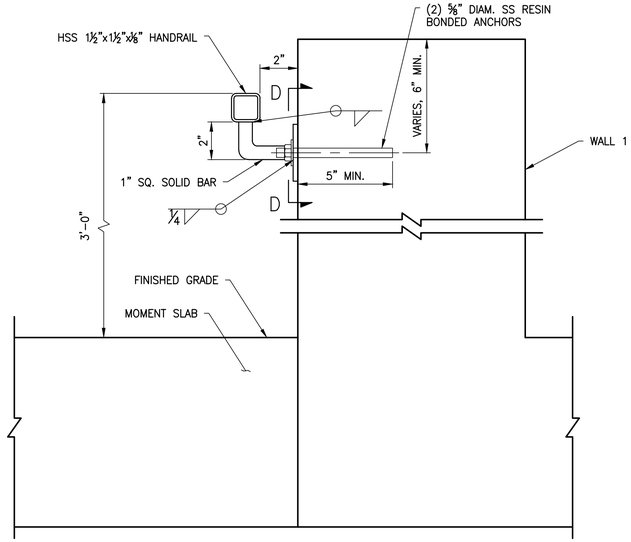

NOTE: SEE WALL TYPICAL SECTION ON SHEET S04 FOR DETAILS NOT SHOWN

RAILING TYPE 3 TYPICAL SECTION

SCALE: 3" = 1'-0"

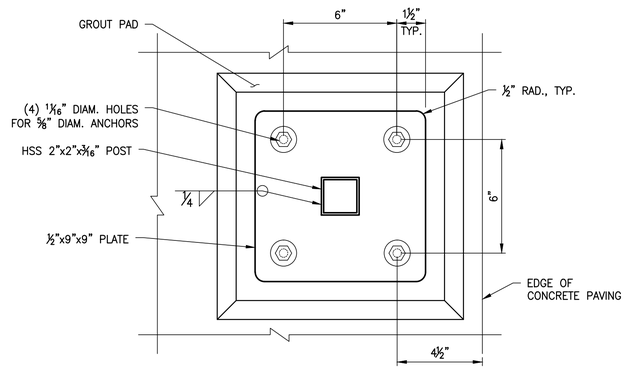

SECTION C-C

SCALE: 3" = 1'-0"

RAILING TYPE 4 TYPICAL SECTION

SCALE: 3" = 1'-0"

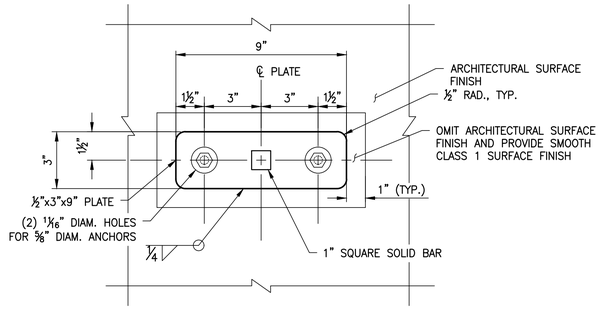

SECTION D-D

SCALE: 3" = 1'-0"

CALL BEFORE YOU DIG 1-800-424-5555

NO.	REVISION COMMENTS	BY	REVIEW	DATE

DESIGNER
DRAWN BY
CHECKED BY

ROBERT P. DOHERTY
STATE OF WASHINGTON
43425
REGISTERED
PROFESSIONAL ENGINEER
3/18/2026

CITY OF MOUNTLAKE TERRACE
TRANSIT CONNECTION CORRIDOR
HANDRAIL DETAILS

TITLE

Otak

32809
PROJECT NUMBER

S08
DRAWING NO.

SHEET 27 OF 31

© 2026 OTAK, INC.

Plotted: Mar 18, 2026 - 11:02am O:\PROJECT\32800\32809\CADD\ACAD\Dwg\S07-S08.dwg Layout Name: S08

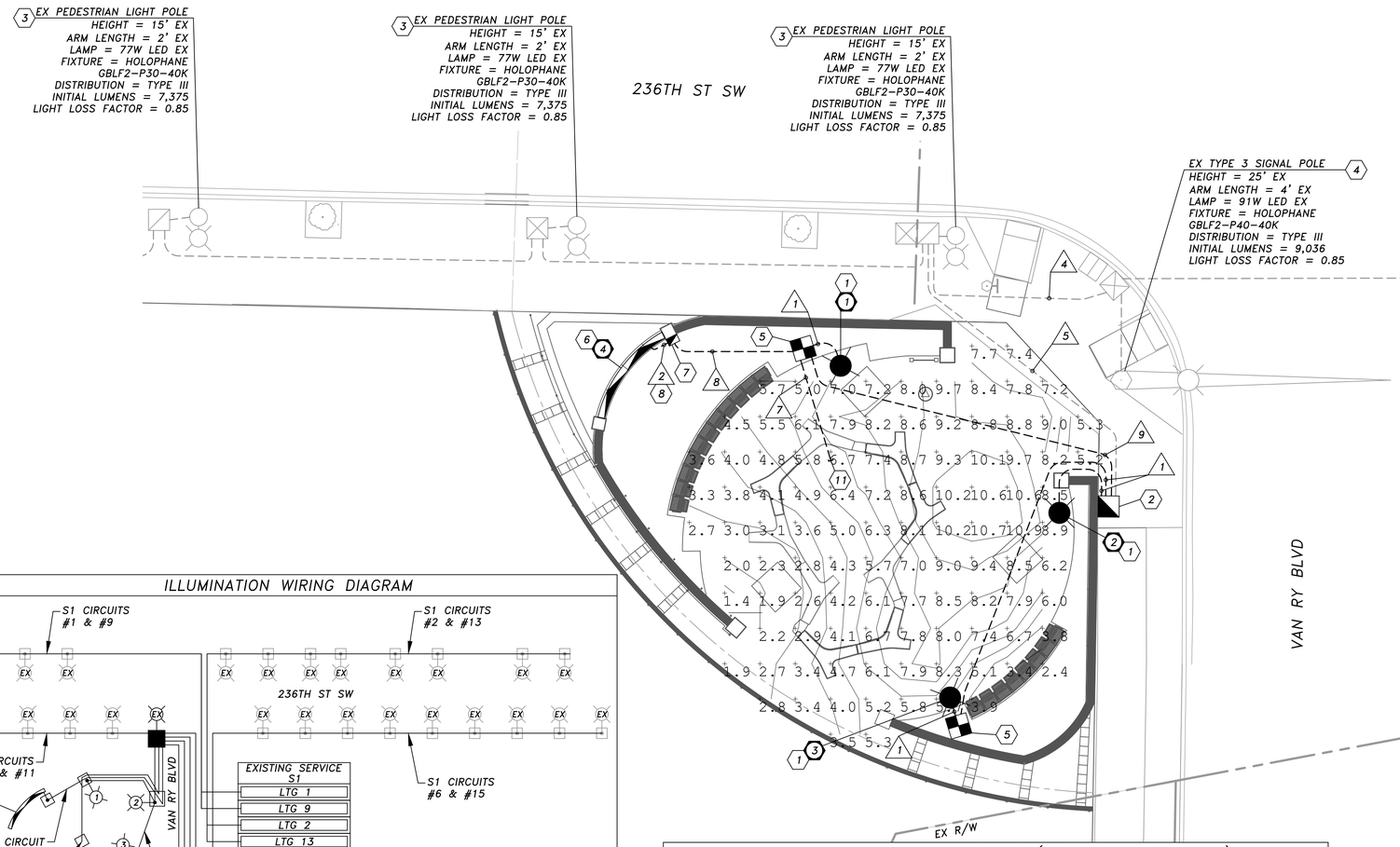

ILLUMINATION WIRING DIAGRAM

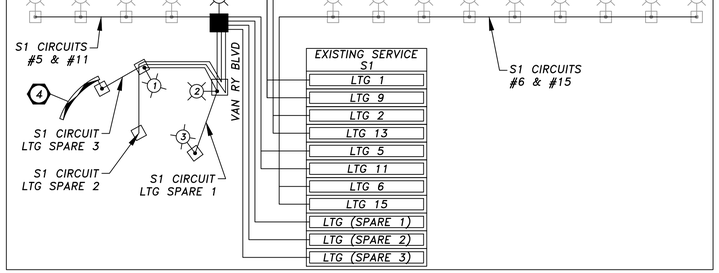

EX LTG	240	Service Voltage	A	L	R	Vd=2ALR		
Circuit Segment	Conductor Size (#)	(Watts) Load on Segment	Load on Segment (AMPS)	Length (Ft)	Resitance (ohms / Ft)	Voltage Drop (Volts)	LookUp	Σ Voltage Drop (Volts)
SVC to New JB	8	291	1.46	195	0.000809	0.46	0.000809	0.46
New JB to JB 1	8	153	0.77	55	0.000809	0.07	0.000809	0.53
JB 1 to New Cabinet	8	84	0.42	20	0.000809	0.01	0.000809	0.54
New Cabinet to New Linear Fixtures	8	84	0.42	20	0.000809	0.01	0.000809	0.55
%Voltage Drop=			0.23	Σ of Voltage Drop=				0.6

ILLUMINATION WIRING SCHEDULE (AFFECTED RUNS ONLY)

NO.	RACEWAY CONDUIT SIZE	ILLUM. #8 EX	ILLUM. #8 NEW	ILLUM. #6 EX	ILLUM. #6 NEW	ILLUM. SIGN EX	ILLUM. SIGN NEW	GFCI #6 (OUTLET) EX	GFCI #6 (OUTLET) NEW	EQUIP. GROUND * EX	EQUIP. GROUND * NEW	TRACER WIRE EX	TRACER WIRE NEW	CONDUIT FILL	MAX. FILL (26%)	MAX. FILL (40%)
1	2" SCH40 PVC		2						2		1			0.331	0.856	---
2	2" GRS						**							0.399	0.890	---
3 ***	EX 2" SCH80 PVC	6	6						2		1			0.891	---	1.150
	EX 3" SCH80 PVC SPARE											1		---	---	2.577
4	EX 2" SCH40 PVC ***	4	6						2		1			0.779	---	1.316
5	EX 2" SCH40 PVC ***		6						2		1			0.447	---	1.316
6 ***	EX 2" SCH40 PVC SPARE											1		---	---	1.316
	EX 2" SCH40 PVC	10								1				0.616	---	1.316
	EX 3" SCH40 PVC	8	6	4					2		1			1.295	---	2.577
7	2" SCH40 PVC SPARE												1	---	0.856	---
8	2" SCH80 PVC		2								1			0.168	0.750	---
9	2" SCH40 PVC		6						2		1			0.555	0.856	---

* EQUIPMENT GROUND SIZE SHALL BE EQUAL TO OR LARGER THAN THE LARGEST WIRE SIZE IN THE CONDUIT.
** INSTALL WIRING IN ACCORDANCE WITH MANUFACTURER'S RECOMMENDATIONS AND APPLICABLE INSTALLATION CODE BY A PERSON FAMILIAR WITH THE CONSTRUCTION AND OPERATION OF THE PRODUCT AND THE HAZARDS INVOLVED.
*** OTHER EXISTING CONDUIT AND CONDUCTORS MAY BE PRESENT.

ILLUMINATION POLE SCHEDULE (PLAZA LIGHTING)

LUM. POLE NO.	CALCULATION AREA	NORTHING (1)	EASTING (1)	WATTAGE	VOLTAGE	INITIAL LUMENS	FIXTURE MODEL (4)	MOUNTING HEIGHT	POLE HEIGHT	POLE MODEL (5)	BASE TYPE	SERVICE/ CIRCUIT	COMMENT
1	PLAZA	289735.9	1276387.2	69W LED	240	8,462	KIM LIGHTING 1SA-WP9SA2-54L-405-4K7-3-UNV-BLS-7PR	15'	16'	VALMONT (3) 150830505TH-D1-DBL-30RPTSC-LAB	HINGE	EX LTG (S1)	FOUNDATION PER CITY OF MOUNTLAKE TERRACE STANDARD PLAN 541. POLE AND FIXTURE TO BE BLACK GLOSS SMOOTH.
2	PLAZA	289715.0	1276418.2	69W LED	240	8,462	KIM LIGHTING 1SA-WP9SA2-54L-405-4K7-3-UNV-BLS-7PR	15'	16'	VALMONT (3) 150830505TH-D1-DBL-30RPTSC-LAB	HINGE	EX LTG (S1)	FOUNDATION PER CITY OF MOUNTLAKE TERRACE STANDARD PLAN 541. POLE AND FIXTURE TO BE BLACK GLOSS SMOOTH.
3	PLAZA	289688.9	1276402.7	69W LED	240	8,462	KIM LIGHTING 1SA-WP9SA2-54L-405-4K7-3-UNV-BLS-7PR	15'	16'	VALMONT (3) 150830505TH-D1-DBL-30RPTSC-LAB	HINGE	EX LTG (S1)	FOUNDATION PER CITY OF MOUNTLAKE TERRACE STANDARD PLAN 541. POLE AND FIXTURE TO BE BLACK GLOSS SMOOTH.
4	SIGN ENCLOSURE	(2)	(2)	21W LED	277	359	QTL_VERS-04-SW-3.0HE-30-PENC-25D-N/A-S2-BW24-CLS-WH-CL2-CC-ST-88.49-O	NA	NA	NA	NA	EX LTG (S3)	CONTRACTOR SHALL INSTALL FOUR (4) VERS-GRAZER LINEAR LIGHTS PER MANUFACTURER RECOMMENDATIONS.

(1) NORTHING AND EASTING ARE APPROXIMATE. CONTRACTOR SHALL CONFIRM ADJUSTMENT WITH CITY INSPECTOR PRIOR TO IMPLEMENTING.
(2) VERS-GRAZER LINEAR FIXTURES WILL BE PLACED WITHIN THE SIGN ENCLOSURE.
(3) MATCH KIM LIGHTING COLOR BLACK GLOSS SMOOTH (BLS).
(4) OR APPROVED EQUAL.
(5) OR APPROVED EQUAL HINGED POLE.

CALCULATION SUMMARY

CALCULATION AREA	DESIGN CRITERIA: MIN. AVG. MAINTAINED (FC)	DESIGN CRITERIA: MAX. UNIFORMITY RATIO (AVG. /MIN.)
	TARGET / ACTUAL	TARGET / ACTUAL
PLAZA LIGHTING	4.00 / **6.19**	10.00:1 / **4.42:1**

ILLUMINATION LEGEND

EXISTING	NEW	DESCRIPTION
		JUNCTION BOX TYPE 1,2,8
		COMPOSITE HANDHOLE
		ROADWAY SCALE LIGHT
		PEDESTRIAN SCALE LIGHT
		TYPE 3 SIGNAL POLE
		CONTROLLER CABINET
		UPS CABINET
		SERVICE CABINET
		ELECTRICAL VAULT
		LUMEN PANELS
		CONDUIT/CONDUCTOR
		POLE NUMBER
		CONSTRUCTION NOTE
		WIRE NOTE

ILLUMINATION CONSTRUCTION NOTES (THIS SHEET ONLY)

1. CONSTRUCT TYPE A FOUNDATION PER CITY OF MOUNTLAKE TERRACE STANDARD PLAN 541, SHEET IL-02. FURNISH AND INSTALL NEW LUMINAIRE AND POLE PER ILLUMINATION POLE SCHEDULE, THIS SHEET. CONTRACTOR SHALL VERIFY BOLT PATTERN BEFORE POURING FOUNDATION. TOP OF FOUNDATION TO BE BELOW 5" THICK CIP PAVING. SET HEIGHT OF ANCHOR BOLTS SUFFICIENT TO ATTACHED POLE ON TOP OF CIP, SEE SHEET L04. INSTALL GFCI RECEPTACLES ON PEDESTRIAN SCALE POLE. SEE ANCHOR BOLT & LUMINAIRE ATTACH ANGLE DETAIL, SHEET IL-02.
2. REMOVE EXISTING JUNCTION BOX AND INSTALL NEW TYPE 2 JUNCTION BOX WITH SKID-RESISTANT LID, PER WSDOT STANDARD PLAN J-40.10, SHEET IL-02. EXTEND NEW ILLUMINATION CONDUIT TO NEW JUNCTION BOX. SPLICE NEW ILLUMINATION CONDUCTORS WITH NEW ILLUMINATION CONDUCTORS WITH CITY APPROVED SPLICE KIT IN NEW JUNCTION BOX.
3. EXISTING PEDESTRIAN SCALE LIGHT TO REMAIN. PROTECT DURING CONSTRUCTION.
4. EXISTING TYPE 3 SIGNAL POLE TO REMAIN. PROTECT DURING CONSTRUCTION.
5. INSTALL NEW COMPOSITE JUNCTION BOX IN PLANTER AREA, PER HIGHLINE DETAIL, SHEET IL-03. SHOWN SCHEMATICALLY.
6. FURNISH AND INSTALL FOUR (4) VERS-GRAZER LINEAR FIXTURES IN SIGN ENCLOSURE PER ILLUMINATION POLE SCHEDULE, THIS SHEET, AND DETAILS, SHEET IL-03. FASTEN VERS-GRAZER LINEAR FIXTURES TO MOUNTING BRACKETS (TWO ON THE TOP AND TWO ON THE BOTTOM) PER MANUFACTURER'S RECOMMENDATION. CONTRACTOR SHALL COORDINATE WITH CITY AND MANUFACTURER TO DETERMINE WIRELESS DIMMING SYSTEM AND OTHER AVAILABLE OPTIONS/ACCESSORIES DESIRED BY THE CITY. SIGN SHALL HAVE DEDICATED 20 AMP CIRCUIT
7. FURNISH AND INSTALL Q-VAULT-5 PER DETAIL, SHEET IL-03. FURNISH AND INSTALL TWO (2) Q-SET-ELED-100-UNV/24-0-10V POWER SUPPLIES PER MANUFACTURER'S RECOMMENDATION. CONTRACTOR SHALL COORDINATE WITH MANUFACTURER FOR INSTALLATION INCLUDING CONDUCTORS (SIZE, QUANTITY) TO VERS-GRAZER LINEAR FIXTURES AND MAKING FINAL CONNECTION TO VERS-GRAZER LINEAR FIXTURES. TAMPER RESISTANT SCREWS (TORK) TO BE SUPPLIED BY QTL LIGHTING IN LIEU OF THE STANDARD HARDWARE.
8. INSTALL CONDUIT ALONG BACK OF COLUMN TO BACK OF SIGN. BORE HOLE IN BACK OF SIGN ENCLOSURE FOR CONDUIT INSTALLATION. CONTRACTOR SHALL VERIFY THAT PLACEMENT OF HOLE/CONDUIT SO IT DOES NOT OBSTRUCT OR INTERFERE WITH LOCATION OF LUMEN PANEL.
9. EXISTING SERVICE CABINET TO REMAIN. CONNECT NEW PLAZA ILLUMINATION CONDUCTORS TO THREE (3) SPARE CIRCUITS/CONTACTORS AND ROUTE THROUGH EXISTING CONDUIT AND JUNCTION BOXES TO NEW JUNCTION BOX NEAR POLE 2. CONTRACTOR SHALL COORDINATE WITH CITY OF MOUNTLAKE TO DETERMINE WHICH THREE (3) SPARES TO USE.
10. EXISTING ROADWAY SCALE LIGHT TO REMAIN. PROTECT DURING CONSTRUCTION.
11. INSTALL NEW CONDUIT STUB AND CAP INSIDE TWIG BENCH AREA.

NO.	REVISION COMMENTS	BY	REVIEW	DATE

DESIGNER | DRAWN BY | CHECKED BY

ELYSE M. STEMMLER — STATE OF WASHINGTON — 60135 — REGISTERED PROFESSIONAL ENGINEER
03-06-2026

CITY OF MOUNTLAKE TERRACE
TRANSIT CONNECTION CORRIDOR
PLAZA LIGHTING

TENW
520 KIRKLAND WAY, SUITE 100
KIRKLAND, WA, 98033
ELYSE STEMMLER, P.E.
PRINCIPAL
ELYSE@TENW.COM
425-223-0851

TENW 2022-232
PROJECT NUMBER

N
0 5 10 20 30
SCALE IN FEET

CALL BEFORE YOU DIG 1-800-424-5555

IL-01
DRAWING NO.
SHEET 28 OF 31

© 2026 OTAK, INC.

LIST

KIM LIGHTING

DATE: | LOCATION:

TYPE: | PROJECT:

CATALOG #:

WP9SA2 OR APPROVED EQUAL

ARCHITECTURAL AREA/SITE

Warp9

FEATURES

- TIR Strike Optics
- Patented low profile luminaire
- Available in Monochromatic Amber, 2700K, 3000K, 3500K, 4000K and 5000K
- Type 1, 2, 3, 4, 4W, SQ, L, and R distributions
- 0 - 10V dimming drivers standard
- IP65 optical assembly

RELATED PRODUCTS

Ouro Pavilion PGL8

CONTROL TECHNOLOGY

NX LIGHTING CONTROLS LIGHTGRID

SPECIFICATIONS

CONSTRUCTION

- One piece die-cast housing, low copper (<0.6% Cu) Aluminum Alloy with integral cooling ribs over the optical chamber and electrical compartment
- Solid barrier wall separates optical and electrical compartments
- Double-thick wall with gussets on the support-arm mounting end
- Housing forms a half cylinder with 55° front face plane providing a recess to allow a flush single-latch detail
- All hardware is stainless steel or electro-zinc plated steel
- Finish: fade and abrasion resistant, electrostatically applied, thermally cured, triglycidel isocyanurate (TGIC) polyester powdercoat
- One-piece die-cast, low copper (<0.6% Cu) aluminum alloy lens frame with 1" minimum depth around the gasket flange
- Optional clear 1/8" thick tempered glass lens retained by eight steel clips with full silicone gasketing around the perimeter
- Optional, fixture supplied with a one-piece flat, clear, UV stabilized polycarbonate, fully gasketed, replacing the standard tempered glass lens. CAUTION: Use only when vandalism is anticipated to be high. Useful life is limited by UV discoloration from sunlight. A program of regular inspection and periodic replacement is highly recommended to maintain optimum fixture performance
- One-piece extruded aluminum arm with internal bolt guides and fully radiussed top and bottom
- Luminaire-to-pole attachment is by internal draw bolts, and includes a pole reinforcing plate with wire strain relief
- Arm is circular cut for specified round pole

CONSTRUCTION (CONTINUED)

- Optional cast, low copper aluminum horizontal slip-fitter with adaptor plate to secure the luminaire to 2" IPS pipe size arms
- Optional cast aluminum wall mount plate assembly. Attaches to the wall over the junction box. Luminaire attaches to the wall plate

OPTICS

- Optical cartridge system consisting of a die cast heat sink, LED Total Internal Reflection (TIR) optics, gasket and bezel/Lens
- Molded silicone gasket ensures a weather-proof seal around each individual LED
- Features revolutionary individual LED optical control based on high performance TIR optical designs
- Optional BackLight Control for complete control of unwanted backlight
- IP65 Optical assembly
- Type 1, 2, 3, 4, 4W, SQ, R, and L standard distributions
- Available in Monochromatic Amber, 2700K, 3000K, 3500K, 4000K and 5000K
- Die-cast, low copper aluminum heat sink modules provide thermal transfer at PCB level
- Anodized aluminum heat sink modules

INSTALLATION

- Fixtures must be grounded in accordance with national, state and/or local electrical codes. Failure to do so may result in serious personal injury

ELECTRICAL

- Dimming range from 10% to 100% through the use of standard 0-10V interface on the programmable driver

ELECTRICAL (CONTINUED)

- Modular wiring harness in the service area provides user access to the dimming circuitry
- Optional factory programmed dimming profile
- Surge protection: 10kV surge suppression
- SF for 120, 277, 347 Line volts
  DF for 208, 240, 480 Line volts

CONTROLS

- 7-pin Receptacle and Button Photocell

CERTIFICATIONS AND LISTINGS

- Listed to UL1598 and CSA C22.2#250.0-24 for wet location and 40°C ambient temperature
- IDA approved, 3000K and warmer CCTs only
- ANSI C136.31-2010 3G Vibration tested and compliant
- RoHS compliant
- This product qualifies as a "designated country construction material" per FAR 52.225-11 Buy American-Construction Materials under Trade Agreements effective 6/06/2020. See Buy American Solutions

WARRANTY

- 5 year warranty

KEY DATA	
Lumen Range	1,783–14,924
Wattage Range	31.6–116.5
Efficacy Range (LPW)	55.8–134.4
Reported Life (Hours)	L70/60,000
Weight	30 lbs 13.6 kg
EPA Side View	.52

© 2022 KIM Solutions, Inc. All rights reserved. Information and specifications subject to change without notice. All values are design or typical values when measured under laboratory conditions.

KIM LIGHTING

DATE: | LOCATION:

TYPE: | PROJECT:

CATALOG #:

WP9SA2

ARCHITECTURAL AREA/SITE

ORDERING GUIDE

CATALOG # | **Example:** 1SA-WP9SA2-54L-405-3K7-3-CLR-SQ-UNV-BLT-7PR-SF

1SA	WP9SA2	54L-405	4K7	3		
Mounting	**Model**	**LED Engine**	**CCT/CRI** [1]	**Distribution**	**Lens Options**	**House Side Shield**
1SA Single Arm	WP9SA2 Warp9 2.0 Small Fixture	27L-350 27 LEDs • 3,000 Lumens	AM [7] Monochromatic Amber	1 Type I	(Blank) No Lens	BC [1] Backlight Control
1W Wall Mount		54L-405 54 LEDs • 7,500 Lumens	27K8 [2] 2700K, 80CRI	2 Type II	CLR Clear Glass Lens	
HSF Horizontal Slipfitter		81L-450 81 LEDs • 12,500 Lumens	27K9 [3] 2700K, 90CRI	3 Type III	CP Clear Polycarbonate Lens	
			3K7 3000K, 70CRI	4 Type IV Forward		
		Equivalent WPS4P35 = 54L-405 WPS4P70 = 81L-450 WPS4E35 = 54L-405	3K8 [2] 3000K, 80CRI	4W Type IV Wide		
			3K9 [3] 3000K, 90CRI	SQM Type V Square Medium		
			35K8 [2] 3500K, 80CRI	R Corner Right		
			35K9 [3] 3500K, 90CRI	L Corner Left		
			4K7 4000K, 70CRI			
			4K8 [2] 4000K, 80CRI			
			4K9 [3] 4000K, 90CRI			
			5K7 5000K, 70CRI			
			5K8 [2] 5000K, 80CRI			
			5K9 [3] 5000K, 90CRI			

UNV	BLS	7PR			
Mounting Options	**Voltage**	**Fixture Finish**	**Photocell Options**	**Fuse Options**	**Other Options**
VSF [5] Vertical Slipfitter Mount for 2" pipe tenon (2x3.8"O.D. x 4" LONG)	UNV 120-277V	BLS Black Gloss Smooth	7PR 7-Pin Photocell Receptacle [4]	SF Single Fuse 120, 277, 347 Line Volts	TPL Tamper Resistant Latch
SVSF [5] Vertical Slipfitter Mount square for 2" pipe tenon (2x3.8"O.D. x 4" LONG)	347 347V	BLT Black Matte Textured	PC Button Photocell [6]	DF Double Fuse 208, 240, 480 Line Volts	
3 Side Arm Mount 3" O.D. Pole	480 480V	DBS Dark Bronze Gloss Smooth			
3.38 Side Arm Mount 3.38" O.D. Pole		DBT Dark Bronze Matte Textured			
3.5 Side Arm Mount 3.5" O.D. Pole		GTT Graphite Matte Textured			
3.75 Side Arm Mount 3.75" O.D. Pole		LGS Light Grey Gloss Smooth			
4 Side Arm Mount 4" O.D. Pole		LGT Light Grey Matte Textured			
4.5 Side Arm Mount 4.5" O.D. Pole		PSS Platinum Silver Smooth			
5 Side Arm Mount 5" O.D. Pole		VGT Verde Green Matte Textured			
6 Side Arm Mount 6" O.D. Pole		WHS White Gloss Smooth			
SQ Side Arm Mount Square Pole		WHT White Matte Textured			
		Color Option			
		CC Custom Color			

Control Options	Control Accessories [8]	
SCH-R Round Pole Mounted (Occupancy Sensor up to 16' to 30')	WIR-RME-L	LightGRID™ 7-pin Module
SCH-S Square Pole Mounted (Occupancy Sensor up to 16' to 30')	NXOFM-1R1D-UNV	NX 7-Pin Twist-Lock® with NX Networked Wireless Radio, Integral Automatic Dimming Photocell, Integral Single Pole Relay with Dimming, and Bluetooth Programming

Notes:
1 Back Light Control not available for Type SQ and Type SW
2 See Lumen Multiplier chart on Page 13 for Lumen scaling factor. Consult factory for additional details.
3 Not available with other sensor or wireless control options
6 Setup MacAdam Ellipse Binning is standard. Consult factory for MacAdam Ellipse Binning
7 Turtle Friendly
8 For all arm configurations, please refer to page 4, VSF/SVSF options ordered separately.
9 Not available in 480V.

© 2022 KIM Solutions, Inc. All rights reserved. Information and specifications subject to change without notice. All values are design or typical values when measured under laboratory conditions.

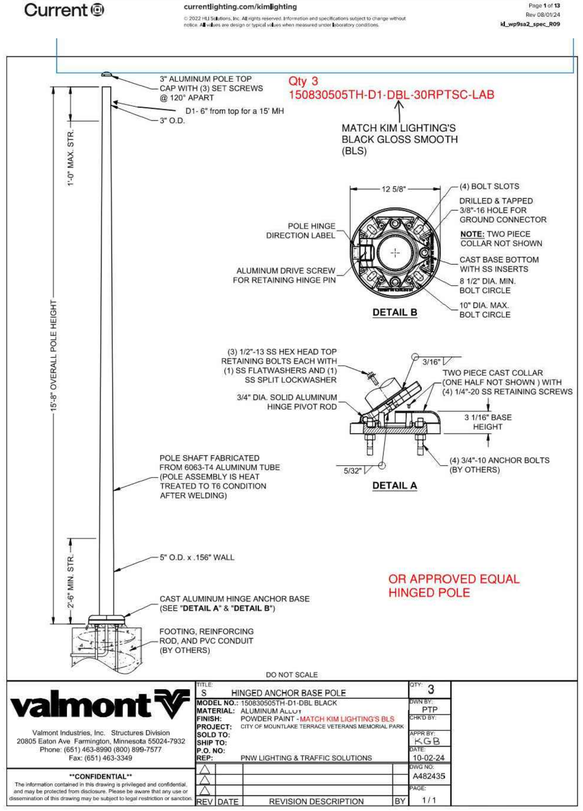

valmont

Valmont Industries, Inc. Structures Division
20805 Eaton Ave Farmington, Minnesota 55024-7932
Phone: (651) 463-8990 (800) 899-7577
Fax: (651) 463-3349

"CONFIDENTIAL"

The information contained in this drawing is privileged and confidential, and may be protected from disclosure. Please be aware that any use or dissemination of this drawing may be subject to legal restriction or sanction.

TITLE:	HINGED ANCHOR BASE POLE
QTY:	3
MODEL NO.:	150830505TH-D1-DBL BLACK
MATERIAL:	ALUMINUM ALLOY
FINISH:	POWDER PAINT - MATCH KIM LIGHTING'S BLS
PROJECT:	CITY OF MOUNTLAKE TERRACE VETERANS MEMORIAL PARK
SOLD TO:	
SHIP TO:	
P.O. NO:	
REF:	PNW LIGHTING & TRAFFIC SOLUTIONS
DWN BY:	PTP
CHK'D BY:	
APP'R BY:	KGB
DATE:	10-02-24
DWG NO:	A482435
SIZE:	
SHEET:	1 / 1

REV	DATE	REVISION DESCRIPTION	BY
1			
2			
3			

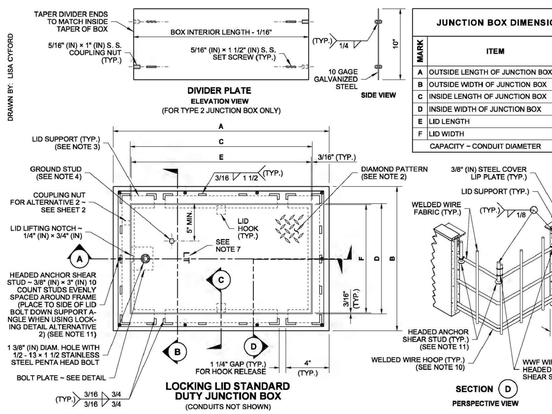

JUNCTION BOX DIMENSION TABLE			
MARK	ITEM	BOX TYPE	
		TYPE 1	TYPE 2
A	OUTSIDE LENGTH OF JUNCTION BOX	22"	33"
B	OUTSIDE WIDTH OF JUNCTION BOX	17"	22 1/2"
C	INSIDE LENGTH OF JUNCTION BOX	18" – 19"	28" – 29"
D	INSIDE WIDTH OF JUNCTION BOX	13" – 14"	17" – 18"
E	LID LENGTH	17 5/8"	28 5/8"
F	LID WIDTH	12 5/8"	18 1/8"
	CAPACITY – CONDUIT DIAMETER	6"	12"

NOTES

1. All box dimensions are approximate. Exact configurations vary among manufacturers.
2. Minimum lid thickness shown. Junction Boxes installed in sidewalks, walkways, and shared-use paths shall have a slip-resistant coating on the lid and lip cover plate, and shall be installed with the surface flush with and matched to the grade of the sidewalk, walkway, or shared-use path. The non-slip lid shall be identified with permanent markings on the underside, indicating the type of surface treatment (see Contract Documents for details) and the year of manufacture. The permanent marking shall be 1/8" (in) line thickness formed with a mild steel weld bead and shall be placed prior to hot-dip galvanizing.
3. Lid support members shall be 3/16" (in) minimum thick steel C, L, or T shape, welded to the frame.
4. A 1/4-20 NC × 3/4" (in) stainless steel ground stud shall be welded to the bottom of the lid; include (2) stainless steel nuts and (2) stainless steel flat washers.
5. Bolts and nuts shall be liberally coated with anti-seize compound.
6. Equipment Bonding Jumper shall be # 8 AWG min. × 4' (ft) of tinned braided copper.
7. The System Identification letters shall be 1/8" (in) line thickness formed with a mild steel weld bead. See Cover Marking detail. Grind off diamond pattern before forming letters. For System Identification details, see **Standard Specification 9-29.2(4)**.
8. When required in the Contract, provide a 10" (in) x 27 1/2" (in), 10 gage divider plate, complete, with fasteners, in each Type 2 Junction Box where specified.
9. When required in Contract, provide a 12" (in) deep extension for each Type 2 Junction Box where specified.
10. See the **Standard Specifications** for alternative reinforcement and class of concrete.
11. Headed Anchor Shear Studs must be welded to the Steel Cover Lip Plate and wire tied in two places to the vertical Welded Wire Fabric when in contact with each other. Wire tie all other Headed Anchor Shear Studs to the horizontal Welded Wire Fabric.
12. Lid Bolt Down Attachment Tab provides a method of retrofitting by using a mechanical process in lieu of welding. Attachment Tab shown depicts a typical component arrangement; actual configurations of assembly will vary among manufacturers. See approved manufacturers' shop drawings for specifics.
13. Unless otherwise noted in the plans or approved by the Engineer, Junction Boxes, Cable Vaults, and Pull Boxes shall not be placed within the sidewalks, walkways, shared use paths, traveled ways or paved shoulders. All Junction Boxes, Cable Vaults, and Pull Boxes placed within the traveled way or paved shoulders shall be Heavy-Duty.
14. Distance between the top of the conduit and the bottom of the Junction Box lid shall be 6" (in) min. to 8" (in) max. for final grade of new construction only. See **Standard Specification 8-20.3(5)**. Where adjustments are to be made to existing Junction Boxes, or for interim construction stages during the contract, the limits shall be from 6" (in) min. to 10" (in) max. See **Standard Specification 8-20.3(6)**.

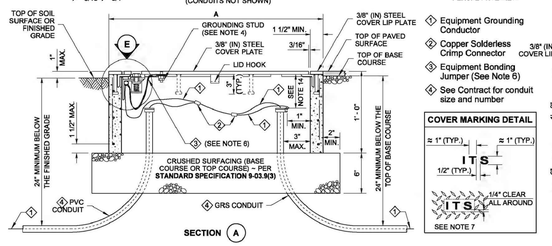

THEODORE JOSEPH BAILEY STATE OF WASHINGTON 21920 REGISTERED PROFESSIONAL ENGINEER

Bailey, Ted Apr 25 2016 9:32 AM

LOCKING LID STANDARD DUTY JUNCTION BOX TYPES 1 & 2
STANDARD PLAN J-40.10-04

SHEET 1 OF 2 SHEETS

APPROVED FOR PUBLICATION
Carpenter, Jeff Apr 28 2016 3:32 PM
STATE DESIGN ENGINEER
Washington State Department of Transportation

WIRING NOTES:

1. *QUICK DISCONNECT CONNECTORS SHALL BE INSTALLED AT ALL POLES SUPPORTING A LUMINAIRE. DISCONNECTS SHALL ONLY BE INSTALLED AT THE BASE OF THE POLE AND NOT IN THE JUNCTION BOX. THE CONNECTORS USED SHALL BE SEC 1781-SP FOR THE UNFUSED CONNECTORS.*
2. *INSTALLATION SHALL CONFORM TO DETAILS IN WSDOT STANDARD PLANS, EXCEPT AS NOTED OR SPECIFIED.*
3. *POLE AND BRACKET CABLE SHALL BE USED BETWEEN THE DISCONNECTS AND LUMINAIRE AND MUST BE SECURELY SUPPORTED AT THE TOP OF THE LUMINAIRE EXTENSION.*
4. *WIRE CONNECTIONS TO BE CRIMPED AND SHRINK-WRAPPED. CRIMP SPLICES SHALL BE INSTALLED WITH AN APPROVED CRIMPING TOOL FOR THE TYPE AND SIZE OF CRIMP SPLICE USED. PLIERS AND SIMILAR MULTI-PURPOSE TOOLS MAY NOT BE USED. HEAT SHRINK TUBING SHALL HAVE SEPARATE PARTS FOR EACH CONDUCTOR AND RUBBER ELECTRICAL MASTIC TAPE SHALL BE WRAPPED AROUND EACH CONDUCTOR TO ENSURE A WEATHER-PROOF SEAL. HEAT SHRINK TUBING SHALL EXTEND A MINIMUM OF ONE INCH OVER THE ORIGINAL WIRE INSULATION OF EACH WIRE IN THE SPLICE. RIGID SPLICE ENCLOSURES SHALL BE CENTERED OVER THE CRIMPED CONNECTION.*

INSTALLATION NOTES:

1. *ALL MATERIAL AND WORK SHALL BE IN ACCORDANCE WITH THE REQUIREMENTS OF THE STATE OF WASHINGTON, DEPARTMENT OF TRANSPORTATION, STANDARD SPECIFICATIONS AND CURRENT AASHTO STANDARD SPECIFICATIONS FOR STRUCTURAL SUPPORTS, HIGHWAY SIGNS, LUMINAIRES AND TRAFFIC SIGNALS.*
2. *TYPE A FOUNDATION IS DESIGNED FOR 2000 PSF AVERAGE SOIL LATERAL BEARING PRESSURE. TYPE B IS DESIGNED FOR 1500 PSF.*
3. *ROUND AND SMOOTH ALL EDGES ALONG WIRE-WAY TO PROTECT CONDUCTORS.*
4. *THE TOP OF THE SLIP BASE OR ANCHOR BOLTS SHALL NOT EXTEND MORE THAN 4" ABOVE GROUNDLINE.*
5. *THE TOP OF THE ANCHOR BOLTS SHALL BE THREADED A MIN. OF 5 1/4" AND GALVANIZED IN ACCORDANCE WITH AASHTO M111 AFTER THREADING.*
6. *USE STEEL LIGHT STANDARD FOUNDATION TYPE A ON LEVEL GROUND OR SLOPES NOT EXCEEDING 4H:1V. USE TYPE B FOR SLOPES STEEPER THAN 4H:1V, BUT NOT EXCEEDING 2H:1V. SLOPES STEEPER THAN 2H:1V SHALL REQUIRE A SPECIAL DESIGN.*

GENERAL NOTES:

1. *ALL STEEL LIGHT STANDARDS ARE FABRICATED IN ACCORDANCE WITH THE WSDOT STANDARD SPECIFICATIONS AND THE CONTRACT PROVISIONS.*
2. *SEE WSDOT STANDARD PLAN J-28.50 FOR HAND HOLE DETAILS.*
3. *ONE PHOTO CELL AND ONE BYPASS SWITCH SHALL BE INSTALLED PER LIGHTING SYSTEM. SEE WSDOT STANDARD PLANS FOR METER BASE, SERVICE CABINET, AND WIRING REQUIREMENTS. PHOTO CELL SHALL BE INSTALLED ON POLE NEAREST TO THE SERVICE CABINET AND SHALL MEET WSDOT STD SPECIFICATIONS SECTION 9-29.11(2).*
4. *BACKFILL 12" AROUND THE POLE WITH CRUSHED SURFACING BASE COURSE, MEETING WSDOT STANDARD COMPACTED TO 95% MAX. DENSITY.*

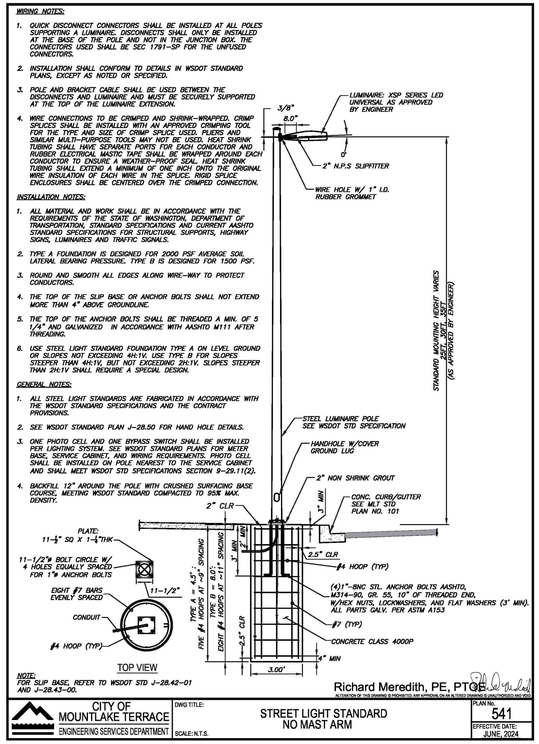

Richard Meredith, PE, PTOE
ALTERATION OF THIS DRAWING IS PROHIBITED AND APPROVAL ON AS ALTERED DRAWING IS UNAUTHORIZED AND VOID

CITY OF MOUNTLAKE TERRACE
ENGINEERING SERVICES DEPARTMENT

DWG TITLE: STREET LIGHT STANDARD NO MAST ARM

SCALE: N.T.S.

PLAN No. 541

EFFECTIVE DATE: JUNE, 2024

ANCHOR BOLT & LUMINAIRE ATTACH ANGLE

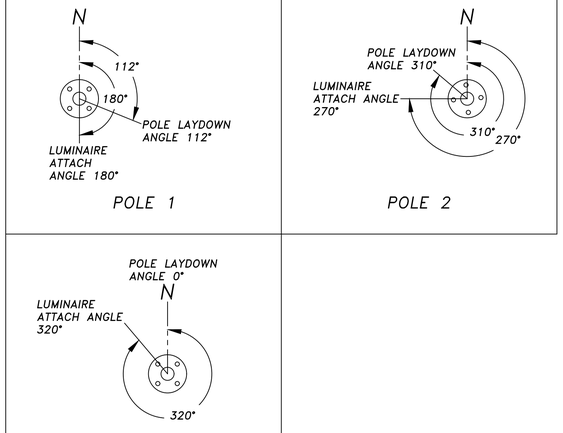

DESIGNER | DRAWN BY | CHECKED BY

NO.	REVISION COMMENTS	BY	REVIEW	DATE

ELYSE M. STEMMLER STATE OF WASHINGTON 42135 REGISTERED PROFESSIONAL ENGINEER
03-06-2026

CITY OF MOUNTLAKE TERRACE
TRANSIT CONNECTION CORRIDOR
PLAZA LIGHTING DETAILS

TITLE

TENW

520 KIRKLAND WAY, SUITE 100
KIRKLAND, WA, 98033
ELYSE STEMMLER, P.E.
PRINCIPAL
ELYSE@TENW.COM
425-223-0851

TENW 2022–232
PROJECT NUMBER

IL–02
DRAWING NO.

SHEET 29 OF 31

© 2026 OTAK, INC.

CALL BEFORE YOU DIG 1–800–424–5555

LIST

VERS-GRAZER (04) STATIC WHITE

24VDC Linear Fixtures - Surface & Recessed

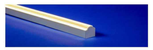

- Optically enhanced VERSatile fixture with narrow grazing properties ranging from 12" to 36"
- The high-quality lens features a proprietary diffusing agent for superior beam control and clean edges
- Features integrated metal endcaps
- Mounting options include a concealed or magnetic clip
- With an internal White Optics coating, the fixture achieves greater lumen output
- Durable anodized aluminum housings
- Consult factory for field assembly options
- Can be suitable for exterior use when specified as wet, contact factory for more information
- Optional external louver accessory available in white or black for added glare control

INFORMATION REQUIRED FOR LIGHTING SCHEDULE

1 PRODUCT	2 WATTS/FT	3 CCT	4 RATED	5 LENS	6 EXTERNAL LOUVER
VERS-04-SW	3.0HE	30	PENC	25D	N/A

ADDITIONAL INFORMATION REQUIRED TO ORDER

7 WIRE INPUT/ OUTPUT	8 CONNECTOR/ WIRE IN	9 CONNECTOR/ WIRE OUT	10 WIRE COLOR	11 MOUNTING	12 FINISH	13 LENGTH (IN)	14 EXACT/ OPTIMAL
S2	BW24	CLS	WH	CL2	CC	ST	88.49	O

1 PRODUCT

VERS-04-SW

See following pages for compatible power supplies.

2 WATTS/FT

1.5	1.5W/ft
3.0	3.0W/ft
4.0	4.0W/ft
5.0	5.0W/ft
1.5HE	1.5W/ft HE
3.0HE	3.0W/ft HE
4.0HE	4.0W/ft HE
5.0HE	5.0W/ft HE
1.5	1.5W/ft
3.0	3.0W/ft
4.0	4.0W/ft
5.0	5.0W/ft

3 CCT

20	2000K
22	2200K
24	2400K
27	2700K
30	3000K
35	3500K
40	4000K
24	2400K
27	2700K
30	3000K
35	3500K
40	4000K
20	2000K
22	2200K
24	2400K
27	2700K
30	3000K
35	3500K
40	4000K

4 RATED

DRY IP20

DMP IP54
PENC IP67
PENC=perfectly encapsulated; N/A for TBC-dba

WET IP67
Can be suitable for exterior use, contact factory for more information

5 LENS

25D Optical 25°
32N Grazer

For representation of LED visibility, see Glare Visibility section on following pages. For beam angles, see Photometric Performance section on following pages

6 EXTERNAL LOUVER

L3-WH	White Plastic
L3-BK	Black Plastic
L2-ST	Satin Anodized Aluminum
L2-BK	Black Anodized Aluminum
L2-WH	White Powder Coated Aluminum
N/A	No Louver

Plastic Louvers come in 12" lengths, multiple pieces will be used to match fixture length. Aluminum louvers come in maximum 96" lengths and will be cut to match fixture length. White and custom painted finishes are not compatible with LD external louvers.

7 WIRE INPUT/OUTPUT

SINGLE (Input only)
S1 End Feed
S2 Bottom Feed
S3 Left Side Feed
S4 Right Side Feed

When using TBC Mounting a bare wire S2 wire feed is recommended. See install instructions for details.

PASS THROUGH (Input/output)
P1 End Feed
P2 Bottom Feed
P3 Left Side Feed
P4 Right Side Feed

Pass Through options are not available for PENC rating. When using TBC Mounting a bare wire P2 wire feed is recommended. See install instructions for details.

8 CONNECTOR/WIRE IN

BW	Bare Wire (Standard 36")	
CON6	Connector 6"	
CON24	Connector 24"	

BW: Standard length is 36". Max length is 120". Request custom length by writing in part number next to BW (example: BW48)

BW	Bare Wire (Standard 36")	
CON6	Connector 6"	
CON24	Connector 24"	

BW: Standard length is 36". Max length is 120". Request custom length by writing in part number next to BW (example: BW48)

9 CONNECTOR/WIRE OUT

CLS Closed End (No feed)

BW	Bare Wire (Standard 36")	
CON6	Connector 6"	
CON24	Connector 24"	

BW: Standard length is 36". Max length is 120". Request custom length by writing in part number next to BW (example: BW48)

10 WIRE COLOR

WH	White
BK	Black

11 WIRE TYPE

CL2	Class 2
CL2P	Plenum Rated

CL2P only available with bare wire leads (BW)

12 MOUNTING

CC	Concealed Clip
MG	Magnet
TBC-03	9/16" Flat T8-Grid
TBC-04	15/16" Flat or Tegular T8-Grid
TBC-05	9/16" Tegular T8-Grid or 9/16" Flat T8-Grid, with External Louver
TBC-06	9/16" Tegular T8-Grid, with External Louver
TBC-07	15/16" Flat T8-Grid, with External Louver
TBC-08	15/16" Tegular T8-Grid, with External Louver

13 FINISH

ST	Satin
BK	Black
BZ	Bronze
WH	White
CU	Custom

White and custom finishes are not compatible with external louvers. Custom finishes require a longer lead time, consult factory.

14 LENGTH (IN)

Minimum length is 12", maximum length is 96" not including end caps. Contact us for lengths under 12".

15 EXACT/OPTIMAL

O	Optimal Illumination
E	Exact Specified Length

Exact fixtures match the exact length you specify, but they may have slim spots at the ends. Optimal fixtures are slightly longer than the length specified, but provide full illumination from end to end. See Exact/Optimal Fixtures Length charts.

5 year warranty | Warranty only valid with QTL power supplies | Field modifications void warranty | Data subject to change, all data has +/- 5% tolerance | Suitable for installation in the storage area of a clothes closet when using wattage of 4.0W/ft or less

© 2025 QTL. All rights reserved | 155 Hill St. Milford, CT 06460 | 203-357-8777 | sales@QTLlighting | www.QTLlighting

Specification subject to change. Rev-08-08-25

VERS-GRAZER (04) STATIC WHITE

24VDC Linear Fixtures - Surface & Recessed

15 EXACT/OPTIMAL FIXTURE LENGTH

Exact fixtures are the exact length specified. Optimal fixtures' length is rounded down based on LED cut points to allow the fixture to be illuminated end to end. For runs with multiple fixtures that need to fill a specific length, it's recommended to order all optimal fixtures with an exact fixture at the end of the run.

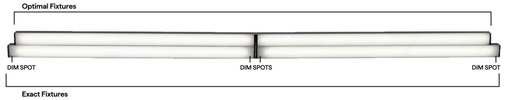

SW DRY, DMP, PENC LENGTHS BY INCH

Available in any length in between 12" and 96" not including end caps, chart below shows example lengths. Exact fixtures are the length specified. Optimal fixtures' length is rounded down with illumination end to end. All fixtures' tolerance is +0 ~ 1/8". Consult factory for lengths under 12".

EXACT LENGTH

Requested Length	Potential dim spot on either end of fixture
12"	.5"
13"	.5"
14"	.5"
15"	.5"
16"	.5"
17"	.5"
18"	.5"
19"	.5"
20"	.5"
21"	.5"
22"	.5"
23"	.5"
24"	.5"
36"	.5"
48"	.5"
60"	.5"
72"	.5"
84"	.5"
96"	.5"

OPTIMAL LENGTH

Requested Nominal Length	S1 & S2	P1 & P2	S3 & S4	P3 & P4
	S1 End Feed, S2 Bottom Feed	P1 End Feed, P2 Bottom Feed	S3 Side Feed - Left, S4 Side Feed - Right	P3 Side Feed - Left, P4 Side Feed - Right
12"	11.49"	11.74"	11.74"	11.64"
13"	12.49"	12.74"	12.74"	12.64"
14"	13.49"	13.74"	13.74"	13.64"
15"	14.49"	14.74"	14.74"	14.64"
16"	15.49"	15.74"	15.74"	15.64"
17"	16.49"	16.74"	16.74"	16.64"
18"	17.49"	17.74"	17.74"	17.64"
19"	18.49"	18.74"	18.74"	18.64"
20"	19.49"	19.74"	19.74"	19.64"
21"	20.49"	20.74"	20.74"	20.64"
22"	21.49"	21.74"	21.74"	21.64"
23"	22.49"	22.74"	22.74"	22.64"
24"	23.49"	23.74"	23.74"	23.64"
36"	35.49"	35.74"	35.74"	35.64"
48"	47.49"	47.74"	47.74"	47.64"
60"	59.49"	59.74"	59.74"	59.64"
72"	71.49"	71.74"	71.74"	71.64"
84"	83.49"	83.74"	83.74"	83.64"
96"	95.49"	95.74"	95.74"	95.64"

88.49"

© 2025 QTL. All rights reserved | 155 Hill St. Milford, CT 06460 | 203-357-8777 | sales@QTLlighting | www.QTLlighting

Specification subject to change. Rev-08-08-25

Q-SET-eLED+0-10V

12V or 24V DC Power Supply - 60W-200W

5 YEAR WARRANTY | Declare. | SAA & BABA

- Direct burial and outdoor rated electronic power supply, utilizing a electronic driver from Thomas Research
- 0-10V dimming modules
- Constant voltage output

1 PRODUCT	2 WATTAGE	3 PRIMARY VOLTAGE	4 SECONDARY VOLTAGE	5 CONTROL	6 OPTIONS
Q-SET-eLED	100W	UNV	24VDC	0-10V	

Sample Part Number: **Q-SET-eLED-100W-UNV-24VDC-0-10V-N/A**

1 PRODUCT

Q-SET-eLED

2 WATTAGE

60W 120W

100W 200W

3 PRIMARY VOLTAGE

UNV Universal

UNV Universal

4 SECONDARY VOLTAGE

12VDC

24VDC

5 CONTROL

0-10V 0-10V dimming

6 OPTIONS

PS Pool & Spa
N/A

COMPATIBLE LEDS

STATIC WHITE	
BWS4/L5-4.0	✓
BW24/4.0, BW-HE, BW-HE+	✓
SD-BWS4/1.0-4.0	✓
SD-BW24/HLO	✓
BW-IA	
SW-XT	✓

OTHER	
DW-HE Tunable Applications	
DW-HE Warm Dim Applications	
WD	✓
SC	✓
RGB	
RGBW, RGBW+HE	

SHEETS	
Q-SHEETS BW	
Q-SHEETS DW Tunable Applications	
Q-SHEETS DW Warm Dim Applications	
Q-SHEETS RGB	
Q-SHEETS RGBW	

MICRO 5	
MICRO 5 BW	✓
MICRO 5 DW Tunable Applications	
MICRO 5 DW Warm Dim Applications	
MICRO 5 RGB	

PRODUCT INFORMATION

- Limited output voltage and current, plus isolation for safe operation
- Dimmable w/additional 0-10V dimming module
- Fully potted driver(s) for moisture resistance
- Suitable for dry, damp, and wet locations
- Primary voltage - universal (120-277V)
- Wide operating temperature range: 4°F to 104°F
- Fits up to (2): 60W 12VDC or (2):100W 24VDC driver(s) and 0-10V dimming module(s) in the same housing
- 5 year warranty
- Class 2 output
- CSA #239924
- Low Voltage Lighting Systems
  - CSA Class 3426-04 and Class 3426-94
  - CSA Standard C22.2 No. 250.0-08 - Luminaires
  - ANSI/ UL Standard 2108 - Low Voltage Lighting System
- Landscape Lighting Systems
  - CSA Class 3425-15 and Class 3425-95
  - CSA Standard C22.2 No. 250.7-07 - Extra-Low-Voltage Landscape Lighting Systems
  - ANSI/ UL Standard 1838 - Low Voltage Landscape Lighting Systems
  - ANSI/ UL Standard 379-Power Units for Fountain, Swimming Pool, and Spa Luminaires

© 2025 QTL. All rights reserved | 155 Hill St. Milford, CT 06460 | 203-357-8777 | sales@QTLlighting | QTL.lighting

Specification subject to change. Rev-08-05-25

Q-SET-eLED+0-10V

12V or 24V DC Power Supply - 60W-200W

VOLTAGE DROP CHART

This product must be installed in accordance with the applicable installation code by a person familiar with the construction and operation of the product and the hazards involved.
If dimming with optional 0-10V dimming module, use a dimmer rated for 0-10V operation

VDC	Load Wattage (W)	Distance from PS for 5% Voltage Drop							
		10 AWG	12 AWG	14 AWG	16 AWG	18 AWG	20 AWG	22 AWG	24 AWG
12	12	571	359	226	142	89	56	35	22
	25	274	172	108	68	43	27	17	11
	60	114	72	45	28	18	11	7	4
24	17	806	507	319	200	126	79	50	31
	25	548	345	217	136	86	54	34	21
	40	342	215	135	85	54	34	21	13
	80	171	108	68	43	27	17	11	7
	100	137	86	54	34	21	14	9	5

	14 AWG	16 AWG	18 AWG	20 AWG	22 AWG	24 AWG
12	226	142	89	56	35	22
	108	68	43	27	17	11
	72	45	28	18	11	7
24	319	200	126	79	50	31
	217	136	86	54	34	21
	135	85	54	34	21	13
	85	54	34	21	14	9
	54	34	21	14	9	5

1 PRODUCT - DIMENSIONS

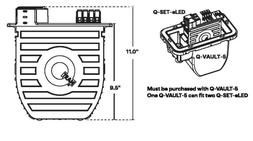

2 TECHNICAL INFORMATION

Wattage	Max Load (Watts)	Secondary Voltage	Max Prim Amps @ 120V	Max Prim Amps @ 277V
60W	1x60W	12VDC	0.80A	0.4A
120W	2x60W	12VDC	1.40A	0.6A
100W	1x100W	24VDC	1.1A	0.5A
200W	2x100W	24VDC	2.2A	1.0A

If any of the primary or secondary wiring is done outside of conduit, please consult factory for proper connectors and wire to maintain IP68 rating and warranty.

To maintain Class 2 wiring compliance, do not exceed 60 watts at 12VDC or 96 watts at 24VDC per fixture feed. Failure to do so will void fixture warranty and create a fire hazard.

HOUSING

- Dimensions: 11.0"L x 10.0"W x 2.5"D
- Q-VAULT-5 enclosure can fit up to two Q-SET-eLED
- Q-VAULT-5 is IP68 rated

PERFORMANCE

- Power supply shall be rated for outdoor and direct burial use in Q-VAULT-5 IP68 Listed direct burial enclosure
- Fully rated to operate low voltage load at listed wattage (No Derating Required)
- Limit voltage regulation to 5% or less of rated output voltage
- Universal input range of 120-277 Vrms
- CSA Class 3425-15 and Class 3425 95 - Landscape Lighting System Components
- CSA Class 3426 04 and Class 3426 94 - Low Voltage Lighting Systems
- Terminal blocks shall be made of tin plated copper with a voltage rating of 300V and a current rating of 50A
- Short Circuit Protection (SCP)
- Overload Protection (OLP)
- Live tested by manufacturer to ensure proper operation
- Housing for direct burial fixtures shall be IP68 Rated, with all sealing materials supplied by the manufacturer
- Housing for direct burial fixtures shall be rated for burial in soil, gravel and concrete

© 2025 QTL. All rights reserved | 155 Hill St. Milford, CT 06460 | 203-357-8777 | sales@QTLlighting | QTL.lighting

Specification subject to change. Rev-08-05-25

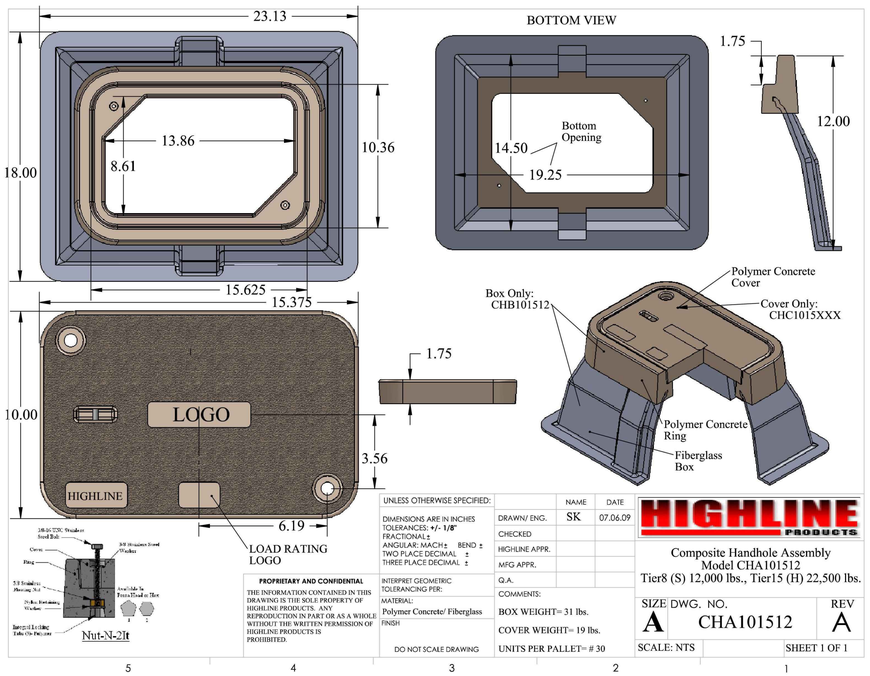

UNLESS OTHERWISE SPECIFIED:
DIMENSIONS ARE IN INCHES
TOLERANCES: +/- 1/8"
FRACTIONAL ±
ANGULAR: MACH ± BEND ±
TWO PLACE DECIMAL ±
THREE PLACE DECIMAL ±

INTERPRET GEOMETRIC TOLERANCING PER:
MATERIAL: Polymer Concrete/ Fiberglass
FINISH
DO NOT SCALE DRAWING

	NAME	DATE
DRAWN/ ENG.	SK	07.06.09
CHECKED		
HIGHLINE APPR.		
MFG APPR.		
Q.A.		

COMMENTS:
BOX WEIGHT= 31 lbs.
COVER WEIGHT= 19 lbs.
UNITS PER PALLET= # 30

HIGHLINE PRODUCTS

Composite Handhole Assembly
Model CHA101512
Tier8 (S) 12,000 lbs., Tier15 (H) 22,500 lbs.

SIZE	DWG. NO.	REV
A	CHA101512	A

SCALE: NTS | SHEET 1 OF 1

PROPRIETARY AND CONFIDENTIAL
THE INFORMATION CONTAINED IN THIS DRAWING IS THE SOLE PROPERTY OF HIGHLINE PRODUCTS. ANY REPRODUCTION IN PART OR AS A WHOLE WITHOUT THE WRITTEN PERMISSION OF HIGHLINE PRODUCTS IS PROHIBITED.

5 4 3 2 1

Q-VAULT-5

Accessories - Direct Burial

10 YEAR WARRANTY | 2008 lightfair innovation award winner

- The industry's only IP68 wet-listed direct burial transformer/power supply center and winner of the 2008 Lightfair Innovation Award for excellence in product design
- Having the opportunity to directly bury your low-voltage transformer/power supply center and hide it in the dirt or even concrete, the designer has the liberty to design a landscape without constraint.
- Made to house up to two 12V/24V Q-SET magnetic or electronic power supplies with up to 900W AC or 600W DC
- Completely watertight and comes with complete installation instructions and an easy-to-use sealing kit to ensure a proper installation.
- Most reliable direct burial power supply enclosure on the market and is pool & spa rated with the Q-SET 1, 2, and 3.
- All wire entry/exits other than conduit entries MUST use Q-CLIK connectors. Failure to use them will void warranty.

1 PRODUCT	2 PLATE COVER OPTIONS	3 RING OPTIONS
Q-VAULT-5	BK	CR

Sample Part Number: **Q-VAULT-5-BK-ST**

1 PRODUCT

Q-VAULT-5

2 PLATE COVER OPTIONS

BK	Black (Standard)
SS	Stainless Steel
BZ	Bronze

3 RING OPTIONS

ST	Standard
LR	Lawn Guard Ring
CR	Concrete Pour Ring

TAMPER RESISTANT SCREWS (TORK) TO BE SUPPLIED BY QTL LIGHTING IN LIEU OF THE STANDARD HARDWARE.

PRODUCT INFORMATION

Fits	1	Up to 2
Q-SET-1		•
Q-SET-2	•	
Q-SET-3	•	
Q-SET-eLED		•
Q-SET-eLED		•

Knock Outs (in)	NPT KO's
1/2"	2
3/4"	4

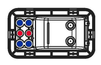

Bottom View

If any of the primary or secondary wiring is done outside of conduit, please consult factory for proper connectors and wire to maintain IP68 rating and warranty.

To maintain Class 2 wiring compliance, do not exceed 60 watts at 12VDC or 96 watts at 24VDC per fixture feed. Failure to do so will void fixture warranty and create a fire hazard.

© 2025 QTL. All rights reserved | 155 Hill St. Milford, CT 06460 | 203-357-8777 | sales@QTLlighting | QTL.lighting

Specification subject to change. Rev-07-24-25

NO.	REVISION COMMENTS	BY	REVIEW	DATE

DESIGNER | DRAWN BY | CHECKED BY

M. STEMMLER — STATE OF WASHINGTON — 92135 — REGISTERED PROFESSIONAL ENGINEER

03-06-2026

CITY OF MOUNTLAKE TERRACE
TRANSIT CONNECTION CORRIDOR
PLAZA LIGHTING DETAILS

TITLE

TENW
520 KIRKLAND WAY, SUITE 100
KIRKLAND, WA, 98033
ELYSE STEMMLER, P.E.
PRINCIPAL
ELYSE@TENW.COM
425-223-0851

TENW 2022-232
PROJECT NUMBER

IL-03
DRAWING NO.

SHEET 30 OF 31

© 2026 OTAK, INC.

CALL BEFORE YOU DIG 1-800-424-5555

PROJECT DESCRIPTION

1. Miguel Edwards – Mountlake Terrace Artwork is a freestanding exterior steel sculpture and foundation to be installed in Mountlake Terrace, WA.
2. This section is for general orientation only. The Contractor is responsible for all scope items described in the drawings and specifications as well as for all material and labor that can reasonably be inferred there from.

GENERAL APPLICATION

1. All things which, in the opinion of the Contractor, appear to be deficiencies, omissions, contradictions or ambiguities in the drawings shall be brought to the attention of the Structural Engineer. Corrections or written interpretations shall be issued before affected work may proceed.
2. The Contractor shall inform the Structural Engineer, clearly and explicitly in writing, of any deviation or substitution from requirements of the contract documents. Contractor shall not be relieved of any requirement of the contract documents by virtue of the Structural Engineer's review of shop drawings, project data, etc., unless the Contractor has clearly and explicitly informed the Structural Engineer in writing of any deviations or substitutions at time of submission.

DESIGN CRITERIA

1. Building Code: 2018 IBC, Washington State
2. Gravity Loads: Structure Self-Weight, 300# Concentrated Live Load Various Loc.
3. Snow Loads:
   - 3.1. Ground Snow Load, Pg = 25psf
4. Wind Loads:
   - 4.1. Ultimate Design Wind Speed, V = 98mph (Risk Category II)
   - 4.2. Importance Factor: 1.0
   - 4.3. Exposure Category: C
   - 4.4. Topographic Factor, Kzt = 1.0
   - 4.5. Directionality Factor, Kd = 0.85
   - 4.6. Velocity Pressure Exposure Coefficient, Kz = 0.9
   - 4.7. Gust Factor, G = 0.85
   - 4.8. Force Coefficient, Cf = 1.8
   - 4.9. Net Design Pressure (ASD), p = 19.2psf
5. Seismic Loads:
   - 5.1. Seismic Importance Factor, I = 1.0
   - 5.2. Risk Category: II
   - 5.3. Ss = 1.33g
   - 5.4. S1 = 0.46g
   - 5.5. Site Class: D
   - 5.6. Sds = 0.89g
   - 5.7. Sd1 = 0.47g
   - 5.8. Seismic Design Category: D
   - 5.9. Seismic Force Resisting System: Cant. Col. – Steel Moment Frames
   - 5.10. Seismic Response Coefficient, Cs = 0.44
   - 5.11. Response Modification Factor, R = 2.5

CODES AND STANDARDS

1. Building Code: 2018 IBC, Washington State
2. "Specification for Structural Steel Buildings" ANSI / AISC 360-05 by American Institute of Steel Construction (AISC).
3. "AISC Code of Standard Practice" by AISC.
4. "Structural Stainless Steel" by AISC
5. "Building Code Requirements for Reinforced Concrete", ACI318, by the American Concrete Institute (ACI).
6. "Manual of Standard Practice" by the Concrete Reinforcing Steel Institute (CRSI).
7. All references are latest edition unless noted otherwise.

CAST-IN-PLACE CONCRETE

1. Minimum concrete compressive strength at 28 days and unit weight:

ELEMENT	STRENGH, PSI	WEIGHT, PCF
Footings	4000	145

2. Concrete shall not be placed until reinforcing and embedded items have been inspected by the owner's independent inspection agency and/or the special investigator.
3. Reinforcing:
   - a. Bars: ASTM A615-grade 60, except grade 40 for bars noted as field bent.
   - b. Welded Wire Fabric: ASTM A185.
4. Clearance between reinforcing and concrete surfaces:
   - a. Unformed – 3"
5. Earth formed trenches may be used for footings.
6. Unless noted, provide continuous reinforcing around corners and through: construction joints, and joints between all abutting members.
7. Provide standard hooks on bars terminating at a concrete face unless noted i.e.: edges of openings, slab edges, expansion joints, ends of beams, and ends of walls, etc.
8. Splice bars with contact laps unless noted otherwise.
   - a. Use class A splices.
   - b. For lightweight concrete, multiply lengths in tables by 1.3.
   - c. For epoxy-coated reinforcement, multiply lengths in tables by 1.5.

TENSION LAP SPLICES (4000 PSI CONCRETE)

BAR SIZE	LAP CLASS	TOP BARS	OTHER BARS
#3	A	19	15
	B	24	19
#4	A	25	19
	B	32	25
#5	A	31	24
	B	40	31
#6	A	37	29
	B	48	37
#7	A	54	42
	B	70	54
#8	A	62	48
	B	80	62
#9	A	70	54
	B	91	70
#10	A	79	61
	B	102	79
#11	A	87	67
	B	113	87

15. Concrete mix designs:
   - a. Submit written reports of each proposed concrete mix not less than 15 days prior to the start of work.
   - b. Mix designs, including water cement ratios and slumps, shall be prepared in accordance with ACI 301.
   - c. Cement shall conform to ASTM C 150 Type I.
   - d. Normal weight aggregate shall conform to ASTM C33.
   - e. Light weight aggregate shall conform to ASTM C330.
   - f. No admixtures containing calcium chloride shall be permitted in any concrete.
   - g. Maximum aggregate size shall be: 1 ½" for formed elements and ¾" for slabs on grade.
   - h. Water reducing admixture shall be used in all concrete.
   - i. Air entraining admixture in accordance with ACI 301 shall be used in all concrete exposed to freezing and thawing during either construction or service conditions.
   - j. Concrete subjected to freezing/thawing shall have a maximum water/cement ratio of 0.50 and shall contain the amount of air entraining agent specified in ACI 301.
   - k. In no case shall water/cement ratio exceed the following:
     f'c=4000 psi 0.50 max. w/c ratio
16. Curing:
   - a. Liquid type, membrane forming curing compound, conforming to ASTM C309. use Type I, Class A compounds.
   - b. Curing compounds should not be used on surfaces that are to receive additional concrete, paint, tile or other material requiring a positive bond unless the contractor has demonstrated that the membrane can be satisfactorily removed before subsequent application is made, or the membrane dissipates or can serve satisfactorily as the base for the later application.
   - c. Curing shall be maintained for a period of 7 days in which the mean ambient temperature is above 40 degrees Fahrenheit or until the concrete has attained 70% of the specified compressive strength.
17. Hot Weather Placement: When depositing concrete in hot weather, follow recommendations of ACI 305. The temperature of concrete at time of placement shall not exceed 90 degrees Fahrenheit. Protect to prevent rapid drying. Start finishing and curing as soon as possible.
18. Cold Weather Placement: When temperatures drop below 40 degrees at any time during concrete placing and curing, the provisions of ACI 306 R-2, which addresses the protection of concrete from freezing shall be followed. The following provisions are a guideline for cold-weather concreting procedures, however, they DO NOT replace nor supercede ACI-306.
19. Concrete mix and mixing procedures:
   - a. Where use is desired, a non-corrosive, non-chloride accelerating admixture may be used in accordance with manufacturers printed instructions. Admixtures containing calcium chloride SHALL NOT BE USED UNDER ANY CIRCUMSTANCES.
   - b. Air entraining admixture in accordance with ACI-301 shall be included in any concrete subject to freezing and thawing during either construction or service conditions.
   - c. Water and aggregate shall be uniformly heated to achieve the following temperatures during mixing (Refer to ACI-306, Table 3.1). If air temperature is ..., then concrete temperature as mixed is...
     Greater than 30° F; 60° F
     Between 0° and 30° F; 65° F
     Less than 0° F; 70° F
   - d. Concrete slump shall be maintained at 4 inches or less. (Ref. ACI-306)
20. Concrete Placing: (Ref. ACI-306)
   - a. All snow, ice, and frost shall be removed so that it does not occupy space intended to be filled with concrete.
   - b. Concrete shall not be placed on frozen subgrade.
   - c. Concrete shall be placed at a temperature not less than 55° F.
21. Protection of concrete during curing: (Ref. ACI-306)
   - a. Concrete shall be maintained at a temperature not less than 55° F during curing for the time duration specified below.
   - b. Concrete that will be exposed to little or no freezing and thawing in service or during construction, such as in foundations and substructures, shall be maintained at the curing temperature for:
     i. Two days if made with Type I or II Cement.
     ii. One day if made with Type III cement, or accelerating admixture, or 100 lbs/yd of additional cement.
   - c. Concrete that will be exposed to weather in service or during construction:
     i. Three days if made with Type I or II cement.
     ii. Two days if made with Type III cement, or accelerating admixture, or 100 lbs/yd of additional cement.
22. Insulating materials for concrete protection are outlined in ACI-306.
23. Welding of reinforcing is prohibited.

MISCELLANEOUS NOTES

1. The Contractor is solely responsible for all safety regulations, programs and precautions related to all work on this project.
2. The Contractor is solely responsible for the protection of persons and property either on or adjacent to the project and shall protect it against injury, damage, or loss.
3. Means and methods of construction and erection of structural materials are solely the Contractor's responsibility.
4. The structure is designed to function as a unit upon completion of construction of the project and then, only to support the design loads indicated. The contractor is responsible for means, methods and sequence of construction and the adequacy of the structure to support loads occurring during construction of the project. Furnish all temporary bracing, shoring, and/or support as may be required.
5. No structural modifications, alterations, or repairs shall be made without prior review by Structural Engineer.

QUALITY CONTROL

1. The Contractor is responsible for quality control, including workmanship and materials furnished by his subcontractors and suppliers.
2. Inspection or testing by the Owner does not relieve the Contractor of his responsibility to perform the Work in accordance with the Contract Documents.
3. Workmanship: The Contractor is responsible and shall bear the cost of correcting work which does not conform to the specified requirements.
4. Correct deficient work by means acceptable to the Engineer. The cost of extra work incurred by the Engineer to approve corrective work shall be borne by the Contractor.

STRUCTURAL ABBREVIATIONS

ABBREV.	DEFINITION	ABBREV.	DEFINITION
A.B.	anchor bolts	HORIZ	horizontal
ADDN'L	additional	I.F.	inside face
A.F.F.	above finished floor	INT	interior
ALT	alternate	JT	joint
ARCH	architectural	L, LEN	length
B, BOT	bottom	LAT	lateral
B.B.	bond beam	LLH	long leg horizontal
B.L.	brick ledge	LLV	long leg vertical
BLDG	building	LONG	longitudinal
BM	beam	LVL	laminated veneer lumber
BRG	bearing	MAS	masonry
BTWN	between	MAX	maximum
CJ	const./control joint	MECH	mechanical
CL,CLR	clear	MLAM	microlam
CMU	conc. masonry unit	MFR	manufacturer
COL	column	MIN	minimum
CONC	concrete	MTL	metal
CONN	connection	N.I.C.	not in contract
CONST	construction	NMWT	normal weight
CONT	continuous	NOM	nominal
CTRL	control	NS	near side
DET,DTL	detail	O.F.	outside face
DB	deck bearing	O.H.	opposite hand
DIM	dimension	OPNG	opening
DK	deck	PC	precast
DS	diagonal sheathing	PL	plate
DWGS	drawings	REINF	reinforcement
DWL	dowel	REQ'D	required
EA	each	RET	retaining
EE	extended end	RWR	rake wall rafter
EF	each face	S.A.D.	see arch. drawings
EFF	effective	S.O.G.	slab on grade
EJ	expansion joint	SC	slip critical
EL,ELEV	elevation	SCHED	schedule
EOC	edge of concrete	SECT	section
EOD	edge of deck	SIP	structural insulating panel
EOM	edge of masonry	SL	slab
EOS	edge of slab	SPA	spacing
EW	each way	SST	Simpson Strong Tie
EXIST	existing	STFNR	stiffener
EXP	expansion	STL	steel
EXT	exterior, extension	SUPPL	supplier
FDTN	foundation	SUPT	support
FF	finish floor	T	top
FL	floor	T/xx	top of xxx
FOS	face of stud	THK	thick, thickness
FP	full penetration	TJI	Wood I beam (see notes)
FS	far side	TRAN	transverse
FTG	footing	TYP	typical
GA	gauge	UNO	unless noted otherwise
GB	grade beam	U.S.C.	under seperate contract
GEN	general	VERT	vertical
GLB	glu-lam beam	V.I.F.	verify in field
HAS	headed anchor stud	W	wide, width
HK	hook	WWF	welded wire fabric

GENERAL LEGEND

GENERAL NOTATIONS

- XX / YY — ELEVATION OR BUILDING SECTION; XX = DRAWING NUMBER; YY = SHEET NUMBER
- XX / YY — SECTION CUT; XX = DRAWING NUMBER; YY = SHEET NUMBER
- XX / YY — DETAIL CALL OUT; XX = DRAWING NUMBER; YY = SHEET NUMBER
- B — DETAIL SECTION CUT B
- INDICATES STEPS AND SLOPES IN DECKS, ROOFS, & SLABS
- XXX'-YY" / T.O. SLAB — ELEVATION CALLOUT XXX'-YY" = OBJECT ELEVATION T.O. SLAB = T.O. (OR B.O.) OBJECT
- X — INDICATES ADDENDUM NUMBER
- INDICATES CHANGE FROM LAST ISSUE
- XX — KEYED NOTE – SEE KEYED NOTES
- INDICATES EXTENTS

SITE PLACEMENT NOTES:
1) CENTER FOUNDATION BETWEEN SEATING ELEMENTS W/ 2'-0" CLEARANCE AS SHOWN. PROJECT CIVIL ENGINEER OR LANDSCAPE ARCHITECT TO PROVIDE SURVEY DATA FOR SITE LAYOUT
2) SET T.O. FOUNDATION 5" BELOW TOP OF SEAT ELEVATION AND LEVEL WITH TOP OF ADJACENT PAVEMENT.
3) 12" IS MINIMUM FOUNDATION THICKNESS, INCREASE AS NEEDED TO ACHIEVE ELEVATION CRITERIA ABOVE

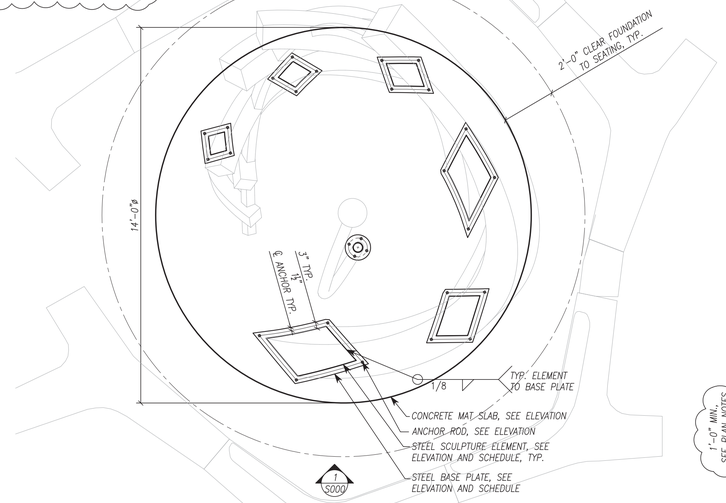

2 SCULPTURE PLAN
SCALE : 3/8"=1'-0" 20500T001

ELEMENT SIZING SCHEDULE

ELEMENT	SIZE	BASE PLATE THICKNESS AND MINIMUM DIMENSIONS
1	4" SCHEDULE 40 PIPE	PL1"X10"ø
2	4"X4"X1/8"	PL1/2"X10"X10"
3	6"X6"X1/8"	PL3/4"X12"X12"
4	8"X8"X1/8"	PL3/4"X14"X14"
5	10"X10"X1/8"	PL1"X16"X16"
6	12"X12"X1/8"	PL1"X18"X18"
7	14"X14"X1/8"	PL1"X20"X20"
8	3"X3"X1/8"	N/A

NOTES:
1) SCULPTURE SIZING OPTIONS SHOWN ARE THE MINIMUM DIMENSIONS REQUIRED TO MEET STRUCTURAL CODE AND CRITERIA. ARTIST MAY INCREASE SIZING IF DESIRED.
2) ALL ELEMENTS MAY BE SQUARE TUBE OR A BUILT-UP SQUARE SECTION USING PLATE OF THICKNESS SPECIFIED
3) FOR BUILT-UP SECTION, WELD ALL EDGES W/ 1/8" FILLET WELD IN 2-12 STITCH WELD. 4) ARTIST MAY MAKE SMALL ADJUSTMENTS TO GEOMETRY, AND WILL SEND PHOTOS OF FINAL FABRICATED SHAPE TO ENGINEER FOR CONFIRMATION.

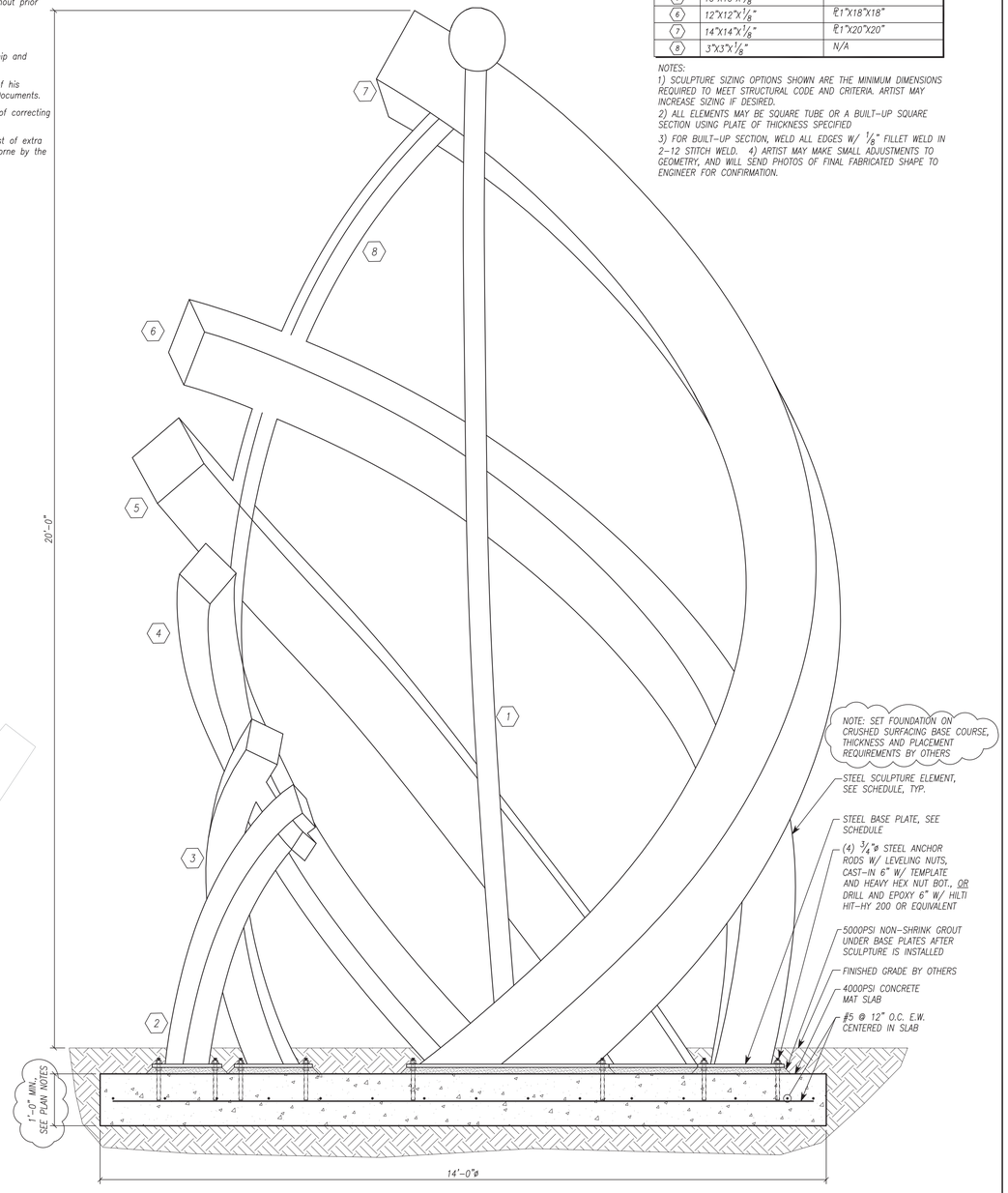

1 SCULPTURE ELEVATION
SCALE : 3/4"=1'-0" 20500T001

THESE DRAWINGS ARE TO BE USED IN CONJUNCTION WITH THE ARCHITECTURAL DRAWINGS ON THE PROJECT TO CLEARLY DEFINE ALL OF THE REQUIREMENTS FOR CONSTRUCTION. WHERE CONFLICTS OCCUR, CONTACT THE ARCHITECT FOR CLARIFICATION.

DISCLAIMER
THE STRUCTURAL ENGINEERS SEAL ON THIS DRAWING INDICATES THAT THE INFORMATION SHOWN AND THE CALCULATIONS PERTAINING TO THAT INFORMATION HAVE BEEN PREPARED BY QUALIFIED PEOPLE UNDER THE DIRECTION OF THE ENGINEER-OF-RECORD. THE SEAL DOES NOT IMPLY RESPONSIBILITY FOR INFORMATION PREPARED BY OTHERS NOR FOR ANY INFORMATION NOT SHOWN ON THIS DRAWING AND SUCH RESPONSIBILITY IS SPECIFICALLY DISCLAIMED. ON PHASED PROJECTS, DRAWINGS THAT ARE ISSUED BUT NOT SEALED SHALL BE CONSIDERED TO BE PRELIMINARY IN NATURE AND ARE ISSUED FOR INFORMATION ONLY.

NICHOLAS GEURES — STATE OF WASHINGTON — 20123414 — REGISTERED PROFESSIONAL ENGINEER

Yetiweurks
ART + ENGINEERING
303.646.7553 | yetiroot@gmail.com
www.yetiweurks.com

TITLE:	GENERAL NOTES, ABBREVIATIONS, LEGEND, SCULPTURE ELEVATION AND DETAILS
PROJECT NAME:	Miguel Edwards – Mountlake Terrace
DRAWN BY:	NAG
SCALE:	AS NOTED

S000

PLOT DATE: 10/07/2025
DRAWING FILE NAME: 2000

Copyright © 2025 yetiweurks ltd.

APPENDIX D – FSBE Goals

Washington State Department of Transportation

Transportation Building
310 Maple Park Avenue S.E.
P.O. Box 47300
Olympia, WA 98504-7300
360-705-7000
TTY: 1-800-833-6388
www.wsdot.wa.gov

December 2, 2025

Mr. Gary Schimek, PE
Public Works Director
City of Mountlake Terrace
6100 219th Street SW, Suite 200
Mountlake Terrace, Washington 98043-4697

City of Mountlake Terrace
Transit Connection Corridor
CDS-0815(007)
FSBE Goal & Training Hours

Dear Mr. Schimek:

Under the directions of WSDOT Office of Equity and Civil Rights, this project was evaluated for an FSBE goal under their established procedures and criteria. The results were that this project can support a set aside amount of **Thirteen percent** as an FSBE goal for this project. This evaluation of the FSBE is not a Condition of Award (COA) and cannot be utilized as a consideration in the award of this project.

The Local Agency should monitor the prime contractor's progress towards meeting the assigned FSBE goal and perform an on-site commercial useful function review of all identified FSBE subcontractors. It is required that the prime contractor submits GFE documentation at physical completion if the project's assigned FSBE goal is not met. The agency must include the following special provision in the contract.

APWA GSP 1-07.11 Option D

In addition, a federal training goal of **Zero hours** were established for this project.

If you have any questions, please contact Earl Key at 360.705.7095, or by email at earl.key@wsdot.wa.gov.

Sincerely,

Michele L. Britton, PE
Asst. State Local Programs Engineer
Local Programs

MLB:ww:ml
cc: Mehrdad Moini, PE, Northwest Region Local Programs Engineer

APPENDIX E – Unanticipated Discovery Plan

APPENDIX E
Inadvertent Discovery Language

If ground disturbing activities encounter human skeletal remains during the course of construction, then all activity will cease that may cause further disturbance to those remains. **The area of the find will be secured and protected from further disturbance.**

The finding of human skeletal remains will be reported to the **county medical examiner/coroner** and local law enforcement in the most expeditious manner possible. The remains will not be touched, moved, or further disturbed.

The county medical examiner/coroner will assume jurisdiction over the human skeletal remains and make a determination of whether those remains are forensic or non-forensic.

If the county medical examiner/coroner determines the remains are non-forensic, then they will report that finding to the **Department of Archaeology and Historic Preservation (DAHP)** who will then take jurisdiction over the remains.

The DAHP will notify any appropriate cemeteries and all affected tribes of the find. The State Physical Anthropologist will make a determination of whether the remains are Indian or Non-Indian and report that finding to any appropriate cemeteries and the affected tribes. The DAHP will then handle all consultation with the affected parties as to the future preservation, excavation, and disposition of the remains.

In the event any archaeological or historic materials are encountered during project activity, work in the immediate are (initially allowing for 10' buffer, this number may vary by circumstances) must stop and the following actions taken:

1. Implement reasonable measures to protect the discovery site, including and appropriate stabilization of covering.
2. Take reasonable steps to ensure the confidentiality of the discovery site.
3. Take reasonable steps to restrict access to the site of the discovery.

The project proponent will notify the concerned Tribes and all appropriate county, state, and federal agencies, including the Department of Archeology and Historic Preservation (SHPO for Washington). The agencies and the Tribe(s) will discuss possible measures to remove or avoid cultural material, and will reach an agreement with the project proponent regarding actions to be taken and disposition of the material.

See Revised Code of Washington, Chapter 27.53 "Archaeological Sites and Resources," for applicable state laws and statutes. See Washington Executive Order 05-05, "Archaeological and Cultural Resources." Additional state and federal law(s) may also apply.

When to stop work:

Construction work may uncover previously unidentified Native American or Euro-American artifacts. This may occur for a variety of reasons, but may be associated with access restrictions during project

development, or if the area contains impervious surfaces throughout most of the project area which would have prevented standard archaeological site discovery methods.

Work must stop when the following types of artifacts and/or features are encountered:

Native American artifacts may include (but are not limited to):

- Flaked stone tools (arrowheads, knives scrapers etc.)
- Waste flakes that resulted from the construction of flaked stone tools.
- Ground stone tools like mortars and pestles.
- Layers (strata) of discolored earth resulting from fire hearths. May be black, red or mottled brown and often contain discolored cracked rocks or dark soil with broken shell
- Human remains
- Structural remains- wooden beams, post holes, fish weirs

Euro-American artifacts may include (but are not limited to):

- Glass (from bottles, vessels, windows etc.)
- Ceramic (from dinnerware, vessels etc.)
- Metal (nails, drink/food cans, tobacco tins, industrial parts etc.)
- Building materials (bricks, shingles etc.)
- Building remains (foundations, architectural components etc.)
- Old Wooden Posts, pilings, or planks (these may be encountered above or below water)
- Even what looks to be old garbage could very well be an important archaeological resource
- Remains of ships or sea-going vessels, marine hardware etc.
- Old farm equipment may indicate historic resources in the area

When in doubt, call it in!

CONTACTS:

Project Proponent:
Jurisdiction: City of Mountlake Terrace
Contact Name: Donnelle Dayao, Parks Project Manager
Phone/Email: 425-744-6286/ddayao@mltwa.gov
Alternate Contact Name: Jeff Betz, Recreation and Parks Director
Phone/Email; 425-640-3101/jbetz@mltwa.gov

Public Works Board (PWB)
Izabela Kocan, Board Liason
564-669-1788 or Izabela.Kocan@Commerce.wa.gov

Department of Archeology and Historic Preservation (DAHP)
Allyson Brooks, Ph.D., State Historic Preservation Officer/
Director 360.480-6922 or Allyson.brooks@dahp.wa.gov

Snohomish County Medical Examiner
24 Hour Investigator Phone: 425-438-6200
9509 29th Ave West
Everett, WA 98204

APPENDIX F – Geotechnical Information

GEOTECHNICAL REPORT
Transit Connection Corridor Project – Gateway Plaza
Mountlake Terrace, Washington

HWA Project No. 2022-110-21

Prepared for
Otak

November 17, 2025

HWA GeoSciences Inc.
DBE/MWBE

Geotechnical Engineering
Pavement Engineering
Geoenvironmental
Hydrogeology
Inspection & Testing

HWA GeoSciences Inc.
DBE/MWBE

November 17, 2025
HWA Project No. 2022-044-21

Otak
11241 Willows Road NE, Suite 200
Redmond, WA 98052

Attention: Tim Hedges, P.E.

Subject: **GEOTECHNICAL REPORT**
Transit Connection Corridor Project – Gateway Plaza
Mountlake Terrace, Washington

Mr. Hedges,

As requested, HWA GeoSciences Inc. (HWA) has completed a geotechnical investigation to support the Gateway Plaza portion of the proposed Transit Connection Corridor Project in Mountlake Terrace, Washington. This report presents the results of our field explorations and laboratory testing along with our geotechnical recommendations pertaining to retaining walls, luminaire foundations, hardscape subgrade preparation, and earthwork. The attached final report summarizes the results of our study and presents our conclusions and recommendations.

We appreciate the opportunity to provide geotechnical engineering services on this project. If you have any questions regarding this report or require additional information or services, please contact the undersigned at your convenience.

Sincerely,

HWA GEOSCIENCES INC.

Joe Westergreen, P.E.
Geotechnical Engineer

Bryan Hawkins, P.E.
Senior Geotechnical Engineer

TABLE OF CONTENTS

Page

1. INTRODUCTION 1
    1.1 GENERAL 1
    1.2 PROJECT UNDERSTANDING 1
2. FIELD INVESTIGATION AND LABORATORY TESTING 2
    2.1. GEOTECHNICAL BORINGS 2
    2.2 LABORATORY TESTING 3
3. SITE CONDITIONS 3
    3.1 SURFACE CONDITIONS 3
    3.2 GENERAL GEOLOGIC CONDITIONS 3
    3.3 SUBSURFACE CONDITIONS 4
    3.4 GROUNDWATER 4
4. CONCLUSIONS AND RECOMMENDATIONS 5
    4.1 GENERAL 5
    4.2 SEISMIC CONSIDERATIONS 5
        4.2.1 Liquefaction 6
    4.3 RETAINING WALLS 6
        4.3.1 Wall Design Parameters 7
        4.4.3 Wall Settlement 8
        4.4.4 Subgrade Preparation 8
        4.4.5 Wall Backfill 8
        4.4.6 Wall Drainage Considerations 9
    4.5 LUMINAIRE FOUNDATIONS 9
        4.5.1 Luminaire Construction Considerations 9
    4.6 GENERAL EARTHWORK RECOMMENDATIONS 10
        4.6.1 Subgrade Preparation 10
        4.6.2 Structural Fill Materials and Compaction 10
        4.6.3 Temporary Excavations 11
        4.6.4 Permanent Slopes 12
        4.6.5 Temporary Erosion Control 12
        4.6.6 Wet Weather Earthwork 12
5. CONDITIONS AND LIMITATIONS 13
REFERENCES 15

LIST OF FIGURES (FOLLOWING TEXT)

Figure 1 Site and Vicinity Map
Figure 2 Site & Exploration Plan

APPENDICES

Appendix A: Field Exploration

Figure A-1	Legend of Terms and Symbols Used on Exploration Logs
Figures A-2 – A5	Logs of Boreholes BH-10 through BH-13

Appendix B: Laboratory Testing

Figures B-1 & B-2	Summary of Material Properties
Figures B-3 & B-4	Particle-Size Analyses of Soils
Figure B-5	Liquid Limit, Plastic Limit and Plasticity Index of Soils

GEOTECHNICAL REPORT
TRANSIT CONNECTION CORRIDOR PROJECT – GATEWAY PLAZA
MOUNTLAKE TERRACE, WASHINGTON

1. INTRODUCTION

1.1 GENERAL

This report summarizes the results of a geotechnical engineering investigation performed by HWA GeoSciences Inc. (HWA) for the Gateway Plaza portion of the Transit Connection Corridor Project in Mountlake Terrace, Washington. The approximate location of the Gateway Plaza project site is shown on the Site and Vicinity Map, Figure 1, and on the Site and Exploration Plan, Figure 2. Our field work included logging the drilling of four boreholes to evaluate subsurface soil and groundwater conditions. Laboratory tests were conducted on select soil samples to determine relevant engineering properties of the subsurface soils. Engineering analyses were performed to develop the recommendations presented in this report.

1.2 PROJECT UNDERSTANDING

As part of the Transit Connection Corridor Project, we understand that the city would like to create a plaza area on the southwestern corner of 236th Street SW and Van Ry Boulevard. Based on the existing site topography, we understand that development of the plaza will require a retaining wall with exposed heights of up to 20 feet to create a relatively level area for the proposed improvements. This will require crossing and filling over an existing Structural Earth Wall (SEW) that runs parallel to Van Ry Boulevard through the project area.

We reviewed plans provided by the City of Mountlake Terrace related to previous development work in this proposed plaza area. This included the extension of Van Ry Boulevard to the north to connect to 236th Street SW. Based on the provided Mountlake Terrace Gateway Record Drawings, the existing SEW was constructed on the west side of Van Ry Boulevard to support construction of the roadway extension. The record drawings indicate wall heights of between about 5 to 30 feet within the proposed plaza area following wall construction. Based on a review of historical aerial images, it appears construction of Van Ry Boulevard adjacent to the plaza site was completed in 2019. Since the construction of Van Ry Boulevard, we understand that additional fill has been placed in the proposed plaza area including next to the existing SEW as part of the Sound Transit Light Rail project.

2. FIELD INVESTIGATION AND LABORATORY TESTING

2.1. GEOTECHNICAL BORINGS

HWA logged the drilling of four machine-drilled geotechnical borings, designated BH-10 through BH-13, in support of design of the project. The locations of the explorations are shown on the Site and Exploration Plan, Figure 2. The borings were drilled by BoreTec Inc., of Bellevue, Washington, on November 9, 2023, under subcontract with HWA, using an excavator mounted drill rig. The drill rig utilized hollow-stem auger drilling techniques, and the boring depths varied from approximately 31.5 to 46.5 feet below ground surface.

In each boring, Standard Penetration Test (SPT) sampling was performed using a 2-inch outside diameter split-spoon sampler driven by a 140-pound hammer raised using a rope and cathead system. During the SPT, samples were obtained by driving the sampler 18 inches into the soil with the hammer free-falling 30 inches. The numbers of blows required for each 6 inches of penetration were recorded. The Standard Penetration Resistance ("N-value") of the soil is calculated as the number of blows required for the final 12 inches of penetration. This resistance, or N-value, provides an indication of relative density of granular soils and the relative consistency of cohesive soils; both indicators of soil strength.

A geotechnical engineer from HWA logged the explorations and recorded all pertinent information. Soil samples obtained from the boreholes were classified in the field and representative portions were sealed in plastic bags. Pertinent information including soil sample depths, stratigraphy, soil engineering characteristics, and groundwater occurrence were recorded. These soil samples were taken to our Bothell, Washington, laboratory for further examination and testing.

Our scoped investigation for this task included logging the drilling of three borings to depths of about 35 feet. Due to the deep fill deposits encountered in BH-10 through BH-12, we drilled a fourth boring (BH-13) away from the existing deep buried sewer lines to reach the native soils below the fill. In boring BH-13, we began sampling at a depth of 25 feet due to time constraints.

The stratigraphic contacts shown on the individual exploration logs represent the approximate boundaries between soil types; actual transitions may be more gradual. The soil and groundwater conditions depicted are only for the specific date and location reported and, therefore, are not necessarily representative of other locations and times. A legend of the terms and symbols used on the exploration logs is presented in Appendix A, Figure A-1. Summary logs of the borehole explorations are presented in Figures A-2 through A-5.

2.2 LABORATORY TESTING

Laboratory tests were conducted on selected samples retrieved from the explorations to characterize relevant engineering properties and index parameters of the soils encountered in the explorations. The tests included visual classification, natural moisture content determination, grain size distribution analysis, Atterberg Limits, and organic content. The tests were conducted in the HWA laboratory in general accordance with appropriate American Society of Testing and Materials (ASTM) standards and are discussed in further detail in Appendix B. The test results are also presented in Appendix B, and/or displayed on the exploration logs in Appendix A, as appropriate.

3. SITE CONDITIONS

3.1 SURFACE CONDITIONS

The proposed plaza area is located on the southwestern corner of Van Ry Boulevard and 236th Street SW. Within the project limits there is an existing Structural Earth Wall (SEW) located west of Van Ry Boulevard that extends parallel to Van Ry Boulevard. The wall appears to have been constructed in 2019 to connect Van Ry Boulevard to 236th Street SW. Between the existing SEW and Van Ry Boulevard the ground slopes down to the west from the roadway at an inclination of about to 2H:1V (Horizontal:Vertical), and the slope is covered with bark and established landscaping.

To the west of the existing SEW, the existing ground surface within the proposed plaza area generally slopes down to the south away from 236th Street SW at inclinations between about 5H:1V to 3H:1V, and the ground surface is covered with bark. As part of the construction of the Light Rail terminal, a 16-inch-wide concrete retaining wall was constructed to the southwest and down slope of the proposed plaza area.

3.2 GENERAL GEOLOGIC CONDITIONS

The project area is located within the Puget Lowland. The Puget Lowland has repeatedly been occupied by a portion of the continental glaciers that developed during the ice ages of the Quaternary period. During at least four periods, portions of the ice sheet advanced south from British Columbia into the lowlands of Western Washington. The southern extent of these glacial advances was near Olympia, Washington. Each major advance included numerous local advances and retreats, and each advance and retreat resulted in its own sequence of erosion and deposition of glacial lacustrine, outwash, till, and drift deposits. Between and following these glacial advances, sediments from the Olympic and Cascade Mountains accumulated in the Puget Lowland. As the most recent glacier retreated, it uncovered a sculpted landscape of elongated, north-south trending hills and valleys between the Cascade and Olympic Mountain ranges, composed of a complex sequence of glacial and interglacial deposits.

Specific geologic information for the project area was obtained from the *Geologic Map of the Edmonds East and Part of the Edmonds West Quadrangles, Washington* (Minard, 1983). The geologic map indicates that the project area is generally mapped as advance outwash, described as a thick section of mostly clean, gray, pebbly sand with increasing amounts of gravel higher in the section. The advance outwash was deposited by meltwater flowing from the advancing front of the glacier and was glacially overridden resulting in dense to very dense conditions.

3.3 SUBSURFACE CONDITIONS

The results of our subsurface explorations indicate that the proposed plaza site is underlain by thick deposits of fill over advance outwash. A thin layer of organic material was encountered between the existing fill and advance outwash in boring BH-13, which may represent the original ground surface (buried topsoil) prior to fill placement and development of this area. The soil units encountered are described in more detail below:

- **Fill:** Fill was encountered in all four borings completed in the proposed plaza area. The fill generally consisted of loose to medium dense, silty sand with gravel; medium stiff to very stiff, sandy silt; medium stiff to very stiff, sandy clay; or medium dense, clayey sand with variable amounts of gravel. A minor amount of organics and decomposing wood chips were observed within the fill in BH-10 at a depth of about 25 feet. Borings BH-10 through BH-12 were terminated in the fill at a depth of about 31.5 feet. The fill extended to a depth of about 36 feet in boring BH-13. Native deposits were encountered below the fill in BH-13 as described below.

- **Buried Topsoil:** An approximately 1-foot-thick layer of highly organic material was encountered in boring BH-13 below the fill, at a depth of about 35 feet. The organic layer appears to be an old topsoil layer that was buried by fill placement.

- **Advance Outwash:** Advance outwash was encountered underlying the fill and buried topsoil in boring BH-13 and extended to the maximum depth explored of about 46.5 feet. The advance outwash typically consisted of silty sand to sand with silt with variable amounts of gravel. Based on SPT blow counts, the material is generally medium dense to very dense.

3.4 GROUNDWATER

Groundwater was encountered during drilling in boring BH-13 at a depth of about 40 feet, within the advance outwash soils. Groundwater was not encountered in the other three borings during drilling. We expect that groundwater levels will vary seasonally with the highest levels in the wet winter months and lowest in the dry summer months.

4. CONCLUSIONS AND RECOMMENDATIONS

4.1 GENERAL

The Gateway Plaza project area is underlain by thick deposits of existing fill. Based on the results of our subsurface explorations, the existing fill soils are generally well-compacted based on the SPT blow counts. However, we did observe some isolated areas of loose soil within the thick fill deposits. We understand that a SEW with exposed heights of up to 20 feet will be required to construct a relatively level area for the proposed plaza. The SEW subgrade should be evaluated by the geotechnical engineer or their representative during construction. Demolition of the upper portions of the existing SEW will be required within areas of the proposed SEW.

Given the relatively high fines content of the fill soils encountered, we recommend that earthwork activities be completed during the dry summer months, when feasible. In periods of wet weather, the existing fill soils will deteriorate quickly when exposed to water and will likely become unworkable. Specific recommendations related to seismic considerations, retaining wall design, luminaire foundations, and earthwork are provided below.

4.2 SEISMIC CONSIDERATIONS

Earthquake loading for the project was developed in accordance with the General Procedure provided in Section 3.4 of the AASHTO Guide Specifications for LRFD Seismic Bridge Design, 2nd Edition, 2011, and the Washington State Department of Transportation (WSDOT) amendments to the AASHTO Guide Specifications provided in the Bridge Design Manual (LRFD) (BDM) (WSDOT, 2022). For seismic analysis, the Site Class is required to be established and is determined based on the average soil properties in the upper 100 feet below the ground surface. Based on our subsurface explorations and understanding of site geology, it is our opinion that the site is underlain by soils that are consistent with Site Class D.

The design parameters for the design level seismic event, which has a probability of exceedance of 7 percent in 75 years (equal to a return period of 1,033 years), were obtained from the USGS Uniform Hazard Tool website using the USGS Uniform Hazard Tool website using the U.S. 2014 Dynamic Conterminous edition (v4.2.0), which provides the probabilistic seismic hazard parameters from the *2014 Updates to the National Hazard Maps* (Peterson, et al., 2014). Site coefficients were developed following the WSDOT *Bridge Design Manual* that adopts the site coefficients provided in ASCE 7-16. Table 1 presents the design coefficients to use assuming Site Class D for the site.

Table 1.
Seismic Coefficients Using AASHTO Guide Specifications
Calculated by USGS Seismic Uniform Hazard Tool
Location: Lat. 47.784692; Long. -122.314251

Site Class	Peak Horizontal Bedrock Acceleration PBA, (g)	Spectral Bedrock Acceleration at 0.2 sec S_S, (g)	Spectral Bedrock Acceleration at 1.0 sec S_1, (g)	Site Coefficients			Peak Horizontal Acceleration PGA (A_S), (g)
				F_{pga}	F_a	F_v	
D	0.416	0.961	0.258	1.184	1.116	2.084	0.493

The spectral acceleration coefficient at 1-second period (S_{D1}), which is equal to F_v multiplied by S_1, is greater than 0.5; therefore, the Seismic Design Category D should be used.

4.2.1 Liquefaction

Liquefaction is a temporary loss of soil shear strength due to earthquake shaking. Loose, saturated cohesionless soils are highly susceptible to earthquake-induced liquefaction; however, recent experience and research has shown that certain silts and low-plasticity clays are also susceptible. Primary factors controlling the development of liquefaction include the intensity and duration of strong ground motions, the characteristics of subsurface soils, in-situ stress conditions and the depth to groundwater.

Groundwater seepage was only observed in boring BH-13 at about 40 feet within the dense advance outwash. Based on mapped geology and the results of our subsurface explorations, soil liquefaction is not anticipated during a seismic event and is not considered a design consideration.

4.3 RETAINING WALLS

We understand that a SEW is planned around the perimeter of the proposed plaza to create a relatively level area, and the base of the proposed wall will generally be about 2 feet below existing grades. Based on the results of our borings, we anticipate that the wall subgrade will consist of existing fill generally composed of medium dense, silty sand with variable amounts of gravel. Following thorough compaction, the existing fill is anticipated to provide adequate support for the proposed SEW.

We understand the height of the proposed SEW will increase from each end of the plaza area to a maximum exposed wall height of about 20 feet. The maximum proposed wall height will be at the crossing of the existing SEW. Removal of a portion of the existing SEW will be required to

install the new SEW. This will likely require some demolition of the existing SEW to the south of the proposed wall. This portion of this the existing wall can be re-constructed, or the ground surface could be sloped.

4.3.1 Wall Design Parameters

We assume that the SEW will consist of a proprietary wall system that the wall supplier will design for internal stability. The wall should be designed in accordance with the most current version of the AASHTO *LRFD Bridge Design Manual* and Section 6.13 of the WSDOT *Standard Specifications* (WSDOT, 2025). We recommend that the wall be designed using the parameters presented in Table 2. We understand that the design for this wall will be performed using LRFD. Appropriate AASHTO resistance factors should be used for design of the retaining wall.

For the Extreme Event I Limit State, the wall shall be designed for a horizontal seismic acceleration coefficient K_h of one-half the peak ground acceleration, or 0.247g, and a vertical seismic coefficient Kv of 0.0g (assuming the wall is free to move during a seismic event). Extreme Event I Limit State is defined in the AASHTO Standard Specifications as a safety check involving an extreme load resulting from an earthquake in combination with the dead load and a fraction of the live loads.

Table 2. Recommended Design Parameters for Walls

Soil Properties	Reinforced soil	Retained Soil	Foundation Soil
Unit Weight (pcf)	135	130	130
Friction Angle (deg)	36	33	33
Cohesion (psf)	0	0	0
		Strength Limit State (EP+LL)	**Extreme Limit State (EP+EQ)**
Ultimate Bearing Resistance (ksf)		4.5	4.5
Horizontal Seismic Acceleration Coefficient (k_h) (g)		N/A	0.247

To satisfy global wall stability requirements we recommend that the wall be embedded at least 2 feet below existing grades.

It is important that the wall be designed per specific toe- and back-slope geometry. Additionally, vertical, and lateral dead loads such as pavement, guard rails, and chain-link fences, and live loads such as vehicular, pedestrian, construction equipment loading should be considered in

design of the retaining wall. An unfactored coefficient of friction of 0.5 times the effective stress at the base of the wall can be used for sliding resistance.

4.4.3 Wall Settlement

The onsite fill soils are variable, but generally appear to have been well compacted during placement. We anticipate that the SEW may experience some settlement due to the variability of the existing fill and changes in wall height. We anticipate total wall settlement could range from 1 to 3 inches. For the Service Limit State, the wall should be designed to accommodate a differential settlement of up to 2 inches per 100 feet of wall length. Most of the wall settlement is expected to occur during construction, as the loads are applied. Wall subgrade should be prepared as discussed below.

4.4.4 Subgrade Preparation

Subgrade preparation is important to limit differential settlement of walls and maintain stability. All organic material should be removed from beneath the entire footprint of the wall. Based on our subsurface explorations, medium dense silty sand with gravel is anticipated at wall subgrade elevations. However, due to the variability in the fill, isolated areas of soft or loose material could be encountered. The exposed subgrade should be inspected by the geotechnical engineer, or their representative. The exposed subgrade should be thoroughly compacted to a dense condition. If the material cannot be adequately compacted it should be over-excavated and replaced with structural fill as directed by the geotechnical engineer.

Once the subgrade has been approved, the walls should be founded on a leveling pad consisting of compacted Crushed Surfacing Base Course (CSBC) or Crushed Surfacing Top Course (CSTC), as described in Section 9-03.9(3) of the WSDOT *Standard Specifications* (WSDOT, 2025), compacted to at least 95% of the laboratory maximum dry density as determined by ASTM D 1557 (modified Proctor). Leveling pads should be graded to establish proper wall batter. We recommend that the leveling pads for the walls be a minimum of 6 inches thick.

4.4.5 Wall Backfill

Wall backfill materials should consist of Gravel Backfill for Walls, as described in Section 9-03.12(2) of the WSDOT *Standard Specifications* (WSDOT, 2025) and should be compacted to at least 95% of the maximum dry density as determined by ASTM D 1557 (modified Proctor). The wall backfill should be placed and compacted in layers as each row of blocks is placed.

The Contractor should consider the weight of construction equipment operating within the fill zone behind the wall. For compaction, materials within about 3 feet of the wall face should be compacted with lighter equipment to limit the loading on the back of the wall.

4.4.6 Wall Drainage Considerations

The material property recommendations provided do not account for lateral earth pressures due to the development of groundwater within the wall backfill. The development of water within the retained soils would result in hydrostatic loads on the walls that could result in large wall deformations or wall failure. Therefore, we recommend that the wall be constructed with an appropriate drainage system that will prevent the accumulation of hydrostatic pressure on the wall.

Drains provided behind walls should consist of a 4- to 6-inch diameter, perforated, rigid plastic pipe, bedded and backfilled with Gravel Backfill for Drains, as specified in Section 9-03.12(4) of the WSDOT *Standard Specifications* (WSDOT, 2025). The drain rock should surround the drainpipe by at least 6 inches. The pipes should slope to drain to a suitable outlet.

4.5 LUMINAIRE FOUNDATIONS

It is our understanding that the project improvements will include new luminaires within the proposed plaza area. Allowable lateral bearing pressure values are provided in Table 17-2 of the *WSDOT Geotechnical Design Manual* (WSDOT, 2022), based on SPT blow counts.

The average SPT values in the upper 8 feet of our explorations varied from about 11 to 20. With an average SPT value of about 16 and the lowest SPT value being 7. This indicates a large range of allowable lateral bearing pressures. Based on the variability of consistency and compaction of the existing fill, we recommend luminaire foundations be designed based on an average allowable lateral bearing pressure of 1,500 psf for the upper 8 feet, equivalent to an SPT value of 10. If higher bearing pressures are needed, we can evaluate specific locations and depths.

4.5.1 Luminaire Construction Considerations

The drilled shaft excavations for the luminaire foundations will extend through and bear in the existing fill. The existing fill generally consists of loose to medium dense, silty sand with gravel, and layers of stiff to very stiff, sandy silt and clayey, silty sand. These materials will be prone to caving during shaft excavation. The contractor should be prepared to case the drilled shaft excavations, as needed.

Perched groundwater seepage could be encountered within sandy layers within the existing fill, particularly during periods of wet weather. The drilled shaft contractor should be prepared to control groundwater, perched water, and/or surface water entering and collecting inside the drilled shaft excavation. If groundwater seepage is encountered and standing water is present at the base of the drilled shaft excavation, concrete should be pumped to the base of the drilled shaft excavation by the tremie method rather than end-dumped from the surface, to facilitate displacement of the standing water.

Drilled shaft excavation and concrete placement should be observed by a qualified geotechnical engineer, or their representative. This will allow the opportunity to confirm conditions indicated by the explorations and/or provide corrective recommendations adapted to conditions revealed during construction.

4.6 GENERAL EARTHWORK RECOMMENDATIONS

Earthwork activities will be required to raise grades and construct the proposed plaza improvements. Recommendations for permanent slopes, subgrade preparation, and structural fill placement and compaction are discussed below.

4.6.1 Subgrade Preparation

Subgrade preparation prior to the placement of structural fill will require removal of the upper portion of the existing wall and geogrid in the vicinity of the new wall to be able install the new SEW. Subgrade preparation should include removal of all topsoil, existing landscaping, organic-rich soils, debris, and vegetation within the area of the proposed improvements. Additionally, existing landscaping vegetation in the area of the proposed improvements should be removed to the full depths of the roots. Depending on the methods used to remove the root balls, considerable disturbance and loosening of the subgrade could occur during grubbing. We recommend that soil disturbed during the grubbing operations be removed to expose firm subgrade, and the resulting excavations be backfilled with structural fill.

The soils should be excavated to the design elevation for proposed improvements and the exposed subgrade soils should be evaluated to assess their suitability for support of the improvements prior to thorough compaction. Areas accessible to fully-loaded dump trucks, or similar heavy, wheeled equipment, should be proof-rolled prior to placement of structural fill or construction of improvements. Any areas exhibiting pumping or heaving should be delineated and over-excavated to reach competent soils, as determined by the geotechnical engineer. Areas inaccessible to large equipment should be evaluated by the geotechnical engineer using a T-handle probe, or other suitable method. Areas found to be soft/loose, or unsuitable, should be over-excavated to reach competent soils as directed by the geotechnical engineer. Structural fill should consist of imported, clean, free-draining, granular soils free from organic matter or other deleterious materials. Such materials should be less than 4 inches in maximum particle dimension, with less than 7 percent fines (portion passing the U.S. Standard No. 200 sieve), as specified for Gravel Borrow in Section 9-03.14(1) of the WSDOT *Standard Specifications* (WSDOT, 2025). The fine-grained portion of structural fill soils should be non-plastic.

4.6.2 Structural Fill Materials and Compaction

Any material used to support new pavement or hardscape areas should consist of Crushed Surfacing Top Course (CSTC) or Crushed Surfacing Base Course (CSBC), as specified in

Section 9-03.9(3) of the WSDOT *Standard Specifications* (WSDOT, 2025). Structural fill used to raise site grades could consist of granular materials such as Gravel Borrow, meeting the requirements of Section 9-03.14(1) of the WSDOT *Standard Specifications* (WSDOT, 2025).

Based on our subsurface explorations, we anticipate some of the on-site soils will be suitable for reuse as structural fill (except in areas where CSTC is required) provided certain requirements are met. Oversize materials (greater than 4 inches), as well as any organic or other deleterious materials, should be removed from materials to be used as structural fill. Use of onsite materials should be evaluated by the geotechnical engineer. Most of the existing fill soils have a high fines content and are considered moisture sensitive and will likely become unworkable when wet. Moisture conditioning may be required to ensure that soils to be used as structural fill are not too wet or too dry for proper compaction.

A sufficient number of modified Proctor tests should be performed on the materials to be used as structural fill to properly evaluate the compaction characteristics of the materials. To be used as structural fill, the native soils should be within 2% (+/-) of optimum moisture content, as determined by modified Proctor testing. A geotechnical engineer, or their representative, should perform full-time construction monitoring of all fill placement and compaction operations. If the on-site soils are placed either too wet or too dry of optimum moisture content, or if the soils are inadequately compacted, significant settlement should be anticipated.

Structural fill soils should be moisture conditioned, placed in loose horizontal lifts less than 8-inches thick, and compacted to at least 95% of the maximum dry density (MDD) as determined using test method ASTM D1557 (modified Proctor). Achievement of proper density of a compacted fill depends on the size and type of compaction equipment, the number of passes, thickness of the layer being compacted and soil moisture-density properties. In areas where limited space restricts the use of heavy equipment, smaller equipment can be used, but the soil must be placed in thin enough layers to achieve the required relative compaction. Generally, loosely compacted soils result from poor construction technique and/or improper moisture content. Soils with high fines contents are particularly susceptible to becoming too wet, and coarse-grained materials easily become too dry for proper compaction.

4.6.3 Temporary Excavations

We anticipate that temporary excavations will be necessary to construct some of the proposed improvements. Maintenance of safe working conditions, including temporary excavation stability, is the responsibility of the contractor. All temporary excavations more than 4 feet in depth must be sloped in accordance with Part N of WAC (Washington Administrative Code) 296-155 or be shored. The existing fill soils classify as Type C soil, for which WAC requires that unsupported excavations be inclined no steeper than 1.5H:1V. This assumes that adequate dewatering has been provided to maintain stable slopes during excavation. Flatter slopes may be necessary where near surface runoff or ground water impacts the stability of the temporary

slopes. The slopes should be monitored, and slope angles adjusted in the field based on local subsurface conditions and the contractor's methods.

If shoring is required, the design, installation, maintenance and removal of temporary shoring should be the responsibility of the contractor. The shoring system should be designed by a qualified and licensed engineer experienced with shoring design for deep excavations within similar soil conditions. We recommend that the design of the temporary shoring system be submitted by the contractor, for approval, prior to starting excavation. HWA should be allowed to review shop drawings and calculations for proposed shoring systems to check for consistency with the recommendations included in this report.

4.6.4 Permanent Slopes

The portion of the existing SEW to the south of the crossing with the proposed SEW could be rebuilt or graded in front of the new wall. We recommend that compacted fill slopes, or bank slopes that may be needed for the project, be constructed/restored no steeper than 2H:1V. For fill slopes constructed at 2H:1V or flatter, comprised of fill soils placed and compacted as structural fill as described in Section 5.6.2 of this report, we anticipate that adequate factors of safety against global failure will be maintained. Measures should be taken to prevent surficial instability and/or erosion of embankment material. This can be accomplished by conscientious compaction of the embankment fills in level lifts, benched cuts into the slope face, maintaining adequate drainage, and planting the disturbed slope face with vegetation as soon as possible after construction. To achieve the specified relative compaction at the slope face, it may be necessary to overbuild the slopes several feet, and then trim back to finish grade.

4.6.5 Temporary Erosion Control

We recommend that temporary erosion control incorporate Best Management Practices (BMPs) to reduce the potential for erosion at the site during construction. These measures include an erosion control plan that specifies methods for limiting activity during wet periods, placement of a silt retention system on the downslope side of the alignment, and proper disposal or re-compaction of any materials that are disturbed on the site.

4.6.6 Wet Weather Earthwork

We recommend all earthwork occur during the dry summer months to avoid delays and costs associated with working in wet conditions. General recommendations relative to earthwork performed in wet weather or in wet conditions are presented below. These recommendations should be incorporated into the contract specifications.

- Earthwork should be performed in small areas to minimize exposure to wet weather. Excavation of unsuitable and/or softened soil should be followed promptly by placement and compaction of clean structural fill. The size and type of construction

equipment used may need to be limited to prevent soil disturbance. Under some circumstances, it may be necessary to excavate soils with a backhoe to minimize subgrade disturbance caused by equipment traffic.

- Material used as excavation backfill in wet weather should consist of clean granular soil with less than 5 percent passing the U.S. No. 200 sieve, based on wet sieving the fraction passing the ¾-inch sieve. The fines should be non-plastic. It should be noted this is an additional restriction on the structural fill materials specified.

- The ground surface within the construction area should be graded to promote surface water run-off and to prevent ponding.

- Within the construction area, the ground surface should be sealed on completion of each shift by a smooth drum vibratory roller, or equivalent, and under no circumstances should soil be left uncompacted and exposed to moisture infiltration.

- Excavation and placement of backfill materials should be monitored by a geotechnical engineer experienced in wet weather earthwork to determine that the work is being accomplished in accordance with the project specifications and the recommendations contained herein.

5. CONDITIONS AND LIMITATIONS

We have prepared this report for the City of Mountlake Terrace and the Otak design team for use in evaluation of this project. The conclusions and interpretations presented in this report should not be construed as our warranty of subsurface conditions at the site. Experience has shown that soil and ground water conditions can vary significantly over small distances and with time. Inconsistent conditions can occur between explorations that may not be detected by a geotechnical study of this scope and nature.

Within the limitations of approved scope, schedule and budget, HWA attempted to execute these services in accordance with generally accepted professional principles and practices in the fields of geotechnical engineering and engineering geology at the time the report was prepared. No warranty, express or implied, is made.

HWA does not practice or consult in the field of safety engineering. We do not direct the contractor's operations and cannot be responsible for the safety of personnel other than our own on the site. As such, the safety of others is the responsibility of the contractor. However, the contractor should notify the owner if any of the recommended actions presented herein are considered unsafe.

November 17, 2025
HWA Project No. 2022-110-21

We appreciate the opportunity to provide geotechnical services on this project. Should you have any questions or comments, or if we may be of further service, please do not hesitate to call.

Sincerely,

HWA GEOSCIENCES INC.

Joe Westergreen, P.E.
Geotechnical Engineer

Bryan Hawkins, P.E.
Senior Geotechnical Engineer

REFERENCES

American Association of State Highway and Transportation Officials (AASHTO), 2011, *Guide Specifications for LRFD Seismic Bridge Design*, 2nd Edition, Washington D.C.

American Associate of State Highway and Transportation Officials (AASHTO), 2020, *LRFD Bridge Design Specifications*, Ninth Edition, Washington D.C.

American Society of Civil Engineers (ASCE) 7-16, *Minimum Design Loads and Associated Criteria for Buildings and Other Structures*.

Minard, J.P., 1983, *Geologic Map of the Edmonds East and Part of the Edmonds West Quadrangles, Washington*: U.S. Geological Survey, Miscellaneous Field Studies Map MF-1541, scale 1:24,000.

Petersen, M.D., Moschetti, M.P., Powers, P.M., Mueller, C.S., Haller, K.M., Frankel, A.D., Zeng, Yuehua, Rezaeian, Sanaz, Harmsen, S.C., Boyd, O.S., Field, Ned, Chen, Rui, Rukstales, K.S., Luco, Nico, Wheeler, R.L., Williams, R.A., and Olsen, A.H., 2014, *Documentation for the 2014 update of the United States national seismic hazard maps*, U.S. Geological Survey Open-File Report 2014–1091, 243 p.

U.S. Geological Survey, 2021, Unified Hazard Tool, Earthquake Hazards Program, https://earthquake.usgs.gov/hazards/interactive/

Washington State Department of Transportation (WSDOT), 2023, *Bridge Design Manual (LRFD)*, M 23-50.

Washington State Department of Transportation (WSDOT), 2025, *Standard Specifications for Road, Bridge and Municipal Construction*, M 41-10.

WSDOT, Memo to Designers, 2017*, AASHTO Guide Specifications for LRFD Seismic Bridge Design Amendments* dated January 8, 2017

SITE MAP

0 200' 400' 600' 800'

SCALE: 1" = 400'

N

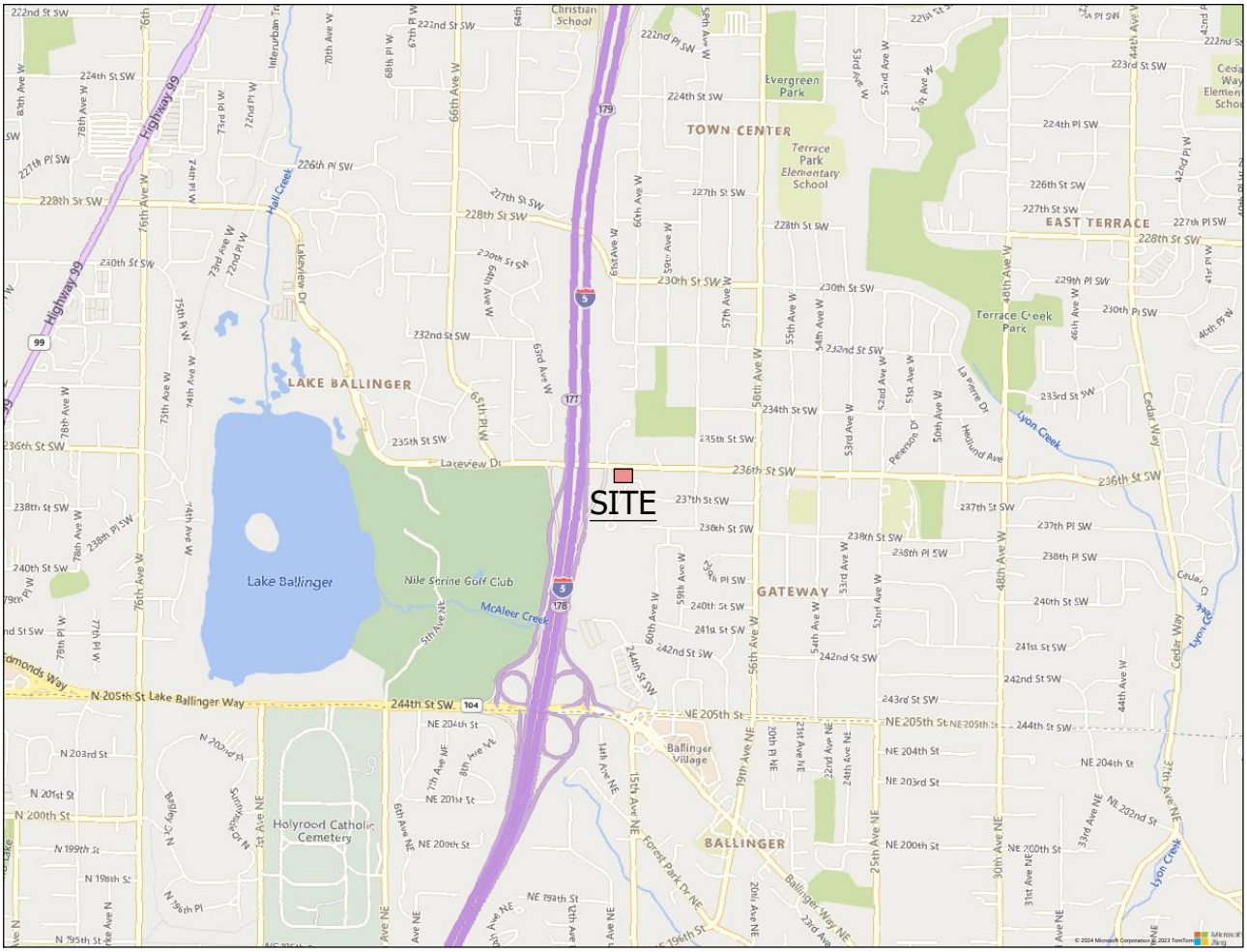

VICINITY MAP

0 1000' 2000' 3000' 4000'

SCALE: 1" = 2000'

N

GEOSCIENCES INC.
DBE/MWBE

SITE AND VICINITY MAP

TRANSIT CONNECTION CORRIDOR PROJECT
GATEWAY PLAZA
MOUNTLAKE TERRACE, WASHINGTON

FIGURE NO.: 1

DRAWN BY: CF

CHECK BY: JTW

PROJECT # 2022-110-21

C:\USERS\CFRY\DESKTOP\2022-110-21 MOUNTLAKE TRANSIT CONNECT CORRIDOR (GATEWAY PLAZA)\2022-110-21 MOUNTLAKE TRANSIT CONNECT CORRIDOR (GATEWAY PLAZA).DWG - cfr Plotted: 2/19/2024 1:42 PM

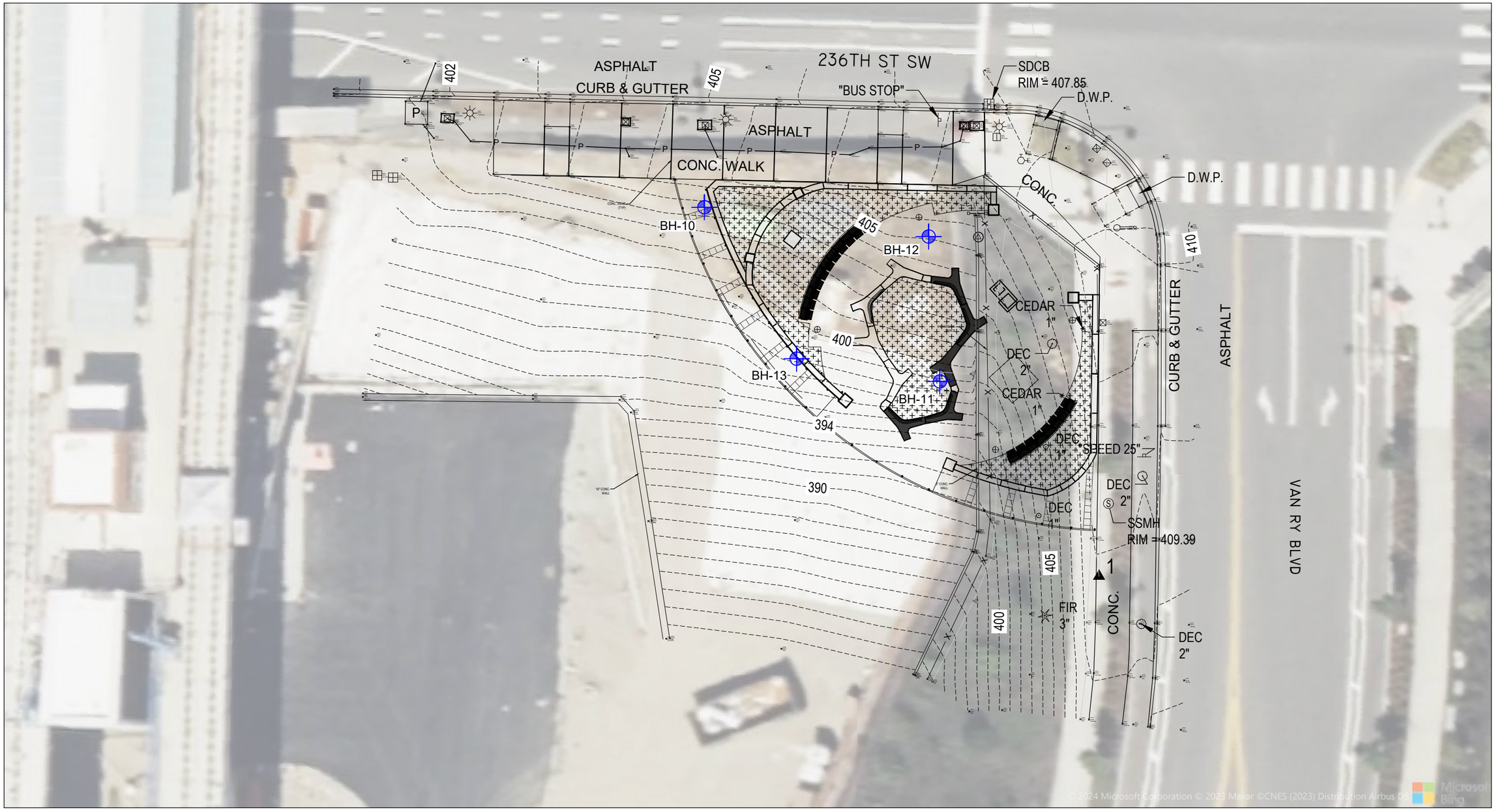

GATEWAY PLAZA
Scale: 1" = 20'-0"

EXPLORATION LEGEND

BH-10 ⊕ BOREHOLE DESIGNATION AND APPROXIMATE LOCATION (HWA, 2024)

N

0 10 20 30 40
SCALE: 1" = 20'

BASE MAP PROVIDED BY: BING AND OTAK 01.23.2024

HWA GEOSCIENCES INC. DBE/MWBE

TRANSIT CONNECTION CORRIDOR PROJECT
GATEWAY PLAZA
MOUNTLAKE TERRACE, WASHINGTON

SITE & EXPLORATION PLAN

DRAWN BY:	FIGURE NO.:
CF	2
CHECK BY:	PROJECT NO.:
JTW	2022-110-21

C:\USERS\CFRY\DESKTOP\2022-110-21 MOUNTLAKE TRANSIT CONNECT CORRIDOR (GATEWAY PLAZA)\2022-110-21 MOUNTLAKE TRANSIT CONNECT CORRIDOR (GATEWAY PLAZA).DWG <2> Plotted: 2/19/2024 1:43 PM

APPENDIX A

FIELD INVESTIGATION

RELATIVE DENSITY OR CONSISTENCY VERSUS SPT N-VALUE

COHESIONLESS SOILS			COHESIVE SOILS		
Density	N (blows/ft)	Approximate Relative Density(%)	Consistency	N (blows/ft)	Approximate Undrained Shear Strength (psf)
Very Loose	0 to 4	0 - 15	Very Soft	0 to 2	<250
Loose	4 to 10	15 - 35	Soft	2 to 4	250 - 500
Medium Dense	10 to 30	35 - 65	Medium Stiff	4 to 8	500 - 1000
Dense	30 to 50	65 - 85	Stiff	8 to 15	1000 - 2000
Very Dense	over 50	85 - 100	Very Stiff	15 to 30	2000 - 4000
			Hard	over 30	>4000

USCS SOIL CLASSIFICATION SYSTEM

MAJOR DIVISIONS			GROUP DESCRIPTIONS	
Coarse Grained Soils	Gravel and Gravelly Soils	Clean Gravel (little or no fines)	GW	Well-graded GRAVEL
	More than 50% of Coarse Fraction Retained on No. 4 Sieve		GP	Poorly-graded GRAVEL
		Gravel with Fines (appreciable amount of fines)	GM	Silty GRAVEL
			GC	Clayey GRAVEL
	Sand and Sandy Soils	Clean Sand (little or no fines)	SW	Well-graded SAND
			SP	Poorly-graded SAND
More than 50% Retained on No. 200 Sieve Size	50% or More of Coarse Fraction Passing No. 4 Sieve	Sand with Fines (appreciable amount of fines)	SM	Silty SAND
			SC	Clayey SAND
Fine Grained Soils	Silt and Clay	Liquid Limit Less than 50%	ML	SILT
			CL	Lean CLAY
			OL	Organic SILT/Organic CLAY
50% or More Passing No. 200 Sieve Size	Silt and Clay	Liquid Limit 50% or More	MH	Elastic SILT
			CH	Fat CLAY
			OH	Organic SILT/Organic CLAY
Highly Organic Soils			PT	PEAT

TEST SYMBOLS

%F	Percent Fines
AL	Atterberg Limits: PL = Plastic Limit, LL = Liquid Limit
CBR	California Bearing Ratio
CN	Consolidation
DD	Dry Density (pcf)
DS	Direct Shear
GS	Grain Size Distribution
K	Permeability
MD	Moisture/Density Relationship (Proctor)
MR	Resilient Modulus
OC	Organic Content
pH	pH of Soils
PID	Photoionization Device Reading
PP	Pocket Penetrometer (Approx. Comp. Strength, tsf)
Res.	Resistivity
SG	Specific Gravity
CD	Consolidated Drained Triaxial
CU	Consolidated Undrained Triaxial
UU	Unconsolidated Undrained Triaxial
TV	Torvane (Approx. Shear Strength, tsf)
UC	Unconfined Compression

SAMPLE TYPE SYMBOLS

- 2.0" OD Split Spoon (SPT) (140 lb. hammer with 30 in. drop)
- Shelby Tube
- Non-standard Penetration Test (3.0" OD Split Spoon with Brass Rings)
- Small Bag Sample
- Large Bag (Bulk) Sample
- Core Run
- 3-1/4" OD Split Spoon

GROUNDWATER SYMBOLS

- Groundwater Level (measured at time of drilling)
- Groundwater Level (measured in well or open hole after water level stabilized)

COMPONENT DEFINITIONS

COMPONENT	SIZE RANGE
Boulders	Larger than 12 in
Cobbles	3 in to 12 in
Gravel	3 in to No 4 (4.5mm)
Coarse gravel	3 in to 3/4 in
Fine gravel	3/4 in to No 4 (4.5mm)
Sand	No. 4 (4.5 mm) to No. 200 (0.074 mm)
Coarse sand	No. 4 (4.5 mm) to No. 10 (2.0 mm)
Medium sand	No. 10 (2.0 mm) to No. 40 (0.42 mm)
Fine sand	No. 40 (0.42 mm) to No. 200 (0.074 mm)
Silt and Clay	Smaller than No. 200 (0.074mm)

COMPONENT PROPORTIONS

PROPORTION RANGE	DESCRIPTIVE TERMS
< 5%	Clean
5 - 12%	Slightly (Clayey, Silty, Sandy)
12 - 30%	Clayey, Silty, Sandy, Gravelly
30 - 50%	Very (Clayey, Silty, Sandy, Gravelly)
Components are arranged in order of increasing quantities.	

NOTES: Soil classifications presented on exploration logs are based on visual and laboratory observation.
Soil descriptions are presented in the following general order:

Density/consistency, color, modifier (if any) GROUP NAME, additions to group name (if any), moisture content. Proportion, gradation, and angularity of constituents, additional comments. (GEOLOGIC INTERPRETATION)

Please refer to the discussion in the report text as well as the exploration logs for a more complete description of subsurface conditions.

MOISTURE CONTENT

DRY	Absence of moisture, dusty, dry to the touch.
MOIST	Damp but no visible water.
WET	Visible free water, usually soil is below water table.

GeoSciences Inc.

Transit Connection Corridor Project - Gateway Plaza
Mountlake Terrace, Washington

LEGEND OF TERMS AND SYMBOLS USED ON EXPLORATION LOGS

PROJECT NO.: 2022-110-21 FIGURE: A-1

LEGEND 2022-110-21 MLT.GPJ 2/19/24

DRILLING COMPANY: BoreTec, Inc.
DRILLING METHOD: Hollow Stem Auger
SAMPLING METHOD: SPT - Rope & Cathead
LOCATION: See Figure 2

DATE STARTED: 11/9/2023
DATE COMPLETED: 11/9/2023
LOGGED BY: L. Cressler

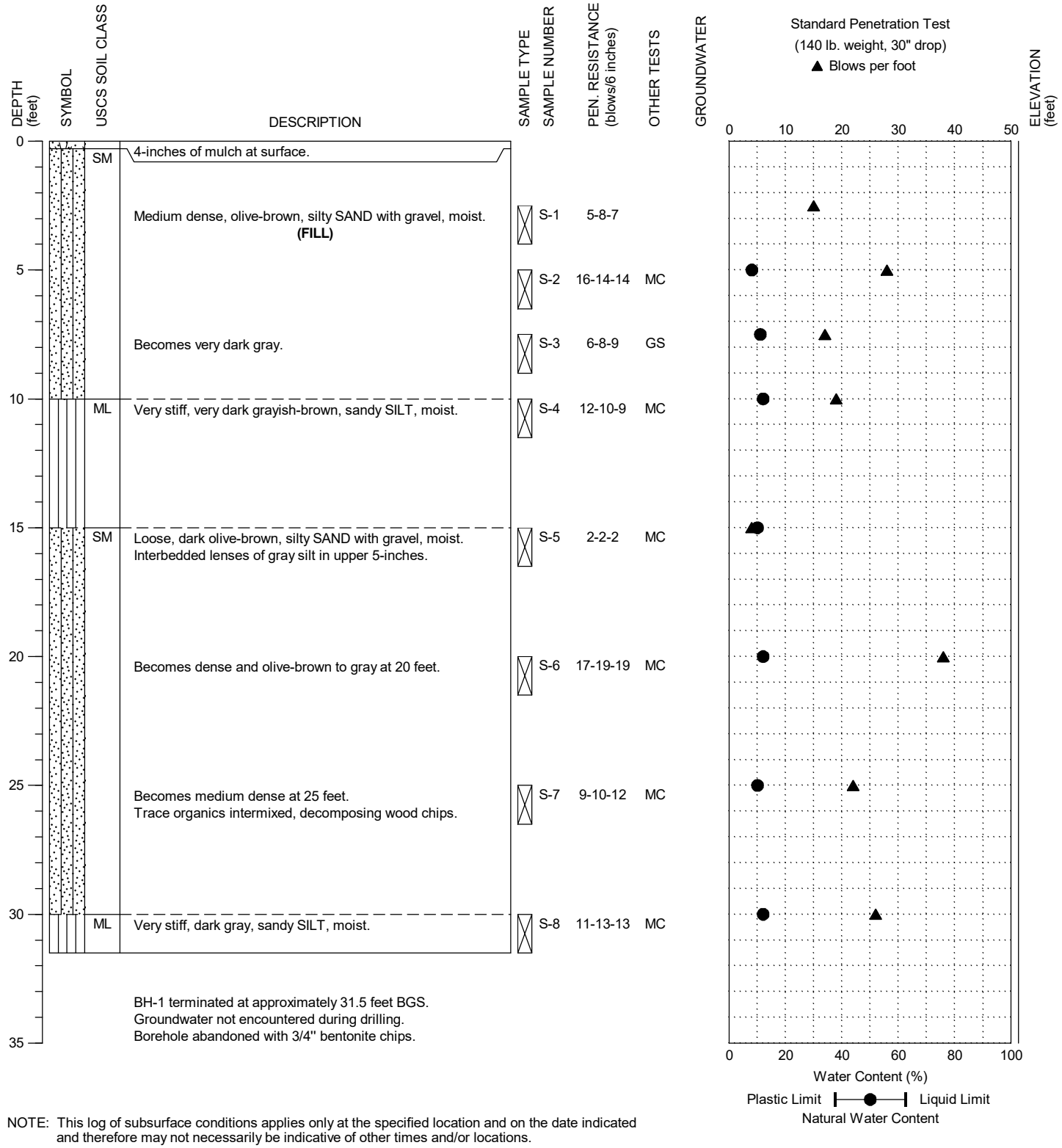

NOTE: This log of subsurface conditions applies only at the specified location and on the date indicated and therefore may not necessarily be indicative of other times and/or locations.

GeoSciences Inc.

Transit Connection Corridor Project - Gateway Plaza
Mountlake Terrace, Washington

BORING:
BH-10

PAGE: 1 of 1

PROJECT NO.: 2022-110-21 FIGURE: A-2

BORING-DSM 2022-110-21 MLT.GPJ 2/19/24

DRILLING COMPANY: BoreTec, Inc.
DRILLING METHOD: Hollow Stem Auger
SAMPLING METHOD: SPT - Rope & Cathead
LOCATION: See Figure 2

DATE STARTED: 11/9/2023
DATE COMPLETED: 11/9/2023
LOGGED BY: L. Cressler

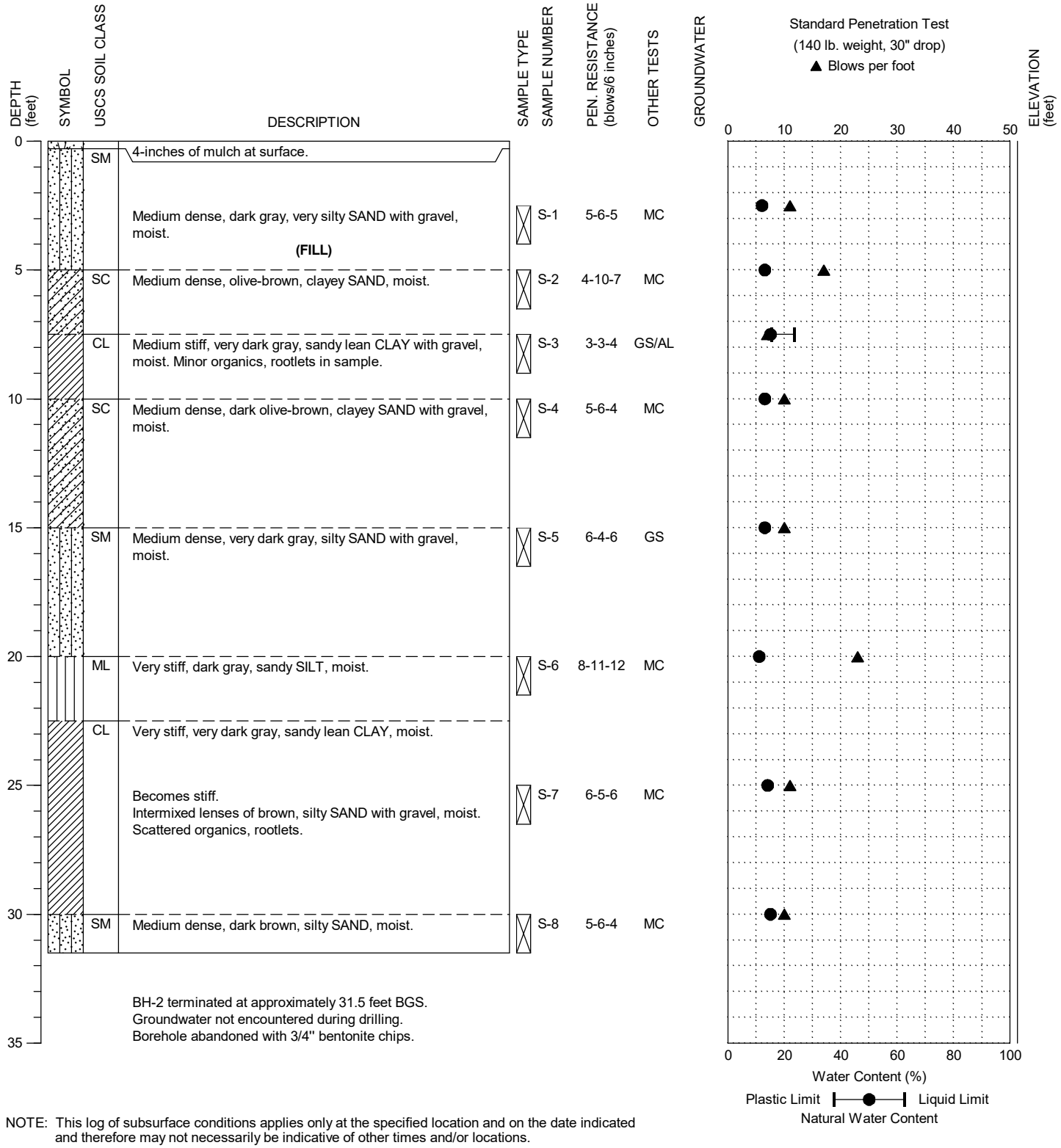

NOTE: This log of subsurface conditions applies only at the specified location and on the date indicated and therefore may not necessarily be indicative of other times and/or locations.

GeoSciences Inc.

Transit Connection Corridor Project - Gateway Plaza
Mountlake Terrace, Washington

BORING: BH-11

PAGE: 1 of 1

PROJECT NO.: 2022-110-21 FIGURE: A-3

BORING-DSM 2022-110-21 MLT.GPJ 2/19/24

DRILLING COMPANY: BoreTec, Inc.
DRILLING METHOD: Hollow Stem Auger
SAMPLING METHOD: SPT - Rope & Cathead
LOCATION: See Figure 2

DATE STARTED: 11/9/2023
DATE COMPLETED: 11/9/2023
LOGGED BY: L. Cressler

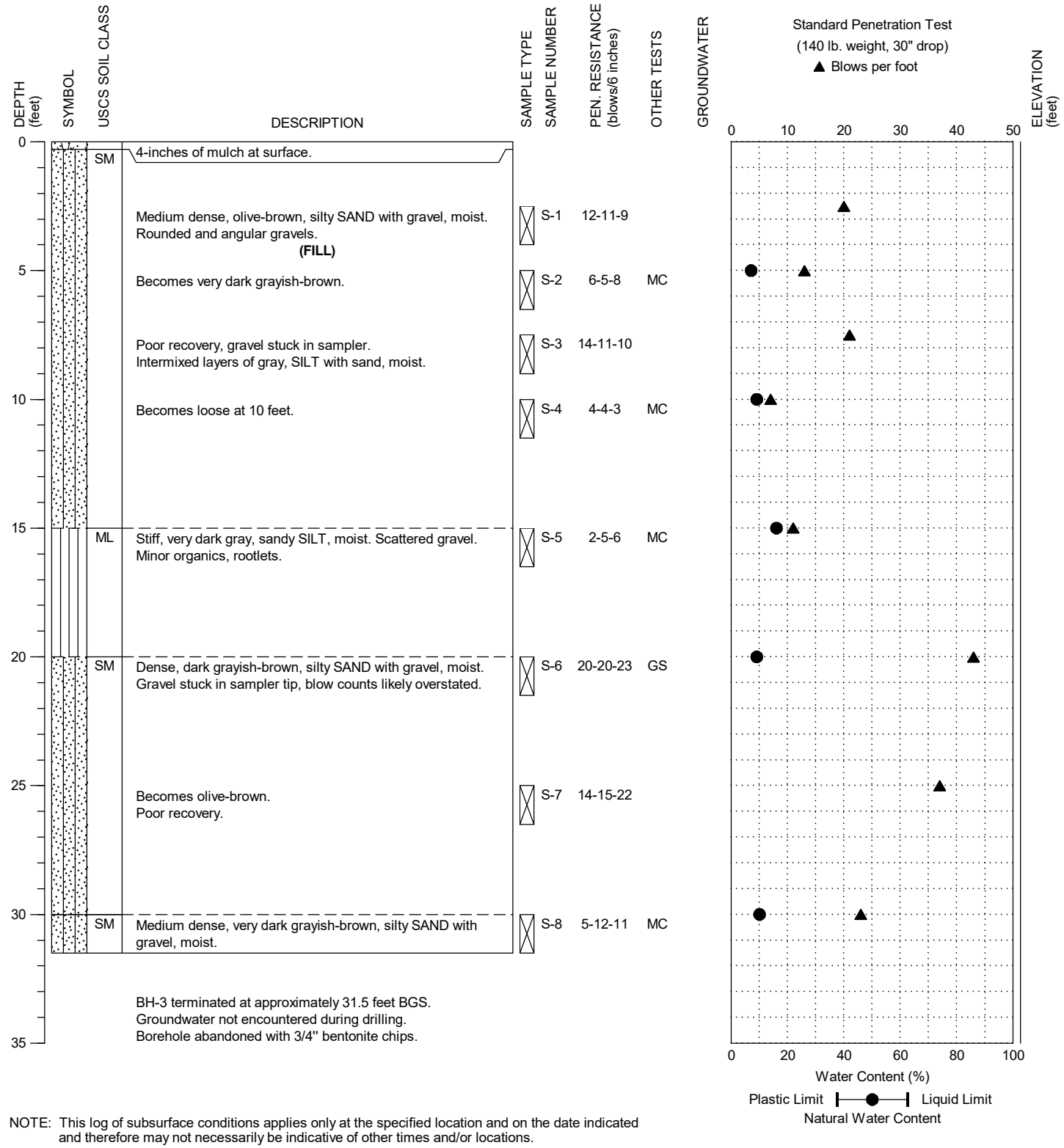

NOTE: This log of subsurface conditions applies only at the specified location and on the date indicated and therefore may not necessarily be indicative of other times and/or locations.

GeoSciences Inc.

Transit Connection Corridor Project - Gateway Plaza
Mountlake Terrace, Washington

BORING: BH-12

PAGE: 1 of 1

PROJECT NO.: 2022-110-21 FIGURE: A-4

BORING-DSM 2022-110-21 MLT.GPJ 2/19/24

DRILLING COMPANY: BoreTec, Inc.
DRILLING METHOD: Hollow Stem Auger
SAMPLING METHOD: SPT - Rope & Cathead
LOCATION: See Figure 2

DATE STARTED: 11/9/2023
DATE COMPLETED: 11/9/2023
LOGGED BY: L. Cressler

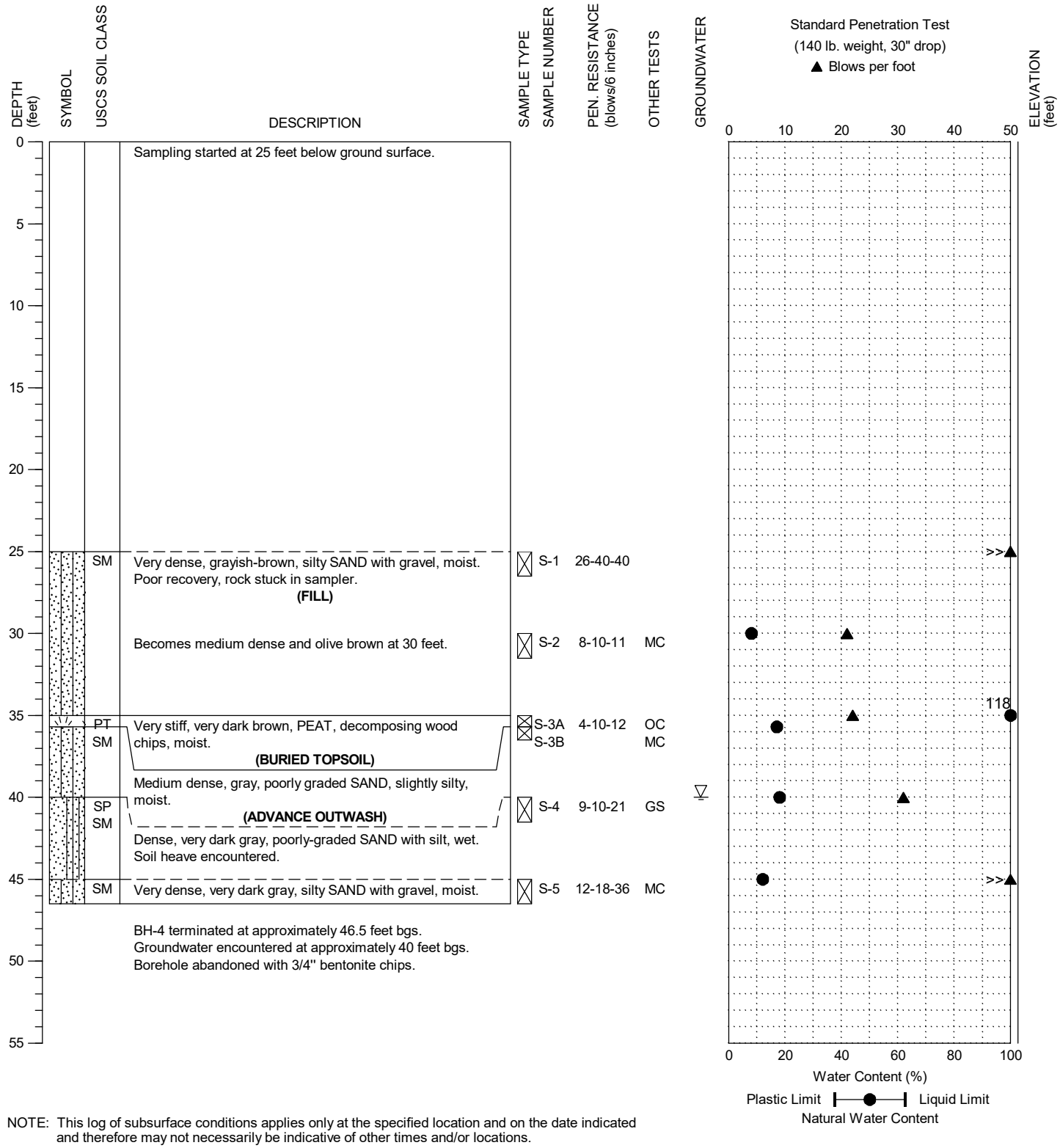

NOTE: This log of subsurface conditions applies only at the specified location and on the date indicated and therefore may not necessarily be indicative of other times and/or locations.

GeoSciences Inc.

Transit Connection Corridor Project - Gateway Plaza
Mountlake Terrace, Washington

BORING: BH-13

PAGE: 1 of 1

PROJECT NO.: 2022-110-21 FIGURE: A-5

BORING-DSM 2022-110-21 MLT.GPJ 2/19/24

APPENDIX B

LABORATORY TESTING

APPENDIX B

LABORATORY TESTING

Representative soil samples obtained from our explorations were placed in plastic bags to prevent loss of moisture and transported to our Bothell, Washington, laboratory for further examination and testing. Laboratory tests were conducted on selected soil samples to characterize relevant engineering and index properties of the soils. Laboratory testing was conducted as described below:

Moisture Content of Soil: Laboratory tests were conducted to determine the natural moisture content of selected soil samples, in general accordance with ASTM D 2216. Test results are indicated at the sampled intervals on the appropriate exploration logs in Appendix A and on the Summary of Materials Properties reports, Figures B-1 and B-2.

MOISTURE CONTENT, ASH, AND ORGANIC MATTER: A single sample was tested in general accordance with method ASTM D 2974, using moisture content method 'A' (oven dried at 105^0 C) and ash content method 'C' (burned at 440^0 C). The results are shown on the Summary of Material Properties report, Figure B-2. The results are percent by weight of dry soil.

Particle Size Analysis of Soils: Selected samples were tested to determine the particle size distribution of material in general accordance with ASTM 6913 / D7928. The results are summarized on the Summary of Materials Properties reports, Figures B-1 and B-2 and the Particle-Size Analysis of Soils reports, Figure B-3 and B-4, and provide information regarding the classification of the sample.

Liquid Limit, Plastic Limit, and Plasticity Index of Soils (Atterberg Limits): A single sample was tested using method ASTM D 4318, multi-point method. The results are reported on the attached Liquid Limit, Plastic Limit, and Plasticity Index report, Figure B-5.

EXPLORATION DESIGNATION	TOP DEPTH (feet)	BOTTOM DEPTH (feet)	MOISTURE CONTENT (%)	ORGANIC CONTENT (%)	SPECIFIC GRAVITY	ATTERBERG LIMITS (%)			% GRAVEL	% SAND	% FINES	ASTM SOIL CLASSIFICATION	SAMPLE DESCRIPTION
						LL	PL	PI					
BH-10,S-2	5.0	6.5	7.6									SM	Dark olive-brown, silty SAND
BH-10,S-3	7.5	9.0	11.5						12.2	45.7	42.1	SM	Very dark gray, silty SAND
BH-10,S-4	10.0	11.5	11.7									ML	Very dark grayish-brown, sandy SILT
BH-10,S-5	15.0	16.5	9.6									SM	Dark olive-brown, silty SAND
BH-10,S-6	20.0	21.5	12.4									SM	Dark olive-brown, silty SAND
BH-10,S-7	25.0	26.5	10.0									SM	Very dark gray, silty SAND with gravel
BH-10,S-8	30.0	31.5	11.8									ML	Dark gray, sandy SILT
BH-11,S-1	2.5	4.0	12.3									CL	Very dark gray, sandy lean CLAY
BH-11,S-2	5.0	6.5	12.7									SC	Olive-brown, clayey SAND
BH-11,S-3	7.5	9.0	15.3			23	15	8	6.6	34.9	58.5	CL	Very dark gray, sandy lean CLAY
BH-11,S-4	10.0	11.5	12.8									SC	Dark olive-brown, clayey SAND
BH-11,S-5	15.0	16.5	12.9						9.7	40.3	49.9	SM	Very dark gray, silty SAND
BH-11,S-6	20.0	21.5	11.3									CL	Very dark gray, sandy lean CLAY
BH-11,S-7	25.0	26.5	13.9									CL	Olive-gray, sandy lean CLAY
BH-11,S-8	30.0	31.5	14.7									SC	Dark brown, clayey SAND
BH-12,S-2	5.0	6.5	7.1									SM	Very dark grayish-brown, silty SAND with gravel
BH-12,S-4	10.0	11.5	8.8									SM	Very dark grayish-brown, silty SAND
BH-12,S-5	15.0	16.5	15.8									ML	Very dark gray, sandy SILT
BH-12,S-6	20.0	21.5	8.8						29.5	53.1	17.4	SM	Dark grayish-brown, silty SAND with gravel
BH-12,S-8	30.0	31.5	9.6									SM	Very dark grayish-brown, silty SAND with gravel

Notes: 1. This table summarizes information presented elsewhere in the report and should be used in conjunction with the report test, other graphs and tables, and the exploration logs.
2. The soil classifications in this table are based on ASTM D2487 and D2488 as applicable.

EXPLORATION DESIGNATION	TOP DEPTH (feet)	BOTTOM DEPTH (feet)	MOISTURE CONTENT (%)	ORGANIC CONTENT (%)	SPECIFIC GRAVITY	ATTERBERG LIMITS (%)			% GRAVEL	% SAND	% FINES	ASTM SOIL CLASSIFICATION	SAMPLE DESCRIPTION
						LL	PL	PI					
BH-13,S-2	30.0	31.5	8.5									SM	Olive-brown, silty SAND
BH-13,S-3A	35.0	35.7	117.7	27.6								PT	Very dark brown, PEAT
BH-13,S-3B	35.7	36.5	17.4									SM	Dark gray, silty SAND
BH-13,S-4	40.0	41.5	17.9						3.9	90.9	5.2	SP-SM	Very dark gray, poorly graded SAND with silt
BH-13,S-5	45.0	46.5	12.3									SM	Very dark gray, silty SAND with gravel

Notes: 1. This table summarizes information presented elsewhere in the report and should be used in conjunction with the report test, other graphs and tables, and the exploration logs.
2. The soil classifications in this table are based on ASTM D2487 and D2488 as applicable.

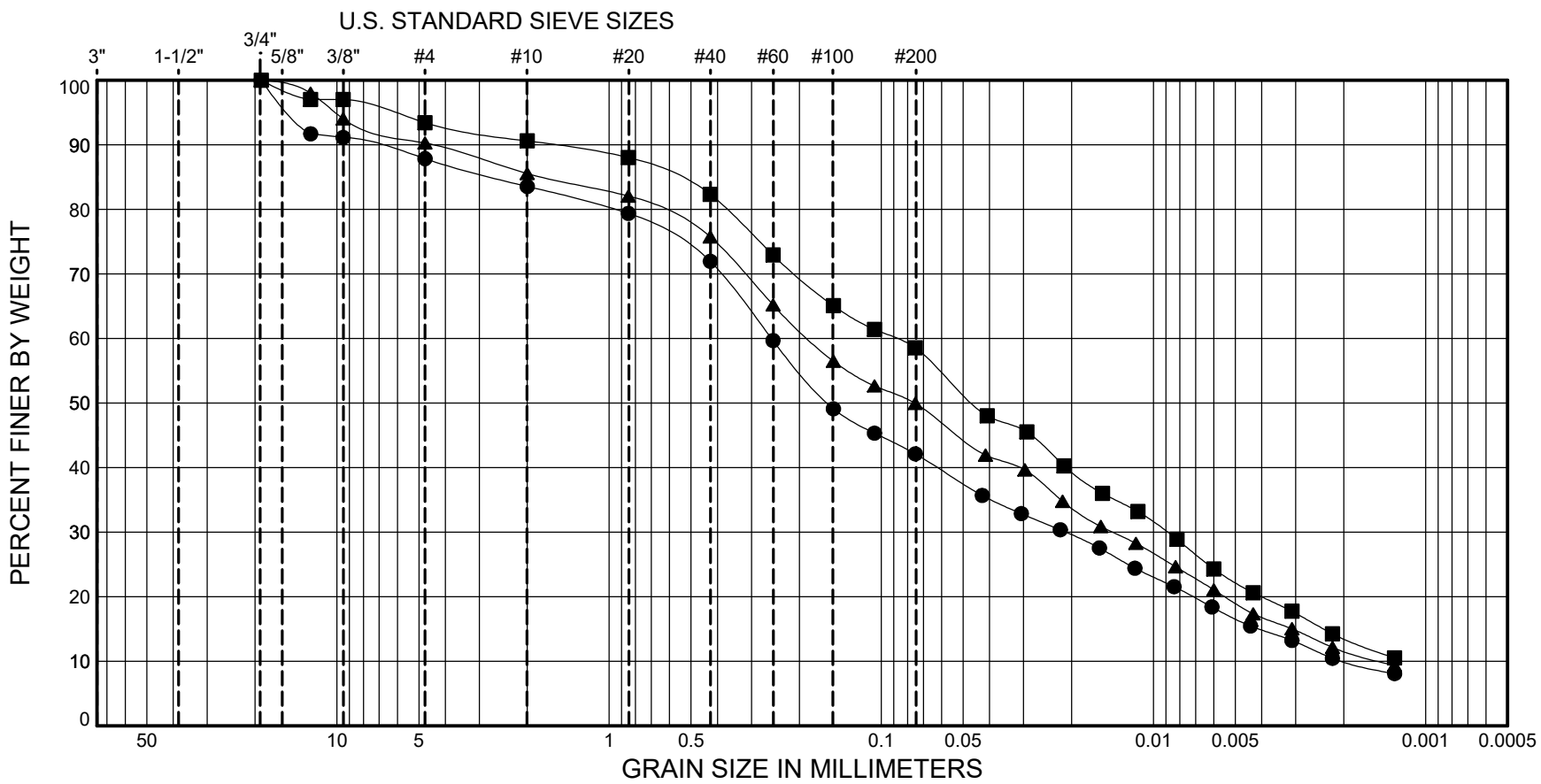

SYMBOL	SAMPLE		DEPTH (ft.)	CLASSIFICATION OF SOIL- ASTM D2487 Group Symbol and Name	% MC	LL	PL	PI	Gravel %	Sand %	Fines %
●	BH-10	S-3	7.5 - 9.0	(SM) Very dark gray, silty SAND	11				12.2	45.7	42.1
■	BH-11	S-3	7.5 - 9.0	(CL) Very dark gray, sandy lean CLAY	15	23	15	8	6.6	34.9	58.5
▲	BH-11	S-5	15.0 - 16.5	(SM) Very dark gray, silty SAND	13				9.7	40.3	49.9

HWA GeoSciences Inc.

Transit Connection Corridor Project - Gateway Plaza
Mountlake Terrace, Washington

PARTICLE-SIZE ANALYSIS
OF SOILS
METHOD ASTM D6913/D7928

PROJECT NO.: 2022-110-21 FIGURE: B-3

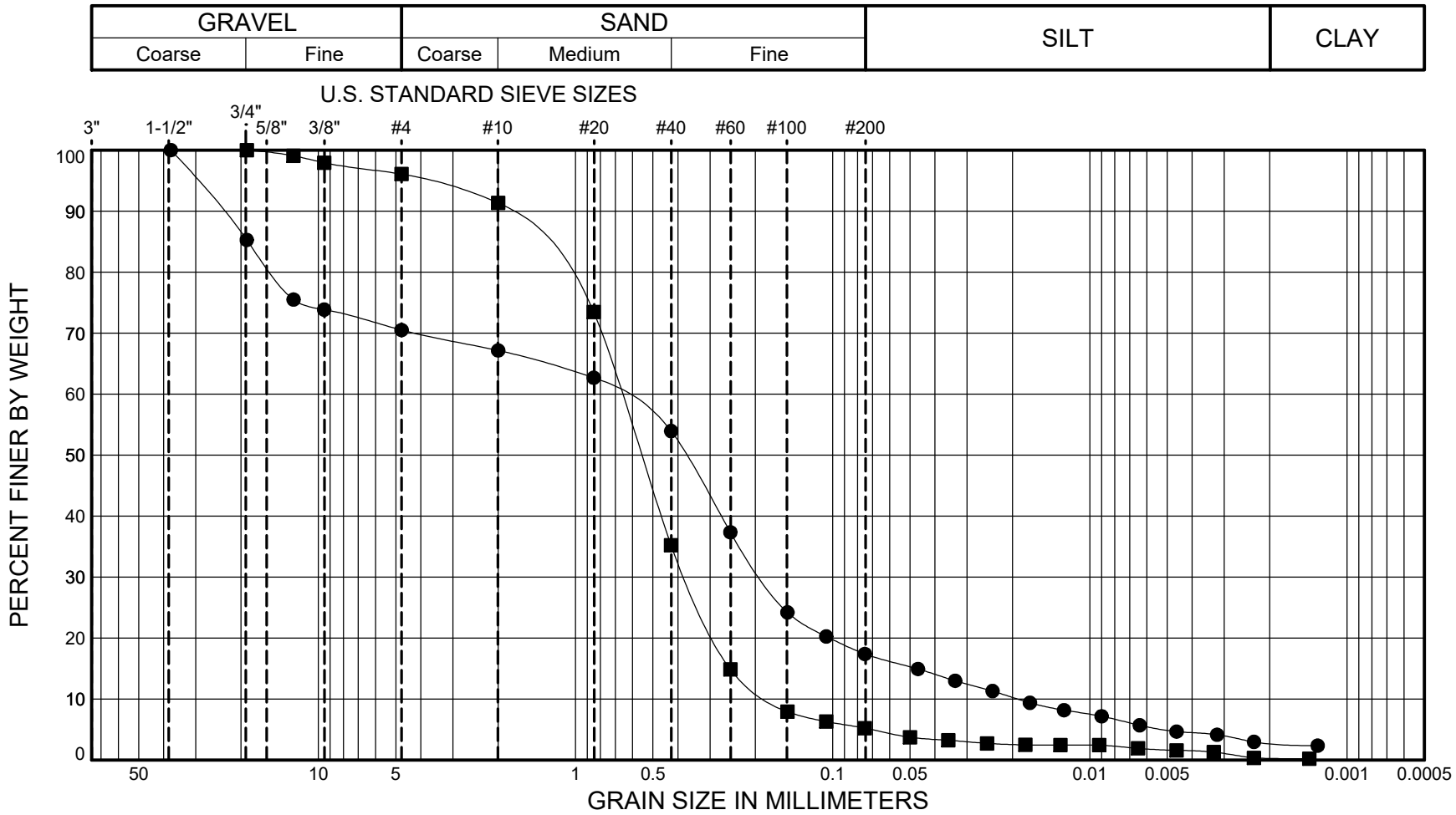

SYMBOL	SAMPLE		DEPTH (ft.)	CLASSIFICATION OF SOIL- ASTM D2487 Group Symbol and Name	% MC	LL	PL	PI	Gravel %	Sand %	Fines %
●	BH-12	S-6	20.0 - 21.5	(SM) Dark grayish-brown, silty SAND with gravel	9				29.5	53.1	17.4
■	BH-13	S-4	40.0 - 41.5	(SP-SM) Very dark gray, poorly graded SAND with silt	18				3.9	90.9	5.2

HWA GEOSCIENCES INC.

Transit Connection Corridor Project - Gateway Plaza
Mountlake Terrace, Washington

PARTICLE-SIZE ANALYSIS
OF SOILS
METHOD ASTM D6913/D7928

PROJECT NO.: 2022-110-21 FIGURE: B-4

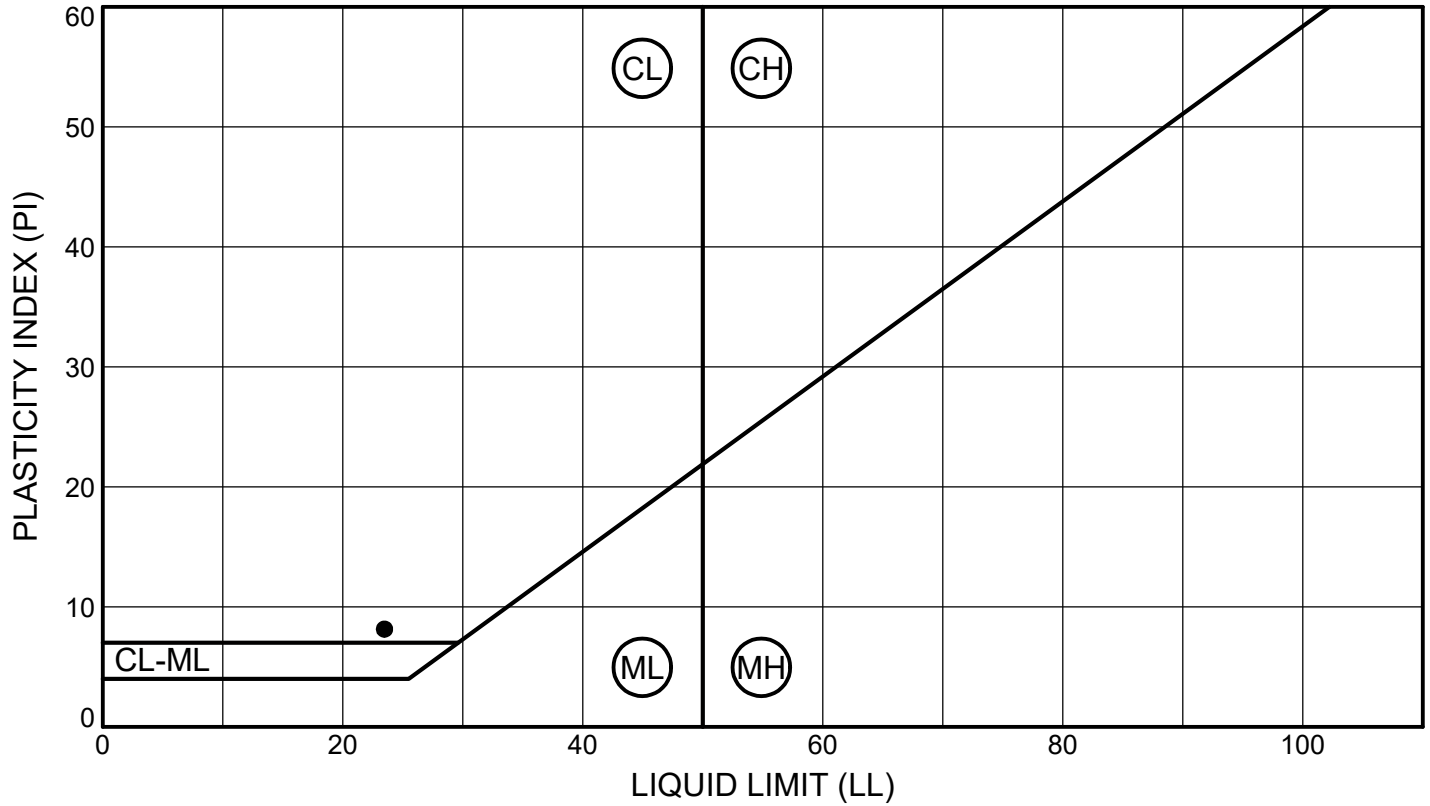

SYMBOL	SAMPLE		DEPTH (ft)	CLASSIFICATION	% MC	LL	PL	PI	% Fines
●	BH-11	S-3	7.5 - 9.0	(CL) Very dark gray, sandy lean CLAY	15	23	15	8	58.5

HWA GeoSciences Inc.

Transit Connection Corridor Project - Gateway Plaza
Mountlake Terrace, Washington

LIQUID LIMIT, PLASTIC LIMIT AND PLASTICITY INDEX OF SOILS
METHOD ASTM D4318

PROJECT NO.: 2022-110-21 FIGURE: B-5

APPENDIX G - Permits

Transit Connection Corridor – Pedestrian Plaza
6100 236th St SW
Mountlake Terrace, WA 98043

City Permits List

WSDOT Traffic Control Permit- NWS 2575-MLT

Civil Permit: C25-00080

Electrical Permit: ELEC25-00359

Building Permit Wall 1 (Reinforced Concrete Wall 1): WALL25-00006

Building Permit Wall 2 (Reinforced Concrete Wall 2): WALL25-00007

Building Permit Pedestrian Plaza Art Piece: BLD-C25-00045

Landscaping Permit: LI25-00005

*Building Permit Structural Earth Wall 3: Permit to be acquired by contractor.

APPENDIX H - Traffic Control Plan

CITY OF MOUNTLAKE TERRACE
TRANSIT CONNECTION CORRIDOR PROJECT

PROJECT NO. C2202

PROJECT MANAGER: DONNELLE DAYAO,
PARKS PROJECT MANAGER

236TH STREET SW TRAFFIC CONTROL PLAN FOR
SIDEWALK RECONSTRUCTION ON SOUTH SIDE OF 236TH.

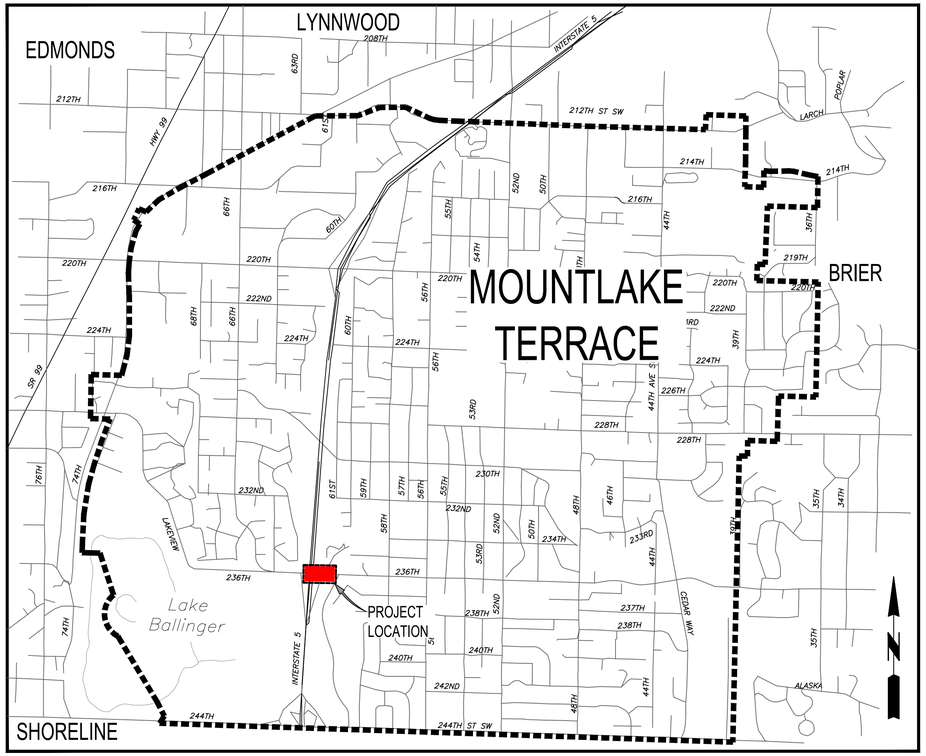

VICINITY MAP & SITE PLAN

CITY OF MOUNTLAKE TERRACE
ENGINEERING SERVICES DEPARTMENT
23204 58TH AVE W
MOUNTLAKE TERRACE, WA 98043
(425) 776-1161
FAX (425) 775-0420

CITY OF MOUNTLAKE TERRACE
TRANSIT CONNECTION CORRIDOR PROJECT
TRAFFIC CONTROL PLAN VICINITY MAP

DRAWING NO.: TC01
DRAWN BY: J. RIVERS
CHECKED BY: J. MAREK
APPROVED BY:
PROJECT ENGINEER
DATE:
REVISION
DESCRIPTION
HORIZONTAL SCALE:
VERTICAL SCALE:

N:\ENGINEER\CONSTRUCTION PROJECTS\2022\C2202-TRANSIT CONNECTION CORRIDOR\2 - DESIGN\DWGS\TCPS\C2202_TCP_GATEWAY.DWG
PLOT DATE: Friday, February 27, 2026 11:58:03 AM

LEGEND

- EXISTING SIGN
- CLASS A SIGN
- CLASS B SIGN
- TRAFFIC SAFETY DRUM
- WORK ZONE
- TYPE 3 BARRICADE
- SIGNALIZED INTERSECTION
- UNIFORMED POLICE OFFICER (UPO)

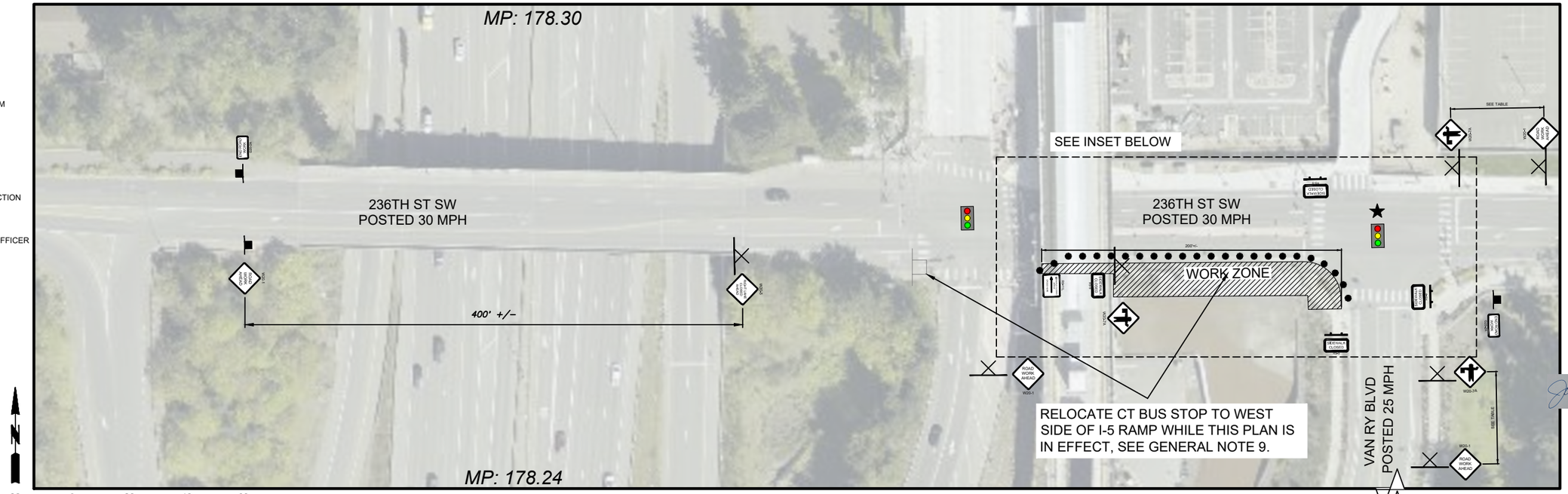

N

20 0 20 40 60
SCALE IN FEET

WORK ZONE CHANNELIZATION DEVICES AND SIGNS

GENERAL NOTES:

1. TRAFFIC CONTROL PLAN APPROVED FOR USE 24 HRS/7 DAYS PER WEEK.
2. CONTRACTOR TO FIELD VERIFY AND ADJUST SIGNAGE AS NECESSARY. SIGN AND CHANNELIZATION SPACING, TAPER LENGTHS, BUFFER SPACE, AND ALL OTHER TRAFFIC CONTROL PARAMETERS SHALL FOLLOW THE CURRENT EDITION OF THE MANUAL OF UNIFORM TRAFFIC CONTROL DEVICES (MUTCD). ADDITIONAL SIGNAGE MAY BE REQUIRED AS DIRECTED BY THE ENGINEER.
3. REVISIONS TO TRAFFIC CONTROL PLANS TO BE USED DURING CONSTRUCTION SHALL BE SUBMITTED 10 WORKING DAYS PRIOR TO USE.
4. SEE SPECIAL PROVISIONS FOR NOTIFICATION REQUIREMENTS FOR OTHER AFFECTED AGENCIES.
5. FOR NIGHTTIME WORK ALL TRAFFIC CONTROL DEVICES SHALL FOLLOW MUTCD REQUIREMENTS FOR NIGHTTIME USE.
6. CONTRACTOR SHALL MAINTAIN 11 FT WIDE TRAVEL LANES AT ALL TIMES FOR ALL LANES OPEN TO TRAFFIC.
7. ALL SHALL BE BLACK ON ORANGE UNLESS OTHERWISE SPECIFIED.
8. ALL W- AND R-SERIES SIGN SIZES AS NOTED.
9. CONTACT COMMUNITY TRANSIT FACILITIES PLANNER SHAWN NAKANO, (425) 521.5329 FIVE (5) DAYS PRIOR TO CLOSING OR RELOCATING CT BUS STOPS.

OWNER: CITY OF MOUNTLAKE TERRACE
CONTACT: DONNELLE DAYAO, PROJECT MANAGER
DDAYAO@MLTWA.GOV
425.582.3832

TRAFFIC CONTROL SUPERVISOR (ASSIGNED BY CONTRACTOR AFTER AWARD):

NAME: _____

TEL: _____

EMAIL: _____

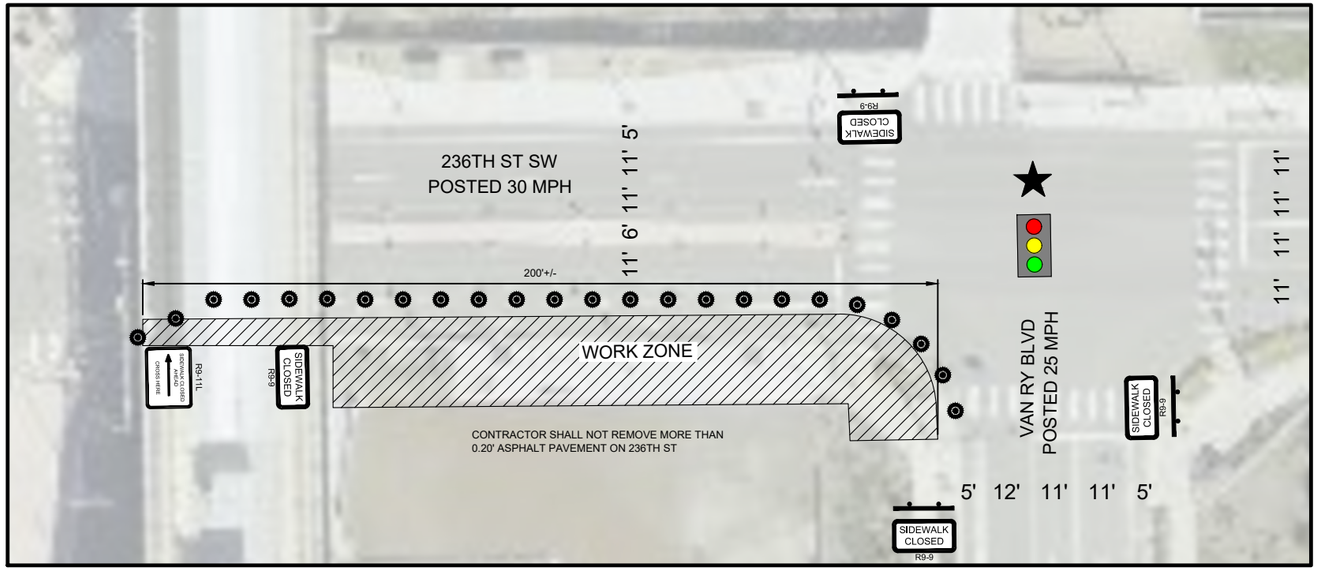

N

10 0 10 20 30
SCALE IN FEET

WORK ZONE AND PEDESTRIAN SIGNS

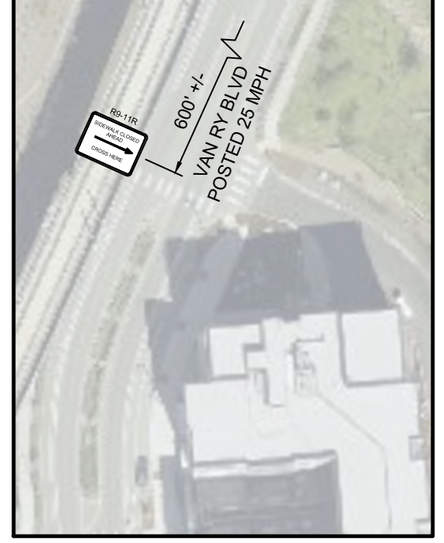

PED DETOUR, VAN RY BLVD SOUTH

MINIMUM TAPER LENGTH (L) IN FT					
LANE WIDTH, FEET	POSTED SPEED (MPH)				
	25	30	35	40	45
10	105	150	205	265	450
11	115	165	225	295	495
12	125	180	245	320	540

CHANNELIZATION DEVICE SPACING (FT)		
MPH	TAPER	TANGENT
50/70	40	80
35/45	30	60
25/30	20	40

SIGN SPACING = X		
RURAL ROADS	45/55 MPH	500 FT +/-
URBAN ARTERIALS	35/40 MPH	350 FT +/-
URBAN STREETS RESIDENTIAL & BUSINESS DISTRICTS	25/30 MPH	200 FT +/-

ROAD WORK AHEAD
W20-1
36" X 36"

W20-7A
36" X 36"

END ROAD WORK
G20-2
24" X 12"

SIDEWALK CLOSED
R9-9
24" X 12"

SIDEWALK CLOSED AHEAD
CROSS HERE
R9-11L
24" X 18"

SIDEWALK CLOSED AHEAD
CROSS HERE
R9-11R
24" X 18"

WSDOT APPROVAL STAMP
2" x 2"

TCP PREPARED BY:
JEFF RIVERS, Jrivers@mltwa.gov
425.758.5970

CITY OF MOUNTLAKE TERRACE
ENGINEERING SERVICES DEPARTMENT
23204 58TH AVE W
MOUNTLAKE TERRACE, WA 98043
(425) 775-1551
FAX (425) 775-0420

JOHN C. MAREK
STATE OF WASHINGTON
43563
REGISTERED PROFESSIONAL ENGINEER

CITY OF MOUNTLAKE TERRACE
TRANSIT CONNECTION CORRIDOR PROJECT
TRAFFIC CONTROL PLAN

APPROVED BY: DATE:
PROJECT ENGINEER: DATE:
- -

REVISION	DESCRIPTION	DATE
-	-	-
-	-	-
-	-	-

DRAWN BY: J. RIVERS
CHECKED BY: J. MAREK
DRAWING NO.: TC02
HORIZONTAL SCALE: - - -
VERTICAL SCALE: - - -

K:\ENGINEER\CONSTRUCTION PROJECTS\2022\C2202-TRANSIT CONNECTION CORRIDOR\2 - DESIGN\(MRCS)TCPS\C2202_TCP_GATEWAY.DWG
PLOT DATE: Friday, February 17, 2023 11:58:05 AM

APPENDIX I - Potential Staging Area

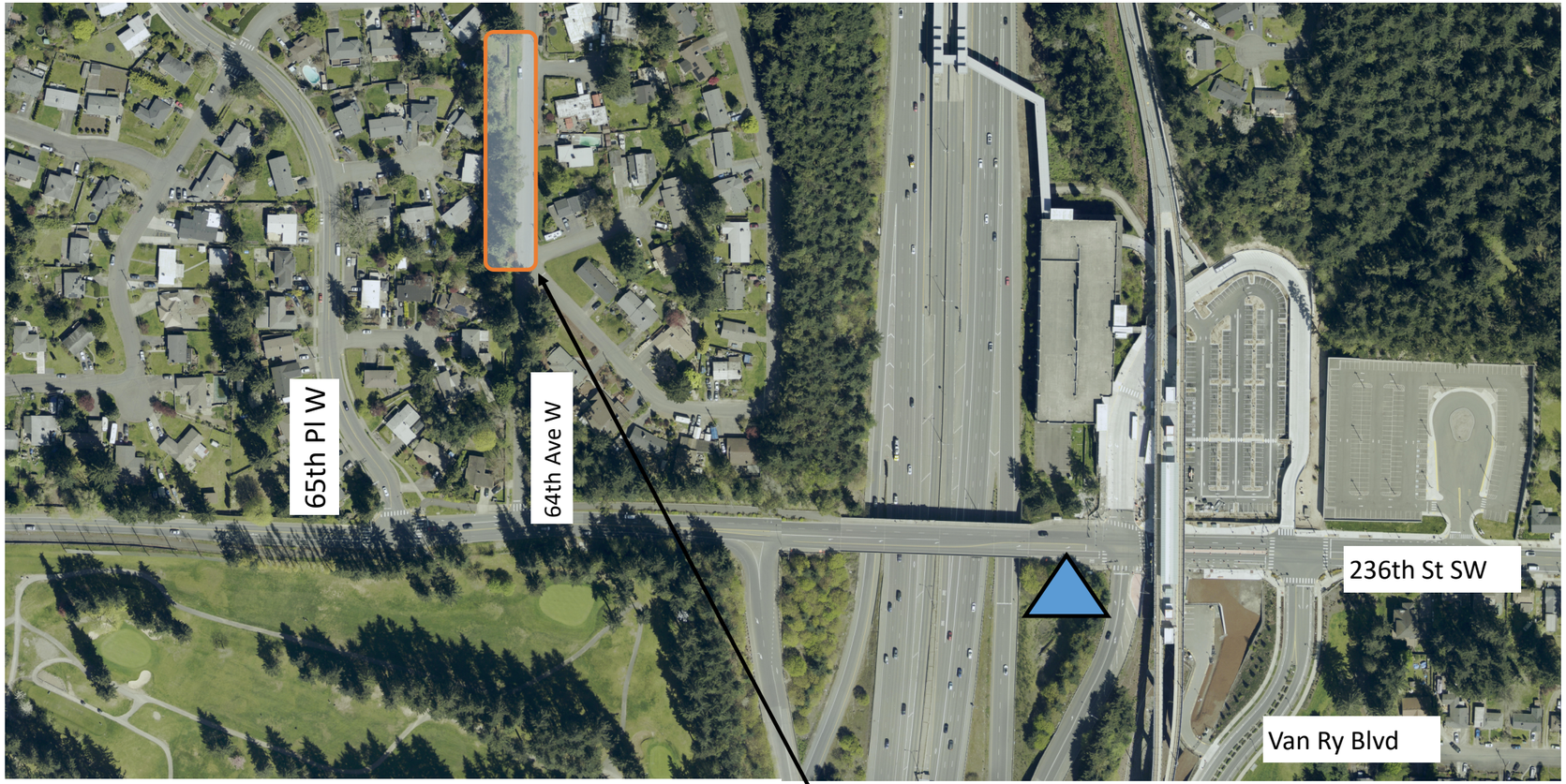

North

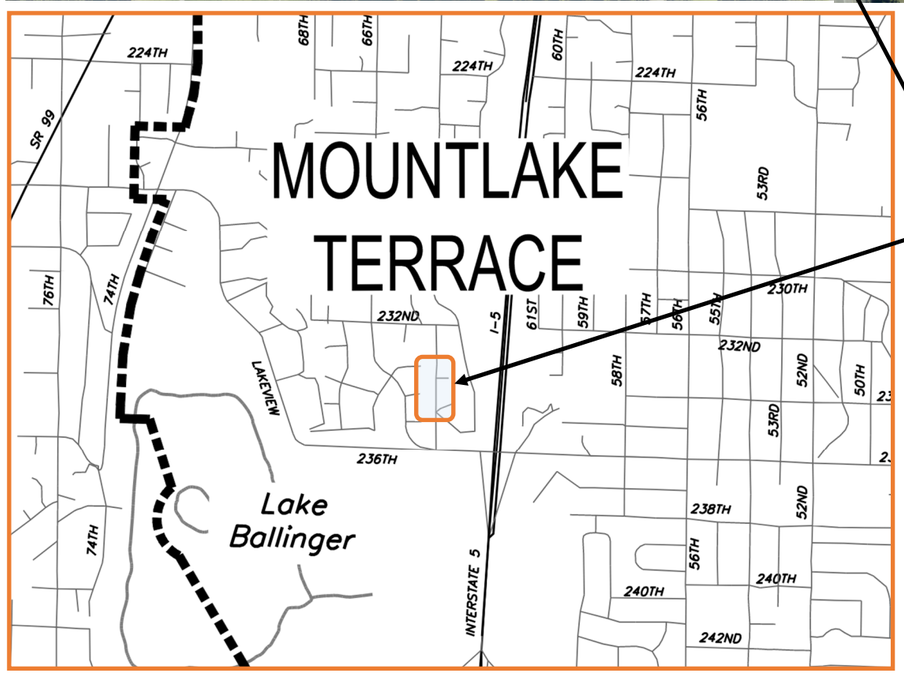

Pedestrian Plaza

Potential Construction Staging Area

West side of 64th Ave W

23300 block to 23200 block

Pedestrian Plaza construction site

CITY OF
MOUNTLAKE
TERRACE

CITY OF MOUNTLAKE TERRACE

Review Bid Award Pedestrian Plaza

City Council Work Session: May 28, 2026

Jeff Betz, Recreation and Parks Director, Parks

PURPOSE

- Review Bid Award for Transit Connection Corridor Project for Phase 2 Pedestrian Plaza.

- Review Professional Services Agreement with Consor for Construction Management Services.

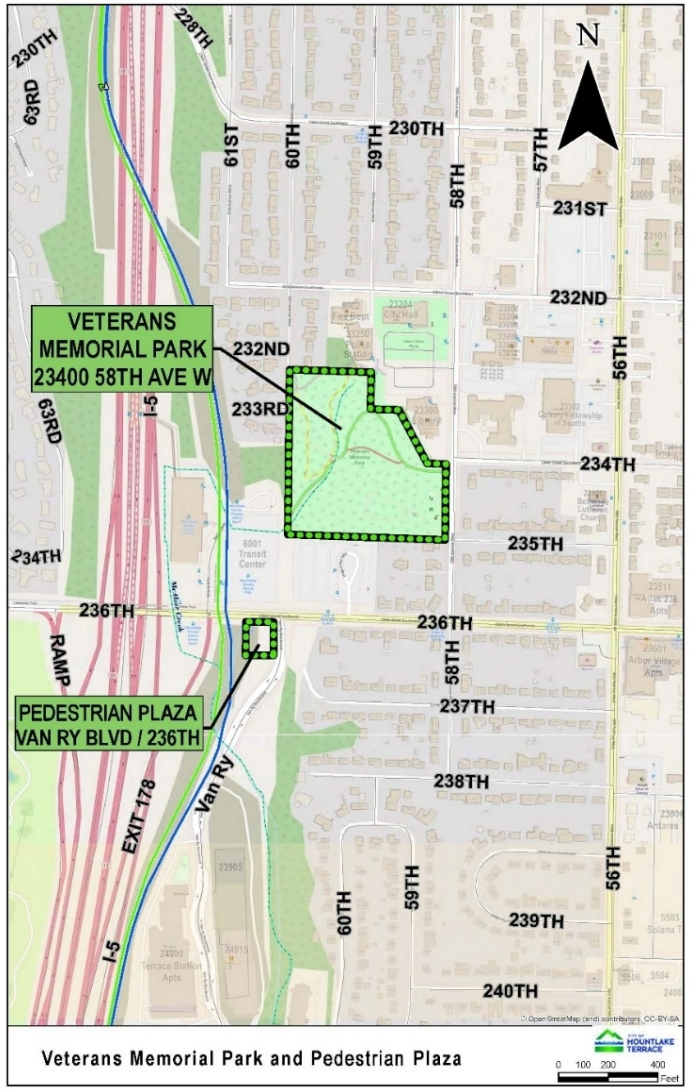

CITY OF MOUNTLAKE TERRACE

AGENDA

- Council Goals
- Legislative History
- Background
- Scope of work
- Timeline
- Finance & Budget
- Staff Recommendation
- Questions and Discussion

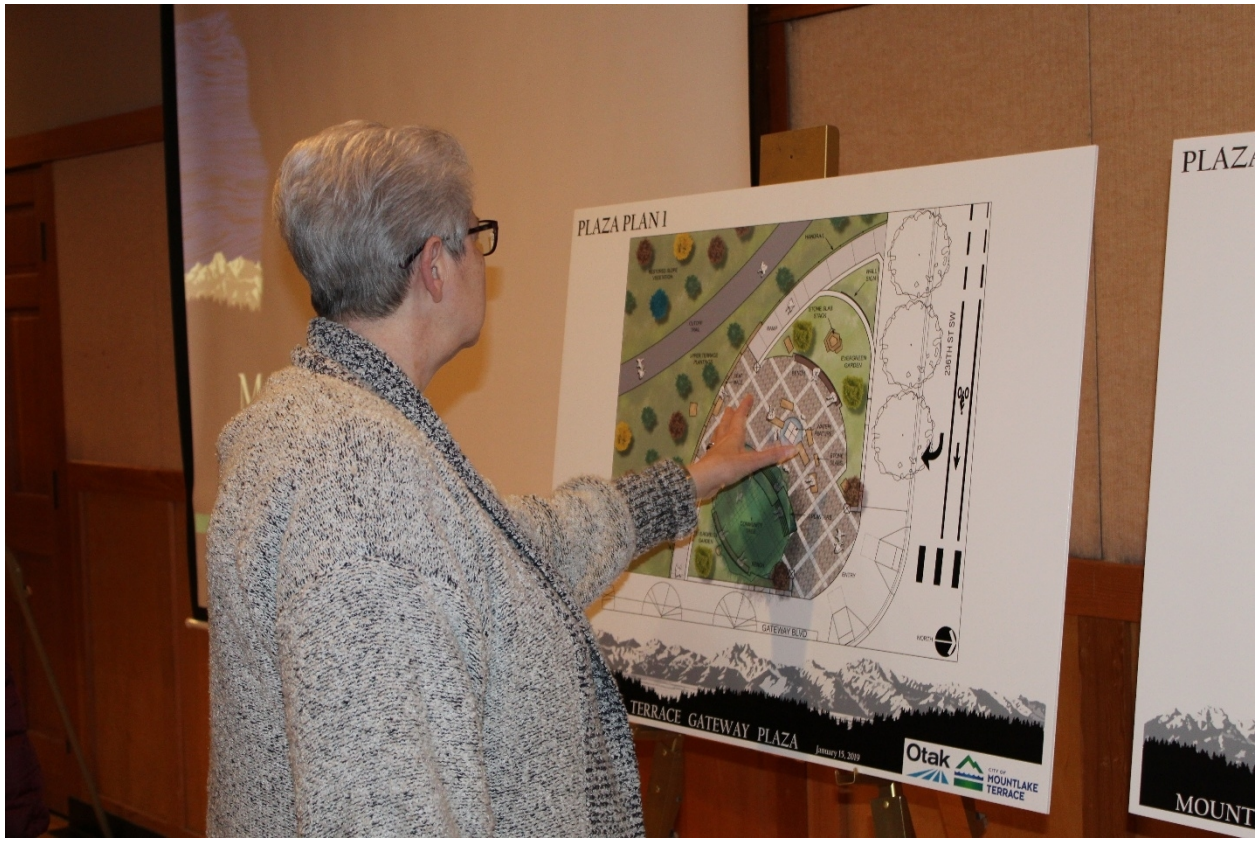

CITY OF MOUNTLAKE TERRACE

COUNCIL GOALS

- Growing a vibrant community
- Responsible governance to ensure desired level of service
- An informed and engaged community

CITY OF MOUNTLAKE TERRACE

LEGISLATIVE HISTORY

- December 2018 - Community/Open House #1
- January 2019 - Community/Open House #2
- July 2022 – Design Contract for Transit Connection Corridor Project (Council)
- November 2022 - Public Engagement Meeting/Design update
- February 2023 - Public Engagement Meeting/Design update
- May 2023 - Project Update & Design Amendment (Council)
- May 2024 - Resolution accepting grant funds (Council)
- November 2024 - Right of Way Acquisition for Pedestrian Plaza (Council)
- Monthly updates provided to RPAC

CITY OF MOUNTLAKE TERRACE

BACKGROUND

Transit Connection Corridor Project

- Pedestrian Connectivity
- Access – Public Transit
- Sound Transit: Lynnwood Link Light Rail Station
- Phased approach

CITY OF MOUNTLAKE TERRACE

SCOPE OF WORK

Pedestrian Plaza Construction

- Location: SW Corner of VanRy Blvd. and 236th ST SW
- Landscape
- Hardscape
- Retaining walls
- Art

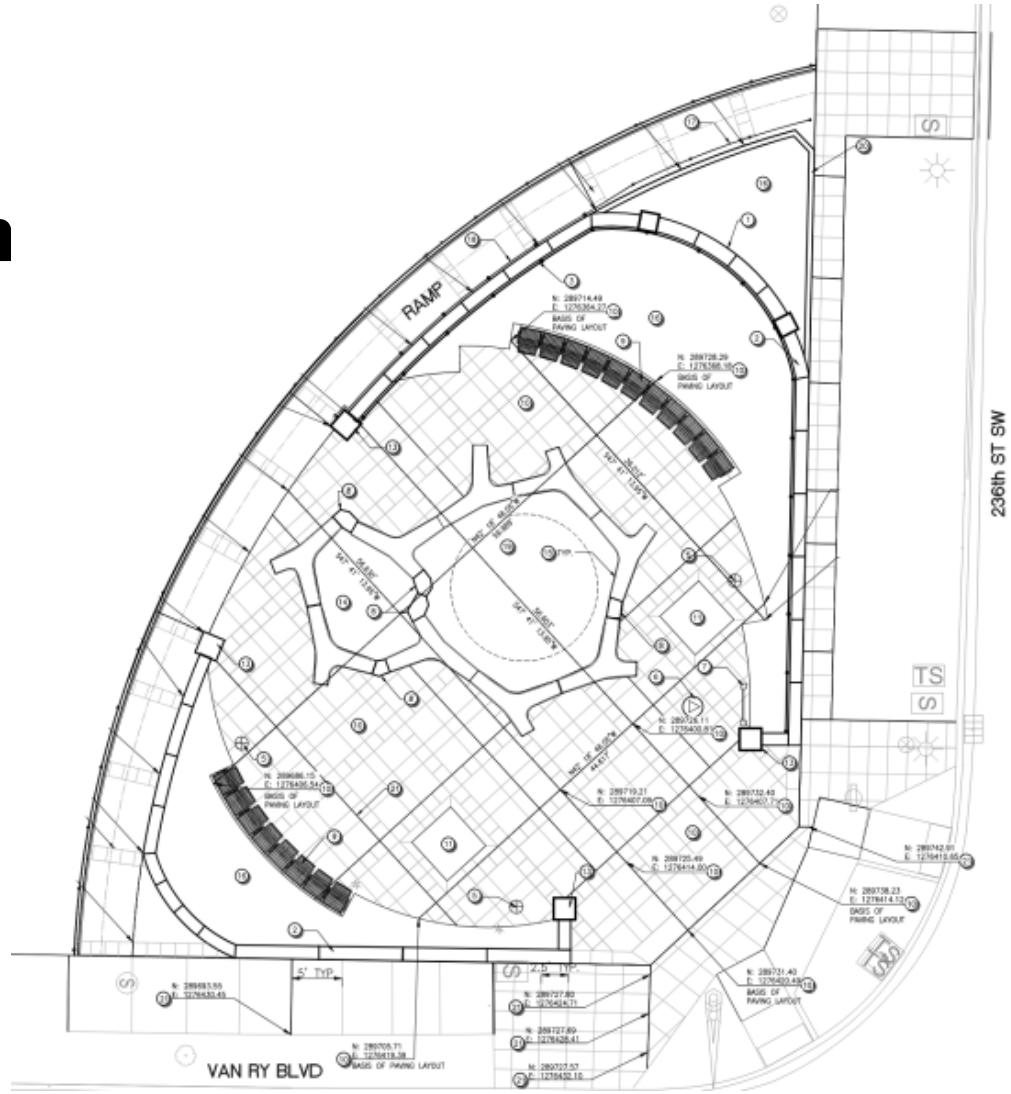

CITY OF MOUNTLAKE TERRACE

SCOPE OF WORK

Design Elements

- Seating – Twig Benches
- Pavement
- Trees and Shrubs
- Art
  - Mountlake Terrace Sign
  - Rise Together – Miguel Edwards

CURVED BENCH

TWIG BENCH

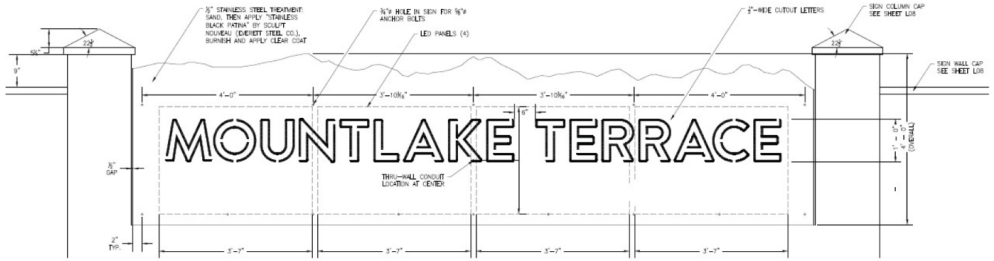

METAL FABRICATED SIGN

CITY OF MOUNTLAKE TERRACE

ESTIMATED TIMELINE

Construction

Task	Milestone
Call for Bids	March/April 2026
Council Award	June 2026
Final Permitting	July/Aug 2026
Construction	Aug 2026

CITY OF MOUNTLAKE TERRACE

FINANCE & BUDGET

Transit Connection Corridor - Pedestrian Plaza

Expenditures	Amount
CM Services + Staff Time	$403,000
Art	$52,000*
Construction	$1,927,118.83
Contingency (10%)	$192,711.88

*$48,000 already paid to artist

Total Construction: $2,575,000

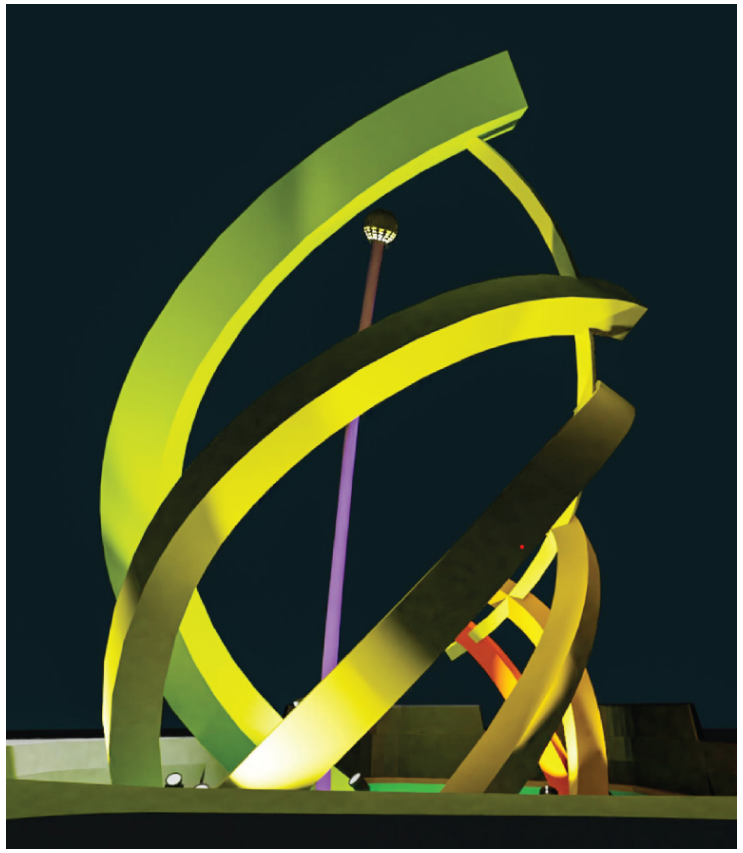

Rise Together: Miguel Edwards

CITY OF MOUNTLAKE TERRACE

FINANCE & BUDGET

Revenues	
Grant Funding (ST, DEMO)	$ 2,366,000
Parks CIP Fund	$209,000

Total Project Budget: $2,575,000

STAFF RECOMMENDATION

Staff recommends City Council authorize the City Manager to execute the Local Agency Construction Contract (CDS 0815(007)) with Always Active Services LLC in a form reviewed and approved by legal council, in an amount of $1,927,118.83, with an approved budget not to exceed $2,120,000.00 for construction of the Transit Connection Corridor Project. This can be accomplished by adding it to the June 4, 2026 Consent Agenda.

CITY OF MOUNTLAKE TERRACE

STAFF RECOMMENDATION

Staff recommends City Council authorize the City Manager to execute the Professional Services Agreement with Consor, in a form reviewed and approved by legal council, I an amount of $290,353, with an approved budget not to exceed $320,000. This can be accomplished by adding it to the June 4, 2026 Consent Agenda.

CITY OF MOUNTLAKE TERRACE

DISCUSSION & QUESTIONS

CITY OF MOUNTLAKE TERRACE

Thank you

CITY OF MOUNTLAKE TERRACE

CITY OF MOUNTLAKE TERRACE

STAFF REPORT

To: Mountlake Terrace City Council
From: Jeff Betz, Parks and Recreation Director
Meeting Date: May 28, 2026
Subject: Review Consor Construction Management Agreement for Pedestrian Plaza (Transit Connection Corridor) Project

Required Reviews:

Jennifer Joki	Created/Initiated - 05/20/2026
Jeff Betz	Approved - 05/20/2026
Sirke Salminen	Approved - 05/22/2026
Hillary Evans	Approved - 05/22/2026
Carolyn Hope	Final Approval - 05/22/2026

Council Goal(s):
Growing a vibrant community
Responsible governance to ensure desired level of service

Legislative History:
N/A.

Subject Summary:
The city initiated planning for local pedestrian improvements to increase access to public transit over a decade ago, when development of the Sound Transit Light Rail Station was confirmed. While the Mountlake Terrace Transit Center was redeveloping, the city was working with consultants to design pathways and a plaza that would compliment and support public transit services. With the completion of the Sound Transit Lynnwood Link Light Rail Station, the city is ready to move forward with development of the Transit Connection Corridor (TCC) - Pedestrian Plaza construction project.

As a part of an objective to improve pedestrian connectivity, the city designed a 4,300 square-foot pedestrian plaza to be constructed in the south-west corner of 236th Street Southwest and VanRy Boulevard. Primary elements of the plaza include pedestrian seating, decorative paving, landscaped areas and art features.

The TCC - Pedestrian Plaza project is federally funded, requiring strict adherence to funding guidelines, requirements and documentation. This level of tracking, documentation and

observation exceeds city staff capacity with existing workloads. As such, external consultant resources were solicited to fulfill construction management and administration services.

In October 2025, the city published a Request for Qualifications (RFQ) for Construction Management services to support city staff with administration of the federally funded Transit Connection Corridor construction project. The city received two submittals in response to the advertisement. After the evaluation committee completed their review, Consor was determined to be qualified and was selected to move forward into scope development and negotiations.

A scope and fee was developed to provide construction management, coordination, administration, inspection and testing services. The maximum amount payable for consultant services is $290,353.00. The contract will be financed with local funds. A 10% contingency is requested to support any additional unforeseen efforts.

Financial/Budget Impacts:

Budget Amendment Required? No. _____

Budget and Sources: Grant -Sound Transit	$320,000
Expenditure:	$320,000
New Appropriation Required + Sources:	

Additional Financial Information:

N/A.

Community Notifications:

City Council Agenda

If "Other," please specify:

Board/Commission Recommendation:

N/A.

Staff Recommendation:

Staff Recommends the City Council authorize the City Manager to execute the Professional Services Agreement for Construction Management services with Consor, in a form reviewed and approved by legal council, in an amount of $290,353.00, with an approved budget not to exceed $320,000. This can be accomplished by adding it to the June 4, 2026 Consent Agenda.

Council Motion:

N/A

Attachments:

1. Consor PSA Pedestrian Plaza (Transit Connection Corridor) Project (Draft)

PROFESSIONAL SERVICES AGREEMENT

This Agreement ("Agreement") is dated effective this ____ day of _June__, 2026. This Agreement is by and between the City of Mountlake Terrace, a Washington municipal corporation ("City"), and ___Consor North America, Inc.___ ("Contractor"), collectively known as the parties ("Parties").

A. The City seeks the professional services of a skilled independent contractor capable of working without direct supervision in the capacity of construction administration, management and inspection services to support construction of the Transit Connection Corridor- Pedestrian Plaza project_ and is familiar with the City's municipal code, resolutions, regulations, and policies.

B. The Contractor, by entering into the Agreement, represents that it has the requisite skills and experience necessary to perform and provide such services in a competent and professional manner.

NOW, THEREFORE, in consideration of the mutual promises set forth herein, the Parties agree to the following terms and conditions:

1. Services.

1.1 Services. Contractor shall provide the services and equipment as specified pursuant to the terms more specifically described in "Exhibit A – Scope of Services," attached hereto and incorporated by this reference ("Services"), in a manner consistent with the accepted practices and standards for other similar services, performed to the City's satisfaction, within the time-period prescribed by the City and pursuant to the direction of the City Manager or his or her designee.

1.2 Compliance with Laws. Contractor shall comply with and perform the Services in accordance with all applicable federal, state, and City laws, including, but not limited to, the City of Mountlake Terrace's Municipal Code, and all other City resolutions, standards or policies, as now existing or hereafter adopted or amended.

1.3 Performance Standard. In the performance of services under this Agreement, Contractor and its employees or designees, promise to exercise the degree of skill and care required by customary and generally accepted practices, standards, and procedures adopted by Contractors' rendering the same or similar type of service at the same time in the same region. All duties shall be performed in the manner consistent with those customary and generally accepted practices, and the Contractor shall be responsible for the professional and technical soundness and accuracy of all work and services furnished pursuant to this Agreement.

2. Term. The term of this Agreement shall commence upon the effective date of this Agreement and shall expire on _December 31, 2026.

3. Termination. Prior to the expiration of the Term, this Agreement may be terminated immediately, with or without cause by the City upon prior written notice to the

Contractor. If the Agreement is terminated after partial performance, the City will be obligated to pay only for that portion of the total work authorized under this Agreement that is satisfactorily completed. The Contractor may terminate this Agreement only upon sixty (60) days prior written notice to the City.

4. Compensation.

4.1 Total Compensation. In consideration of the Contractor performing the Services, the City agrees to pay the Contractor in an amount not to exceed a maximum sum of $_290,353.00_ according to a rate or method as delineated in Exhibit A.

4.2 Method of Payment. City will be billed no more often than monthly. Invoices shall contain an itemized breakdown of the services performed on a project basis during the time covered by the invoice. City will pay Contractor by warrant or check within thirty (30) days of the receipt of an invoice. A finance charge of one percent (1%) per month [twelve percent (12%) per annum] will accrue on any unpaid balance outstanding for more than forty-five (45) days.

4.3 Contractor Responsible for Taxes. The Contractor shall be solely responsible for the payment of any taxes imposed by any lawful jurisdiction as a result of the performance and payment of this Agreement.

4.4 Reimbursement of Expenses. The City of Mountlake Terrace is not liable to Contractor for any expenses paid or incurred by Contractor unless otherwise agreed in writing.

5. Contractor to Direct Work. Contractor shall control and direct the performance of the work or project of Contractor pursuant to this Agreement, subject to the City of Mountlake Terrace oversight. The City of Mountlake Terrace reserves the right to inspect, review, and approve of the work or project of Contractor to assure that it has been completed as specified, before payment.

6. Warranty. The Contractor warrants that it has the requisite training, skill, and experience necessary to provide the Services and is appropriately accredited and licensed by all applicable agencies and governmental entities, including but not limited to being registered to do business in the City of Mountlake Terrace by obtaining a City of Mountlake Terrace business registration if required by municipal code.

7. Security and Damages. The Contractor shall be responsible for security of its equipment and assumes all risk of damage, theft or loss to Contractor's equipment and supplies occurring from any nature whatsoever. Additionally, Contractor shall be responsible for any maintenance costs and repair costs resulting from any damage or loss from any source whatsoever to its equipment or supplies. Contractor agrees that neither damage to or loss of its equipment shall be applied to or claimed against City property, City liability insurance or commission revenues owed to the City.

8. Independent Contractor/Conflict of Interest.

8.1 Independent Contractor. It is the intention and understanding of the Parties that the Contractor shall be an independent contractor and that the City shall neither be liable for nor obligated to pay sick leave, vacation pay or any other benefit of employment, nor to pay any social security or other tax, which may arise as an incident of employment. The Contractor shall pay all income and other taxes as due. Industrial or any other insurance, which is purchased for the benefit of the Contractor, shall not be deemed to convert this Agreement to an employment contract.

8.2 City's Right of Supervision and Inspection. Even though Contractor is an independent Contractor with the authority to control and direct the performance and details of the work authorized under this Agreement, the work must meet the approval of the City and shall be subject to the City's general right of inspection and supervision to secure the satisfactory completion thereof.

8.3 Work Performed at Contractor's Risk. Contractor shall take all precautions reasonably necessary and shall be responsible for the safety of its employees, agents and subcontractors in the performance of the work hereunder and shall utilize all protections reasonably necessary for that purpose. All work shall be done at Contractor's own risk, and Contractor shall be responsible for any loss or damage to materials, tools, or other articles used or held for use in connection with the work.

8.4 Conflict of Interest. The Contractor may or will be performing professional services during the term for other parties and that the City is not the exclusive user of services the Contractor will provide, provided, however, that such performance of other services shall not conflict with or interfere with Contractor's ability to perform the Services. Contractor agrees to resolve any such conflicts of interest in favor of the City.

9. Indemnification.

9.1 Contractor Indemnification. Contractor shall defend, indemnify and hold the City, its officers, officials, employees and volunteers harmless from third-party death, bodily injury, and damage to property claims, injuries, damages, losses or suits including attorney fees, arising out of or resulting from the acts, errors or omissions of the Contractor (or its employees, agents, representatives, subcontractors/ subconsultants) in performance of this Agreement, whether such claims sound in contract, tort, or other legal theory, except for injuries and damages caused by the sole negligence of the City. The Contractor's duty to defend and indemnify pursuant to this Section is not in any way limited to, or by the extent of, insurance obtained by, obtainable by, or required of the Contractor. Should a court of competent jurisdiction determine that this Agreement is subject to RCW 4.24.115, then in the event of liability for damages arising out of bodily injury to persons or damages to property caused by or resulting from the concurrent negligence of the Contractor and the City, its officers, officials, employees, and volunteers, the Contractor's liability, including the duty and cost to defend, hereunder shall be only to the extent of the Contractor's negligence. It is further specifically and expressly understood that the indemnification provided herein constitutes the Contractor's waiver of immunity under Industrial Insurance, Title 51 RCW, solely for the purposes of indemnification. This waiver has been mutually negotiated by the Parties. If,

and to the extent, Contractor employs or engages subcontractors or subconsultants then Contractor shall ensure that each such subcontractor and subconsultant (and subsequent tiers of subcontractors and subconsultants) shall expressly agree to defend and indemnify the City to the extent and on the same terms and conditions as the Contractor pursuant to this Section 9. The provisions of this section shall survive the expiration or termination of this Agreement.

9.2 Records Request. When the City provides the Contractor with notice of a Public Records Request, Contractor agrees to save, hold harmless, indemnify and defend the City, its officers, agents, employees and elected officials from and against claims, lawsuits, fees, penalties and costs resulting from the Contractor's violation of the Public Records Act RCW 42.56, or Contractor's failure to produce public records as required under the Public Records Act. Records shall be retained until all litigation, claims or audit findings have been resolved even though such litigation, claim or audit continues past any formal retention period imposed by Washington State Archives, grant or other applicable law or regulation.

9.3 Survival. The provisions of this Section shall survive the expiration or termination of this Agreement with respect to any event occurring prior to such expiration or termination.

10. Discrimination Prohibited and Compliance with Equal Opportunity Legislation. In all Contractor services, programs or activities, and all Contractor hiring and employment made possible by or resulting from this Agreement, there shall be no discrimination by the Contractor or by Contractor's employees, agents, subcontractors or representatives against any person because of sex, age, (except minimum age and retirement provisions), race, color, creed, national origin, marital status, religion, sexual orientation or the presence of any disability, including sensory, mental, or physical handicaps, based upon a bona fide occupational qualification in relationship to hiring and employment. This requirement shall apply, but not be limited to the following: employment, advertising, layoff or termination, rates of pay or other forms of compensation, and selection for training, including apprenticeship. The Contractor shall not violate any of the terms of Chapter 49.60 RCW, Title VII of the Civil Rights Act of 1964, the Americans with Disabilities Act, Section 504 of the Rehabilitation Act of 1973 or any other applicable federal, state or local law or regulation regarding non-discrimination. Any material violation of this provision shall be grounds for termination of this Agreement by the City and, in the case of the Contractor's breach, may result in ineligibility for further City agreements.

11. Confidentiality.

All information regarding the City obtained by the Contractor in performance of this Agreement shall be considered confidential. The Contractor shall safeguard all written information submitted by the City to the Contractor in connection with the services performed by the Contractor under this Agreement to at least the same extent as the Contractor safeguards like information relating to its own business or profession. Breach of confidentiality by the Contractor will be grounds for immediate termination.

12. Work Product and Ownership of Records and Documents.

All originals and copies of work product, including records, files, documents, reports, plans, sketches, layouts, designs, design specifications, computer disks, magnetic media or material which may be produced or modified by the Contractor while performing the services shall belong to the City. At the termination or cancellation of this Agreement, all copies of any such work product remaining in the possession of the Contractor shall be delivered to the City and shall become the property of the City. Files containing the written record of the Contractor's services shall be delivered to the City. Any unauthorized reuse of work product outside of its intended use by City shall be without liability to Contractor.

13. Insurance.

13.1 Insurance Term. The Contractor shall procure and maintain for the duration of the Agreement, insurance against claims for injuries to persons or damage to property which may arise from or in connection with the performance of work hereunder by the Contractor, its agents, representatives, or employees. Contractor shall comply with the following conditions and procure and keep in force during the term of this Agreement, at Contractor's own cost and expense, the following policies of insurance with companies authorized to do business in the State of Washington, which are rated at least "A" or better and with a numerical rating of no less than seven (7), by A.M. Best Company and which are acceptable by the City. Contractor's maintenance of insurance as required by the Agreement shall not be construed to limit the liability of the Contractor to the coverage provided by such insurance, or otherwise limit the City's recourse to any remedy available at law or in equity.

13.2 Minimum Scope of Insurance. Contractor shall obtain insurance of the types described below:

a. Automobile Liability insurance covering all owned, non-owned, hired and leased vehicles. Coverage shall be written on Insurance Services Office (ISO) form CA 00 01 or a substitute form providing equivalent liability coverage.

b. Commercial General Liability insurance shall be written at least as broad on ISO occurrence form CG 00 01 and shall cover liability arising from premises, operations, stop-gap, independent contractors and personal injury and advertising injury. The City shall be named as an additional insured under the Contractor's Commercial General Liability insurance policy with respect to the work performed for the City using an additional insured endorsement at least as broad as ISO CG 20 26.

c. Workers' Compensation coverage as required by the Industrial Insurance laws of the State of Washington.

d. Professional Errors and Omissions Insurance. If both parties agree that the Services do not warrant Contractor providing Professional Errors and Omissions Insurance, Section 13.3.d. may be stricken if this section is initialed by both Parties: _____ _____

13.3 Minimum Insurance Limits. Contractor shall maintain the following insurance limits:

a. Commercial General Liability. $2,000,000 combined single limit per occurrence for bodily injury personal injury and property damage; $2,000,000 general aggregate.

b. Automobile Liability. $1,000,000 combined single limit per accident for bodily injury and property damage.

c. Workers' Compensation. Workers' compensation limits as required by the Workers' Compensation Act of Washington.

d. Professional Liability/Contractor's Errors and Omissions Liability. Insurance shall be written with limits no less than $2,000,000 per claim and $2,000,000 policy aggregate limit.

13.4 Notice of Cancellation. In the event that the Contractor receives notice (written, electronic or otherwise) that any of the above required insurance coverage is being cancelled and/or terminated, the Contractor shall immediately (within forty-eight (48) hours) provide written notification of such cancellation/ termination to the City.

13.5 Verification of Coverage. In signing this Agreement, the Contractor is acknowledging and representing that required insurance is active and current. Contractor shall furnish the City with original certificates and a copy of the amendatory endorsements, including but not necessarily limited to the additional insured endorsement, evidencing the insurance requirements of the Agreement before commencement of the work.

13.6 Insurance Shall be Primary - Other Insurance Provision. The Contractor's insurance coverage shall be primary insurance as respect to the City. The Contractor's Automobile Liability and Commercial General Liability insurance policies are to contain, or be endorsed to contain that they shall be primary insurance as respect to the City. Any Insurance, self-insurance, or self-insurance pool coverage maintained by the City shall be excess of the Contractor's insurance and shall not contribute with it.

13.7 Claims-made Basis. Unless approved by the City all insurance policies shall be written on an "Occurrence" policy as opposed to a "Claims-made" policy.

13.8 Failure to Maintain Insurance. Failure on the part of the Contractor to maintain the insurance as required shall constitute a material breach of contract, upon which the City may, after giving five business days' notice to the Contractor to correct the breach, immediately terminate the contract or, at its discretion, procure or renew such insurance and pay any and all premiums in connection therewith, with any sums so expended to be repaid to the City on demand, or at the sole discretion of the City, offset against funds due the Contractor from the City.

13.9 Full Availability of Contractor Limits. If the Contractor maintains higher insurance limits than the minimums shown above, the City shall be insured for the full available limits of Commercial General and Excess or Umbrella liability maintained by the Contractor, irrespective of whether such limits maintained by the Contractor are greater than those required by this contract

or whether any certificate of insurance furnished to the City evidences limits of liability lower than those maintained by the Contractor. A combination of Primary and Excess or an Umbrella policy may be used to meet required minimums.

14. Maintenance/Inspection of Records.

14.1 Maintenance and Inspection. The Contractor agrees to maintain books, records, and documents which sufficiently and properly reflect all direct and indirect costs and expenses allowable under this Agreement related to the performance of the Services and maintain such accounting procedures and practices as may be deemed necessary by the City to assure proper accounting of all funds paid pursuant to this Agreement. These records shall be subject, at all reasonable times, to inspection, review or audit by the City, its authorized representative, the State Auditor, or other governmental officials authorized by law to monitor this Agreement. If any litigation, claim or audit is commenced, the contractor shall cooperate with the City and assist in the production of all such documents.

14.2 Public Records. The Parties agree that this Agreement and records related to the performance of the Agreement are, with limited exception, public records subject to disclosure under the Public Records Act RCW 42.56. Contractor acknowledges that any record, document, work product or correspondence created by contractor may be subject to the Public Records Act.

Further, in the event of a Public Records Request to the City, the City may provide the Contractor with a copy of the Records Request and the Contractor shall provide copies of any City records in Contractor's possession, necessary to fulfill that Public Records Request. If the Public Records Request is large the Contractor will provide the City with an estimate of reasonable time needed to fulfill the records request.

15. Dispute Resolution.

15.1 Informal Resolution. In the event of a dispute, a party shall notify the other party of the dispute with as much detail as possible. The City and Contractor shall use good faith efforts to resolve the dispute within ten (10) business days. If the Parties' business representatives are unable to resolve the dispute, or agree upon the appropriate corrective action to be taken, within such ten (10) business days, then either party may initiate mediation. Both Parties will continue without delay to carry out all their respective responsibilities under this Agreement. The Parties shall share the mediator's fee and any filing fees equally. The mediation shall be held in the place where the mediator is located, unless another location is mutually agreed upon. Agreements reached in mediation shall be enforceable as settlement agreements in any court having jurisdiction thereof.

15.2 Injunctive Relief. Nothing contained in this Section shall limit or delay the right of either party to seek injunctive relief from a court of competent jurisdiction, whether or not such party has pursued informal resolution in accordance with this Section.

16. Compliance with Grant Terms and Conditions. Contractor shall comply with any and all conditions, terms and requirements of any federal, state or other grant that wholly or partially funds Contractor's work hereunder.

17. General Provisions.

17.1 Entire Agreement. This Agreement contains all of the agreements of the Parties with respect to any matter covered or mentioned in this Agreement and no prior agreements shall be effective for any purpose. All attachments and addendum are incorporated herein by this reference, and shall be a part of this Agreement.

17.2 Modification. No provisions of this Agreement may be amended, modified or an additional obligation assumed by either Party except by written agreement signed by the Parties.

17.3 Full Force and Effect. Any section or provision of this Agreement which is adjudicated invalid or illegal shall in no way affect or invalidate any other section or provision hereof and such other sections or provisions shall remain in full force and effect.

17.4 Subletting/Assignment. Neither the Contractor nor the City shall have the right to sublet, transfer or assign, in whole or in part, any or all of its obligations and rights hereunder without the prior written consent of the other party.

17.5 Attorney Fees. In the event either party brings a lawsuit to enforce the terms of this Agreement, or arising from a breach of this Agreement, the prevailing party shall be entitled to its costs and attorneys' fees for bringing or defending against the action.

17.6 No Waiver. Failure or delay of the City to declare any breach or default immediately upon occurrence shall not waive such breach or default. Failure of the City to declare one breach or default does not act as a waiver of the City's right to declare another breach or default.

17.7 Governing Law and Venue. This Agreement shall be governed by, construed, and enforced in accordance with the laws of the State of Washington; venue shall be in Snohomish County.

17.8 Authority. Each individual executing this Agreement on behalf of the City and the Contractor represents and warrants that such individuals are duly authorized to execute and deliver this Agreement on behalf of the Contractor or the City.

17.9 Notices. Any notices required to be given by the Parties shall be delivered at the addresses set forth below. Any notices may be delivered personally or may be deposited in the United States mail, postage prepaid, to the address set forth below. Any notice so posted in the United States mail shall be deemed received three (3) days after the date of mailing.

17.10 No Third Party Beneficiary. It is the specific intent of the Parties, and all Parties agree, that this Agreement shall not confer third party beneficiary status on any non-party.

17.11 No Joint Venture. This Agreement does not create a partnership or joint venture, and in carrying out this Agreement, the Parties shall act in their individual capacities and not as agents, employees, or partners of one another.

17.12 Survivability. The obligation of Contractor under all provisions of this Agreement, which may reasonably be interpreted or construed as surviving the completion, termination, or cancellation of this Agreement shall survive the completion, termination, or cancellation of this Agreement.

17.13 Contractor Payments. In the event the Contractor fails to pay any taxes, assessments, penalties, or fees imposed by any governmental body, including a court of law, then the City shall have the right but not the obligation and the Contractor authorizes the City to deduct and withhold or pay over to the appropriate governmental body those unpaid amounts upon demand by the governmental body. It is agreed that this provision shall apply to taxes and fees imposed by City ordinance. Any such payments shall be deducted from the Contractor's total compensation.

Executed on the dates written below.

CONTRACTOR: CONSOR

By:

Mike Hagerty, District Manager

10900 NE 8th Street, Suite 1440
Bellevue, WA 98004

Date:

CITY OF MOUNTLAKE TERRACE

By:

Jeff Niten, City Manager

23204 58th Avenue W
Mountlake Terrace, WA 98043

Date:

Approved as to form:

Hillary J. Evans, City Attorney

EXHIBIT A

Scope of Services

EXHIBIT A: SCOPE OF WORK
TRANSIT CONNECTION CORRIDOR PROJECT
FEDERAL NO. CDS 0815(007)
CITY OF MOUNTLAKE TERRACE

Project Background

The City of Mountlake Terrace is initiating this federally funded which involves construction of a landscaped pedestrian plaza. Primary elements of construction include TESC, site excavation and grading, structural earth wall (incorporating both soil and light-weight (geofoam - backfill), storm drainage collection, reinforced concrete retaining walls, pedestrian seating, decorative (granite) wall caps, decorative concrete site paving and jointing, pedestrian railings, site lighting, signage, landscaping and irrigation. The City is contracting with Consor North America, Inc. (Consultant) to provide construction management and inspection services for the construction phase of the project.

Project Summary

Consultant will perform project management, contract administration, construction management, construction inspection, and testing and special inspection for the Transit Connection Corridor Project.

Project Assumptions

Construction is anticipated to commence in Spring of 2026 for project and have an active construction duration of 85 working days (approximately 17 weeks) has been assumed.

Scope of Services

Consultant is proposing to perform the following services in relation to the City's Transit Connection Corridor Project:

Task 1 - Project Management and Contract Administration

Objective

Provide overall leadership and team strategic guidance aligned with City staff objectives. Coordinate, monitor, and control the project resources to meet the technical, communication, and contractual obligations required for developing and implementing the project scope.

Subtask 1.1 Project Coordination

- Perform general administration and project management throughout the construction phase to ensure successful completion of all tasks and elements of the Project within the established scope, schedule, and budget.
- Proactively track progress of project work completed against schedule & budget.
- Inform the City of any anticipated challenges during the construction phase as they may arise and develop solutions together.

Subtask 1.2 Invoices/Status Reporting

- Prepare monthly invoices, including expenditures by task, hours worked by project personnel, and other direct expenses with the associated backup documentation to meet federal requirements.
- Monthly status reports to accompany each invoice and include comparisons of monthly expenditures and cumulative charges to budget by Task.

Subtask 1.2 Assumptions

- Assume Six (6) monthly invoices and status reports

Subtask 1.2 Deliverables

- Consultant will deliver to the City a monthly invoice and status report covering:
  - Work on the project performed during the previous month
  - Issues encountered, and actions taken for their resolution
  - Potential impacts to submittal dates, budget shortfalls, or optional services
  - Construction schedule updates
  - Issues requiring project team action

Task 2 – Construction Contract Administration and Closeout

Objective

Oversee construction phase activities as first point of contact for construction contractor. Coordinate with City staff and design team. Lead all project meetings and monitor project budget and schedule, quantities and quality of materials, and verify conformance with contract documents.

Subtask 2.1 Pre-Construction Meeting

Attend and lead the Pre-Construction Meeting with up to three (3) consultant team members in attendance. Prepare meeting agenda, run meeting, and issue meeting summary.

Subtask 2.1 Assumptions

- Three (3) consultant staff to attend Pre-Construction Meeting.

Subtask 2.1 Deliverables

- Meeting agenda and meeting minutes

Subtask 2.2 Project and Weekly Construction Meetings

Attend and lead project, weekly construction, and utility coordination meetings with up to one (1) consultant team members in attendance. Prepare meeting agenda, run meeting, and issue meeting summary.

Subtask 2.2 Assumptions

- Two (2) consultant staff to attend (Construction Manager). Construction Inspector attendance is covered in Task 3 and not included in this subtask. Assume eighteen (18) weekly meetings during active construction.

Subtask 2.2 Deliverables

- Meeting agenda and meeting minutes

Subtask 2.3 Contract Administration

Provide construction management and administration services to monitor that the project is completed according to the Contract Documents. Perform the following tasks.

1. Coordinate and communicate with City and construction contractor on a regular basis to discuss project issues and status.
2. Issue change orders, including independent cost justifications, and maintain a change order log.
3. Issue field work directives and non-conformance reports.
4. Assess contractor-submitted baseline schedule, schedule updates, and 3-week look ahead schedules for feasibility and conformance with the Contract.
5. Monitor overall project construction budget.

6. Maintain material quantity and quality documentation, including maintenance of the Record of Materials (ROM).

Subtask 2.3 Assumptions

- Assume Four (4) change orders taking ten (10) hours per change orders to coordinate with City, EOR and contractor and draft change orders.
- ROM

Subtask 2.3 Deliverables

- Change order documents for City review and approval.
- Field work directives and non-conformance reports
- Quality and quantity documentation
- Updated ROM

Subtask 2.4 Monthly Progress Estimates

Track quantities of materials installed monthly on pay note documents and draft progress estimates. Review estimates with the construction contractor prior to finalizing and submitting to the City for payment.

Subtask 2.4 Assumptions

- Five (5) monthly estimates are assumed during active construction and project closeout.

Subtask 2.4 Deliverables

- Quantity tracking spreadsheet
- Monthly progress estimates with recommendation to pay

Subtask 2.5 Shop Drawings, Submittals and RFIs

Prepare and maintain submittal log for approximately 25 submittals and/or shop drawings. Receive, log, distribute, and track submittal reviews and responses for project submittals. Prepare a submittal and documentation matrix for reference by contractor, EOR and construction management team. Prepare and maintain RFI log for 15 RFIs. Receive, log, distribute, and track RFIs and respond to construction contractor.

Subtask 2.5 Assumptions

- Twenty Five (25) shop drawings and submittals are assumed, with an average of two (2) hours per submittal. Assume five (5) additional re-submittals.
- Fifteen (15) RFIs are assumed, with an average of two (2) hours per RFI.

Subtask 2.5 Deliverables

- Updated Submittal Log
- Reviewed submittals and shop drawings returned to construction contractor
- Material Documentation including Approved RAM's, Certificate of Materials Origin, and Acceptance Documentation.
- Updated RFI Log
- Reviewed RFI responses to construction contractor

Subtask 2.6 Labor Compliance

Lead all labor compliance monitoring including the following tasks.

1. Track and file statements of intent to pay prevailing wages (Intent) and affidavit of paid wages (Affidavit).

2. Review and approve Request to Sublets (RTS).

3. Collect and review certified payroll and work with contractor and subcontractors to resolve deficiencies.

4. Coordinate wage rate interviews with construction inspector and contractors.

5. Oversee contractor FSBE compliance and reporting, including subcontract review, utilization reports.

Subtask 2.6 Assumptions

- Ten (10) Request to Sublets are assumed, with an average of one and half (1.5) hours per request.

- Five (5) monthly of Certified payroll review, with an average of four (4) hours per review

Subtask 2.6 Deliverables

- Requests to Sublet filed
- Intents and Affidavits filed
- Certified payroll filed
- Wage rate interviews filed
- FSBE reporting filed

Subtask 2.7 Project Closeout

Consultant will lead the close-out phase to document completion of the project and adherence to WSDOT LAG requirements. Consultant will provide complete project files to the City and perform the following duties to assist with project close-out.

Substantial Completion/Punch List: Upon substantial completion of work, Construction Inspector will provide punch list of any outstanding items and coordinate completion with contractor.

As-Built Drawings: Construction Inspector will confirm that the contractor is maintaining a set of "Record Drawings"

Project Closeout: Transfer project documentation to the City for permanent storage. Provide a thumb drive or other electronic transfer method with all electronic documents and pictures. Provide hard copies of documentation upon request. This includes PRM audit support if the City's project is selected for an audit.

Subtask 2.7 Deliverables

- Punch list
- Project Closeout Documents (Project documentation files including Electronic documents (in native format (docx, xlsx, dwg, etc.) as well as finalized/signed deliverables in a record format (such as pdf) and pictures on a thumb drive). Hard copies if requested.

Task 3 – Construction Inspection

Objective

Provide full time construction inspection to observe construction, monitor the work by the construction contractor, and document that the work is in general compliance with the Contract Documents. The Construction Inspector is to act as the City's on-site representative, is responsible for routine interfacing with the construction contractor and stakeholders, and is to observe the construction contractor's operations and work.

Subtask 3.1 Construction Inspection

The Construction Inspector's activities, in general, will include the following tasks.

1. Attend pre-construction conference, project, and weekly progress meetings.

2. Establish pre-construction site conditions using photo and video log of sites.

3. Observe/inspect the contractor's activities, operations, and work and document the contractor's work is in general compliance with the requirements of the contract documents. Observations will be completed on the standard WSDOT daily report form unless specified differently by the City.

4. Monitor the contractor's progress with respect to planned/scheduled work.

5. Document contractors and SBE subcontractors working onsite and conduct wage rate interviews for all SBE contractors, contractor and sub-contractors.

6. Document the contractor's construction activities (preparation of daily reports, photographs, etc.).
7. Create field note records of bid item work performed.
8. Verify and document that traffic control is per accepted traffic control plans when on-site.
9. Keep Construction Manager and City informed of project progress, issues, and developments.
10. Review minor change requests by the contractor.
11. Coordinate, observe, and document material testing and special inspection
12. Utility coordination with stakeholders
13. Track force account labor and equipment/materials; issue force account sheets for additional payment when required.
14. Maintain field construction records and as-built set.
15. Maintain photo log

Subtask 3.1 Assumptions

- Inspection hours are estimated at 45 hours per week for 85 working days (17 weeks) and includes attendance at all project meetings.

Subtask 3.1 Deliverables

- Daily progress reports, photos, force account documentation
- FSBE on site review
- Contractor and sub-contractors wage rate interviews
- Daily on-site contractor and sub-contractors list

Task 4 – Testing and Special Inspection Services During Construction

Objective

Work under this task includes material testing and special inspection services in accordance with LAG testing requirements and NHS Highway System requirements.

Subtask 4.1 Material Testing and Special Inspections

Consultant will assist the City in developing a quality assurance program. Consultant will provide material testing and special inspection as outlined and at the frequency indicated in the LAG Manual.

Subtask 4.1 Assumptions

- Testing level of effort based on assumptions included in HWA Geotechnical quote

Subtask 4.1 Deliverables

- Material test and special inspection test reports

Proposed Project Fee Estimate

Consultant proposes to perform this work on a time and expenses basis with a total not to exceed amount of $ 290,353. The proposed fee estimate is provided as “Attachment A.” Fee estimates are based upon Consultant’s approved indirect overhead rates.

EXHIBIT A - FEE

TRANSIT CONNECTION CORRIDOR PROJECT FEDERAL NO. CDS 0815(007)
CITY OF MOUNTLAKE TERRACE
PROPOSED FEE ESTIMATE

	LABOR CLASSIFICATION (HOURS)									Subconsultants			
	Construction Manager VI	Inspector IV	Construction Admin Specialist III	Construction Admin Specialist II	Administrative III	Hours	Labor Cost	Overhead	Fee	HWA	Subconsultant Total with Markup	Expenses	Total
	$85	$61	$49	$41	$47			193.46%	29.20%				
Task 1 - Project Management and Contract Administration													
Task 1.1 - Project Coordination	8					8	$ 682	$ 1,320	$ 205		$ -	$ -	$ 2,207
Task 1.2 - Invoices/Status Reporting	6				12	18	$ 1,077	$ 2,084	$ 323		$ -	$ -	$ 3,484
Task 1 Subtotal	**14**	**0**	**0**	**0**	**12**	**26**	**$ 1,759**	**$ 3,404**	**$ 528**	**$ -**	**$ -**	**$ -**	**$ 5,691**
Task 2 - Construction Contract Administration and Closeout (Consor)													
Task 2.1 - Pre-Construction Meeting	20	4	4			28	$ 2,146	$ 4,152	$ 644		$ -	$ -	$ 6,941
Task 2.2 - Weekly Construction Meetings	36		18			54	$ 3,959	$ 7,660	$ 1,188		$ -	$ -	$ 12,807
Task 2.3 - Construction Contract Administration	100		40			140	$ 10,504	$ 20,321	$ 3,151		$ -	$ -	$ 33,976
Task 2.4 - Monthly Progress Estimates	20		40			60	$ 3,682	$ 7,122	$ 1,104		$ -	$ -	$ 11,909
Task 2.5 - Shop Drawings, Submittals and RFIs	80		20			100	$ 7,810	$ 15,110	$ 2,343		$ -	$ -	$ 25,264
Task 2.6 - Labor Compliance	5			35		40	$ 1,847	$ 3,573	$ 554		$ -	$ -	$ 5,975
Task 2.7 - Project Closeout	20	20	20			60	$ 3,907	$ 7,559	$ 1,172		$ -	$ -	$ 12,638
Task 2 Subtotal	**281**	**24**	**142**	**35**	**0**	**482**	**$ 33,856**	**$ 65,497**	**$ 10,157**	**$ -**	**$ -**	**$ -**	**$ 109,509**
Task 3 - Construction Inspection													
Task 3.1 - Construction Inspection		765	0			765	$ 46,421	$ 89,806	$ 13,926		$ -	$ -	$ 150,152
Task 3 Subtotal	**0**	**765**	**0**	**0**	**0**	**765**	**$ 46,421**	**$ 89,806**	**$ 13,926**	**$ -**	**$ -**	**$ -**	**$ 150,152**
Task 4 - Testing and Special Inspection Services During Construction													
Task 4.1 - Material Testing and Special Inspections						0	$ -	$ -	$ -	$ 25,000	$ 25,000	$ -	$ 25,000
Task 4 Subtotal	**0**	**0**	**0**	**0**	**0**	**0**	**$ -**	**$ -**	**$ -**	**$ 25,000**	**$ 25,000**	**$ -**	**$ 25,000**
TOTAL - ALL TASKS	***295***	***789***	***142***	***35***	***12***	***1273***	***$ 82,036***	***$ 158,706***	***$ 24,611***	***$ 25,000***	***$ 25,000***	***$ -***	***$ 290,353***