Mountlake Terrace Planning Commission
Meeting Agenda
Monday, June 22, 2026, 6:00 PM
Mountlake Terrace City Hall, and via Telephone or Teleconference

AGENDA

1. Call to Order

2. Attendance Roll Call

3. Approval of the June 8, 2026 Meeting Minutes

4. General Public Comment

5. Public Hearings

a. Public Hearing: Infrastructure Improvements (Ch. 15.05 and 19.95 MTMC)

b. Public Hearing: Amend Chapter 18.10 MTMC

6. Discussion Items

a. Zoning Map Amendment (work session)

b. Terrace Station 5 Development Agreement (work session)

7. Director's Report

8. Miscellaneous Business by Call of Planning Commissioners

9. Adjournment

To listen to the meeting via telephone, call 1-253-215-8782. To watch the meeting online: 1) Go to https://zoom.us/join; 2) Enter meeting ID 832 0588 1330 and click "join". No passcode needed.

The City of Mountlake Terrace strives to provide access and services to all members of the public. Please notify the City at least one week prior to the event if reasonable accommodations are needed.

City of Mountlake Terrace
Guidelines on Addressing the Planning Commission

The Planning Commission welcomes public input at the appropriate time during a public meeting. If you wish to address the Commission, you will be called on when your hand is raised and recognized by the Planning Commission Secretary.

Anyone who is addressing the Planning Commission will need to state their name and city of residence at the beginning of their testimony, or comments.

To comment on an item not listed on the agenda, please address the Planning Commission at the time listed on the agenda as public comment.

To comment on an item listed on the agenda, please do so when the Chair calls for public comment during that particular agenda item.

Unless the Planning Commission Chair directs otherwise, comments on any item should not exceed five minutes per person.

To provide public comment or testimony remotely (via Zoom or telephone), please refer to the Public Comment and Public Hearing Testimony Protocol on the city website https://www.cityofmlt.com/458/Planning-Commission.

To submit written public comment or hearing testimony, mail to/drop off at City Hall (23204 58th Avenue W., Mountlake Terrace, WA 98043) or email remarks to Jennifer Joki, jjoki@mltwa.gov, no later than 4 p.m. on the public hearing date.

No person shall make personal attacks or threatening remarks while addressing the Council which disrupts, disturbs, or otherwise impedes the orderly conduct of the meeting. All hate speech will be construed as threatening remarks.

Purpose of Work Sessions

Occasionally the Planning Commission will discuss City topics in the form of a Work Session. The purpose of Work Sessions is for the Commission to collectively discuss ideas with each other, as well as observe staff presentations on selected topics. While the Planning Commission cannot take any official actions during a Work Session, the public is welcome to speak regarding an item before the Work Session begins. The public is always welcome to attend and monitor Planning Commission Work Sessions.

MOUNTLAKE TERRACE PLANNING COMMISSION
SPECIAL MEETING MINUTES

June 8, 2026
6:00 pm

Mountlake Terrace City Hall
and via Teleconference

Commissioners Present
Chair Bautista
Vice Chair Bettcher
Commissioner Finch
Commissioner Morgan
Commissioner Stenson (via Teleconference)
Commissioner Thompson (via Teleconference)
Commissioner Wu (via Teleconference)

Commissioners Absent
None

City Staff Present
City Clerk Jennifer Joki
Civil Engineer Lucas Kragt
Community Development Director Brooke Eidem

Guests Present
None

1. Call to Order
   Chair Bautista called the meeting of the to order at 6:06 pm

2. Roll Call
   City Clerk Jennifer Joki called roll.

3. Approval of May 27, 2026 Meeting Minutes
   The May 27 special meeting minutes were approved as amended.

4. General Public Comment
   None

5. Public Infrastructure Requirements
   Civil Engineer Lucas Kragt and Community Development Director Brooke Eidem

   Kragt presented on this item to include the purpose, current code, proposed exemptions, overhead utility undergrounding, and proposed undergrounding map.

DRAFT

Kragt and Eidem heard and responded to comments and questions regarding the timing, payment and costs for undergrounding, allowance and location of poles, transportation code, exemptions, frontage improvement requirements, and communicating requirement changes to residents.

6. Chapter 18.10 MTMC
Community Development Director Brooke Eidem

Eidem presented on this item to include the purpose, additions, retitling, development agreements, regulatory framework, and next steps.

Eidem heard and responded to questions and comment from commissioners regarding names of subareas, "as currently adopted" wording, and docket determination by council.

7. Consolidated Land Use Tables
Community Development Director Brooke Eidem

Eidem presented on this item to include the purpose, the required land use tables, how and why established, standardize for ease of use, proposal, and timeline.

Eidem heard and responded to questions and comments regarding updates on definitions, homework and feedback, mandated code changes, and July 10 due date.

8. Mixed Use Design Standards
Community Development Director Brooke Eidem

Eidem presented on this item to include the Vision 2044 Comprehensive Plan provided the framework, character, generalized uses, specific building heights, locations, building style survey responses, and summarized elements.

Eidem heard and responded to questions and comments regarding trees, pedestrian access, open space, right of way, readdressing subareas, comprehensive design standards, and unintended consequences, slot townhouses, and next steps.

9. Director's Report
Community Development Director Brooke Eidem

Eidem's report included:
- R-District going to City Council this week for their first discussion.
- Two public hearings at next Planning Commission meeting.
- August 24 anticipated public hearing date.

10. Miscellaneous Business by Call of Planning Commissioners
Commissioner Bettcher commented that after asking the Council Interview Committee how Planning Commission is doing they requested more communication and presentations to council.

11. Adjournment
The meeting adjourned at 8:04 pm.

These minutes are subject to approval at the next Mountlake Terrace Planning Commission meeting.

_____
City Clerk Jennifer Joki

DRAFT

Item: 5.a.

CITY OF MOUNTLAKE TERRACE

PLANNING COMMISSION STAFF REPORT

FROM: Lucas Kragt, Civil Engineer II
DATE: June 22, 2026
SUBJECT: Public Hearing: Infrastructure Improvements (Ch. 15.05 and 19.95 MTMC)

SUBJECT SUMMARY:

The Planning Commission will hold a public hearing to make a recommendation to the City Council on amendments to Chapters 15.05 and 19.95 MTMC related to infrastructure improvements for development proposals.

PUBLIC HEARING PROCEDURE:

a. Chair opens hearing
b. Staff presentation
c. Commission questions
d. Public testimony
e. Close hearing
f. Deliberations

BACKGROUND / ANALYSIS:

As discussed by the Planning Commission at the regular meeting on June 8, middle housing legislation limits the City's ability to impose regulations on multi-unit housing compared to single-unit housing. Currently, certain multi-unit developments are exempt from installing frontage improvements, while single-unit (fee simple) subdivisions are required to install them, as subdivisions automatically trigger these improvements. Multi-unit developments under HB 1110 bypass the land use permit process, avoiding frontage requirements. In practice, this means the same project could require improvements as a fee simple subdivision but avoid them if proposed as a multi-unit building. Developers can then convert these projects into condominiums later and sell the units individually, effectively achieving the same outcome as townhomes without providing any associated infrastructure.

This creates inconsistent standards and results in missed opportunities for sidewalks, utility upgrades, and other improvements that support walkability and long-term community infrastructure. A staff team from building, planning, and engineering has reviewed the exemption in MTMC 19.95.030 and is proposing a revision to ensure consistent requirements across housing types. The proposal removes the current exemption for single-unit construction to achieve equity between all new housing types, but maintains the state-mandated exemption for ADUs. For existing development, the proposal is to provide exemptions for interior

modifications and residential additions of up to 800 square feet.

The other public infrastructure improvement for discussion is electrical utilities. The City currently requires all electrical utilities to be underground, which can be cost-prohibitive for some projects. Based on discussions with Snohomish County PUD, staff has learned that aerial utilities are more resilient in some natural disasters than previously thought. Given this, it's worth considering whether the high cost of the improvement justifies the public benefit. Staff's proposal is to eliminate this requirement throughout the City except in the Town Center vicinity, based on the general power grid. Buried utilities would continue to be required in Town Center due to aesthetics as well as the width of sidewalks and pedestrian mobility requirements.

The Planning Commission discussed this item on June 8 and had several questions for staff. However, no revisions were proposed to the draft amendments. Those draft documents are attached, in addition to the Planning Commission Findings of Fact and Conclusions.

RECOMMENDATION:
MOTION to recommend City Council approval to amend Chapter 15.05 MTMC, Building Code, and Chapter 19.95 MTMC, Transportation Code, as presented.

MOTION to approve the Findings of Fact and Conclusions as presented.

LINKS:

ATTACHMENTS:
1. Draft 15.05.330 MTMC
2. Draft MTMC 19.95 excerpt
3. Planning Commission Findings of Fact
4. PH Infrastructure Presentation

15.05.330 Underground utility services.

A. The intent of this section is to provide for the undergrounding of power and other wireline services (data and communications) to the greatest extent practical and to avoid unnecessary extensions of overhead wireline services across City rights-of-way.

B. Where new electrical service to a property is underground, any other wireline service shall also be provided underground.

C. New Development. Any electrical or wireline service connecting to a new development or its accessory structure(s) shall be placed underground when the service is new, provided to a new or replaced building, or relocated by the property owner or their agent.

D. Modifications to Electrical Service for Existing Single-Family Dwellings.

1. Where there are modifications to electrical service for an existing single-family dwelling/accessory structure(s), and project improvements (remodels or other construction improvements) are made in excess of 50 percent of the assessed value of the single-family dwelling, utilities shall be undergrounded. Project improvement valuation will accumulate over a consecutive three-year period.

Exceptions:

a. When the nearest point of connection to the distribution system is an overhead facility on a utility pole and is greater than 100 feet away from the single-family dwelling, the property will be exempt from requiring undergrounding of power and other wireline services.

2. Where there are modifications to electrical service for an existing single-family dwelling/accessory structure(s) in town center zones, the property shall be required to provide for undergrounding of power and other wireline services, except in the case of a life safety situation.

~~E. No additional utility poles, traffic signal poles, or poles of similar type shall be installed for any reason without plans being first approved by the City and, as required, a utilities permit issued.~~

~~F. Any preexisting or new proposed overhead utility lines and services which are under 20,000 volts, and which go over and through a subdivision, planned unit development, or through commercial or industrial development, shall be placed underground as a requirement of approval of such development.~~

~~G. When and where overhead wires are being undergrounded in the public right-of-way, all other existing overhead lines shall be undergrounded as provided in MTMC 12.20.200.~~

E~~H~~. Night Lights. Night lights, yard lights, etc., shall not be powered by means of overhead wiring when the primary service to the house is already underground. (Ord. 2823 §§ 2 – 4, 2023; Ord. 2621 § 22, 2013; Ord. 2599 § 7, 2012; Ord. 2453 § 1, 2007).

DRAFT

19.95.030 Street design and access standards.

A. Purpose. It is the purpose of this section to establish design standards and development requirements for street improvements to provide for reasonable and safe access to public and private properties. These improvements include appropriately scaled sidewalks and landscape buffers related to the urban context, curbs, gutters, street paving, monumentation, and lighting, consistent with complete streets principles and fostering a sense of place in the public realm through attractive design amenities.

B. Exemptions. Exemptions to this section shall be authorized by the Community and Economic Development Director for development comprised of the following:

1. ~~New construction or a~~Addition of up to 800 square feet to an existing house~~with valuation less than 50 percent of assessed value that occurs or is permitted within any three-year period~~;

2. ~~Within the TC zoning district, i~~Interior remodels with valuation less than 50 percent of assessed value that occur or are permitted within any five-year period; or

~~3. Outside of the TC zoning district, interior remodels of any valuation; or~~

3~~4~~. The construction of up to ~~one single-family house, including~~ two accessory dwelling units~~, or the modification of or addition to an existing house; provided, that the lot on which a new house would be constructed is not part of a subdivision that occurred within the previous three years~~.

C. Right-of-Way Dedication Required.

1. Dedication Required for Development. Where the existing width for any right-of-way adjacent to a development site is less than the City's minimum standards, additional right-of-way dedication to provide an easement for roadway and public use will be required for the proposed development.

2. Waiver of Dedication. The Community and Economic Director, in consultation with the City Engineer, may waive the requirement for up to one-half of the right-of-way dedication needed to accommodate a full street right-of-way where he/she determines that either: (a) future development is reasonably feasible on the opposite side of the right-of-way from the site being developed and such future development can reasonably provide for the additional required right-of-way; or (b) due to geographic constraints, future development is not reasonably feasible on the opposite side of the right-of-way being developed.

D. Public Street Right-of-Way Design Standards.

1. Type of Improvements. The required minimum street improvements shall include but not be limited to curbs, gutters, landscape buffers, sidewalks, and lighting on each side of the street, except as provided under subsection (D)(2) of this section. Required improvements shall be designed and constructed in conformance with this chapter and other applicable statutes.

2. Unless required by another chapter of the Zoning Code, the requirement for amenity zones, landscape buffers, sidewalks, and lighting on either or both sides of a street may be waived by the City Engineer for development projects where he/she has determined that geographic constraints make installation not reasonably feasible or there is no need, including future need, for pedestrian access or circulation. For City-initiated street, sidewalk, or utility projects, the City Engineer may waive the requirement for amenity zones, landscape buffers, sidewalks, and lighting on either or both sides of the street pursuant to the criteria in subsection (E)(3) of this section.

3. Length of Improvements. Improvements required per subsection (D)(1) of this section shall extend along the full frontage of such property to be improved upon and sought to be occupied as a building site or parking area for the aforesaid building or platting purposes, and which may abut property dedicated as a public street. For properties with multiple street frontages, all frontages must be improved to the City's standards. Improvements shall be transitioned to existing facilities immediately outside of the property's street frontage; provided, that the Reviewing Official may waive this requirement where such a transition is not reasonably feasible or where future development is not likely to occur due to geographic constraints.

DRAFT

4. Minimum Sidewalk Measurements and Features. Sidewalks shall be a minimum of six feet wide and constructed of concrete unless another material has been approved by the City Engineer for the specific location; provided, that in certain zoning districts, as required by the Municipal Code or adopted design standards, sidewalk width shall be greater than six feet.

a. Where vertical obstructions less than seven feet in height occur, a minimum of four feet of horizontal clearance from the obstruction is required for pedestrian passage.

b. Bulb-outs may be required by the City's Transportation Engineer at street intersections, including but not limited to intersections where vehicle parking is allowed nearby, and at mid-block crossings, based on at least one of the following criteria: (i) the bulb-out will increase safety for the pedestrian attempting to cross the street at an intersection or marked crosswalk; or (ii) the bulb-out location is consistent with guidance from a referenced standard pursuant to MTMC 19.95.010(E). In addition, bulb-outs may be required by zoning district regulations.

c. Any pedestrian facilities, including curb ramps and pedestrian push buttons, immediately adjacent to or contained within the project boundaries shall be replaced with ADA-compliant pedestrian facilities.

d. Any curb ramp constructed must have an ADA-compliant companion ramp at the other side of the crossing. If there is an existing ramp at the other side of the crossing that does not meet current ADA criteria, the project will be required to remove and replace it with an ADA-compliant ramp.

5. Amenity zones shall be installed between the street curb and sidewalk or multi-use path, except where the City Engineer determines that amenity zones are not reasonably feasible due to geographic or right-of-way constraints. Amenity zones shall include grass or low-growing vegetation; provided, that in the Town Center, as well as along arterials and collectors in other areas approved by the City Engineer, the amenity zones may consist primarily of hardscape, rather than vegetation, and with trees protected in tree grates. Amenity zones shall be at least five feet in width; provided, that up to a two-foot reduction may be allowed where the full five-foot width is not reasonably feasible due to geographic or right-of-way constraints.

6. Multi-Use Paths. A minimum 12-foot-wide multi-use path may be installed along streets in place of the minimum six-foot sidewalk path where the City Engineer has determined that such a multi-use path would best accommodate a bicycle route that has been identified in the Comprehensive Plan and where pedestrian safety can be maintained.

7. Driveways. Driveway locations and dimensions are subject to requirements of the zoning district in which the driveways are located, pursuant to this title and other requirements of the City Code and state or federal statutes, and to traffic engineering criteria including roadway functional classifications, traffic volumes, sight distance, proximity to intersections and driveway spacing.

8. Bicycle Facilities. Bicycle facilities may be provided or required by the City in the form of bicycle lanes within the street, cycle tracks, multi-use paths, or any means indicated in the Comprehensive Plan or the Transportation Master Plan or approved by the City Engineer.

9. Vehicular Access and Connection Points to and From the State Highway System.

a. Chapter 47.50 RCW, Highway Access Management, and any amendments thereto, is hereby adopted by reference to provide for the regulation and control of vehicular access and connection points of ingress to and egress from the state highway system within the incorporated areas of the City of Mountlake Terrace.

b. Chapters 468-51 and 468-52 WAC, and any amendments thereto, are hereby adopted and incorporated by reference.

E. Complete Streets.

1. Principles. The City of Mountlake Terrace will plan for, design, and construct all new City transportation improvement projects with complete streets principles.

DRAFT

2. Department Implementation.

a. The Public Works Department will incorporate complete streets principles into the design and implementation of capital projects and the development of Engineering Details and Specifications and other rules, procedures, and standards, as appropriate.

b. The Public Works Department will uphold complete streets principles in developing and implementing City plans and in conducting its plan review and permitting responsibilities for transportation improvement projects.

c. The Public Works Department will carry out its activities to provide for sidewalks to be maintained free of obstructions and to inspect, repair, and replace sidewalks as appropriate. The Department will also prioritize maintenance of crosswalks, bike lanes, and other pavement markings, commensurate with available resources.

3. Exceptions. Complete streets principles, including the provision of amenity zones, will not apply:

a. To repairs made to the right-of-way;

b. To ordinary maintenance activities designed to keep assets in serviceable condition (e.g., mowing, cleaning, spot repair, and surface treatments including but not limited to chip seal treatments, or interim measures for detours, haul routes, and street closures);

c. To improvements solely for traffic signals or signage; provided, that such improvements shall consider the needs of pedestrians and bicyclists, as well as motorists, including mass transit users; or

d. Where the City Engineer, after consultation with the Community and Economic Development Director, issues a documented site-specific exception concluding that application of complete streets principles is unnecessary or inappropriate because:

i. It would be contrary to public safety or to requirements of a grant or law;

ii. The cost is excessively disproportionate to the project or possible use;

iii. The City cannot feasibly attain the additional right-of-way that would be needed;

iv. Other available means or factors indicate an absence of need, including future need; or

v. The City Council has directed that complete streets principles not be applied due to other special factors for a particular street or street segment.

4. Exceptions authorized under subsection (E)(3) of this section are site-specific and shall not constitute general changes to the minimum street standards established in this chapter or other chapters of the Municipal Code.

5. Timing and Funding. Complete streets may be achieved through single projects or incrementally through a series of smaller improvements or maintenance activities over time. Improvements to pedestrian and bicycle facilities shall be a priority for available funding, while balancing the need to meet other City responsibilities.

F. Street Design Standards. Streets and associated facilities, including but not limited to sidewalks, shall be designed in accordance with the City Engineering Development Manual and consistent with the Comprehensive Plan.

G. Access Improvements Required.

1. When nonresidential zoned property does not have frontage on an existing public right-of-way or when the City has identified a potential new street connection in its Comprehensive Plan to access nonresidential zoned property but the street has not yet been constructed, any development or change in use shall require the owner/developer to design and construct full-width street improvements through the property and to a point of appropriate connection with an existing public right-of-way. The improvements shall be designed so as to

DRAFT

establish an interconnected network of public streets and shall be constructed in accordance with this chapter and any other applicable City regulations and state or federal laws.

2. Once a street is constructed pursuant to subsection (G)(1) of this section, the property owner shall dedicate the right-of-way and its improvements to the City.

H. Private Streets – When Permitted.

1. Streets designed or constructed after November 1, 2012, shall be public and built to City standards; provided, that the Community and Economic Development Director may allow local access streets serving three or fewer single-family houses to be private when he/she determines that:

a. Geographic constraints or other practical difficulties would make City maintenance reasonably impractical; or

b. No existing or future need exists for additional traffic and/or pedestrian connections or to serve adjacent property.

2. Signage Required. Appurtenant traffic control devices including installation of traffic and street name signs shall be provided by the developer to mitigate traffic impacts, as required by the Traffic Engineer. The street name signs shall include a sign labeled "Private Street."

3. Easement Required. An easement will be required to create the private street.

4. Timing of Improvements. The private street must be installed prior to recording of the plat unless deferred through a process that includes a security device pursuant to Chapter 15.35 MTMC.

5. The private street must meet public street standards, except as otherwise provided by this chapter.

6. Private access street design and installation shall meet ADA requirements.

7. Private streets shall be paved.

8. The acceptance of an existing private street as a public street shall be based on the street being determined by the City Engineer to meet at least one of the following criteria:

a. Street is constructed to City standards; or

b. Street is classified as an arterial or collector (or meets criteria for being so classified) and assumption of maintenance does not create an undue burden for the City.

9. Any research performed by the City at an applicant's request to establish or verify that a street has been constructed to City standards, pursuant to subsection (H)(8)(a) of this section, is subject to the applicant's payment to the City of the hourly rate established in the development fee schedule, as adopted by the City Council.

I. Timing for Installation of Improvements. No building shall be granted a certificate of final occupancy, or plat or short plat recorded, until all the required street improvements are constructed in a satisfactory manner and approved by the responsible departments unless those improvements that remain unconstructed have been deferred by the Department of Community and Economic Development Director subject to security devices authorized under Chapter 15.35 MTMC.

J. Review of Construction Plans.

1. Submittal. All street improvement plans, excluding those prepared by the City or its designee for City capital improvements, shall be submitted for review and approval to the Community and Economic Development Department. All plans and specifications for such improvements are to be submitted at the time application for a building permit is made or, for plats, prior to construction (street/utility) permit issuance. All street

DRAFT

improvement plans prepared by the City or its designee for City capital improvements shall be submitted for review and approval to the City Engineer.

2. Fees and Submittal Requirements. All permits required for the construction of street improvements shall be applied for and obtained through the Community and Economic Development Department. Activities requiring permits shall include but are not limited to cutting, excavating or disturbing of streets, alleys, pavement or improvements within the public right-of-way and to the alteration, expansion, or creation of public or private transportation facilities, including driveways. Fees shall be as stipulated pursuant to MTMC 3.150.090.

K. Inspections. An inspector designated by the Community and Economic Development Director shall be responsible for the supervision, inspection and acceptance of all street improvements listed in this section, and shall make a charge therefor to the applicant pursuant to fee requirements under MTMC 3.150.090; provided, that for any City-initiated street or utility projects, an inspector appointed by the City Engineer shall be responsible for the supervision and inspection of street or utility improvements.

L. Deferral of Improvement Installation. Improvements may be deferred only as provided in Chapter 15.35 MTMC.

M. Relationship to Other Codes. Where, related to streets, access easements, and rights-of-way, any conflicts exist between MTMC Title 17 (Subdivisions) and this section, requirements of this section shall prevail and govern.

N. Appeals – Violations.

1. Any decisions made in the administrative process described in this section may be appealed to the Hearing Examiner pursuant to Chapter 2.120 MTMC, Hearing Examiner.

2. Unless otherwise specified, violations of this chapter are misdemeanors, and, upon conviction thereof, shall be punished by a fine not to exceed $1,000 or 90 days in jail, or both such fine and jail. (Ord. 2863 § 1 (Exh. A), 2024; Ord. 2792 § 14, 2021; Ord. 2755 §§ 24, 25, 2019; Ord. 2662 § 2, 2015; Ord. 2597 § 2, 2012).

19.95.040 Street excavation and construction standards.
Reserved. (Ord. 2597 § 2, 2012).

19.95.050 Performance and maintenance guarantees.
A. Intent. The intent of this section is to ensure that, when development occurs, a form of security is in place to provide for the required improvements to be completed, as well as any necessary repairs to be made to City facilities should the required improvements or repairs not be completed to the City's standards by a specified period of time.

B. Performance and Maintenance Guarantees. The City's requirements for performance and maintenance guarantees are established in Chapter 15.35 MTMC and shall be applied to this chapter. (Ord. 2863 § 1 (Exh. A), 2024; Ord. 2597 § 2, 2012).

19.95.060 Streets – Special regulations.
A. Street Names. The naming of streets and assigning of addresses is a responsibility of the Community and Economic Development Department consistent with Chapter 12.25 MTMC.

B. Functional Classification. Designation of streets by functional classification shall be as identified in the Transportation Element of the Comprehensive Plan; provided, that the City Engineer may identify additional or alternate designations to be used when a new federal functional classification is approved after the adoption of the City's last annual Comprehensive Plan amendment(s). Such additional or alternate designations shall be included in the next Comprehensive Plan amendment process.

C. Monuments. No surface monuments or hubs found on the line of excavation work shall be disturbed unless the disturbance is ordered by the City Engineer. All street monuments, property corners, bench marks, and any other monuments disturbed during the progress of the work or any other activity shall be replaced by a licensed surveyor to meet requirements of the City Engineer and the cost of the same shall be paid by the person that disturbed the monument or by another party on the person's behalf.

DRAFT

D. Trees in Town Center Pedestrian Activity Areas. Within the BC/D zoning district, street trees within any pedestrian activity area and constructed in accordance with Town Center Design Standards shall be maintained by the adjacent property owner. Such trees shall not be trimmed, cut, removed, or damaged unless the City determines such action is needed. The City may require an arborist's opinion before making a determination. Any removed trees shall be replaced by the adjacent property owner pursuant to City standards within 60 days of the tree removal; provided, that the City may grant a longer replacement period if necessary due to severe weather or other conditions that would affect the health of the replaced tree(s).

E. Bus Stops.

1. Bus stops shall be accommodated at appropriate places within the street network, as determined by the Traffic Engineer, taking into account transit service needs, public safety, and traffic flow.

2. Convenient pedestrian access between any commercial or multifamily residential buildings and adjacent bus stops shall be provided as a condition of development.

3. Dedication of an easement or right-of-way to locate bus stops and related appurtenances may be required by the Traffic Engineer where a transit agency serving the City has identified such stops as necessary to reasonably accommodate its bus service for routes consistent with the transit agency's six-year plan.

F. Street Signs. City street signs shall be maintained and installed per direction of the City Engineer. (Ord. 2863 § 1 (Exh. A), 2024; Ord. 2597 § 2, 2012).

G. Overhead Utilities

1. No additional utility poles, traffic signal poles, or poles of similar type shall be installed for any reason without plans being first approved by the City and, as required, a utilities permit issued.

2. Any preexisting overhead or new proposed utility lines and services which are located within or next to a development within the region defined by Interstate 5 on the west, 230th St SW on the north, 55th Ave W or its extension on the east, and 244th St SW on the south, shall be placed underground as a requirement of approval of such development.

3. When and where overhead wires are being undergrounded in the public right-of-way, all other existing overhead lines shall be undergrounded as provided in MTMC 12.20.200.

DRAFT

Mountlake Terrace Planning Commission Findings of Fact & Conclusions

Based on the review of the proposed code amendments to amend Chapters 15.05 and 19.95 MTMC, the Planning Commission of the City of Mountlake Terrace makes the following Findings of Fact:

1. The City has the authority under RCW Title 35A to adopt regulations related to land use development.

2. The City has adopted a Zoning Code as Title 19 of the Mountlake Terrace Municipal Code ("Zoning Code") to implement the Comprehensive Plan and to ensure compatible and rational land development and land use in all portions of the City.

3. The City Council seeks to reduce financial barriers for development and redevelopment in the city, while meeting the intent of the Town Center Subarea Plan and applicable design standards.

4. On June 26, 2025, the Mountlake Terrace City Council adopted Ordinance 2884 to implement state legislation related to middle housing and accessory dwelling units.

5. State law prohibits cities from requiring development regulations for middle housing that are more restrictive than those required for detached single-family residences (RCW 36.70A.536(1)(b)(i)), and specifically exempts accessory dwelling units from public street improvements (RCW 36.70A.681(1)(l)).

6. The Planning Commission held a work session to consider the matter and the impacts of the proposed amendments on June 8, 2026.

7. The following Comprehensive Plan policies support the proposed code amendments:

   HO-1.5: Develop and implement creative solutions for development regulations and incentive-based tools to encourage the production of ownership and rental housing affordable to all income levels.

   LU-3.6: Encourage quality smaller scale infill and redevelopment projects in existing neighborhoods.

   UT-2.2: Require undergrounding of new electrical distribution and communication lines where appropriate to improve redundancy and reliance in the system.

8. Pursuant to RCW 36.70A.106 and consistent with the City of Mountlake Terrace procedures, on June 2, 2026, the City notified the Washington State Department of Commerce of the City's intent to amend development regulations.

9. Pursuant to the State Environmental Policy Act, the City of Mountlake Terrace was designated as the lead agency for review of the proposed amendments. On June 9, 2026, a Determination of Non-Significance was issued on the proposed code amendments pursuant to WAC 197-11-355. No appeal of that determination was received so the determination became final.

10. A Notice of Public Hearing, consistent Mountlake Terrace Municipal Code requirements, was published on June 12, 2026.

11. On June 22, 2026, the City of Mountlake Terrace Planning Commission held a public hearing to consider code amendments to amend Chapters 15.05 and 19.95 MTMC. After hearing a staff presentation on the proposed amendments, asking questions, and receiving public testimony, the public hearing was closed and the Commission deliberated before making its recommendation to the City Council that the proposed code amendments be approved.

Based on the foregoing Findings of Fact, the Mountlake Terrace Planning Commission hereby makes the following conclusions:

1. The proposed code amendments will implement and be consistent with the goals and policies of the City of Mountlake Terrace Comprehensive Plan.
2. The proposed code amendments are consistent with the Washington State Growth Management Act.
3. The proposed code amendments are consistent with the Washington State Environmental Policy Act (Chapter 43.21C RCW).
4. The proposed code amendments will protect the public health, safety, and general welfare.
5. No new impacts will be created by modifying the exemptions for utility and frontage improvements.
6. The proposed code amendments will provide clear and equitable requirements for infrastructure associated with housing development in the City.

Date:_____

By:_____
Nick Bautista, Planning Commission Chair

CITY OF MOUNTLAKE TERRACE

PUBLIC HEARING: INFRASTRUCTURE IMPROVEMENTS

June 22, 2026

PURPOSE & BACKGROUND

- Middle housing changes created gap in requirements for constructing frontage improvements
- MTMC currently exempts single family and ADUs from frontage improvements and requires underground utilities for most new development and redevelopment
- Need to revise exemptions for consistency with middle housing requirements and reduce financial barriers to development projects

CITY OF MOUNTLAKE TERRACE

PROPOSED CHANGES

- **MTMC 15.05.330** – remove subsections (E), (F), (G) related to underground utilities
- **MTMC 19.95.030** – revise frontage improvement exemptions
  - Addition up to 800 square feet
  - Interior remodels under 50% of the assessed value
  - Construction of up to 2 ADUs
- **MTMC 19.95.060** – add new subsection (G) related to underground utilities

CITY OF MOUNTLAKE TERRACE

PROPOSED UNDERGROUNDING MAP

Proposal will only underground existing overhead utilities near Town Center as shown in green

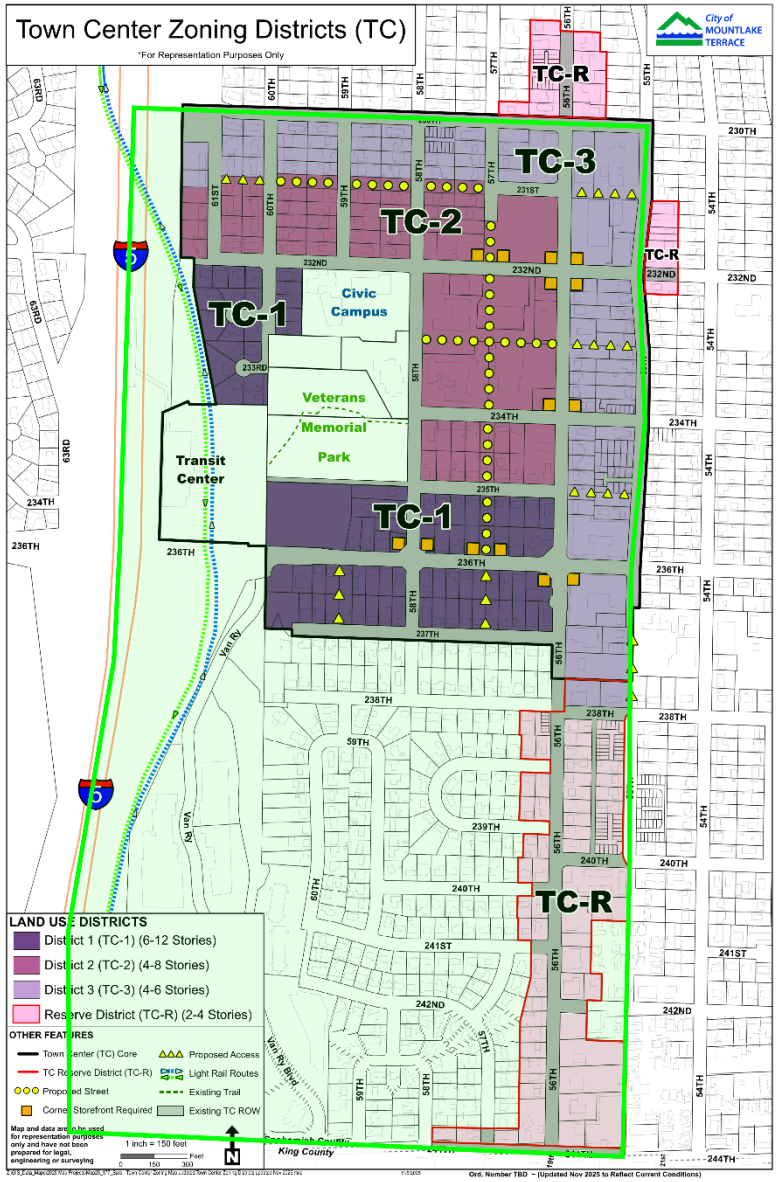

CITY OF MOUNTLAKE TERRACE

RECOMMENDED MOTIONS

- **MOTION** to recommend City Council approval to amend Chapter 15.05 MTMC, Building Code, and Chapter 19.95 MTMC, Transportation Code, as presented.
- **MOTION** to approve the Findings of Fact and Conclusions as presented.

CITY OF MOUNTLAKE TERRACE

Item: 5.b.

CITY OF MOUNTLAKE TERRACE

PLANNING COMMISSION STAFF REPORT

FROM: Brooke Eidem, Community Development Director
DATE: June 22, 2026
SUBJECT: Public Hearing: Amend Chapter 18.10 MTMC

SUBJECT SUMMARY:

The Planning Commission will hold a public hearing to make a recommendation to the City Council on amendments to Chapter 18.10 MTMC related to the Administrative Procedures amendment package.

PUBLIC HEARING PROCEDURE:

a. Chair opens hearing
b. Staff presentation
c. Commission questions
d. Public testimony
e. Close hearing
f. Deliberations

BACKGROUND / ANALYSIS:

The Planning Commission discussed this item at the regular meetings on May 11 and June 8. Amendments are proposed to several chapters of the Municipal Code related to administrative procedures that are intended to streamline the permitting process, update the administrative regulations in general, and integrate new requirements of the Local Project Review Act (RCW 36.70B).

Background

SB 5290 was passed by the Washington State Legislature in 2023, amending RCW 36.70B related to permit processing procedures for local governments. The City's administrative procedures are largely contained in Chapter 18.05 MTMC. However, there are associated amendments in several other chapters that are necessary to address the requirements comprehensively. In all, six chapters are involved in the administrative procedures amendment package, as discussed by the Planning Commission on May 11. Because much of the project is procedural in nature, the Planning Commission is not required to provide an official recommendation except for Chapter 18.10 specifically, where the proposed development agreements section falls under the Planning Commission's purview.

Chapter 18.10 - Comprehensive Plan

This chapter officially adopts the Comprehensive Plan and supporting documents. This is the most appropriate chapter to address the annual amendment process, which is currently located at the end of Chapter 18.05. The proposal is to relocate the process sections from Chapter 18.05 and the official adoption sections from Chapter 19.10 into this chapter, update the language to ensure the chapter is up-to-date, and better address annual docketing. This process will be clarified through a combination of new language and integrating the procedures that were previously in MTMC 18.05.300 and 18.05.310. Language related to rezones and text amendments will also be relocated from MTMC 19.10.020 and 19.10.030.

Additionally, a new section is proposed addressing development agreements, authorized by RCW 36.70B.170. Although the statute provides the ability to enter into a development agreement regardless of whether the City has a local ordinance, the proposed regulations offer an additional layer of protection for the City, including an established process and the ability to require mitigation in the form of funding public infrastructure, services, or facilities. This section is the only portion of the proposal that is a development regulation. Thus it is subject to a formal recommendation from the Planning Commission and being brought forward in a separate ordinance.

The Planning Commission reviewed the draft chapter at the meeting on June 8th and requested a revision MTMC 18.10.015, *Subarea plans*. The request was to simplify the section similar to the supporting documents section. Staff has revised the language to add reference to subareas plans as a new subsection (I) in *Supporting documents adopted* to integrate the Planning Commission's edits and proposes to repurpose section 18.10.015 to reference early and continuous participation.

RECOMMENDATION:
MOTION to recommend City Council approval to amend Chapter 18.10 MTMC as presented.

MOTION to approve the Findings of Fact and Conclusions as presented.

LINKS:

ATTACHMENTS:
1. Draft Ch 18.10
2. Planning Commission Findings of Fact
3. PH 18-10 Presentation

Chapter 18.10. COMPREHENSIVE PLAN AND REGULATORY AMENDMENTS, AND DEVELOPMENT AGREEMENTS

18.10.010. Comprehensive Plan adopted.

The Comprehensive Plan of the City of Mountlake Terrace and any amendments thereto are incorporated by reference as though fully set forth and adopted as the Comprehensive Plan for the City of Mountlake Terrace pursuant to the Growth Management Act of 1990 as amended (Chapter 36.70A RCW and related statutes).

Consistent with state law, the Comprehensive Plan and any amendments thereto shall serve as the guiding framework for decisions relating to land use, environment, economic vitality, housing, capital facilities, parks, recreational facilities, transportation, and utilities.

18.10.015. ~~Subarea plans~~Public participation.

The City encourages early and continuous public participation in the comprehensive planning, development regulation, and rezone process. Public notification procedures have been adopted in MTMC 18.05.150 that are consistent with the requirements of 36.70A RCW.

~~A. One or more subarea plans may be adopted by the City of Mountlake Terrace to augment the Comprehensive Plan by providing more detailed planning for a particular area of the City.~~

~~B. The Melody Hill Subarea Plan and any amendments thereto are incorporated by reference as though fully set forth and adopted as a subarea plan for the City of Mountlake Terrace, pursuant to the Growth Management Act.~~

~~C. "A Vision for the Mountlake Terrace Town Center Plan" and any amendments thereto are incorporated by reference as though fully set forth and adopted as a subarea plan known as the Town Center Plan, pursuant to RCW 36.70A.080(2).~~

18.10.020. Supporting documents adopted.

The ~~previously approved~~ documents~~,~~ listed below~~,~~ are adopted as supporting documents for the Comprehensive Plan:

A. Stormwater Comprehensive Plan, as currently adopted~~2019~~;

B. Comprehensive Sewer System Plan, as currently adopted~~2019~~;

C. Comprehensive Water System Plan, as currently adopted~~2017~~;

D. Economic Vitality Strategy, as currently adopted~~2008~~;

E. Transportation Master Plan, as currently adopted~~2007~~;

DRAFT

F. Sustainability Strategy, as currently adopted~~2008~~;

G. Recreation, Parks and Open Space Master Plan, as currently adopted~~2015, as amended by 2016 Supplement~~; and

H. Shoreline Master Program, as currently adopted~~2019~~.

I. Subarea plans and any amendments thereto.

18.10.030. Maps incorporated by reference.

A. The location and boundaries of designated land use districts shall be shown on the Comprehensive Plan map entitled "Official Comprehensive Plan Map" and, for Town Center designations, shall be shown on the Town Center Plan map entitled "Town Center Land Use Plan." These maps and any amendments thereto are hereby incorporated by reference into the Comprehensive Plan as though fully set forth.

B. The roadway functional classifications of the City's street network shall be shown on the Comprehensive Plan map entitled "Roadway Functional Classification Map". This map and any amendments thereto are hereby incorporated by reference as though fully set forth.

18.10.040. Copies of Plan.
Three copies of the Comprehensive Plan shall be kept on file in the office of the City Clerk.

18.10.050. Filing.
A certified copy of the ordinance codified in this chapter, together with certified copies of the aforesaid Comprehensive Plan, including the Official Comprehensive Plan Map, shall be transmitted by the City Clerk to the Office of the County Auditor of Snohomish County, Washington, to be filed in the manner and form required by law. A copy of the aforesaid plan shall also be transmitted to the State Department of Commerce, as required by law. A copy of the Transportation Element of the Plan shall be transmitted to the Puget Sound Regional Council for certification, as required by law.

~~18.05.300. Comprehensive Plan and Map.~~
18.10.060 Comprehensive Plan Amendment Procedures.

A. *Frequency and Content for Updating the Comprehensive Plan*. The Comprehensive Plan shall be updated no more often than once every year, except for amendments proposed under those circumstances provided for in RCW 36.70A.130(2)(a)(i) through (2)(a)(v). The update shall consider levels of service for transportation, sewer and water, and may consider other levels of service such as police and fire services, park facilities and programs, planning, engineering, ~~and~~ building services, and financial office

DRAFT

services. The purpose of considering levels of service is to assure concurrency of development with levels of service.

B. *Docket*. The Comprehensive Plan shall also consider a docket of items which may be used to add to~~,~~ or amend~~change~~, the Comprehensive Plan. The docket is maintained by the Director. The amendment proposal~~need for change~~ may relate to a need to revise~~change~~ the Comprehensive Plan Map, or a need to change the Plan to provide consistency with ~~a change, or need to change,~~ the zoning text.

C. *Update Procedure*. Approximately once per year~~nine months after the last Comprehensive Plan and Map update~~, the Director shall establish a docketing process whereby any interested person may submit an application to amend the City's Comprehensive Plan, including the following:~~review items that have accumulated in the docket.~~

1. The Director shall inform the public, through a public outreach program that may include public notice in a paper of general circulation, ~~as~~ an information item on the agendas of the City Council, Planning Commission, and Hearing Examiner, and in regular posting places of the City, that the City shall consider an update of the Comprehensive Plan and Map.

2. This notice shall include the purpose(s) of updating the Comprehensive Plan and Map, a deadline for submitting recommended changes, adding to the docket, and a tentative hearing schedule.

3. After the application deadline, the Director shall compile a preliminary docket consisting of all applications that were determined to include all of the required submittal items for consideration by the City Council.

4. The City Council shall consider the proposals on the preliminary docket and decide which, if any, shall be placed on the final docket. Criteria shall include whether the proposal is consistent with the vision for the City and whether there are adequate staff resources to properly evaluate and process the proposal. Decisions by the City Council on which items to place on the final docket are legislative and discretionary.

D. *Planning Commission*. The Planning Commission shall hold at least one public meeting on the docket of items and/or recommendations to change the plan and map, and may request City Council to recommend any areas for study.

The Planning Commission may establish sub-committees for study which shall include members of the public and at least two Planning Commissioners. In all cases, the sub-committee shall have a majority representing residents of the City.

DRAFT

At the public meetings, the Planning Commission shall consider the information from public testimony, subcommittees, and staff. Following consideration of changes and verifying concurrency of recommended change with levels of service for transportation, sewer, and water, the Planning Commission shall recommend changes in the Comprehensive Plan and Map to City Council.

E. The City Council shall review the recommendation of the Planning Commission in a regularly scheduled meeting and set a public hearing to consider changes to update the Comprehensive Plan and Map. The public hearing for changes in the Comprehensive Plan and Map may be held at the same meeting when recommended changes to the zoning text and map consistent with the Comprehensive Plan amendments are also heard.

F. A sub-area plan may be adopted at any time as long as it is generally consistent with the Comprehensive Plan and concurrency is provided with appropriate levels of service.

18.10.070 Amendment requirements.

A. *Zoning text amendments.* The zoning text may be changed at any time as long as the change is consistent with the Comprehensive Plan. Immediately following a change(s) in the Comprehensive Plan and Map, the Zoning Ordinance text and map must be changed to be consistent with the Comprehensive Plan and Map.

B. *Comprehensive Plan and map amendments.* When the docket is reviewed and the public is informed of the update for the Comprehensive Plan and Map, the public shall also be notified that:

1. Any rezone requests should be consistent with the Comprehensive Plan Map; and

2. A request to change the Zoning Map may involve a change in the Comprehensive Plan Map.

C. The Planning Commission shall have a public hearing and make a recommendation to City Council consistent with MTMC § 18.05.180 and § 18.05.300(D).

D. The City Council shall hold a public hearing and make a final determination on the zoning text or map changes consistent with MTMC § 18.05.200.

E. *Criteria for Review and Conclusions of Law*. The Hearing Examiner shall consider the following criteria in making their recommendation to the City Council on any Zoning Map change. The Council may approve the rezone request only if the proposal conforms to all of the following criteria. The Council shall adopt findings and conclusions for the record which support their decision.

DRAFT

1. The proposal is in accordance with the Comprehensive Plan;

2. Any parcel of land contained in this request, whether under single or unified ownership, is not receiving special or privileged treatment;

3. The proposal will not be materially detrimental to properties in the vicinity or the community based on the entire range of uses allowed in the proposed zone;

4. Adequate public services will be available to serve the full range of proposed uses;

5. The reclassification is warranted because of a change in circumstances, or because of a need for additional property in the proposed zoning district classification, or because the proposed zoning classification is appropriate for reasonable development of the subject property; and

6. The proposed rezone would promote the general health, welfare, and safety of the community.

18.10.080 Development agreements.

The city may enter into a development agreement with a person having ownership or control of real property within its jurisdiction or outside its boundaries as part of an annexation agreement. A development agreement must set forth the development standards and other provisions that shall apply to and govern and vest the development, use, and mitigation of the development of the real property for the duration specified in the agreement.

A. *Purpose*. The purpose of this section is to implement RCW 36.70B.170, which authorizes the city to enter into a development agreement with persons having ownership or control of real property. The City Council finds that development agreements may be an appropriate means to consolidate and address many issues involved in complex development projects in a single controlling instrument that benefits the city, its residents, and the public. Use of development agreements may further the objectives of the Comprehensive Plan and development regulations adopted pursuant to the Comprehensive Plan.

B. *Review process*. A duly noticed public hearing pursuant to RCW 36.70B.200 and recommendation on the development agreement shall be made to the City Council by the Planning Commission. The development agreement shall be subject to review and approval by the City Council based on the record of the planning commission hearing. The decision of the City Council to approve or reject a request for a development agreement shall be a discretionary, legislative act.

C. *Fees*. Fees for a development agreement review shall be as established by city schedule and collected at the time of the development agreement application.

DRAFT

D. *Flexibility in application of development standards*. A development agreement shall be consistent with applicable development regulations to the fullest extent possible; provided, a development agreement may allow development standards that differ from those otherwise imposed under the Mountlake Terrace Municipal Code in order to provide flexibility to achieve public benefits, respond to changing community needs, or encourage modifications that provide the functional equivalent or adequately achieve the purposes of otherwise applicable City standards. Any development standards approved pursuant to a development agreement that differ from those in this code shall not require any further zoning reclassification, variance from City standards or other City approval apart from development agreement approval. The development standards as approved through a development agreement shall apply to and govern the development and implementation of each covered site in lieu of any conflicting or different standards or requirements elsewhere in the Mountlake Terrace Municipal Code. Subsequently adopted standards that differ from those of a development agreement adopted by the city as provided in this chapter shall apply to the covered development project only where necessary to address imminent public health and safety hazards or where the development agreement specifies a time period or phase after which certain identified standards can be modified. Determination of the appropriate standards for future phases which are not fully defined during the initial approval process may be postponed. Building permit applications shall be subject to the building codes in effect when the permit is applied for.

E. *Police power and contract authority*. Pursuant to RCW 36.70B.170(4), the execution of a development agreement is a proper exercise of the City's police power and contract authority. Accordingly, a development agreement may obligate a party to fund or provide services, infrastructure, or other facilities. A development agreement shall reserve authority to impose new or different regulations to the extent required by a serious threat to public health and safety.

F. *Form*. Development agreements shall be consistent with RCW 36.70B.170 through 36.70B.210. All development agreements shall be in form and content as approved by the City Attorney.

DRAFT

Mountlake Terrace Planning Commission Findings of Fact & Conclusions

Based on the review of the proposed code amendments to amend Chapter 18.10 MTMC, the Planning Commission of the City of Mountlake Terrace makes the following Findings of Fact:

1. The City has the authority under RCW Title 35A to adopt regulations related to land use development.

2. It is necessary to revise the City's regulations for permit processing for consistency with Senate Bill 5290, which passed the Washington State Legislature in 2023 and amended portions of the Local Project Review Act with an effective date in January 2025.

3. Amendments to Chapter 18.10 MTMC are being proposed to accommodate the necessary updates to appropriately address the new state legislation.

4. RCW 36.70B.170 authorizes the City to enter into a development agreement with persons having ownership or control of real property.

5. The City Council seeks to establish guidelines for development agreements within the City, which are not intended to be inclusive, nor are they intended to address all administrative policies related to processing applications for land use and development.

6. The Planning Commission held work sessions to consider the matter and the impacts of the proposed amendments on May 11, 2026 and June 8, 2026.

7. The following Comprehensive Plan policies support the proposed code amendments:

   EV-2.1: Encourage higher density housing, commercial, and mixed-use development near existing commercial nodes and planned or existing transit facilities to increase the customer base of local businesses.

   EV-3.2: Support development patterns in Town Center and identified mixed use and neighborhood centers that provide pedestrian-level shopping, dining, and service opportunities, supporting a vibrant and active pedestrian experience.

   HO-1.5: Develop and implement creative solutions for development regulations and incentive-based tools to encourage the production of ownership and rental housing affordable to all income levels.

8. Pursuant to RCW 36.70A.106 and in accordance with City of Mountlake Terrace procedures, on June 2, 2026, the City notified the Washington State Department of Commerce of the City's intent to amend development regulations.

9. Pursuant to the State Environmental Policy Act, the City of Mountlake Terrace was designated as the lead agency for review of the proposed amendments. On June 9, 2026, a Determination of Non-Significance was issued on the proposed code amendments pursuant to WAC 197-11-355. No appeal of that determination was received so the determination became final.

10. A Notice of Public Hearing, consistent Mountlake Terrace Municipal Code requirements, was published on June 12, 2026.

11. On June 22, 2026, the City of Mountlake Terrace Planning Commission held a public hearing to consider code amendments to amend Chapters 15.05 and 19.95 MTMC. After hearing a staff presentation on the proposed amendments, asking questions, and receiving public testimony, the public hearing was closed and the Commission deliberated before making its recommendation to the City Council that the proposed code amendments be approved.

Based on the foregoing Findings of Fact, the Mountlake Terrace Planning Commission hereby makes the following conclusions:

1. The proposed code amendments will implement and be consistent with the goals and policies of the City of Mountlake Terrace Comprehensive Plan.
2. The proposed code amendments are consistent with the Washington State Growth Management Act.
3. The proposed code amendments are consistent with the Washington State Environmental Policy Act (Chapter 43.21C RCW).
4. The proposed code amendments will protect the public health, safety, and general welfare.
5. No new impacts will be created by amending Chapter 18.10 MTMC and adopting regulations for development agreements.
6. The proposed code amendments will remove ambiguity and improve clarity for middle housing development in the City.

Date:_____

By:_____
Nick Bautista, Planning Commission Chair

CITY OF MOUNTLAKE TERRACE

PUBLIC HEARING: CHAPTER 18.10

June 22, 2026

CHAPTER 18.10 MTMC

- Discussed May 11 for the purpose of Administrative Procedures amendments package
- Amending to add Comprehensive Plan amendment procedures, docketing process, formally adopt roadway classification map, etc
- Discussed June 8 for purpose of proposal to adopt regulations for development agreements process pursuant to RCW 36.70B.170
- Retitling chapter "*Comprehensive Plan and Regulatory Amendments, and Development Agreements*"

CITY OF MOUNTLAKE TERRACE

SUBAREA PLANS

- Planning Commission requested revision to section 18.10.015
- Simplify reference to subareas
- Staff proposal adds reference to "Supporting documents" section as subsection (I): "Subarea plans and any amendments thereto."
- Add "Public Participation" policy to 18.10.015:

"The City encourages early and continuous public participation in the comprehensive planning, development regulation, and rezone process. Public notification procedures have been adopted in MTMC 18.05.150 that are consistent with the requirements of 36.70A RCW."

CITY OF MOUNTLAKE TERRACE

DEVELOPMENT AGREEMENTS

- Authorized in RCW 36.70B.170
- Requires a public hearing per RCW 36.70B.200
- Provides level of certainty for both parties
  - **Developer** is assured that development standards will not change during course of project, and can address project phasing in agreement without having permits expire
  - **City** is assured that development aspects will not change and can negotiate for additional public benefits, improvements, and mitigation
- MTMC 18.10.080 provides basic regulatory structure for the City to process development agreements, charge fees, apply flexibility in exchange for public benefit, and enter into agreements

CITY OF MOUNTLAKE TERRACE

RECOMMENDED MOTIONS

- **MOTION** to recommend City Council approval to amend Chapter 18.10 MTMC as presented.
- **MOTION** to approve the Findings of Fact and Conclusions as presented.

CITY OF MOUNTLAKE TERRACE

Item: 6.a.

CITY OF MOUNTLAKE TERRACE

PLANNING COMMISSION STAFF REPORT

FROM: Sara Pizzo, Senior Planner
DATE: June 22, 2026
SUBJECT: Zoning Map Amendment (work session)

SUBJECT SUMMARY:

The property owner of two lots located at 6001 237th St SW and 5906 236th St SW (a total 95,731 square foot area) has proposed to rezone this property to be consistent with the Comprehensive Plan, Vision 2044, land use designations. Additionally, the applicant is looking to make minor adjustments to the zoning map delineation lines to match the property lines recently adjusted through a boundary line adjustment.

BACKGROUND / ANALYSIS:

The existing zoning designations of the area include Town Center 1 (TC-1), Residential-2 (4800), and Freeway Tourist (F/T). The Comprehensive Plan's land use element designates this area as Town Center 1 (TC-1), Neighborhood Mixed Use (NMU), and Gateway Mixed Use (GMU). The zoning proposal is to update the zoning map to be consistent with the Comprehensive Plan.

Per Vision 2044, Town Center 1 land is designated for transit-oriented employment development, multi-family, and supportive commercial uses. The purpose of NMU is to provide land at sufficient densities for multifamily residences and encourage mixed-use buildings that provide for day-to-day needs of surrounding residents. GMU is intended to provide land for commercial and multifamily mixed-use buildings that are more service-oriented and non-residential.

The applicant, Sierra Construction, has proposed the zoning map amendment because they are interested in developing the properties sooner than staff's timelines for amending the zoning map. Two multifamily residential developments are being planned for this area. Terrace Station 4 is proposed on Lot 1 and is currently in review. The applicant has completed a pre-application conference for the development of Terrace Station 5, located on Lot 2. Both of these developments are administrative decisions. However, Lot 2 cannot be redeveloped with a multifamily use until the zoning has been changed from R-2 to Neighborhood Mixed Use, consistent with the Comprehensive Plan. Lot 2 also contains the Freeway Tourist (F/T) district, which is proposed to be updated to GMU, consistent with the Comprehensive Plan. A few additional minor changes are proposed so that the zoning delineation lines and the property lines match, to help remove potential development constraints without impacting the overall intent of the Comprehensive Plan's land use element. Amending the zoning map is a legislative decision,

requiring a recommendation from the Planning Commission and City Council approval.

The community was notified of this proposal via the Planning Commission Agenda as well as a public notice of application and public hearing notice distributed via mail, newspaper, and posted on site and in City posting locations on June 16, 2026.

Staff recommends that the Planning Commission **accept** the proposed zoning map amendment and forward a **recommendation of approval** to City Council following the public hearing on July 6, 2026.

Next steps include the Planning Commission Public Hearing scheduled for July 6, 2026. The City Council will hold a work session for an initial review and then vote on the proposal in mid-July. Lastly, staff will put a Comprehensive Plan Map amendment on the annual docket for Planning Commission and City Council to review to bring the Comprehensive Plan into alignment with the proposed zoning delineation adjustments.

LINKS:

ATTACHMENTS:

1. Presentation
2. Existing Zoning Map
3. Proposed Site Map

CITY OF
MOUNTLAKE
TERRACE

CITY OF MOUNTLAKE TERRACE

Zoning Map Amendment

Planning Commission (Work Session): June 22, 2026

Sara Pizzo, AICP
Senior Planner, Community Development

PURPOSE

- Review a proposed zoning map amendment
- Respond to Planning Commission Questions
- Prepare to make a recommendation to City Council at the next meeting following a public hearing.

CITY OF MOUNTLAKE TERRACE

AGENDA

- Subject Summary
- Existing Zoning
- Vision 2044 Land Use Element
- Proposed Zoning
- Reasons for Rezone proposal
- Community Notification
- Staff Recommendation
- Next Steps

CITY OF MOUNTLAKE TERRACE

SUBJECT SUMMARY

- Land area: Two lots (95,731 square feet) located south of 236th St SW and east of Van Ry Blvd.
  - 6001 237th St SW
  - 5906 236th St SW
- Adopt updated zoning designations consistent with the Comprehensive Plan, Vision 2044
- Make minor adjustments to zoning delineation lines to match recently adjusted property lines.

CITY OF MOUNTLAKE TERRACE

SUBJECT SUMMARY

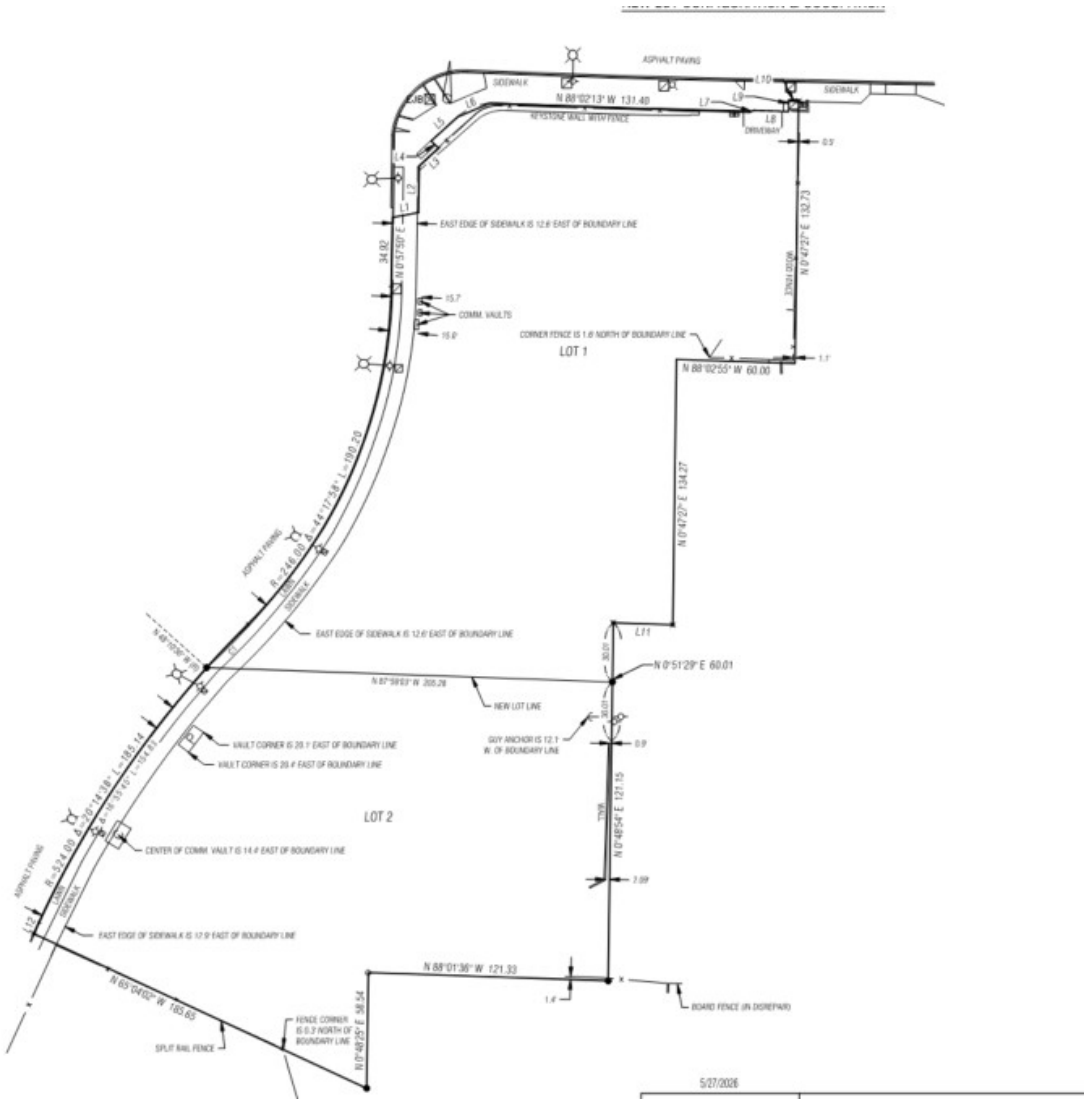

CITY OF MOUNTLAKE TERRACE

EXISTING ZONING MAP

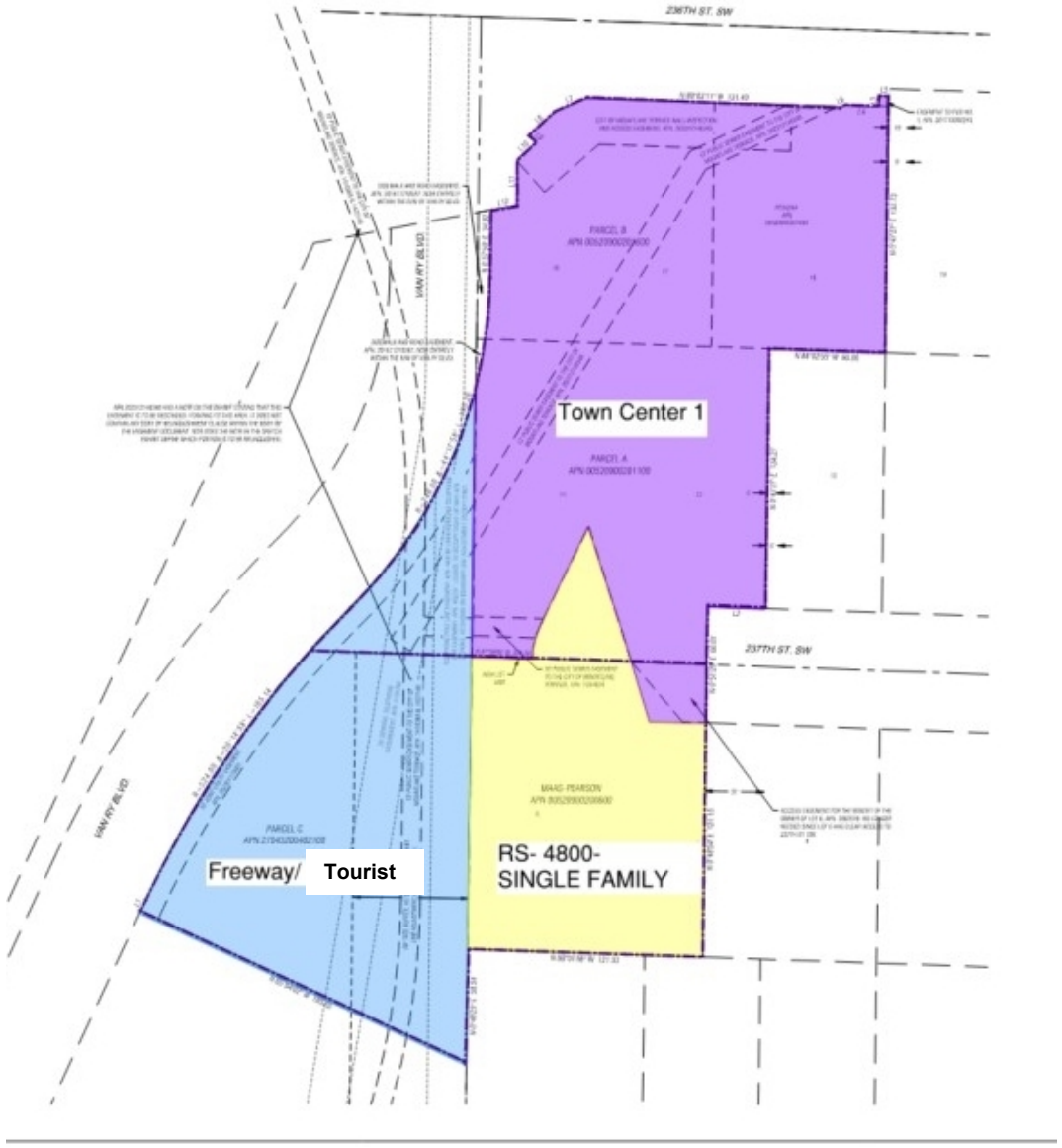

Existing Zones:

- Single-household residential (RS 4800) [yellow]
- Freeway/ Tourist (F/T) [blue]
- Town Center 1 (TC-1) [purple]

CITY OF MOUNTLAKE TERRACE

VISION 2044 LAND USE MAP

Current Land Use Designations:

- Neighborhood Mixed Use (NMU) [light purple]
- Gateway Mixed Use (GMU) [blue]
- Town Center 1 (TC-1) [dark purple]

CITY OF MOUNTLAKE TERRACE

VISION 2044 LAND USES

Purpose of Current Land Use Designations:

TOWN CENTER 1

The purpose of the Town Center 1 land use designation is to provide land for transit-oriented employment development in those Town Center areas closest to the light rail station. Professional office is the primary envisioned use followed by multifamily, and supportive and complementary retail commercial uses. These buildings will have a minimum height of 6 stories, and a maximum height of 12 stories.

NEIGHBORHOOD MIXED USE – The purpose of the Neighborhood Mixed Use land use designation is to provide land at efficient densities for multifamily residences and encouraging the development of mixed-use buildings with resident-oriented ground floor active uses to provide for the day-to-day needs of residents and the surrounding community. This designation encourages a clean and healthy environment, safety, walkability, neighborliness, affordability for a range of income levels, and convenient access to public transit, goods, and services. These buildings would have a maximum height of 4 to 6 stories, and these lots would serve as small commercial nodes in residential neighborhoods throughout the City, as a transitional zone between Residential land uses and higher intensity primarily commercial areas.

GATEWAY MIXED USE – The purpose of the Gateway Mixed Use land use designation is to provide land for commercial and multi-family mixed-use buildings with service-oriented non-residential uses (retail, restaurants, hotels, etc.), that serve the community, have more regionally scaled commercial uses and transit-oriented development, taking advantage of the proximity of I-5 and the Mountlake Terrace Light Rail Station. These buildings will have a minimum height of 6 stories, and a maximum height of 12 stories.

CITY OF MOUNTLAKE TERRACE

PROPOSED ZONING MAP

Adopt updated zoning designations consistent with the Comprehensive Plan, Vision 2044.

- Change RS 4800 to NMU
- Change F/T to GMU

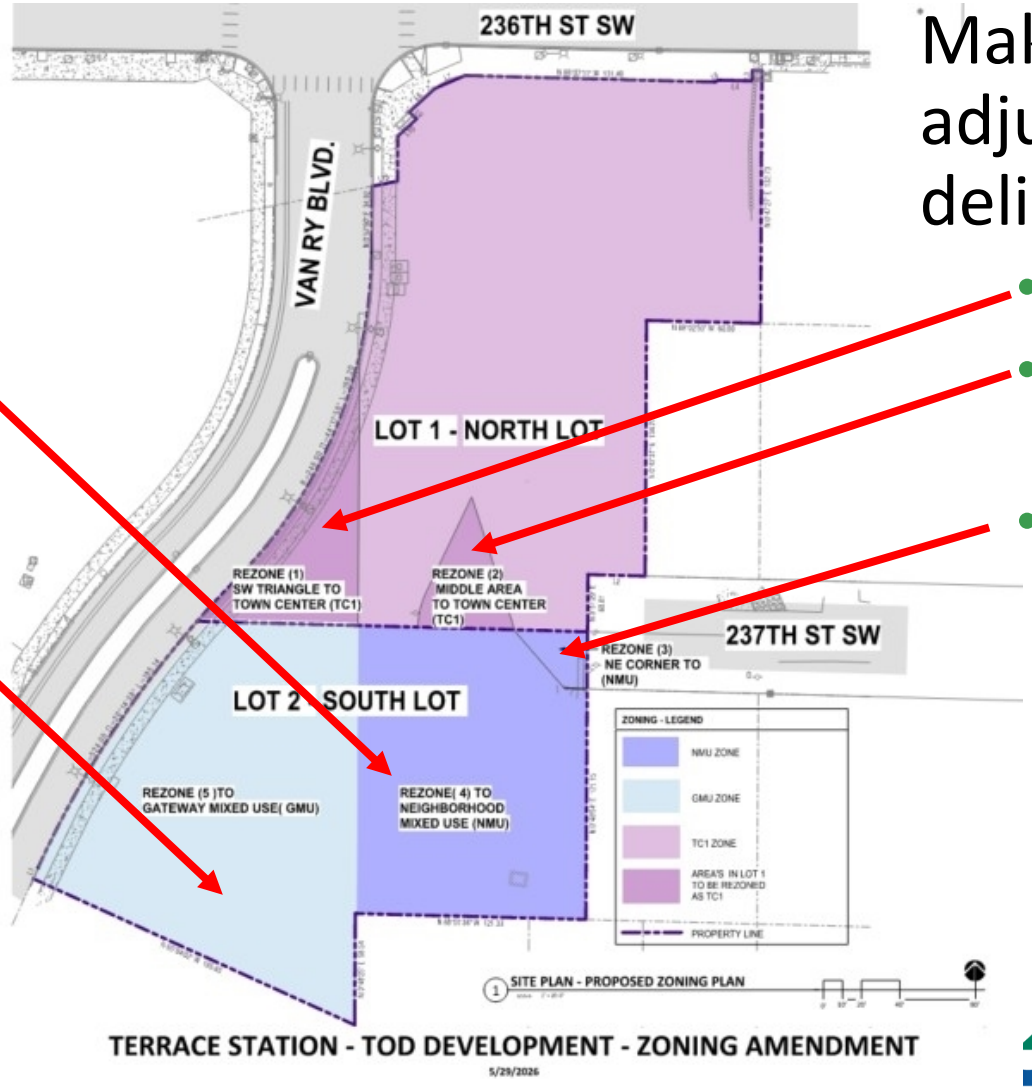

Make minor adjustments to zoning delineation lines

- Change F/T to TC-1
- Change RS 4800 to TC-1
- Change TC-1 to NMU

CITY OF MOUNTLAKE TERRACE

SIDE-BY-SIDE COMPARISON

EXISTING ZONING

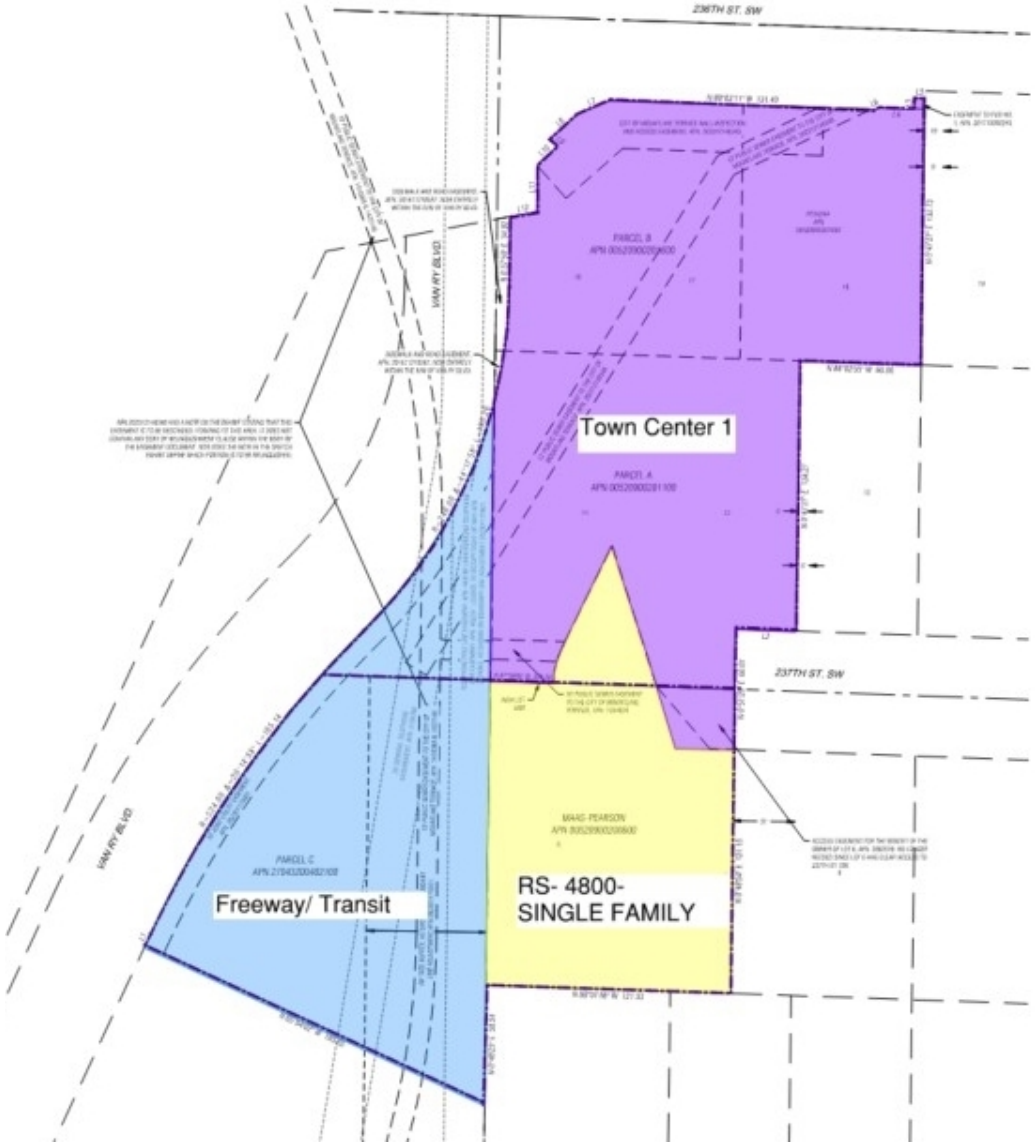

PROPOSED ZONING

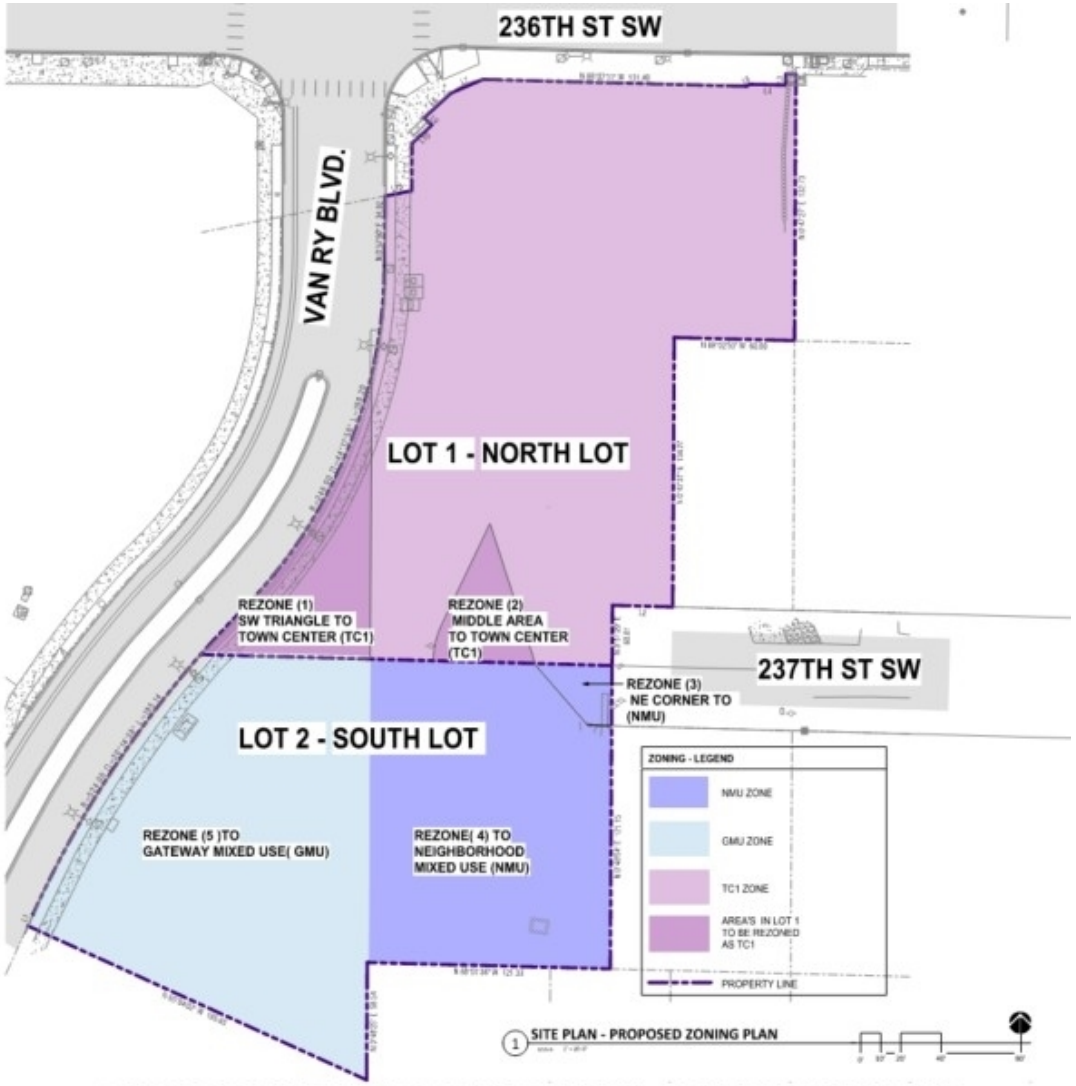

TERRACE STATION - TOD DEVELOPMENT - ZONING AMENDMENT

5/29/2026

WHY REZONE THIS AREA?

- The area contains two lots that Sierra Construction is interested in developing sooner than staff's timelines for updating the zoning map.
  - Terrace Station 4 is proposed on Lot 1 and is currently in review.
  - Terrace Station 5 (Lot 2) cannot be developed until the zoning map is updated from RS 4800 to NMU to align with Comprehensive Plan.
    - Pending Development Agreement sets development regulations for Terrace Station 5
- The existing zoning delineation lines create potential development constraints that can be removed through minor adjustments that do not impact the overall intent of the Comprehensive Plan's Land Use Element.

CITY OF MOUNTLAKE TERRACE

COMMUNITY NOTIFICATION

- Planning Commission Agenda – June 17, 2026

- Notice of Application & Public Hearing Notice – June 16, 2026 (Public Hearing is scheduled for July 6)
  - Mailed to nearby residents within 300 feet of project site
  - Posted on site and Civic locations
  - Newspaper

CITY OF MOUNTLAKE TERRACE

STAFF RECOMMENDATION

Staff recommends that the Planning Commission **accept** the proposed zoning map amendment and forward a **recommendation of approval** to City Council following the public hearing on July 6, 2026.

CITY OF MOUNTLAKE TERRACE

NEXT STEPS

- Public Hearing scheduled for July 6, 2026
- City Council Work Session and Meeting (Review and Vote) mid-July
- Staff will put a Comprehensive Plan Map amendment on the annual docket for Planning Commission and City Council to review to bring the Comprehensive Plan into alignment with the proposed zoning delineation adjustments.

CITY OF MOUNTLAKE TERRACE

DISCUSSION & QUESTIONS

CITY OF MOUNTLAKE TERRACE

Thank you

CITY OF
MOUNTLAKE
TERRACE

NW 1/4 SW 1/4 SEC. 33, NE 1/4 SE 1/4 SEC. 32 ALL IN TWP. 27N., RGE. 4E.

EXISTING ZONING MAP

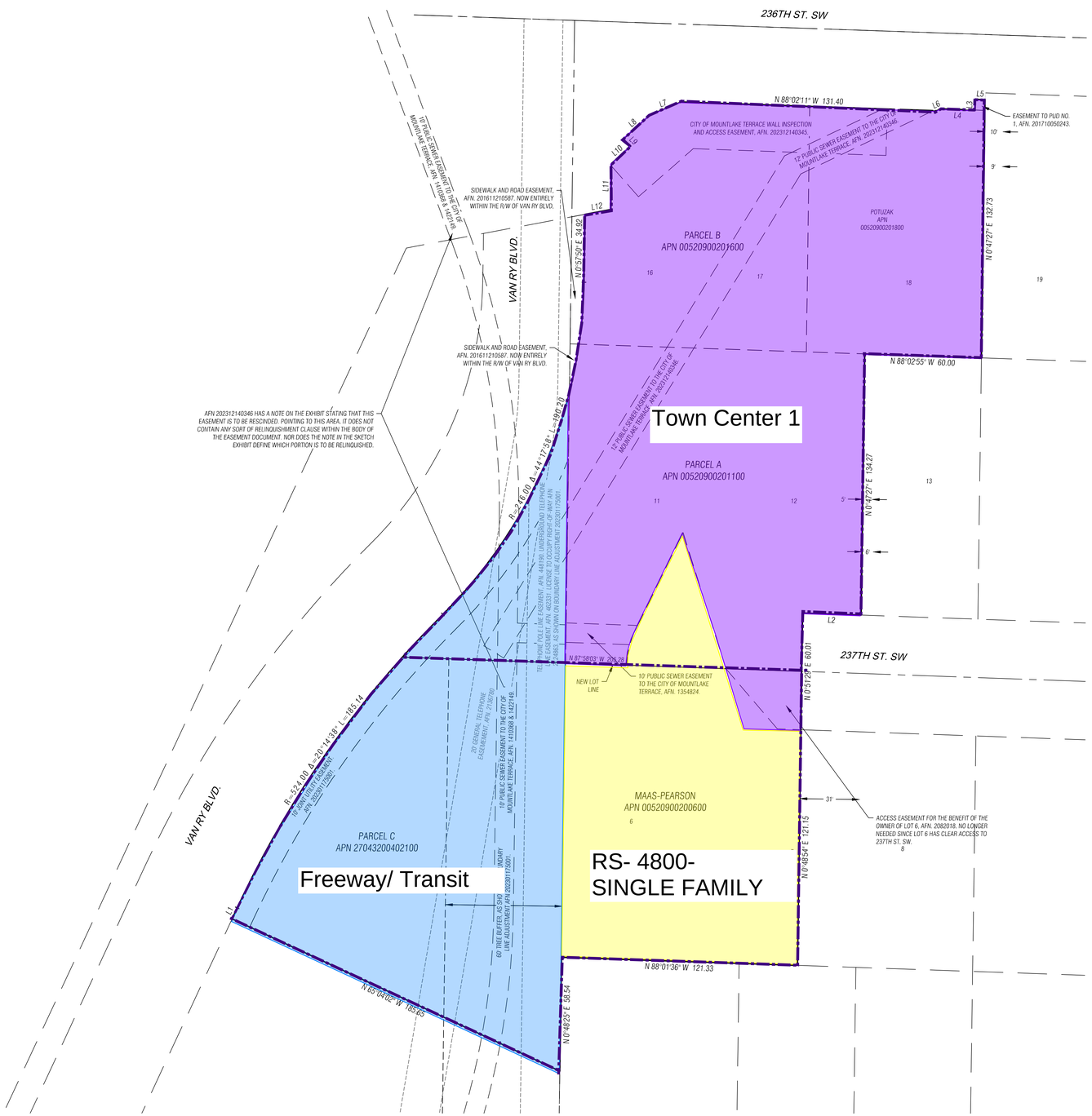

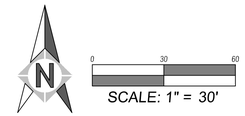

LEGAL DESCRIPTION

PARCEL A (ASSESSORS PARCEL NO. 00520900201100)

LOTS 11 AND 12, BLOCK 2, MOUNT-LAKE TERRACE DIVISION NO. 5, ACCORDING TO THE PLAT THEREOF RECORDED IN VOLUME 13 OF PLATS, PAGES 38 AND 39, RECORDS OF SNOHOMISH COUNTY, WASHINGTON;

TOGETHER WITH THAT PORTION OF VACATED 237TH STREET S.W. WHICH WOULD ATTACH BY OPERATION OF LAW;

EXCEPT THAT PORTION CONVEYED TO MRS. LOIS M. YOUNG BY DEED RECORDED UNDER RECORDING NO. 2082016 DESCRIBED AS FOLLOWS:

BEGINNING AT THE NORTHWEST CORNER OF LOT 8, MOUNT-LAKE TERRACE DIVISION NO. 5, ACCORDING TO THE PLAT THEREOF RECORDED IN VOLUME 13 OF PLATS, PAGES 38 AND 39, RECORDS OF SNOHOMISH COUNTY, WASHINGTON; THENCE NORTH 88°48'00" WEST, A DISTANCE OF 42.07; THENCE NORTH 41°21'14" WEST, A DISTANCE OF 40.730 FEET TO THE TRUE POINT OF BEGINNING OF THIS DESCRIPTION; THENCE NORTH 88°48'00" WEST, A DISTANCE OF 51.00 FEET TO A POINT ON A CURVE TO THE RIGHT, FROM WHICH POINT THE RADIUS POINT OF SAID CURVE BEARS SOUTH 88 ° 48'00" EAST, A DISTANCE OF 45.00 FEET; THENCE NORTHEASTERLY ALONG THE ARC OF SAID CURVE AN ARC DISTANCE OF 18.85 FEET; THENCE NORTH 25°12'00" EAST, A DISTANCE OF 55.64 FEET; THENCE SOUTH 18°18'00" EAST, A DISTANCE OF 73.34 FEET TO THE TRUE POINT OF BEGINNING;

TOGETHER WITH THAT PORTION OF VACATED 237TH STREET S.W. CONVEYED TO EDMONDS SCHOOL DISTRICT 15 BY DEED RECORDED UNDER RECORDING NO. 2082017, DESCRIBED AS FOLLOWS:

BEGINNING AT THE NORTHWEST CORNER OF LOT 8, MOUNT-LAKE TERRACE DIVISION NO. 5, ACCORDING TO THE PLAT THEREOF RECORDED IN VOLUME 13 OF PLATS, PAGES 38 AND 39, RECORDS OF SNOHOMISH COUNTY, WASHINGTON; THENCE NORTH 88°48'00" WEST, A DISTANCE OF 30.00 FEET TO THE TRUE POINT OF BEGINNING OF THIS DESCRIPTION; THENCE CONTINUING NORTH 88°48'00" WEST, A DISTANCE OF 12.07 FEET; THENCE NORTH 41°21'14" WEST, A DISTANCE OF 40.73 FEET; THENCE SOUTH 88°48'00" EAST, A DISTANCE OF 39.00 FEET; THENCE SOUTH 0°02'22" WEST, A DISTANCE OF 30.00 FEET TO THE TRUE POINT OF BEGINNING; EXCEPT THAT PORTION THEREOF, IF ANY, CONVEYED TO THE CITY OF MOUNTLAKE TERRACE BY DEED RECORDED UNDER RECORDING NO. 202103240514.

PARCEL B (ASSESSORS PARCEL NO. 00520900201600)

LOTS 16 AND 17, BLOCK 2, MOUNT-LAKE TERRACE DIVISION NO. 5, ACCORDING TO THE PLAT THEREOF RECORDED IN VOLUME 13 OF PLATS, PAGES 38 AND 39, RECORDS OF SNOHOMISH COUNTY, WASHINGTON;

EXCEPT THAT PORTION CONVEYED TO THE STATE OF WASHINGTON FOR PRIMARY STATE HIGHWAY NO. 1 BY DEED RECORDED UNDER RECORDING NO. 1475594;

AND ALSO EXCEPT THAT PORTION THEREOF, IF ANY, CONVEYED TO THE CITY OF MOUNTLAKE TERRACE BY DEED RECORDED UNDER RECORDING NO. 202103240514;

TOGETHER WITH THAT PORTION OF VACATED 236TH STREET SOUTHWEST THAT WOULD ATTACH TO SAID PREMISES BY OPERATION OF LAW AS VACATED UNDER CITY OF MOUNTLAKE TERRACE ORDINANCE NO. 2832, RECORDED UNDER RECORDING NO. 202312140344.

PARCEL C (ASSESSORS PARCEL NO. 27043200402100)

TRACT 2, BOUNDARY LINE ADJUSTMENT & RECORD OF SURVEY NO. PLL-22-0002, RECORDED UNDER RECORDING NO. 202301175001, RECORDS OF SNOHOMISH COUNTY, WASHINGTON; BEING A PORTION OF THE SOUTHEASTER QUARTER OF SECTION 32, AND A PORTION OF THE SOUTHWEST QUARTER OF SECTION 33, ALL IN TOWNSHIP 27 NORTH, RANGE 4 EAST, W.M., IN SNOHOMISH COUNTY, WASHINGTON.

POTUZAK (ASSESSORS PARCEL NO. 00520900201800)

LOT 18, BLOCK 2, MOUNT-LAKE TERRACE DIVISION NO. 5, ACCORDING TO THE PLAT THEREOF RECORDED IN VOLUME 13 OF PLATS, PAGES 38 AND 37, RECORDS OF SNOHOMISH COUNTY, WASHINGTON;

EXCEPT THAT PORTION CONVEYED TO THE STATE OF WASHINGTON BY DEED FILED UNDER RECORDING NO. 1476095.

AND EXCEPT FOR THAT PORTION CONVEYED TO THE CITY OF MOUNTLAKE TERRACE FOR RIGHT OF WAY BY DEED RECORDED UNDER RECORDING NUMBER 201710050219, RECORDS OF SNOHOMISH COUNTY, WASHINGTON.

MAAS/PEARSON
LOTS 6 AND 7, BLOCK 2, MOUNTLAKE TERRACE, DIVISION NO. 5, ACCORDING TO THE PLAT THEREOF RECORDED IN VOLUME 13 OF PLATS, PAGE 39, RECORDS OF SNOHOMISH COUNTY, WASHINGTON;

EXCEPT THE EAST 30 FEET OF SAID LOT 7;

EXCEPT THAT PORTION OF LOT 7 CONVEYED TO THE EDMONDS SCHOOL DISTRICT NO. 15 BY DEED RECORDED UNDER AUDITOR'S FILE NO. 2082017.

TOGETHER WITH THAT PORTION OF VACATED 237TH STREET SOUTHWEST BY THE CITY OF MOUNTLAKE TERRACE ORDINANCE RECORDED UNDER AUDITOR'S FILE NO. 8306010156 THAT WOULD ATTACH BY OPERATION OF LAW.

ALL SITUATE IN THE COUNTY OF SNOHOMISH, STATE OF WASHINGTON.

RESTRICTIONS OF RECORD

PER CHICAGO TITLE ORDER NOS. 252428-SC DATED 24, JULY 2025, 250121-SC DATED 15, JANUARY 2025 AND 500135439 DATED 1, JUNE 2022.

SUBJECT TO AN EASEMENT GRANTED TO THE CITY OF MOUNTLAKE TERRACE FOR SANITARY SEWERAGE, RECORDED UNDER AFN. 1354824. PLOTTED.

SUBJECT TO AN EASEMENT FOR INGRESS, EGRESS AND UTILITIES, RECORDED UNDER AFN. 2082018. PLOTTED.

SUBJECT TO RESERVATIONS, EASEMENTS OR OTHER MATTERS IN THE PROCEEDINGS OCCASIONING THE ABANDONMENT OR VACATION OF THE 237TH STREET S.W. RECORDED UNDER AFN. 8210180198 AND 8306010156.

SUBJECT TO THE COVENANTS, CONDITIONS, RESTRICTIONS, RECITALS, RESERVATIONS, EASEMENTS, EASEMENT PROVISIONS, ENCROACHMENTS, DEDICATIONS, BUILDING SETBACK LINES, NOTES, STATEMENTS, AND OTHER MATTERS, IF ANY AS SET FORTH ON PLAT OF MOUNT-LAKE TERRACE NO. 5 IN VOLUME 13 OF PLATS, PAGES 38-39, AFN 965233.

SUBJECT TO THE COVENANTS, CONDITIONS, RESTRICTIONS AND EASEMENTS BUT OMITTING ANY COVENANTS OR RESTRICTIONS, IF ANY AS SET FORTH IN THE DOCUMENT RECORDED UNDER AFN. 966942. DOCUMENT AMENDED UNDER AFNS. 972884, 975640, 1737440 AND 1737441.

SUBJECT TO THE RELINQUISHMENT OF ACCESS TO STATE HIGHWAY NUMBER 1 (SR 5) AND OF LIGHT, VIEW AND AIR BY DEED RECORDED UNDER AFN. 1498998.

SUBJECT TO THE RELINQUISHMENT OF ACCESS TO STATE HIGHWAY NUMBER 1 (SR 5) AND OF LIGHT, VIEW AND AIR BY DEED RECORDED UNDER AFN 1580907.

SUBJECT TO THE RELINQUISHMENT OF ACCESS TO STATE HIGHWAY NUMBER 1 (SR 5) AND OF LIGHT, VIEW AND AIR BY DEED RECORDED UNDER AFN. 1635341.

SUBJECT TO THE CONDEMNATION OF ACCESS TO STATE HIGHWAY NUMBER 1 (SR 5) AND OF LIGHT, VIEW AND AIR BY SNOHOMISH COUNTY SUPERIOR CASE CAUSE NUMBER: 135550.

SUBJECT TO AN EASEMENT GRANTED TO THE CITY OF MOUNTLAKE TERRACE TOD FOR PERMANENT SIDEWALK AND ROAD EASEMENT RECORDED UNDER AFN. 201611210587. PLOTTED.

SUBJECT TO AN EASEMENT TO THE CITY OF MOUNTLAKE TERRACE FOR SEWER UTILITY LINES AND APPURTENANCES RECORDED UNDER AFN. 202312140346, PLOTTED.

SUBJECT TO AN EASEMENT FOR SEWER RECORDED UNDER AFN. 1354813. DOES NOT AFFECT SUBJECT PROPERTY.

SUBJECT TO AN EASEMENT TO THE CITY OF MOUNTLAKE TERRACE FOR UNDERGROUND PIPELINES AND/OR MAINS FOR SANITARY SEWERAGE RECORDED UNDER AFN. 1410368. PLOTTED.

SUBJECT TO AN EASEMENT TO THE CITY OF MOUNTLAKE TERRACE FOR UNDERGROUND PIPELINES AND/OR MAINS FOR SANITARY SEWERAGE RECORDED UNDER AFN. 1422149. PLOTTED.

SUBJECT TO AN EASEMENT TO GENERAL TELEPHONE COMPANY OF THE NORTHWEST, INC. FOR COMMUNICATION SERVICE, POWER SERVICE, AND OTHER RELATED SERVICES RECORDED UNDER AFN. 2136780. PLOTTED.

SUBJECT TO THE COVENANTS, CONDITIONS, RESTRICTIONS, RECITALS, RESERVATIONS, EASEMENTS, EASEMENT PROVISIONS, ENCROACHMENTS,DEDICATIONS, BUILDING SETBACK LINES, NOTES, STATEMENTS, AND OTHER MATTERS, IF ANY, AS SET FORTH ON BOUNDARY LINE ADJUSTMENT & RECORD OF SURVEY RECORDING NO: 202301175001. PLOTTED

SUBJECT TO THE COVENANTS, CONDITIONS, RESTRICTIONS, RECITALS, RESERVATIONS, EASEMENTS, EASEMENT PROVISIONS, DEDICATIONS, BUILDING SETBACK LINES, NOTES, STATEMENTS, AND OTHER MATTERS, IF ANY, AS SET FORTH ON THE SURVEY RECORDED UNDER AFN. 9112025010.

SUBJECT TO AN EASEMENT TO PUBLIC UTILITY DISTRICT NO. 1 OF SNOHOMISH COUNTY FOR POWER DISTRIBUTION RECORDED UNDER AFN. 201710050243. PLOTTED.

TAG TABLE

TAG #	RADIUS	DIRECTION/ Δ	LENGTH
L1		N 24°53'39" E	6.24
L2		N 87°58'03" W	30.08
L3		N 00°48'51" E	5.50
L4		N 88°02'07" W	17.69
L5		N 88°02'13" W	5.00
L6		N 65°23'53" E	2.25
L7		N 67°15'31" E	17.45
L8		N 47°47'27" E	18.36
L9		N 46°41'49" W	5.25
L10		N 47°52'45" E	13.25
L11		N 00°52'29" E	23.69
L12		N 79°18'26" E	13.47

#	REVISION	DATE
1	REVISION TEXT GOES HERE	DATE
2		DATE
3		DATE
4		DATE
5		DATE
6		DATE

CHRISTOPHER SHANE HUNTER
STATE OF WASHINGTON
35145
PROFESSIONAL LAND SURVEYOR
4/23/2026

ATWELL
P.O. BOX 289, WOODINVILLE, WA 98072 | PHONE: (425) 486-1252 | WWW.ATWELL-GROUP.COM

VAN RY BLVD SITE
BOUNDARY & TOPOGRAPHIC SURVEY

SIERRA MLT LLC
14800 NE WOODINVILLE WAY
WOODINVILLE WA 98072

DRAWN BY:

REVIEWED BY:

JOB NO.
25003674

SHEET
1 OF 2

CONTACT INFORMATION

OWNER

WHISKEY 6 LLC
14800 NE NORTH WOODINVILLE WAY,
WOODINVILLE, WA 98072

SURVEYOR

SHANE BARNES
ASSOCIATE DIRECTOR
ATWELL, LLC
206.369.8260 MOBILE

GEOTECHNICAL

SIEW L. TAN, P.E.
PRINCIPAL GEOTECHNICAL ENGINEER
PANGEO ENGINEERING

3213 EASTLAKE AVENUE EAST, STE B
SEATTLE, WA 98102
TEL (206) 262-0370

CRITICAL AREA

BEN WOLLMAN, CERP
SENIOR STAFF SCIENTIST I ENVIRONMENTAL PLANNING
TERRACON
21905 64TH AVE W, STE 100, MOUNTLAKE TERRACE, WA 98043
W (425) 771 3304 I D (425) 361 0269 I M (508) 292 2630
BEN.WOLLMAN@TERRACON.COM I TERRACON.COM

ARCHITECT

LAVINA WADWANI
VEER ARCHITECTURE, PLLC
10655 NE 4TH ST, SUITE 707
BELLEVUE, WA 98004
lavinaw@veerarchitecture.com

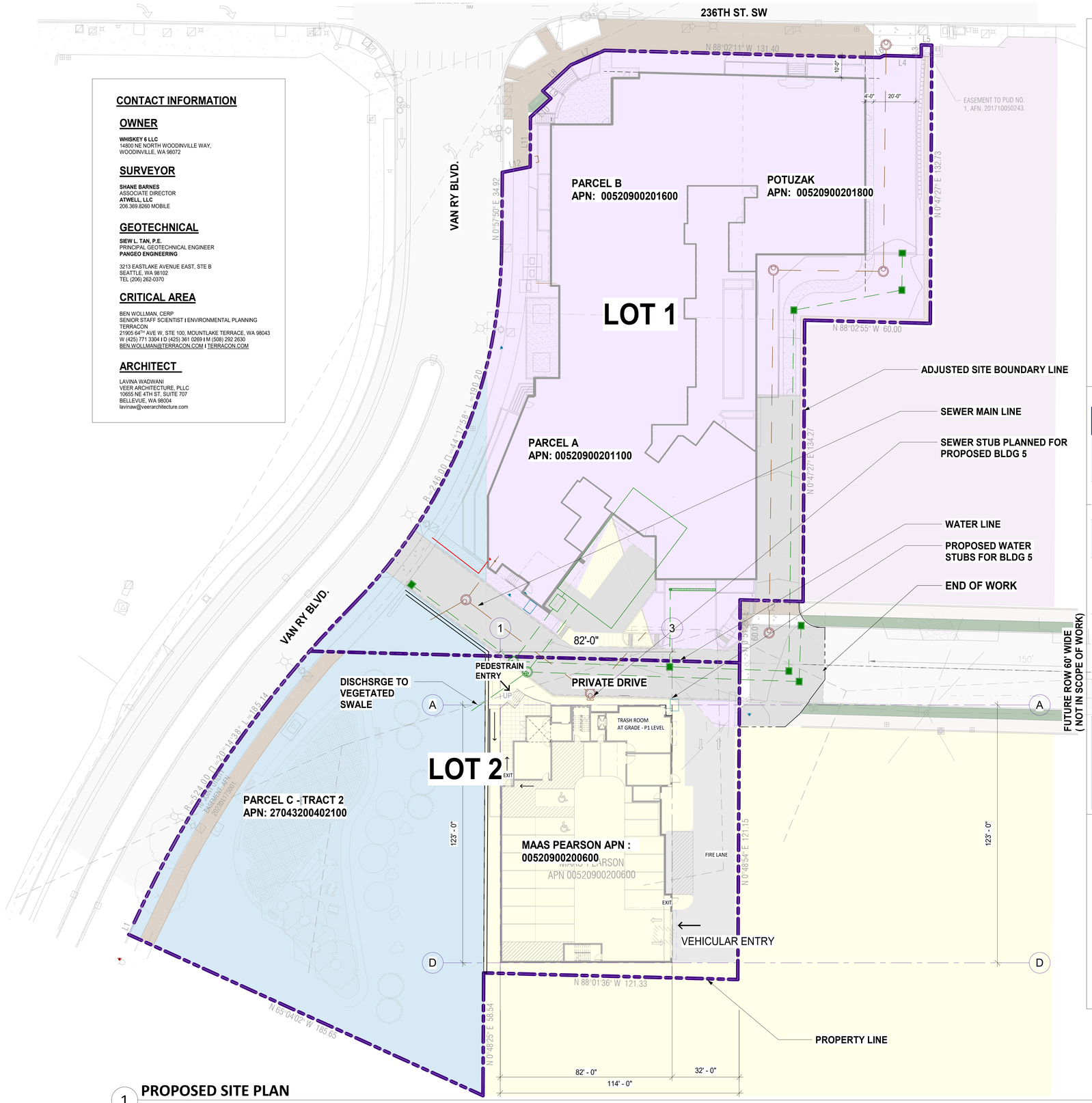

1 **PROPOSED SITE PLAN**
SCALE: 1" = 20'-0"

THIS APPLICATION IS SUBMITTED IN SUPPORT OF 5 CONCURRENT ZONING MAP AMENDMENT / REZONE APPLICATIONS ON LOT 1 & LOT 2 :

LOT 1 (NORTH LOT) = 53,182 SF - ZONING AMENDMENT TO REZONE

APN 00520900201100 PARCEL A - SW TRIANGULAR AREA	FREEWAY TRANSIT (FT)	REZONE TO	TC1 (TOWN CENTER)
APN 00520900201100 PARCEL A - MIDDLE TRIANGULAR AREA	SINGLE FAMILY (RS 4800)	REZONE TO	TC1 (TOWN CENTER)

LOT 2 (SOUTH LOT) = 42,549 SF - ZONING AMENDMENT TO REZONE

APN 00520900200600	SINGLE FAMILY (RS 4800)	REZONE TO	NMU (NEIGHBORHOOD MIXED USE)
APN 00520900201100 (NE CORNER - LOT2)	TOWN CENTER (TC1)	REZONE TO	NMU (NEIGHBORHOOD MIXED USE)
APN 27043200402100	FREEWAY TRANSIT (FT)	REZONE TO	GMU (GATEWAY MIXED USE)

BUILDING 4 - PROPOSED MULTIFAMILY WITH 223 UNITS & 136 PARKING STALLS ON LOT 1 PARCEL A, PARCEL B & POTUZAK
IT IS BEING REVIEWED UNDER SEPARATE PERMIT

BUILDING 5 - PROPOSED 6 STORY MULTIFAMILY INCLUDES 65 UNITS & 23 PARKING STALLS ON PARCEL # APN - 00520900200600 MAAS PEARSON - LOT 2 BEING PURSUED PER DEVELOPER's AGREEMENT BETWEEN DEVELOPER & CITY. IT ALSO REQUIRES ZONING AMENDMENT/ REZONE APPROVAL FROM CITY COUNCIL

REZONING SUMMARY TABLE

SITE DEVELOPMENT	Parcel / APN	Area	Current Zone	Proposed Zone	Proposed Use
LOT 1 — Building 4 (TC1 Footprint — No Rezone)	Parcels A & B POTUZAK APN 0052090020180	53,182 SF total (~1.22 ac)	TC1 (Town Center)	TC1 (No change)	7-story multifamily — 223 units (Building 4)
LOT 1 — Rezone 1 Middle Area (RS-4800 → TC1)	Parcel A- APN 00520900201100 (portion)	Within 53,182 SF Lot 1	RS-4800 (Single Family)	**TC1 (Rezone Required)**	Part of Lot 1 site — consolidated under TC1 for Building 4
LOT 1 — Rezone 2 SW Triangle (FT → TC1)	Parcel A - APN 00520900201100 (portion)	Within 53,182 SF Lot 1	FT (Freeway Tourist)	**TC1 (Rezone Required)**	Part of Lot 1 site — consolidated under TC1 for Building 4
LOT 2 — Rezone 3 NE Corner (TC1 → NMU)	Portion of Lot 2 NE Corner	Within ~42,549 SF Lot 2	TC1 (Town Center)	**NMU (Rezone Required)**	Transitional NMU designation for NE portion of Lot 2 consistent with 2024 Comprehensive Plan
LOT 2 — Rezone 4 42,549 SF Building 5 — MAAS Pearson (RS-4800 → NMU)	APN 00520900200600	~0.45 ac	RS-4800 (Single Family)	**NMU (Rezone Required)**	6-story multifamily 65 units; subject to developer agreement & city council approval – zoning
LOT 2 — Rezone 5 Community Park (Tract 2 / Parcel C)	APN 27043200402100	~0.66 ac	FT (Freeway Tourist)	**GMU (Rezone Required)**	Landscaped open space / greenway
TOTAL SITE	2 LOTS	~2.21 ac	TC1 / RS-4800 / FT (Lot 1) + TC1 / RS-4800 / FT (Lot 2)	5 Rezones: (1) FT→TC1 (2) RS-4800→TC1 (3) TC1→NMU (4) RS-4800→NMU (5) FT→GMU	**288 units + open space**

LEGEND

- RS - 4800
- TC-1 ZONE
- FT ZONE
- ROAD / DRIVEWAY

PROPOSED DEVELOPMENT BUILDING 4 & 5 IS GREYED OUT

0' 10' 20' 40' 80'

TERRACE STATION - TOD DEVELOPMENT - ZONING AMENDMENT

5/29/2026

veer ARCHITECTURE PLLC

Item: 6.b.

CITY OF MOUNTLAKE TERRACE

PLANNING COMMISSION STAFF REPORT

FROM: Sara Pizzo, Senior Planner
DATE: June 22, 2026
SUBJECT: Terrace Station 5 Development Agreement (work session)

SUBJECT SUMMARY:

The property owners of 6001 237th St SW are proposing to redevelop the property through a development agreement. The proposal includes a multifamily residential building containing 65 units, known as Terrace Station 5. The project site is located east of Van Ry Blvd, south of 237th St, and north of 237th St.

BACKGROUND / ANALYSIS:

The Comprehensive Plan land use destination for the site is split between Neighborhood Mixed Use and Gateway Mixed Use. The current zoning for the site is R-2/RS 4800 and Freeway Tourist. The building footprint is currently located in R-2/RS 4800. The area to the west is currently zoned Freeway/Tourist and is proposed as open space to serve the development's residents. There is a concurrent proposal before Planning Commission to rezone the site to align with the Comprehensive Plan. Doing so will allow construction of a multi-household residential building where proposed. However, the City has not yet adopted zoning regulations for Neighborhood Mixed used zones. The proposed development agreement will allow the City to regulate the development of Terrace Station 5 before the zoning regulations are adopted city-wide for the Neighborhood Mixed Use zone.

Per the Comprehensive Plan, Vision 2044, the Neighborhood Mixed Use designation is "to provide land at efficient densities for multifamily residences and encouraging the development of mixed-use buildings with resident-oriented ground floor active uses to provide for the day-to-day needs of residents and the surrounding community." Vision 2044 states that buildings would have a maximum height of four to six stories and serve as a traditional zone between residential land uses and higher intensity primarily commercial areas. The proposed development is a 65-unit multi-household residential building. The agreement limits the building height to six stories. Therefore, the land use and height align with the Comprehensive Plan Neighborhood Mixed Use vision for the site. The Comprehensive Plan does not provide further direction on how developments are to be regulated, as this will be determined through zoning regulations that have yet to be adopted by the City.

Given the proposed development's proximity to Town Center, the development agreement applies Town Center zoning regulations (MTMC 19.50) and design standards (MTMC 19.123)

to Terrace Station 5, except for use and building height, which align with the Comprehensive Plan, described above. Town Center requirements include block frontage standards, setbacks, parking, open space, and site and building design. The development will also be subject to frontage improvements per the Engineering Development Manual, potential traffic improvements depending on results of a Traffic Impact Analysis, and the City's required tree removal and replacement requirements. The Mountlake Terrace Municipal Code will apply to the development unless specifically set forth otherwise in the agreement.

The agreement also includes additional terms that will provide public benefit. These items include vinyl art wraps for utility projects adjacent to the project, pedestrian scale street lighting along Van Ry Blvd. (if needed determined by a photometric lighting study), and public-facing artwork in the shared open space west of the building.

The agreement is valid for 10 years, which is typical for development agreements. The agreement, however, identifies various permitting steps that need to be completed within that timeline to ensure continued progress on the project. The land use application is required to be submitted by July 2028, civil and building permits are due by July 2029. Substantial progress on construction as determined by the Director is required by July 2031. The agreement terminates in July 2036.

Community notification includes the Planning Commission agenda for the June 22, 2026 meeting. A Notice of Application/Notice of Public Hearing was mailed to nearby residents, posted in the newspaper, and posted at City posting site locations on June 16, 2026 ahead of the July 6, 2026 public hearing.

Staff recommends that the Planning Commission accept the proposed development agreement and forward a recommendation of approval to City Council.

LINKS:

ATTACHMENTS:

1. Presentation
2. Exhibit A
3. Exhibit B
4. Exhibit C
5. Development Agreement

CITY OF
MOUNTLAKE
TERRACE

CITY OF MOUNTLAKE TERRACE

Development Agreement Terrace Station 5

Planning Commission (Work Session): June 22, 2026

Sara Pizzo, Senior Planner, Community Development

PURPOSE

- Review development agreement terms for a new multifamily development (Terrace Station 5)
- Respond to Planning Commission Questions
- Prepare to make a recommendation to City Council at the next meeting following a public hearing.

CITY OF MOUNTLAKE TERRACE

AGENDA

- Subject Summary
- Vision 2044 Land Use Element
- Project Description Overview
- Standards and Requirements
- Timelines
- Community Notification
- Staff Recommendation
- Next Steps

CITY OF MOUNTLAKE TERRACE

SUBJECT SUMMARY

Terrace Station 5 Development Agreement

- **Location:** 6001 237th St SW
- **Land area:** 42,549 square feet
- **Vision 2044 Land Use Designation:** Neighborhood Mixed Use & Gateway Mixed Use
- **Zoning Map Designation:** Preposed rezone to Neighborhood Mixed Use
- **Proposal:** Develop a 65-unit multi-family residential development through a development agreement
  - Align with Neighborhood Mixed Use land use designation vision
  - Apply Town Center zoning regulations and design standards
- **Reason:** NMU zoning regulations have not yet been adopted by the City and the applicant would like to begin a development project on this site.

CITY OF MOUNTLAKE TERRACE

SUBJECT SUMMARY

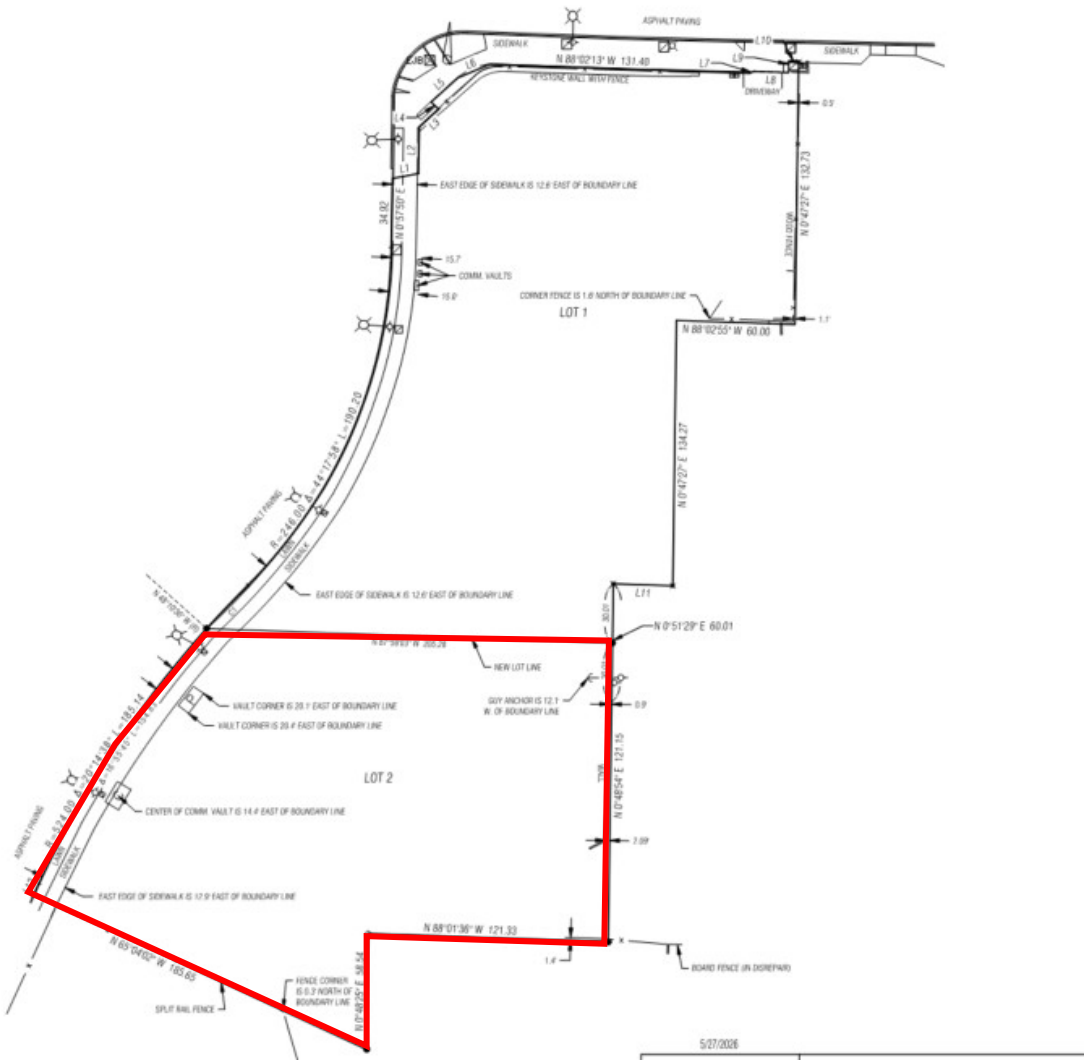

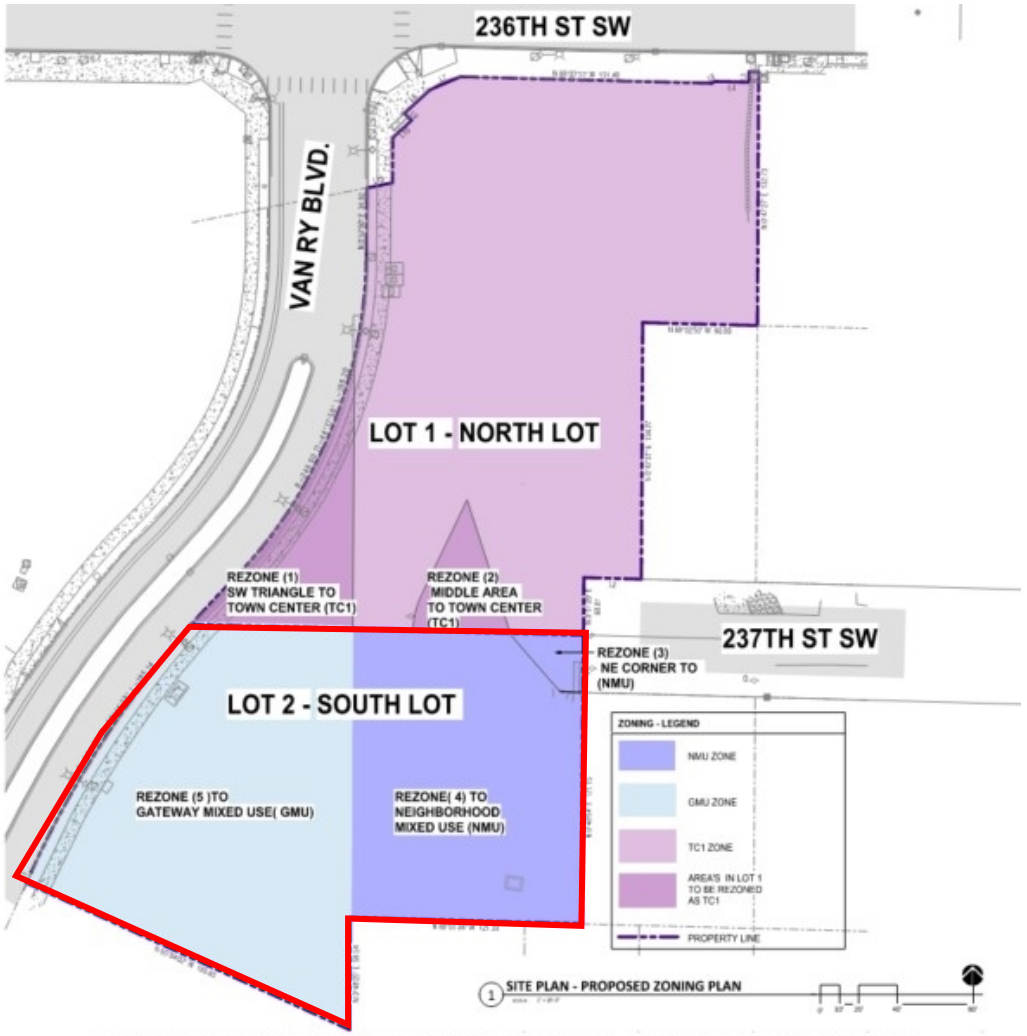

TERRACE STATION - TOD DEVELOPMENT - ZONING AMENDMENT

5/29/2026

VISION 2044

NEIGHBORHOOD MIXED USE – The purpose of the Neighborhood Mixed Use land use designation is to provide land at efficient densities for multifamily residences and encouraging the development of mixed-use buildings with resident-oriented ground floor active uses to provide for the day-to-day needs of residents and the surrounding community. This designation encourages a clean and healthy environment, safety, walkability, neighborliness, affordability for a range of income levels, and convenient access to public transit, goods, and services. These buildings would have a maximum height of 4 to 6 stories, and these lots would serve as small commercial nodes in residential neighborhoods throughout the City, as a transitional zone between Residential land uses and higher intensity primarily commercial areas.

CITY OF MOUNTLAKE TERRACE

PROJECT DESCRIPTION OVERVIEW

Terrace Station 5

- Multi-family Residential Use
  - 65 units
  - 6 stories
- Shared Open Space with landscaping, artwork, and recreational or leisure amenities for residents.
- Access via private drive between Van Ry Blvd. and 237th St SW.

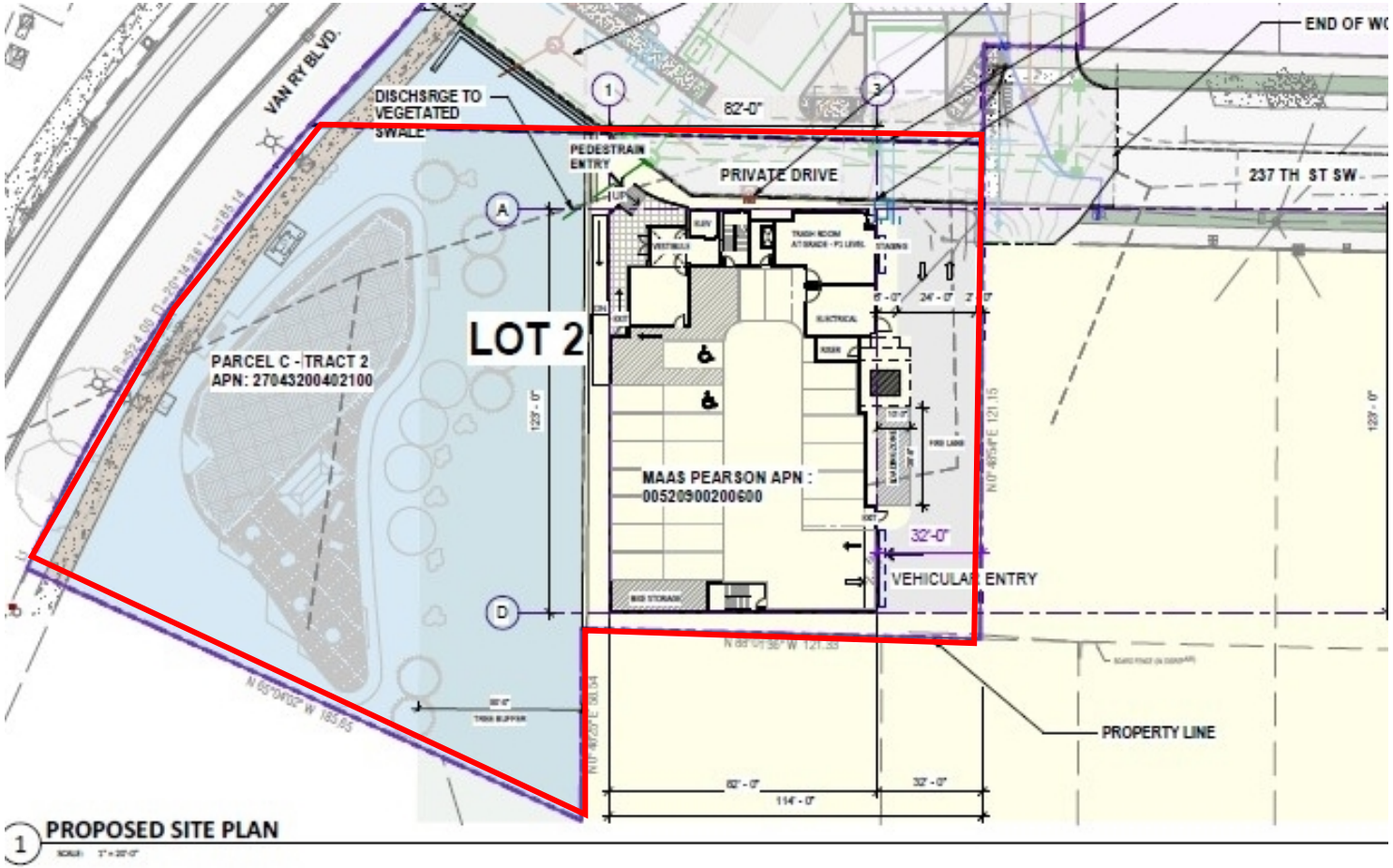

CITY OF MOUNTLAKE TERRACE

ZONING STANDARDS

Figure 19.123.100(A)

Landscaped frontage vision and key standards.

Land Use

- Multi-household residential

Building Height

- 6 stories

Town Center Setbacks and Frontage

- Landscape block frontage standards including 10-foot setback (from Van Ry Blvd.
- Side and Rear yard setbacks: 5 feet

CITY OF MOUNTLAKE TERRACE

PARKING

Town Center Parking

- Tier 1 parking standards required
- 25% Parking reduction with Transportation Demand Management Programs (TDM)
  - vanpools, fleet ride, subscription bus, regular transit subsidy, carpooling
- Tandem parking spaces are allowed with an approved parking management plan approved by the Director

Figure 19.50.090(A)

Map of Town Center Parking Tiers

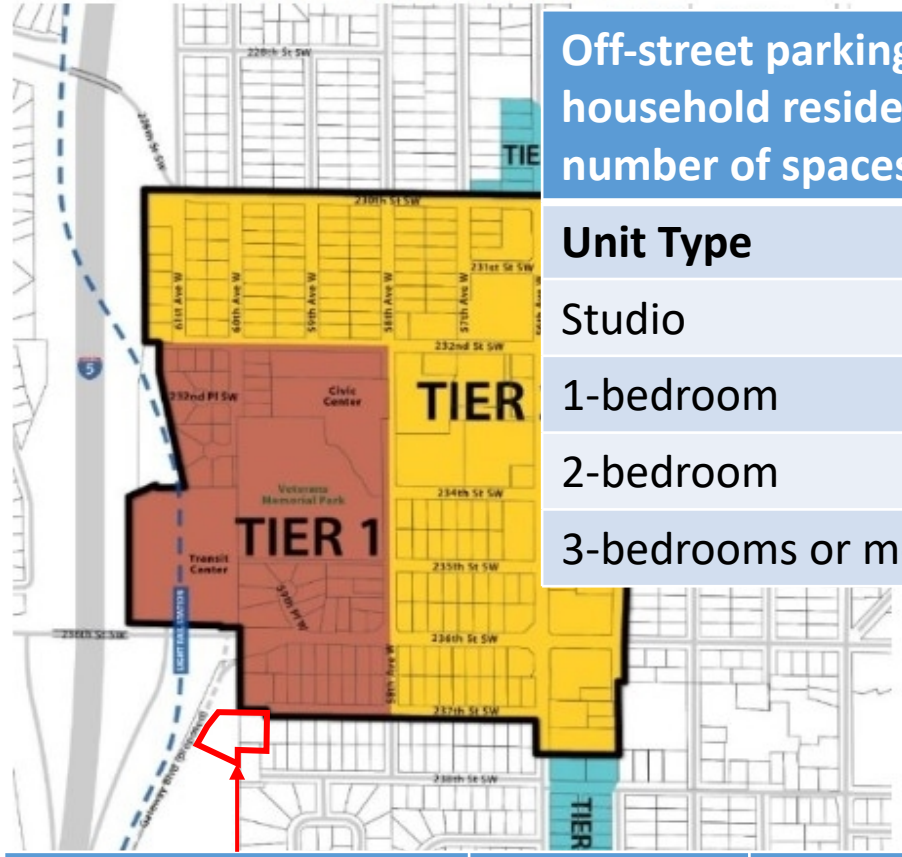

Off-street parking standards for multi-household residential uses (minimum number of spaces/dwelling)	
Unit Type	**Tier 1 requirement**
Studio	0.50
1-bedroom	0.75
2-bedroom	1.0
3-bedrooms or more	1.25

Terrace Station 5		
Unit Type	**Quantity**	**Parking Requirement**
Studio	60	30 spaces
1-bedroom	5	4 spaces
		34 spaces TOTAL
25% reduction with TDM programs		**26 spaces TOTAL**

OPEN SPACE

Comply with Town Center Open Space Requirements

- 100 square feet per studio and 1- bedroom dwellings (6,500 square feet total as proposed)
- Can be provided through a combination of options:
  - Shared open Space
  - Ground-level individual outdoor open space
  - Balconies
  - Common indoor recreation areas
  - Shared roof decks
- Contains landscaping and usable amenities for recreation or leisure
- Maintained by the property owner

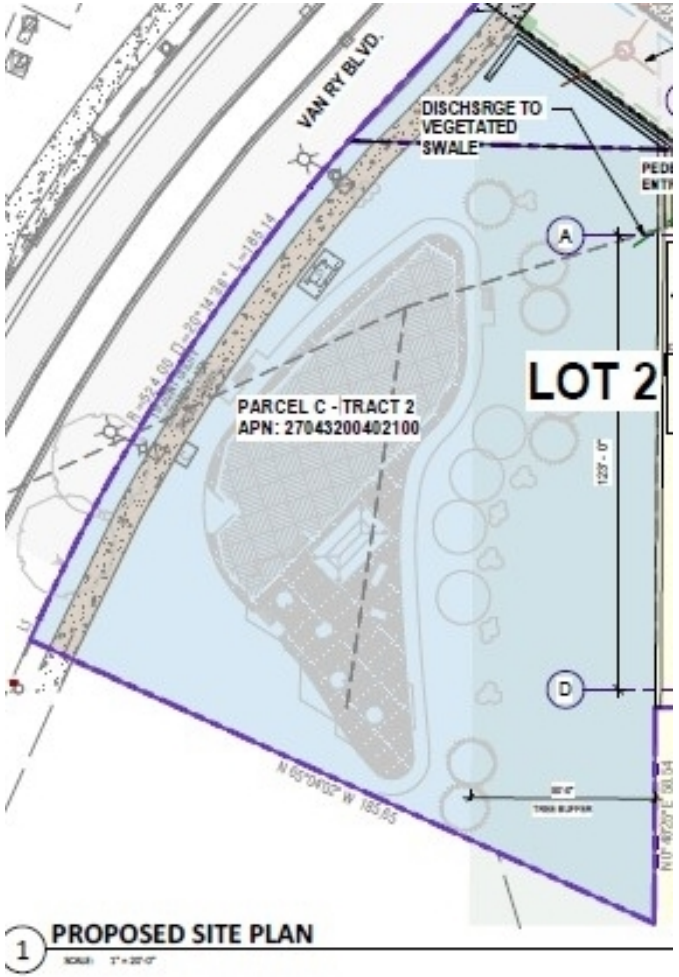

CITY OF MOUNTLAKE TERRACE

PUBLIC IMPROVEMENTS

- Frontage improvements required at the end of the public portion of 237th St SW
- Traffic Impact Analysis required to analyze vehicle turning movements and detail any required traffic improvements

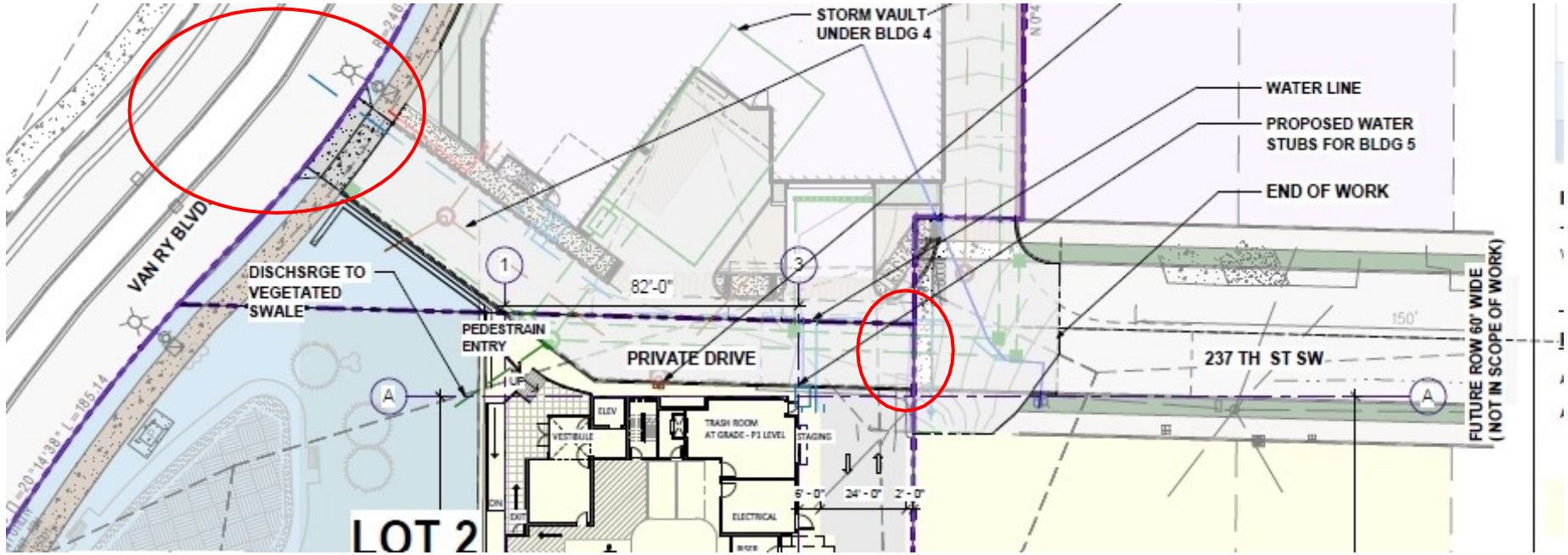

CITY OF MOUNTLAKE TERRACE

ACCESS AND EASEMENTS

- A private drive will provide access to Terrace Station 5
- Private drive will serve as a fire lane
- Public vehicle access easement required
- Public pedestrian access easement required

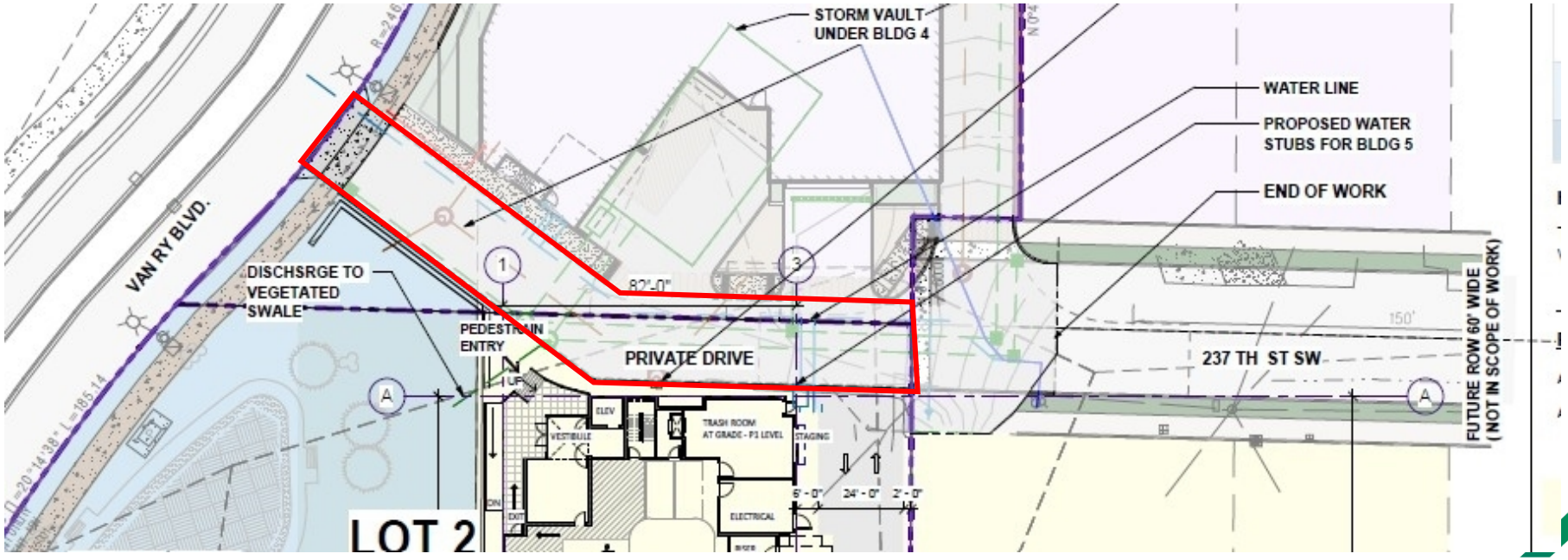

CITY OF MOUNTLAKE TERRACE

ADDITIONAL TERMS

- Unless specified in the agreement, all Mountlake Terrace Municipal codes apply as stated in code.
- Developer is required to cover utility boxes adjacent to the project with vinyl art wraps.
- Pedestrian scale lighting is required along Van Ry Blvd if photometric design concludes existing street lighting is insignificant.
- Developer is required to provide one or more public artwork installations within the shared open space
  - Total cost is at least 1% of constructions costs not to exceed $100,000.

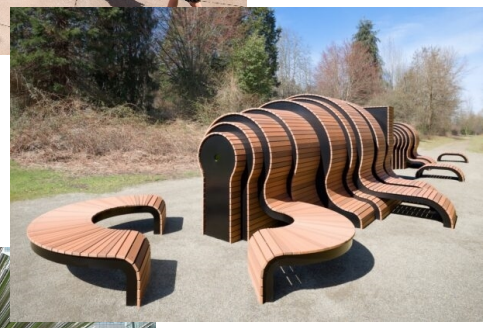

CITY OF MOUNTLAKE TERRACE

TIMELINES

July 2028	Land use applications due
July 2029	Civil permit applications due
July 2029	Building Permit applications due
July 2031	Substantial construction progress
July 2036	Agreement terminates

Conceptual Terrace Station 5 Rendering

CITY OF MOUNTLAKE TERRACE

COMMUNITY NOTIFICATION

- Planning Commission Agenda – June 17, 2026

- Notice of Application & Public Hearing Notice – June 16, 2026 (Public Hearing is scheduled for July 6)
  - Mailed to nearby residents within 300 feet of project site
  - Posted on site and Civic locations
  - Newspaper

CITY OF MOUNTLAKE TERRACE

STAFF RECOMMENDATION

Staff recommends that the Planning Commission **accept** the proposed development agreement and forward a **recommendation of approval** to City Council.

CITY OF MOUNTLAKE TERRACE

NEXT STEPS

- Public Hearing scheduled for July 6, 2026
- City Council Work Session and Meeting (Review and Vote) mid-July
- Applicant applies for land use, civil, and building permit applications for Terrace Station 5 (requires administrative review and approval)

CITY OF MOUNTLAKE TERRACE

DISCUSSION & QUESTIONS

CITY OF MOUNTLAKE TERRACE

Thank you

CITY OF
MOUNTLAKE
TERRACE

NW1/4 SW1/4, SEC.33, TWP. 27N, RGE.4E, W.M.
NE1/4 SE1/4, SEC.32, TWP. 27N, RGE.4E, W.M.
CITY OF MOUNTLAKE TERRACE, SNOHOMISH COUNTY, WASHINGTON

OWNER'S DECLARATION

KNOW ALL PEOPLE BY THESE PRESENTS THAT THE UNDERSIGNED OWNER OF THE LAND HEREIN DESCRIBED DOES HEREBY MAKE A BOUNDARY LINE ADJUSTMENT THEREOF, AND DECLARES THIS DOCUMENT TO BE THE GRAPHIC REPRESENTATION OF THE SAME, AND THAT SAID ADJUSTMENT IS MADE WITH THE FREE CONSENT AND IN ACCORDANCE WITH THE DESIRE OF THE OWNER.

IN WITNESS WHEREOF WE HAVE SET OUR HANDS AND SEALS.

WHISKEY 6, LLC, A WASHINGTON LIMITED LIABILITY COMPANY

BY: Roger Collins

NAME: ROGER COLLINS

TITLE: MANAGER

ACKNOWLEDGEMENT

STATE OF WASHINGTON)
)
COUNTY OF King)

I CERTIFY THAT I KNOW OR HAVE SATISFACTORY EVIDENCE THAT ROGER COLLINS IS THE PERSON WHO APPEARED BEFORE ME, AND SAID PERSON ACKNOWLEDGED THAT (HE/SHE) SIGNED THIS INSTRUMENT, ON OATH STATED THAT (HE/SHE) WAS AUTHORIZED TO EXECUTE THE INSTRUMENT AND ACKNOWLEDGED IT AS THE Manager OF WHISKEY 6, LLC TO BE THE FREE AND VOLUNTARY ACT OF SUCH PARTY FOR THE USES AND PURPOSES MENTIONED IN THE INSTRUMENT.

DATED 6/4/2026

KATELYN MCNEELY NOTARY My Comm. Expires December 9, 2027 No.157088 PUBLIC STATE OF WASHINGTON

Katelyn McNeely
SIGNATURE OF NOTARY PUBLIC

MY APPOINTMENT EXPIRES 12/9/2027

COMMUNITY AND ECONOMIC DEVELOPMENT DIRECTOR'S APPROVAL

THIS BOUNDARY LINE ADJUSTMENT COMPLIES WITH ALL REQUIREMENTS OF TITLE 17 OF THE MOUNTLAKE TERRACE MUNICIPAL CODE AND ALL REQUIRED IMPROVEMENTS ASSOCIATED WITH THIS BOUNDARY LINE ADJUSTMENT HAVE BEEN INSTALLED OR OTHERWISE SECURED THROUGH A BOND OR OTHER SECURITY ACCEPTABLE TO THE CITY THROUGH A SUBDIVISION IMPROVEMENT AGREEMENT.

EXAMINED AND APPROVED BY ME THIS 9th DAY OF June, 2026

COMMUNITY AND ECONOMIC DEVELOPMENT DIRECTOR

TREASURER'S CERTIFICATE

I HEREBY CERTIFY THAT ALL STATE AND COUNTY TAXES HERETOFORE LEVIED AGAINST THE PROPERTY DESCRIBED HEREIN, ACCORDING TO THE BOOKS AND RECORDS OF MY OFFICE, HAVE BEEN FULLY PAID AND DISCHARGED, INCLUDING 2026 TAXES.

BY: Brian Sullivan 6/16/2026
TREASURER, SNOHOMISH COUNTY DATE

BY: Roz Ammon 6/16/2026
DEPUTY COUNTY TREASURER DATE

RECORD LEGAL DESCRIPTIONS

PARCEL A (ASSESSORS PARCEL NO. 00520900201100)
LOTS 11 AND 12, BLOCK 2, MOUNT-LAKE TERRACE DIVISION NO. 5, ACCORDING TO THE PLAT THEREOF RECORDED IN VOLUME 13 OF PLATS, PAGES 38 AND 39, RECORDS OF SNOHOMISH COUNTY, WASHINGTON;

TOGETHER WITH THAT PORTION OF VACATED 237TH STREET S.W. WHICH WOULD ATTACH BY OPERATION OF LAW;

EXCEPT THAT PORTION CONVEYED TO MRS. LOIS M. YOUNG BY DEED RECORDED UNDER RECORDING NUMBER 2082016 DESCRIBED AS FOLLOWS:

BEGINNING AT THE NORTHWEST CORNER OF LOT 8, MOUNT-LAKE TERRACE DIVISION NO. 5, ACCORDING TO THE PLAT THEREOF RECORDED IN VOLUME 13 OF PLATS, PAGES 38 AND 39, RECORDS OF SNOHOMISH COUNTY, WASHINGTON;
THENCE NORTH 88°48'00" WEST, A DISTANCE OF 42.07;
THENCE NORTH 41°21'14" WEST, A DISTANCE OF 40.730 FEET TO THE TRUE POINT OF BEGINNING OF THIS DESCRIPTION;
THENCE NORTH 88°48'00" WEST, A DISTANCE OF 51.00 FEET TO A POINT ON A CURVE TO THE RIGHT, FROM WHICH POINT THE RADIUS POINT OF SAID CURVE BEARS SOUTH 88 ° 48'00" EAST, A DISTANCE OF 45.00 FEET;
THENCE NORTHEASTERLY ALONG THE ARC OF SAID CURVE AN ARC DISTANCE OF 18.85 FEET;
THENCE NORTH 25°12'00" EAST, A DISTANCE OF 55.64 FEET;
THENCE SOUTH 18°18'00" EAST, A DISTANCE OF 73.34 FEET TO THE TRUE POINT OF BEGINNING;
TOGETHER WITH THAT PORTION OF VACATED 237TH STREET S.W. CONVEYED TO EDMONDS SCHOOL DISTRICT 15 BY DEED RECORDED UNDER RECORDING NUMBER 2082017, DESCRIBED AS FOLLOWS:

BEGINNING AT THE NORTHWEST CORNER OF LOT 8, MOUNT-LAKE TERRACE DIVISION NO. 5, ACCORDING TO THE PLAT THEREOF RECORDED IN VOLUME 13 OF PLATS, PAGES 38 AND 39, RECORDS OF SNOHOMISH COUNTY, WASHINGTON;
THENCE NORTH 88°48'00" WEST, A DISTANCE OF 30.00 FEET TO THE TRUE POINT OF BEGINNING OF THIS DESCRIPTION;
THENCE CONTINUING NORTH 88°48'00" WEST, A DISTANCE OF 12.07 FEET;
THENCE NORTH 41°21'14" WEST, A DISTANCE OF 40.73 FEET;
THENCE SOUTH 88°48'00" EAST, A DISTANCE OF 39.00 FEET;
THENCE SOUTH 00°02'22" WEST, A DISTANCE OF 30.00 FEET TO THE TRUE POINT OF BEGINNING;
EXCEPT THAT PORTION THEREOF, IF ANY, CONVEYED TO THE CITY OF MOUNTLAKE TERRACE BY DEED RECORDED UNDER RECORDING NUMBER 202103240514.

PARCEL B (ASSESSORS PARCEL NO. 00520900201600)
LOTS 16 AND 17, BLOCK 2, MOUNT-LAKE TERRACE DIVISION NO. 5, ACCORDING TO THE PLAT THEREOF RECORDED IN VOLUME 13 OF PLATS, PAGES 38 AND 39, RECORDS OF SNOHOMISH COUNTY, WASHINGTON;

EXCEPT THAT PORTION CONVEYED TO THE STATE OF WASHINGTON FOR PRIMARY STATE HIGHWAY NO. 1 BY DEED RECORDED UNDER RECORDING NUMBER 1475594;

AND EXCEPT THAT PORTION THEREOF, IF ANY, CONVEYED TO THE CITY OF MOUNTLAKE TERRACE BY DEED RECORDED UNDER RECORDING NUMBER 202103240514;

TOGETHER WITH THAT PORTION OF VACATED 236TH STREET SOUTHWEST THAT WOULD ATTACH TO SAID PREMISES BY OPERATION OF LAW AS VACATED UNDER CITY OF MOUNTLAKE TERRACE ORDINANCE NO. 2832, RECORDED UNDER RECORDING NUMBER 202312140344.

PARCEL C (ASSESSORS PARCEL NO. 27043200402100)
TRACT 2, CITY OF MOUNTLAKE TERRACE BOUNDARY LINE ADJUSTMENT NO. PLL-22-0002, RECORDED UNDER RECORDING NUMBER 202301175001, RECORDS OF SNOHOMISH COUNTY, WASHINGTON, BEING A PORTION OF THE SOUTHEAST QUARTER OF SECTION 32, AND A PORTION OF THE SOUTHWEST QUARTER OF SECTION 33, ALL IN TOWNSHIP 27 NORTH, RANGE 4 EAST, W.M., IN SNOHOMISH COUNTY, WASHINGTON.

PARCEL D (ASSESSORS PARCEL NO. 00520900200600)
LOTS 6 AND 7, BLOCK 2, MOUNT-LAKE TERRACE DIVISION NO. 5, ACCORDING TO THE PLAT THEREOF RECORDED IN VOLUME 13 OF PLATS, PAGE 39, RECORDS OF SNOHOMISH COUNTY, WASHINGTON;

EXCEPT THE EAST 30 FEET OF SAID LOT 7;

EXCEPT THAT PORTION OF LOT 7 CONVEYED TO THE EDMONDS SCHOOL DISTRICT NO. 15 BY DEED RECORDED UNDER RECORDING NUMBER 2082017;

TOGETHER WITH THAT PORTION OF VACATED 237TH STREET SOUTHWEST BY THE CITY OF MOUNTLAKE TERRACE ORDINANCE RECORDED UNDER RECORDING NUMBER 8306010156 THAT WOULD ATTACH BY OPERATION OF LAW.

PARCEL D-1: REMAINDER OF 005209-002-006-00
THAT PORTION OF LOT 11, BLOCK 2, MOUNT-LAKE TERRACE DIVISION NO. 5, ACCORDING TO THE PLAT THEREOF RECORDED IN VOLUME 13 OF PLATS, PAGES 38 AND 39, RECORDS OF SNOHOMISH COUNTY, WASHINGTON, AND THAT PORTION OF VACATED 237TH STREET S.W., AS CONVEYED TO MRS. LOIS M. YOUNG BY DEED RECORDED UNDER RECORDINGNUMBER 2082016 DESCRIBED AS FOLLOWS:

BEGINNING AT THE NORTHWEST CORNER OF LOT 8, MOUNT-LAKE TERRACE DIVISION NO. 5, ACCORDING TO THE PLAT THEREOF RECORDED IN VOLUME 13 OF PLATS, PAGES 38 AND 39, RECORDS OF SNOHOMISH COUNTY, WASHINGTON;
THENCE NORTH 88°48'00" WEST, A DISTANCE OF 42.07;
THENCE NORTH 41°21'14" WEST, A DISTANCE OF 40.730 FEET TO THE TRUE POINT OF BEGINNING OF THIS DESCRIPTION;
THENCE NORTH 88°48'00" WEST, A DISTANCE OF 51.00 FEET TO A POINT ON A CURVE TO THE RIGHT, FROM WHICH POINT THE RADIUS POINT OF SAID CURVE BEARS SOUTH 88 ° 48'00" EAST, A DISTANCE OF 45.00 FEET;
THENCE NORTHEASTERLY ALONG THE ARC OF SAID CURVE AN ARC DISTANCE OF 18.85 FEET;
THENCE NORTH 25°12'00" EAST, A DISTANCE OF 55.64 FEET;
THENCE SOUTH 18°18'00" EAST, A DISTANCE OF 73.34 FEET TO THE TRUE POINT OF BEGINNING.

PARCEL E (ASSESSORS PARCEL NO. 00520900201800)
LOT 18, BLOCK 2, MOUNT-LAKE TERRACE DIVISION NO. 5, ACCORDING TO THE PLAT THEREOF RECORDED IN VOLUME 13 OF PLATS, PAGES 38 AND 37, RECORDS OF SNOHOMISH COUNTY, WASHINGTON;

EXCEPT THAT PORTION CONVEYED TO THE STATE OF WASHINGTON BY DEED FILED UNDER RECORDING NUMBER 1476095;

AND EXCEPT FOR THAT PORTION CONVEYED TO THE CITY OF MOUNTLAKE TERRACE FOR RIGHT OF WAY BY DEED RECORDED UNDER RECORDING NUMBER 201710050219, RECORDS OF SNOHOMISH COUNTY, WASHINGTON.

6/4/26

ADJUSTED LEGAL DESCRIPTION

LOT 1
THAT PORTION OF THE NORTHWEST QUARTER OF THE SOUTHWEST QUARTER OF SECTION 33 AND THE NORTHEAST QUARTER OF SOUTHEAST QUARTER OF SECTION 32, TOWNSHIP 27N, RAGE 4E, MORE PARTICULARLY DESCRIBED AS FOLLOWS:

COMMENCING AT THE NORTHWEST CORNER OF THE SOUTHWEST QUARTER OF SAID SECTION 33;
THENCE SOUTH 88°02'13" EAST, ALONG THE NORTH LINE THEREOF, 211.39 FEET;
THENCE SOUTH 00°47'27" WEST 33.51 FEET TO THE SOUTH RIGHT-OF-WAY MARGIN FOR 236TH ST SW AND THE TRUE POINT OF BEGINNING;
THENCE ALONG SAID SOUTH MARGIN FOR THE FOLLOWING ELEVEN SEGMENTS;
THENCE NORTH 88°02'13" WEST 5.00 FEET;
THENCE SOUTH 00°48'51" WEST 5.50 FEET;
THENCE NORTH 88°02'07" WEST 17.69 FEET;
THENCE SOUTH 65°23'53" WEST 2.25 FEET;
THENCE NORTH 88°02'13" WEST 131.40 FEET;
THENCE SOUTH 67°15'31" WEST 17.45 FEET;
THENCE SOUTH 47°47'27" WEST 18.36 FEET;
THENCE SOUTH 46°41'49" EAST 5.25 FEET;
THENCE SOUTH 47°52'45" WEST 13.25 FEET;
THENCE SOUTH 00°52'29" WEST 23.69 FEET;
THENCE SOUTH 79°18'26" WEST 13.47 FEET TO THE EAST RIGHT OF WAY MARGIN FOR VAN RY BLVD.;
THENCE ALONG SAID EAST RIGHT OF WAY MARGIN FOR THE NEXT THREE SEGMENTS;
THENCE SOUTH 00°57'50" WEST 34.92 FEET TO THE BEGINNING OF A CURVE TO THE RIGHT HAVING A RADIUS OF 246.00 FEET, THE CENTER OF WHICH BEARS NORTH 89°09'41" WEST;
THENCE SOUTHERLY, ALONG SAID CURVE, THROUGH A CENTRAL ANGLE OF 44°17'58", A DISTANCE OF 190.20 FEET TO A POINT OF REVERSE CURVATURE WITH A 524.00-FOOT RADIUS CURVE TO THE LEFT;
THENCE SOUTHWESTERLY, ALONG SAID CURVE, THROUGH A CENTRAL ANGLE OF 03°18'52", A DISTANCE OF 30.31 FEET TO THE INTERSECTION WITH THE WESTERLY EXTENSION OF THE CENTERLINE RIGHT OF WAY FOR 237TH ST SW;
THENCE SOUTH 87°58'03" EAST, ALONG SAID CENTERLINE EXTENSION, 205.28 FEET TO THE WEST RIGHT OF WAY FOR 237TH ST SW;
THENCE NORTH 00°51'29" EAST, ALONG SAID WEST RIGHT OF WAY, 30.01 FEET TO THE NORTH MARGIN FOR 237TH ST SW;
THENCE SOUTH 87°58'03" EAST, ALONG SAID NORTH MARGIN, 30.08 FEET;
THENCE NORTH 00°47'27" EAST 134.27 FEET;
THENCE SOUTH 88°02'55" EAST 60.00 FEET;
THENCE NORTH 00°47'27" EAST 132.73 FEET TO THE TRUE POINT OF BEGINNING.

SITUATE IN SNOHOMISH COUNTY, WASHINGTON.

LOT 2
THAT PORTION OF THE NORTHWEST QUARTER OF THE SOUTHWEST QUARTER OF SECTION 33 AND THE NORTHEAST QUARTER OF SOUTHEAST QUARTER OF SECTION 32, TOWNSHIP 27N, RAGE 4E, MORE PARTICULARLY DESCRIBED AS FOLLOWS:

BEGINNING AT THE NORTHWEST CORNER OF THE SOUTHWEST QUARTER OF SAID SECTION 33;
THENCE SOUTH 88°02'13" EAST, ALONG THE NORTH LINE THEREOF, 211.39 FEET;
THENCE SOUTH 00°47'27" WEST 33.51 FEET TO THE SOUTH RIGHT-OF-WAY MARGIN FOR 236TH ST SW AND THE TRUE POINT OF BEGINNING;THENCE SOUTH 00°47'27" WEST 132.73 FEET;
THENCE NORTH 88°02'55" WEST 60.00 FEET;
THENCE SOUTH 00°47'27" WEST 134.27 FEET;
THENCE NORTH 87°58'03" WEST 30.08 FEET;
THENCE SOUTH 00°51'29" WEST 30.01 FEET TO THE CENTERLINE WEST END OF 237TH ST SW AND THE TRUE POINT OF BEGINNING;
THENCE NORTH 87°58'03" WEST, ALONG THE WESTERLY EXTENSION OF SAID CENTERLINE, 205.28 FEET TO THE EAST RIGHT OF WAY MARGIN FOR VAN RY BLVD AND THE BEGINNING OF A CURVE TO THE LEFT HAVING A RADIUS OF 524.00 FEET, THE CENTER OF WHICH BEARS SOUTH 48°10'36" EAST;
THENCE ALONG SAID MARGIN FOR THE FOLLOWING TWO SEGMENTS;
THENCE SOUTHWESTERLY, ALONG SAID CURVE, THROUGH A CENTRAL ANGLE OF 16°55'45", A DISTANCE OF 154.83 FEET;
THENCE SOUTH 24°53'39" WEST 6.24 FEET;
THENCE SOUTH 65°04'02" EAST 185.65 FEET;
THENCE NORTH 00°48'25" EAST 58.54 FEET;
THENCE SOUTH 88°01'36" EAST 121.33 FEET;
THENCE NORTH 00°48'54" EAST 121.15 FEET;
THENCE NORTH 00°51'29" EAST 30.01 FEET TO THE TRUE POINT OF BEGINNING.

SITUATE IN SNOHOMISH COUNTY, WASHINGTON.

202606165001

MERIDIAN

WASHINGTON STATE PLANE COORDINATE SYSTEM - NORTH ZONE NAD83/2011 (2010.00 EPOCH) PER GNSS OBSERVATIONS UTILIZING CORRECTIONS FROM THE WASHINGTON STATE REFERENCE NETWORK (WSRN)

NOTES

1. A 5" ELECTRONIC TOTAL STATION WAS USED FOR THIS FIELD TRAVERSE SURVEY. ALL EQUIPMENT HAS BEEN MAINTAINED IN ACCORDANCE WITH THE MANUFACTURER'S GUIDELINES. ACCURACY MEETS OR EXCEEDS W.A.C. 332-130-090.
2. ALL TITLE INFORMATION SHOWN ON THIS SURVEY WAS EXTRACTED FROM CHICAGO TITLE INSURANCE COMPANY SUBDIVISION GUARANTEE NO. 260342-SC, THIRD UPDATE, DATED 7, MAY 2026. ATWELL, LLC HAS CONDUCTED NO INDEPENDENT TITLE RESEARCH, AND HAS RELIED WHOLLY ON THE TITLE COMPANY'S REPRESENTATIONS OF THE TITLE'S CONDITION TO PREPARE THIS SURVEY AND QUALIFIES THE MAP'S ACCURACY AND COMPLETENESS TO THAT EXTENT.
3. THE INFORMATION DEPICTED ON THIS MAP REPRESENTS THE RESULTS OF A SURVEY MADE ON THE DATE INDICATED AND CAN ONLY BE CONSIDERED AS INDICATING THE GENERAL CONDITION EXISTING AT THAT TIME. ALL CONTROL INDICATED AS "FOUND" WAS RECOVERED FOR THIS PROJECT ON MARCH, 2025, UNLESS OTHERWISE NOTED.
4. ALL DISTANCES ARE IN FEET.

REFERENCES

1. CITY OF MOUNTLAKE TERRACE BOUNDARY LINE ADJUSTMENT NO. PLL22-0002 UNDER AFN. 202301175001.
2. MOUNTLAKE TERRACE DIVISION NO. 2, FILED IN VOLUME 13 OF PLATS, PAGE 23.
3. PLAT OF MOUNTLAKE TERRACE, FILED IN VOLUME 13 OF PLATS, PAGE 3.
4. WASHINGTON STATE DEPT. OF TRANSPORTAITION PLANS TITLED "SR 5 E. 200TH ST. TO SWAMP CREEK" FOR RIGHT OF WAY STATIONS 301+97.30 TO 332+00.
5. MOUNTLAKE TERRACE DIVISION NO. 5, FILED IN VOLUME 13 OF PLATS, PAGES 38-39.
6. MLT ENTERPRISES BINDING SITE PLAN UNDER AFN. 8902215001.
7. RECORD OF SURVEY UNDER AFN. 9112025010.
8. PLAT OF GATEWAY TOD BINDING SITE PLAN UNDER AFN. 201801245014.

TAX PARCEL NUMBERS

00520900201100
00520900201600
27043200402100
00520900201800
00520900200600

EXISTING SITE ADDRESSES

00520900201100: VACANT LAND
00520900201600: VACANT LAND
27043200402100: VACANT LAND
00520900201800: 5906 236TH ST SW, MOUNTLAKE TERRACE, WA. 98043
00520900200600: 6002 237TH ST SW, MOUNTLAKE TERRACE, WA. 98043

PROPOSED SITE ADDRESSES

LOT 1: 5906 236TH ST SW
LOT 2: 6002 237TH ST SW

EXISTING PARCEL AREAS

00520900201100: 22,011 S.F.
00520900201600: 13,300 S.F.
27043200402100: 28,781 S.F.
00520900201800: 11,410 S.F.
00520900200600: 20,229 S.F.

PROPOSED PARCEL AREA

LOT 1: 53,182 S.F.
LOT 2: 42,549 S.F.

CITY OF MOUNTLAKE TERRACE

FILE NO.: P-BL-26-0005

AUDITORS CERTIFICATE 202606165001

FILED FOR RECORD THIS 16th DAY OF June, 20 26
AT 9:48 A. M. IN BOOK ___ OF SURVEYS, AT PAGE ___
___ AT THE REQUEST OF SHANE BARNES

Garth Fell
COUNTY AUDITOR

DEPUTY COUNTY AUDITOR

SURVEYOR'S CERTIFICATE

THIS MAP CORRECTLY REPRESENTS A SURVEY MADE BY ME OR UNDER MY DIRECTION IN CONFORMANCE WITH THE REQUIREMENTS OF THE SURVEY RECORDING ACT AT THE REQUEST OF WHISKEY 6, LLC IN JUNE 20 26

C. SHANE BARNES
PROFESSIONAL LAND SURVEYOR
CERTIFICATE NO. 35145

CHRISTOPHER SHANE BARNES STATE OF WASHINGTON 35145 REGISTERED PROFESSIONAL LAND SURVEYOR

ATWELL
P.O. BOX 289, WOODINVILLE, WA 98072 | PHONE: (425) 486-1252
WWW.ATWELL-GROUP.COM

BOUNDARY LINE ADJUSTMENT & RECORD OF SURVEY
FOR
WHISKEY 6, LLC
14800 NE WOODINVILLE WAY
WOODINVILLE, WA. 98072

JOB NO:	CHKD BY:	DRAWN BY:	SHEET:
25003674	CSB	CSB/ARB	1 OF 5

NW1/4 SW1/4, SEC.33, TWP. 27N, RGE.4E, W.M.
NE1/4 SE1/4, SEC.32, TWP. 27N, RGE.4E, W.M.
CITY OF MOUNTLAKE TERRACE, SNOHOMISH COUNTY, WASHINGTON

RESTRICTIONS OF RECORD

PER CHICAGO TITLE INSURANCE COMPANY SUBDIVISION GUARANTEE NO. 260342-SC, THIRD UPDATE, DATED 7, MAY 2026.

1. SUBJECT TO AN EASEMENT GRANTED TO THE CITY OF MOUNTLAKE TERRACE FOR SANITARY SEWERAGE, RECORDED UNDER AFN. 1354824. PLOTTED.
2. SUBJECT TO AN EASEMENT FOR INGRESS, EGRESS AND UTILITIES, RECORDED UNDER AFN. 2082018. PLOTTED.
3. SUBJECT TO RESERVATIONS, EASEMENTS OR OTHER MATTERS IN THE PROCEEDINGS OCCASIONING THE ABANDONMENT OR VACATION OF THE 237TH STREET S.W. RECORDED UNDER AFN. 8210180198 AND 8306010156.
4. SUBJECT TO AN EASEMENT FOR RETAINING WALL INSPECTION AND ACCESS AND RIGHTS INCIDENTAL THERETO, AS GRANTED IN A DOCUMENT UNDER AFN. 202312140345. PLOTTED.
5. SUBJECT TO THE COVENANTS, CONDITIONS, RESTRICTIONS, RECITALS, RESERVATIONS, EASEMENTS, EASEMENT PROVISIONS, ENCROACHMENTS, DEDICATIONS, BUILDING SETBACK LINES, NOTES, STATEMENTS, AND OTHER MATTERS, IF ANY AS SET FORTH ON PLAT OF MOUNT-LAKE TERRACE NO. 5 IN VOLUME 13 OF PLATS, PAGES 38-39, AFN 965233.
6. SUBJECT TO THE COVENANTS, CONDITIONS, RESTRICTIONS AND EASEMENTS BUT OMITTING ANY COVENANTS OR RESTRICTIONS, IF ANY AS SET FORTH IN THE DOCUMENT RECORDED UNDER AFN. 966942. DOCUMENT AMENDED UNDER AFNS. 972884, 975640, 1737440 AND 1737441.
7. SUBJECT TO THE RELINQUISHMENT OF ACCESS TO STATE HIGHWAY NUMBER 1 (SR 5) AND OF LIGHT, VIEW AND AIR BY DEED RECORDED UNDER AFN. 1498998.
8. SUBJECT TO THE RELINQUISHMENT OF ACCESS TO STATE HIGHWAY NUMBER 1 (SR 5) AND OF LIGHT, VIEW AND AIR BY DEED RECORDED UNDER AFN 1580907.
9. SUBJECT TO THE RELINQUISHMENT OF ACCESS TO STATE HIGHWAY NUMBER 1 (SR 5) AND OF LIGHT, VIEW AND AIR BY DEED RECORDED UNDER AFN. 1635341.
10. SUBJECT TO THE CONDEMNATION OF ACCESS TO STATE HIGHWAY NUMBER 1 (SR 5) AND OF LIGHT, VIEW AND AIR BY SNOHOMISH COUNTY SUPERIOR CASE CAUSE NUMBER: 135550.
11. SUBJECT TO AN EASEMENT GRANTED TO THE CITY OF MOUNTLAKE TERRACE TOD FOR PERMANENT SIDEWALK AND ROAD EASEMENT RECORDED UNDER AFN. 201611210587. PLOTTED.
12. SUBJECT TO AN EASEMENT TO THE CITY OF MOUNTLAKE TERRACE FOR SEWER UTILITY LINES AND APPURTENANCES RECORDED UNDER AFN. 202312140346. PLOTTED.
13. SUBJECT TO EASEMENT(S) GRANTED TO THE PACIFIC TELEPHONE AND TELEGRAPH COMPANY TO ERECT AND MAINTAIN POLES, WITH NECESSARY WIRES AND FIXTURES THEREON, AND KEEP SAME FREE FROM FOLIAGE, UNDER AFN'S 448190 AND 462331. PLOTTED.
14. SUBJECT TO AN EASEMENT FOR SEWER RECORDED UNDER AFN. 1354813. DOES NOT AFFECT SUBJECT PROPERTY.
15. SUBJECT TO AN EASEMENT TO THE CITY OF MOUNTLAKE TERRACE FOR UNDERGROUND PIPELINES AND/OR MAINS FOR SANITARY SEWERAGE RECORDED UNDER AFN. 1410368. PLOTTED.
16. SUBJECT TO AN EASEMENT TO THE CITY OF MOUNTLAKE TERRACE FOR UNDERGROUND PIPELINES AND/OR MAINS FOR SANITARY SEWERAGE RECORDED UNDER AFN. 1422149. PLOTTED.
17. SUBJECT TO SEWER EASEMENT AGREEMENT AND THE TERMS AND CONDITIONS THEREOF UNDER AFN. 1448815.
18. SUBJECT TO RELINQUISHMENT OF ACCESS TO STATE HIGHWAY NUMBER PSH NO. 1 AND OF LIGHT, VIEW AND AIR BY DEED UNDER AFN'S 1506859 AND 1506860.

    EXCEPT THAT THE GRANTORS HEREIN, THEIR HEIRS, SUCCESSORS OR ASSIGNS, SHALL HAVE THE RIGHT OF REASONABLE ACCESS EASTERLY OF HIGHWAY ENGINEER'S STATION X2 22 +50.
19. SUBJECT TO AN AGREEMENT LICENSE TO OCCUPY RIGHT OF WAY AND THE TERMS AND CONDITIONS THEREOF BETWEEN PACIFIC NORTHWEST BELL TELEPHONE COMPANY AND GENERAL TELEPHONE COMPANY OF THE NORTHWEST INC. AND ASSIGNS UNDER AFN. 2124863.
20. SUBJECT TO AN EASEMENT TO GENERAL TELEPHONE COMPANY OF THE NORTHWEST, INC. FOR COMMUNICATION SERVICE, POWER SERVICE, AND OTHER RELATED SERVICES RECORDED UNDER AFN. 2136780. PLOTTED.
21. SUBJECT TO RIGHT OF THE STATE OF WASHINGTON, OR ITS ASSIGNS TO ENTER UPON PROPERTY TO MAINTAIN A CULVERT, AS RESERVED IN DEEDS RECORDED UNDER AFN'S. 8210050162 AND 8302150157.
22. SUBJECT TO A JOINDER AGREEMENT AND THE TERMS AND CONDITIONS THEREOF UNDER AFN. 201605040137.
23. SUBJECT TO A DECLARATION OF LAND USE RESTRICTION AND REAL PROPERTY COVENANT AND THE TERMS AND CONDITIONS THEREOF UNDER AFN. 201611210586
24. SUBJECT TO DEVELOPMENT AGREEMENT AND THE TERMS AND CONDITIONS THEREOF UNDER AFN. 201611210588.
25. SUBJECT TO COVENANTS, CONDITIONS, RESTRICTIONS, RECITALS, RESERVATIONS, EASEMENTS, EASEMENT PROVISIONS, ENCROACHMENTS, DEDICATIONS, BUILDING SETBACK LINES, NOTES, STATEMENTS, AND OTHER MATTERS, IF ANY, AS SET FORTH ON PLAT OF GATEWAY TOD BINDING SITE PLAN UNDER AFN. 201801245014.
26. SUBJECT TO COVENANTS, CONDITIONS AND RESTRICTIONS BUT OMITTING ANY COVENANTS OR RESTRICTIONS, IF ANY, AS SET FORTH IN AMENDED AND RESTATED GATEWAY TOD AGREEMENT AND DECLARATION OF COVENANTS, CONDITIONS AND RESTRICTIONS UNDER AFN. 201908300686.

    SAID INSTRUMENT AMENDS AND RESTATES INSTRUMENT RECORDED UNDER RECORDING NO. 201806050746.
27. SUBJECT TO PERMANENT SEWER AGREEMENT AND THE TERMS AND CONDITIONS THEREOF UNDER AFN. 201703080345.
28. SUBJECT TO EASEMENT(S) GRANTED TO PUGET SOUND ENERGY, INC., A WASHINGTON CORPORATION FOR TRANSMISSION, DISTRIBUTION AND SALE OF GAS AND RIGHTS INCIDENTAL THERETO, AS GRANTED IN A DOCUMENT UNDER AFN. 201903180339.
29. SUBJECT TO COVENANTS, CONDITIONS, RESTRICTIONS, RECITALS, RESERVATIONS, EASEMENTS, EASEMENT PROVISIONS, ENCROACHMENTS, DEDICATIONS, BUILDING SETBACK LINES, NOTES, STATEMENTS, AND OTHER MATTERS, IF ANY, AS SET FORTH ON THE PLAT OF MOUNTLAKE TERRACE DIVISION NO. 5 IN VOLUME 13 OF PLATS, PAGES 38-39.
30. SUBJECT TO PUBLIC AND/OR PRIVATE EASEMENTS, IF ANY, IN EXISTENCE, OVER, UNDER ALONG AND ACROSS THAT PORTION OF THE REAL ESTATE UNDER SEARCH LYING WITHIN VACATED 237TH STREET SW.
31. SUBJECT TO THE COVENANTS, CONDITIONS, RESTRICTIONS, RECITALS, RESERVATIONS, EASEMENTS, EASEMENT PROVISIONS, ENCROACHMENTS,DEDICATIONS, BUILDING SETBACK LINES, NOTES, STATEMENTS, AND OTHER MATTERS, IF ANY, AS SET FORTH ON BOUNDARY LINE ADJUSTMENT & RECORD OF SURVEY RECORDING NO: 202301175001. PLOTTED
32. SUBJECT TO THE COVENANTS, CONDITIONS, RESTRICTIONS, RECITALS, RESERVATIONS, EASEMENTS, EASEMENT PROVISIONS, DEDICATIONS, BUILDING SETBACK LINES, NOTES, STATEMENTS, AND OTHER MATTERS, IF ANY, AS SET FORTH ON THE SURVEY RECORDED UNDER AFN. 9112025010.
33. SUBJECT TO AN EASEMENT TO PUBLIC UTILITY DISTRICT NO. 1 OF SNOHOMISH COUNTY FOR POWER DISTRIBUTION RECORDED UNDER AFN. 201710050243. PLOTTED.

EASEMENT PROVISIONS

1. A PRIVATE SEWER EASEMENT OVER PROPOSED LOT 1, AS SHOWN HEREON, IS HEREBY GRANTED TO THE OWNER OF PROPOSED LOT 2. THE OWNER OF PROPOSED LOT 2 SHALL BE RESPONSIBLE FOR THE COST OF MAINTENANCE, REPAIRS, AND RECONSTRUCTION OF THE PRIVATE SEWER FACILITIES LYING WITHIN SAID EASEMENT.

202606165001

CITY OF MOUNTLAKE TERRACE

FILE NO.: P-BL-26-0005

6/4/26

CHRISTOPHER SHANE BARNES
STATE OF WASHINGTON
35145
REGISTERED
PROFESSIONAL LAND SURVEYOR

ATWELL

P.O. BOX 289, WOODINVILLE, WA 98072 | PHONE: (425) 486-1252
WWW.ATWELL-GROUP.COM

BOUNDARY LINE ADJUSTMENT & RECORD OF SURVEY
FOR
WHISKEY 6, LLC
14800 NE WOODINVILLE WAY
WOODINVILLE, WA. 98072

JOB NO:	CHKD BY:	DRAWN BY:	SHEET:
25003674	CSB	CSB/ARB	2 OF 5

NW1/4 SW1/4, SEC.33, TWP. 27N, RGE.4E, W.M.
NE1/4 SE1/4, SEC.32, TWP. 27N, RGE.4E, W.M.
CITY OF MOUNTLAKE TERRACE, SNOHOMISH COUNTY, WASHINGTON

OLD LOT CONFIGURATION

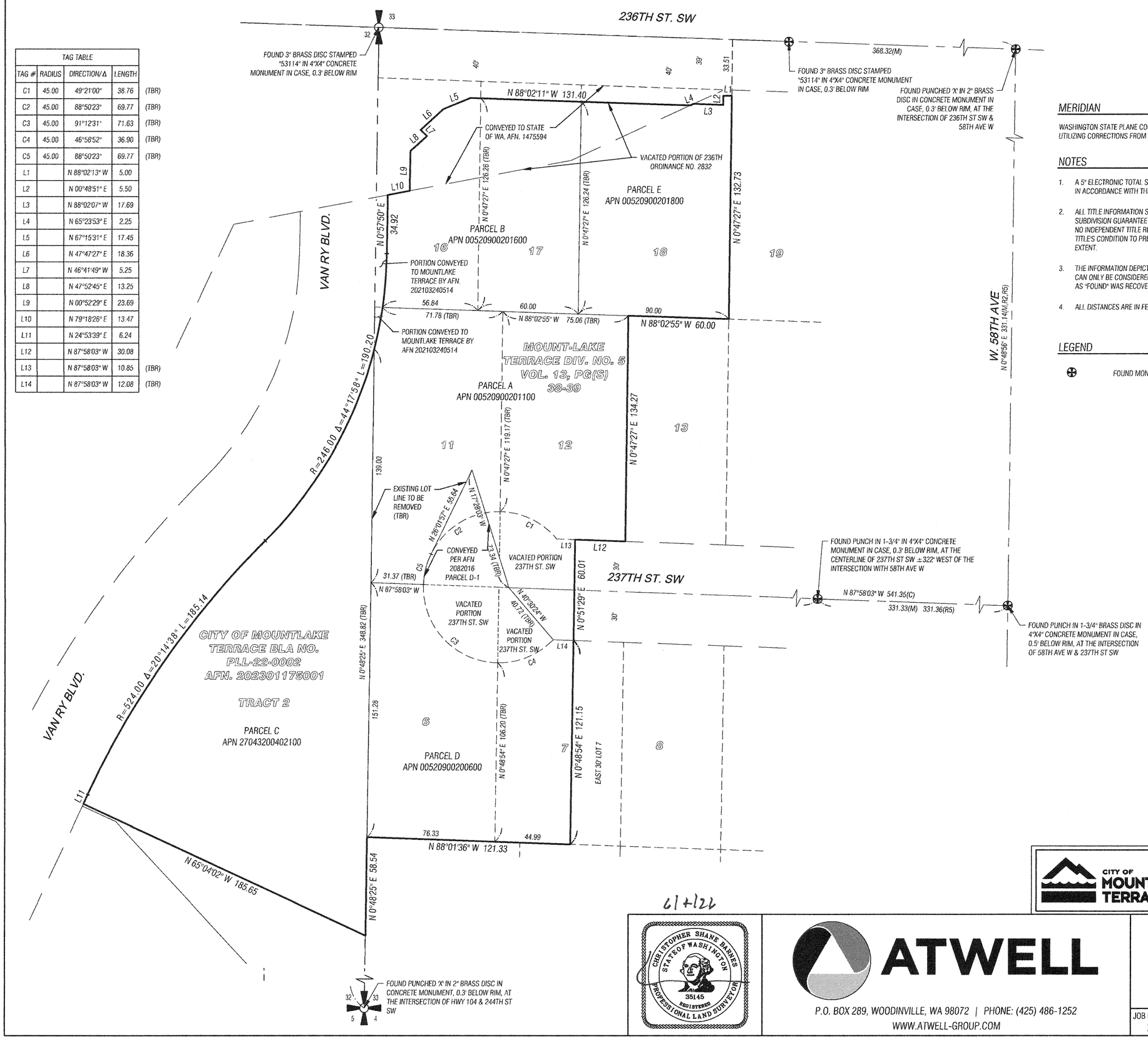

TAG TABLE				
TAG #	RADIUS	DIRECTION/Δ	LENGTH	
C1	45.00	49°21'00"	38.76	(TBR)
C2	45.00	88°50'23"	69.77	(TBR)
C3	45.00	91°12'31"	71.63	(TBR)
C4	45.00	46°58'52"	36.90	(TBR)
C5	45.00	88°50'23"	69.77	(TBR)
L1		N 88°02'13" W	5.00	
L2		N 00°48'51" E	5.50	
L3		N 88°02'07" W	17.69	
L4		N 65°23'53" E	2.25	
L5		N 67°15'31" E	17.45	
L6		N 47°47'27" E	18.36	
L7		N 46°41'49" W	5.25	
L8		N 47°52'45" E	13.25	
L9		N 00°52'29" E	23.69	
L10		N 79°18'26" E	13.47	
L11		N 24°53'39" E	6.24	
L12		N 87°58'03" W	30.08	
L13		N 87°58'03" W	10.85	(TBR)
L14		N 87°58'03" W	12.08	(TBR)

SCALE: 1" = 40'

MERIDIAN

WASHINGTON STATE PLANE COORDINATE SYSTEM - NORTH ZONE NAD83/2011 (2010.00 EPOCH) PER GNSS OBSERVATIONS UTILIZING CORRECTIONS FROM THE WASHINGTON STATE REFERENCE NETWORK (WSRN)

NOTES

1. A 5" ELECTRONIC TOTAL STATION WAS USED FOR THIS FIELD TRAVERSE SURVEY. ALL EQUIPMENT HAS BEEN MAINTAINED IN ACCORDANCE WITH THE MANUFACTURER'S GUIDELINES. ACCURACY MEETS OR EXCEEDS W.A.C. 332-130-090.
2. ALL TITLE INFORMATION SHOWN ON THIS SURVEY WAS EXTRACTED FROM CHICAGO TITLE INSURANCE COMPANY SUBDIVISION GUARANTEE NO. 260342-SC, SECOND UPDATE, DATED 25, MARCH 2026. ATWELL, LLC HAS CONDUCTED NO INDEPENDENT TITLE RESEARCH, AND HAS RELIED WHOLLY ON THE TITLE COMPANY'S REPRESENTATIONS OF THE TITLE'S CONDITION TO PREPARE THIS SURVEY AND QUALIFIES THE MAP'S ACCURACY AND COMPLETENESS TO THAT EXTENT.
3. THE INFORMATION DEPICTED ON THIS MAP REPRESENTS THE RESULTS OF A SURVEY MADE ON THE DATE INDICATED AND CAN ONLY BE CONSIDERED AS INDICATING THE GENERAL CONDITION EXISTING AT THAT TIME. ALL CONTROL INDICATED AS "FOUND" WAS RECOVERED FOR THIS PROJECT ON MARCH, 2025, UNLESS OTHERWISE NOTED.
4. ALL DISTANCES ARE IN FEET.

LEGEND

FOUND MONUMENT	(R#)	REFER TO LIST OF REFERENCES
	(M)	MEASURED
	(C)	CALCULATED
	(TBR)	LOT LINE TO BE REMOVED

202606165001

CITY OF MOUNTLAKE TERRACE

FILE NO.: P-BL-26-0005

61+122

CHRISTOPHER SHANE BARNES
STATE OF WASHINGTON
35145
REGISTERED
PROFESSIONAL LAND SURVEYOR

ATWELL
P.O. BOX 289, WOODINVILLE, WA 98072 | PHONE: (425) 486-1252
WWW.ATWELL-GROUP.COM

BOUNDARY LINE ADJUSTMENT & RECORD OF SURVEY
FOR
WHISKEY 6, LLC
14800 NE WOODINVILLE WAY
WOODINVILLE, WA. 98072

JOB NO:	CHKD BY:	DRAWN BY:	SHEET:
25003674	CSB	CSB/ARB	3 OF 5

NW1/4 SW1/4, SEC.33, TWP. 27N, RGE.4E, W.M.
NE1/4 SE1/4, SEC.32, TWP. 27N, RGE.4E, W.M.
CITY OF MOUNTLAKE TERRACE, SNOHOMISH COUNTY, WASHINGTON

NEW LOT CONFIGURATION & EXISTING EASEMENTS

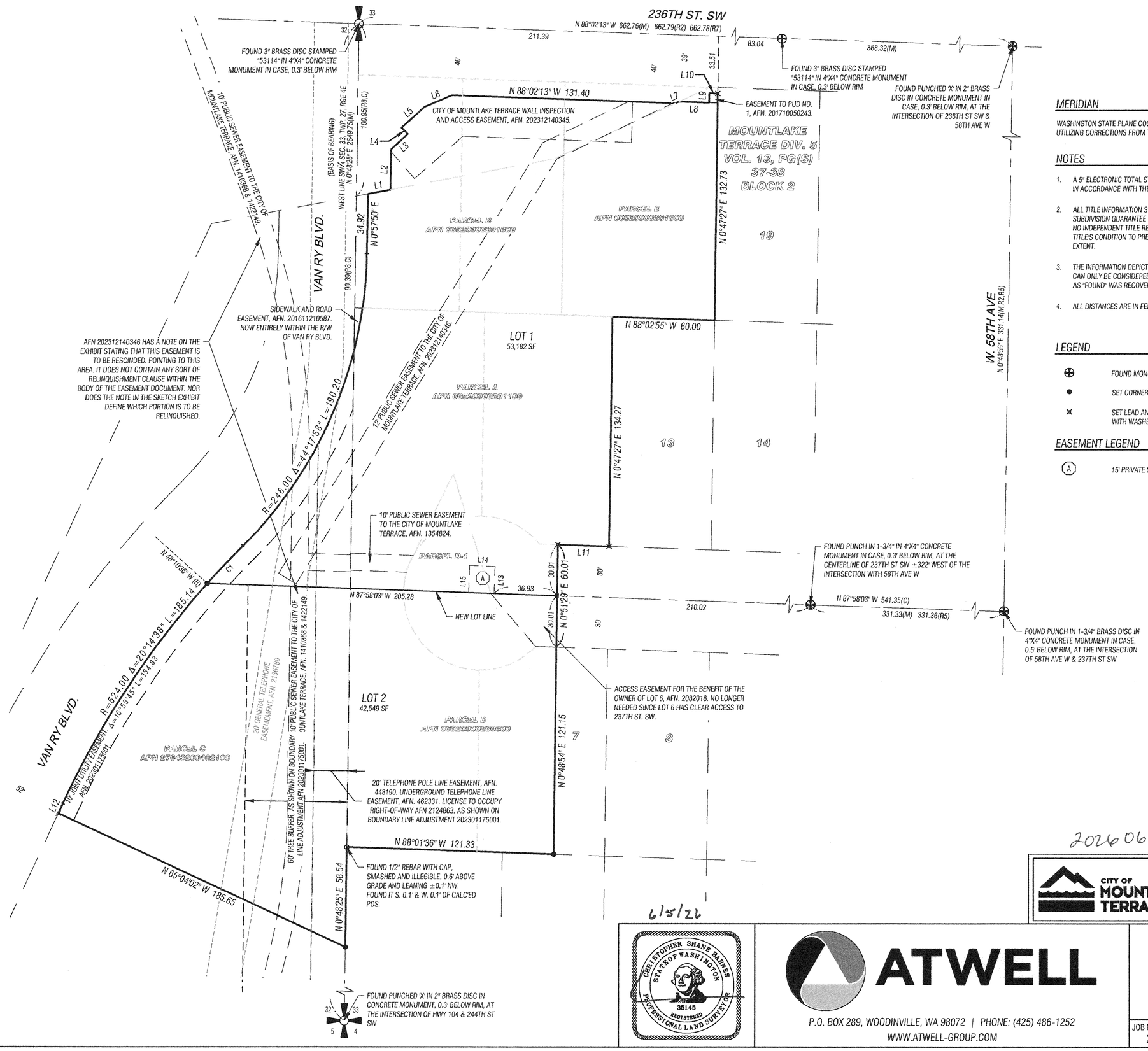

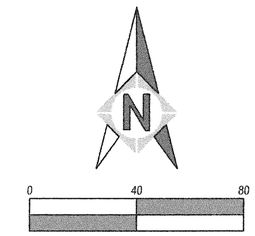

SCALE: 1" = 40'

MERIDIAN

WASHINGTON STATE PLANE COORDINATE SYSTEM - NORTH ZONE NAD83/2011 (2010.00 EPOCH) PER GNSS OBSERVATIONS UTILIZING CORRECTIONS FROM THE WASHINGTON STATE REFERENCE NETWORK (WSRN)

NOTES

1. A 5" ELECTRONIC TOTAL STATION WAS USED FOR THIS FIELD TRAVERSE SURVEY. ALL EQUIPMENT HAS BEEN MAINTAINED IN ACCORDANCE WITH THE MANUFACTURER'S GUIDELINES. ACCURACY MEETS OR EXCEEDS W.A.C. 332-130-090.
2. ALL TITLE INFORMATION SHOWN ON THIS SURVEY WAS EXTRACTED FROM CHICAGO TITLE INSURANCE COMPANY SUBDIVISION GUARANTEE NO. 260342-SC, SECOND UPDATE, DATED 25, MARCH 2026. ATWELL, LLC HAS CONDUCTED NO INDEPENDENT TITLE RESEARCH, AND HAS RELIED WHOLLY ON THE TITLE COMPANY'S REPRESENTATIONS OF THE TITLE'S CONDITION TO PREPARE THIS SURVEY AND QUALIFIES THE MAP'S ACCURACY AND COMPLETENESS TO THAT EXTENT.
3. THE INFORMATION DEPICTED ON THIS MAP REPRESENTS THE RESULTS OF A SURVEY MADE ON THE DATE INDICATED AND CAN ONLY BE CONSIDERED AS INDICATING THE GENERAL CONDITION EXISTING AT THAT TIME. ALL CONTROL INDICATED AS "FOUND" WAS RECOVERED FOR THIS PROJECT ON MARCH, 2025, UNLESS OTHERWISE NOTED.
4. ALL DISTANCES ARE IN FEET.

LEGEND

⊕	FOUND MONUMENT	(R#)	REFER TO LIST OF REFERENCES
●	SET CORNER	(M)	MEASURED
⊗	SET LEAD AND TACK WITH WASHER	(C)	CALCULATED

EASEMENT LEGEND

(A) 15' PRIVATE SEWER EASEMENT, SEE PROVISION 1 ON SHEET 2.

CURVE TABLE

CURVE	RADIUS	DELTA	LENGTH
C1	524.00	3°18'52"	30.31

LINE TABLE

LINE	DIRECTION	LENGTH
L1	N 79°18'26" E	13.47
L2	N 00°52'29" E	23.69
L3	N 47°52'45" E	13.25
L4	N 46°41'49" W	5.25
L5	N 47°47'27" E	18.36
L6	N 67°15'31" E	17.45
L7	N 65°23'53" E	2.25
L8	N 88°02'07" W	17.69
L9	N 00°48'51" E	5.50
L10	N 88°02'13" W	5.00
L11	N 87°58'03" W	30.08
L12	N 24°53'39" E	6.24
L13	S 02°01'57" W	15.88
L14	N 87°58'03" W	15.00
L15	S 02°01'57" W	15.88

202606165001

CITY OF MOUNTLAKE TERRACE

FILE NO.: P-BL-26-0005

6/5/26

CHRISTOPHER SHANE BARNES
STATE OF WASHINGTON
35145
REGISTERED
PROFESSIONAL LAND SURVEYOR

ATWELL

P.O. BOX 289, WOODINVILLE, WA 98072 | PHONE: (425) 486-1252
WWW.ATWELL-GROUP.COM

BOUNDARY LINE ADJUSTMENT & RECORD OF SURVEY
FOR
WHISKEY 6, LLC
14800 NE WOODINVILLE WAY
WOODINVILLE, WA. 98072

JOB NO:	CHKD BY:	DRAWN BY:	SHEET:
25003674	CSB	CSB/ARB	4 OF 5

NW1/4 SW1/4, SEC.33, TWP. 27N, RGE.4E, W.M.
NE1/4 SE1/4, SEC.32, TWP. 27N, RGE.4E, W.M.
CITY OF MOUNTLAKE TERRACE, SNOHOMISH COUNTY, WASHINGTON

NEW LOT CONFIGURATION & OCCUPATION

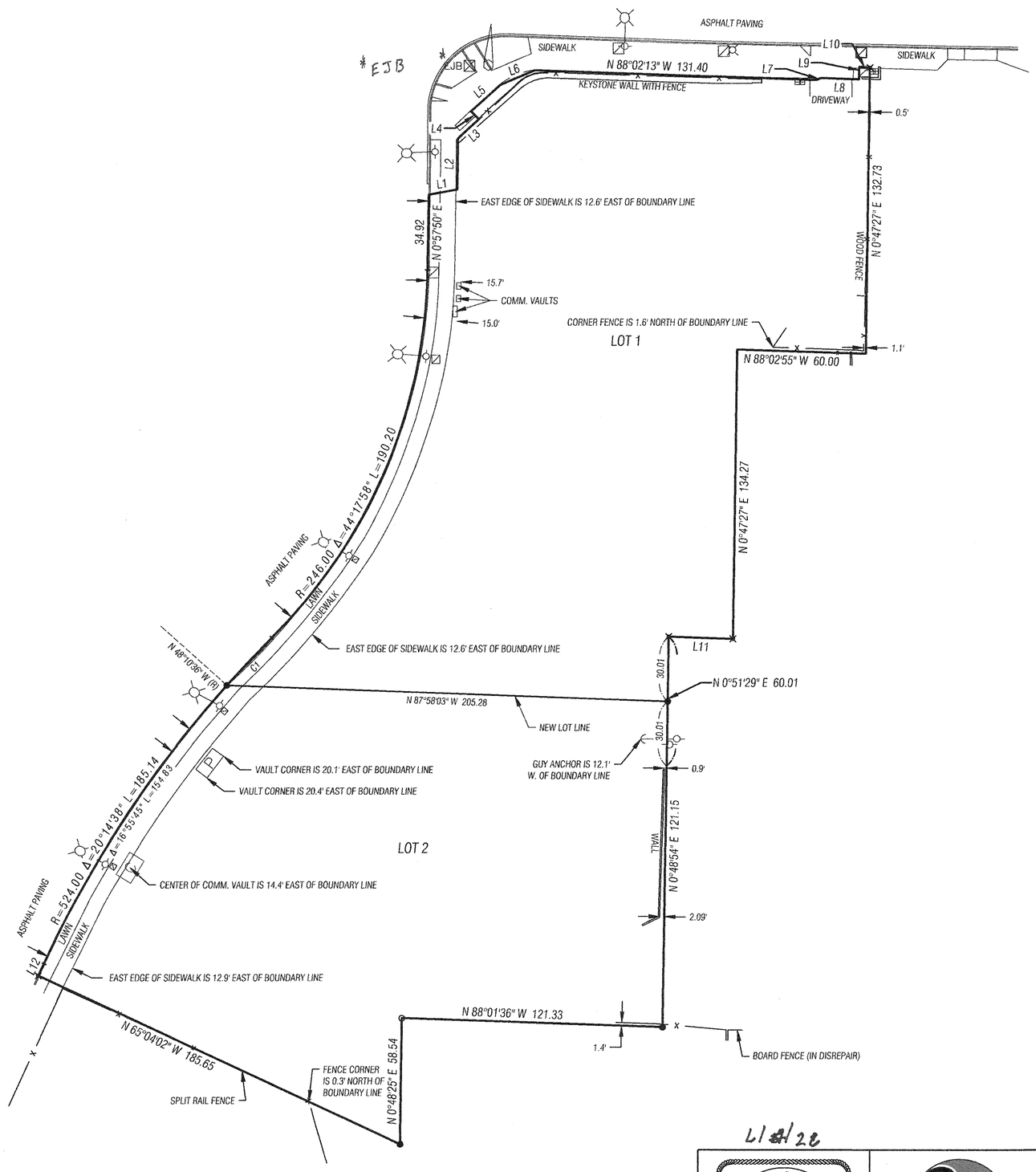

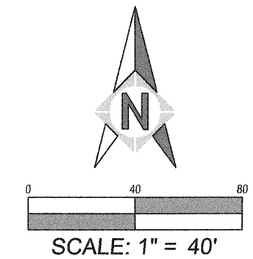

MERIDIAN

WASHINGTON STATE PLANE COORDINATE SYSTEM - NORTH ZONE NAD83/2011 (2010.00 EPOCH) PER GNSS OBSERVATIONS UTILIZING CORRECTIONS FROM THE WASHINGTON STATE REFERENCE NETWORK (WSRN)

NOTES

1. A 5" ELECTRONIC TOTAL STATION WAS USED FOR THIS FIELD TRAVERSE SURVEY. ALL EQUIPMENT HAS BEEN MAINTAINED IN ACCORDANCE WITH THE MANUFACTURER'S GUIDELINES. ACCURACY MEETS OR EXCEEDS W.A.C. 332-130-090.
2. ALL TITLE INFORMATION SHOWN ON THIS SURVEY WAS EXTRACTED FROM CHICAGO TITLE INSURANCE COMPANY SUBDIVISION GUARANTEE NO. 260342-SC, SECOND UPDATE, DATED 25, MARCH 2026. ATWELL, LLC HAS CONDUCTED NO INDEPENDENT TITLE RESEARCH, AND HAS RELIED WHOLLY ON THE TITLE COMPANY'S REPRESENTATIONS OF THE TITLES CONDITION TO PREPARE THIS SURVEY AND QUALIFIES THE MAP'S ACCURACY AND COMPLETENESS TO THAT EXTENT.
3. THE INFORMATION DEPICTED ON THIS MAP REPRESENTS THE RESULTS OF A SURVEY MADE ON THE DATE INDICATED AND CAN ONLY BE CONSIDERED AS INDICATING THE GENERAL CONDITION EXISTING AT THAT TIME. ALL CONTROL INDICATED AS "FOUND" WAS RECOVERED FOR THIS PROJECT ON MARCH, 2025, UNLESS OTHERWISE NOTED.
4. ALL DISTANCES ARE IN FEET.

LEGEND

- C — COMMUNICATIONS VAULT
- STREET LIGHT
- ELECTRICAL JUNCTION BOX
- GUY ANCHOR
- P — POWER VAULT
- UTILITY POLE
- FENCE LINE

TAG TABLE

TAG #	RADIUS	DIRECTION/Δ	LENGTH
C1	524.00	3°18'52"	30.31
L1		N 79°18'26" E	13.47
L2		N 00°52'29" E	23.69
L3		N 47°52'45" E	13.25
L4		N 46°41'49" W	5.25
L5		N 47°47'27" E	18.36
L6		N 67°15'31" E	17.45
L7		N 65°23'53" E	2.25
L8		N 88°02'07" W	17.69
L9		N 00°48'51" E	5.50
L10		N 88°02'13" W	5.00
L11		N 87°58'03" W	30.08
L12		N 24°53'39" E	6.24

2 0 2606165001

CITY OF MOUNTLAKE TERRACE

FILE NO.: P-BL-26-0005

L1 4/26

CHRISTOPHER SHANE BARNES
STATE OF WASHINGTON
35145
REGISTERED
PROFESSIONAL LAND SURVEYOR

ATWELL

P.O. BOX 289, WOODINVILLE, WA 98072 | PHONE: (425) 486-1252
WWW.ATWELL-GROUP.COM

BOUNDARY LINE ADJUSTMENT & RECORD OF SURVEY
FOR
WHISKEY 6, LLC
14800 NE WOODINVILLE WAY
WOODINVILLE, WA. 98072

JOB NO:	CHKD BY:	DRAWN BY:	SHEET:
25003674	CSB	CSB/ARB	5 OF 5

TERRACE STATION TOD - LOT 1 & LOT 2

veer
ARCHITECTURE PLLC

P-PPR-26-0016

TERRACE STATION TOD - LOT 1 & LOT 2

veer
ARCHITECTURE PLLC

P-PPR-26-0016

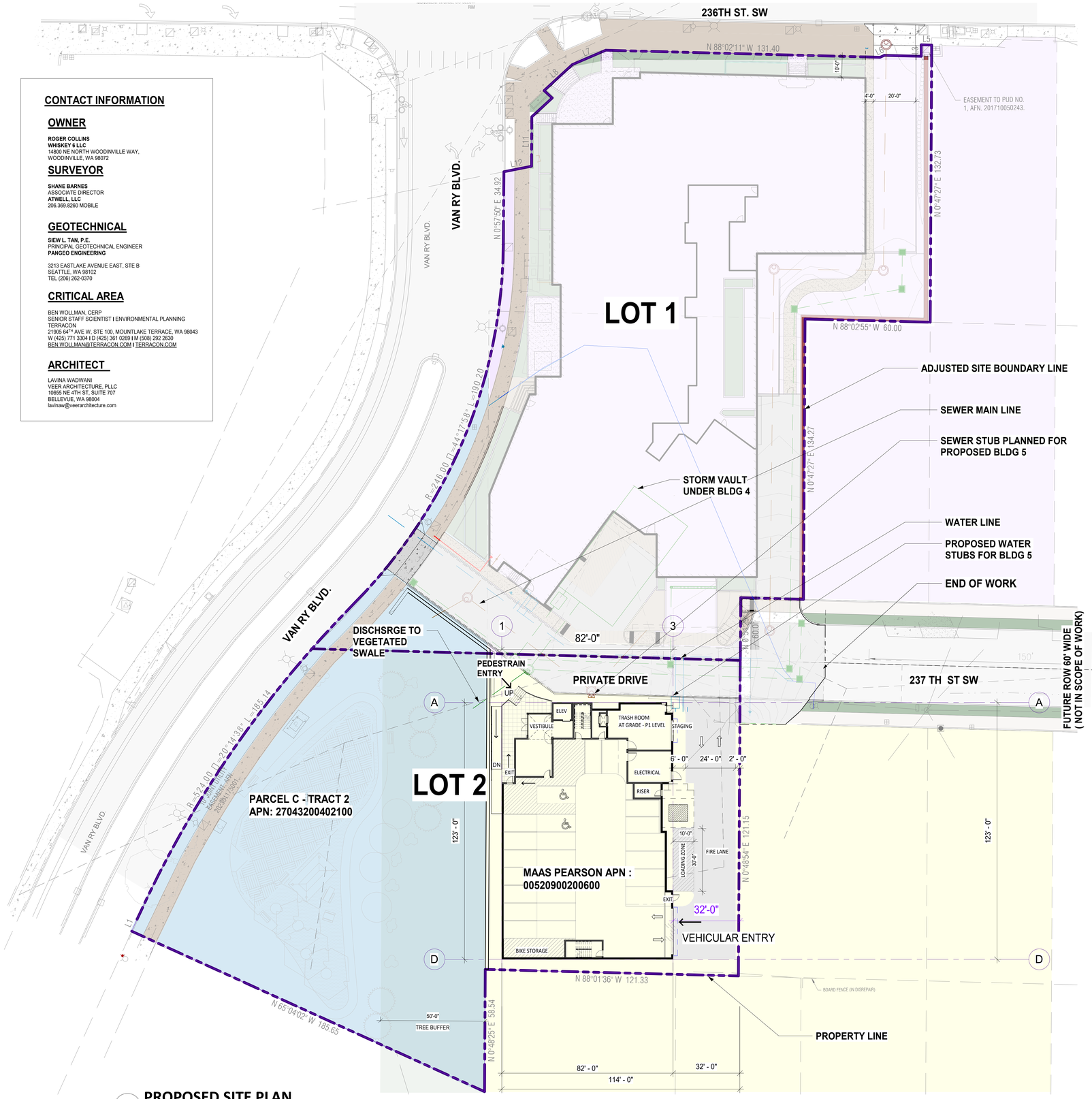

1 **PROPOSED SITE PLAN**

SCALE: 1" = 20'-0"

CONTACT INFORMATION

OWNER

ROGER COLLINS
WHISKEY 6 LLC
14800 NE NORTH WOODINVILLE WAY,
WOODINVILLE, WA 98072

SURVEYOR

SHANE BARNES
ASSOCIATE DIRECTOR
ATWELL, LLC
206.369.8260 MOBILE

GEOTECHNICAL

SIEW L. TAN, P.E.
PRINCIPAL GEOTECHNICAL ENGINEER
PANGEO ENGINEERING

3213 EASTLAKE AVENUE EAST, STE B
SEATTLE, WA 98102
TEL (206) 262-0370

CRITICAL AREA

BEN WOLLMAN, CERP
SENIOR STAFF SCIENTIST I ENVIRONMENTAL PLANNING
TERRACON
21905 64TH AVE W, STE 100, MOUNTLAKE TERRACE, WA 98043
W (425) 771 3304 I D (425) 361 0269 I M (508) 292 2630
BEN.WOLLMAN@TERRACON.COM I TERRACON.COM

ARCHITECT

LAVINA WADWANI
VEER ARCHITECTURE, PLLC
10655 NE 4TH ST, SUITE 707
BELLEVUE, WA 98004
lavinaw@veerarchitecture.com

THE SCOPE OF WORK DESCRIBES A COORDINATED, MULTI-PARCEL LAND-USE AND DEVELOPMENT PROPOSAL FOR A SPLIT-ZONED SITE LOCATED AT THE INTERSECTION OF VAN RY BOULEVARD AND 237TH STREET SW IN MOUNTLAKE TERRACE, WASHINGTON.

THE SITE SITS WITHIN THE TERRACE STATION TRANSIT-ORIENTED DEVELOPMENT (TOD) CORRIDOR, IMMEDIATELY ADJACENT TO THE MOUNTLAKE TERRACE LINK LIGHT RAIL STATION, AND IS IDENTIFIED IN THE CITY'S 2024 COMPREHENSIVE PLAN AS A PRIORITY AREA FOR INCREASED HOUSING DENSITY, MULTIMODAL CONNECTIVITY, AND NEIGHBORHOOD VITALITY.

THE PROPOSAL INVOLVES THREE DISTINCT BUT FUNCTIONALLY INTEGRATED COMPONENTS ACROSS A COMBINED SITE AREA OF APPROXIMATELY 2.21 ACRES, DIVIDED INTO 2 LOTS, FOLLOWING COMPLETION OF A BOUNDARY LINE ADJUSTMENT (BLA).

LOT 2 ,SOUTH LOT IS SPLIT ZONED AND BOTH ZONES REQUIRE ZONING MAP AMENDMENTS TO ALIGN WITH THEIR COMPREHENSIVE PLAN LAND USE DESIGNATIONS;
LOT 1 (THE NORTH LOT) WITH PROPOSED BLDG 4 FOOTPRINT - IS ALREADY APPROPRIATELY ALIGNED WITH TC1 ZONING AND REQUIRES NO CHANGE.

TOGETHER, THE TWO LOTS WILL DELIVER 288 NEW RESIDENTIAL UNITS, A SHARED PRIVATE DRIVE CONNECTION BETWEEN VAN RY BOULEVARD AND 237TH STREET SW, AND A LANDSCAPED COMMUNITY OPEN-SPACE PARK SERVING ALL RESIDENTS OF THE TERRACE STATION TOD NEIGHBORHOOD.

THIS APPLICATION IS SUBMITTED IN SUPPORT OF TWO CONCURRENT ZONING MAP AMENDMENT / REZONE APPLICATIONS ON LOT 2 - SOUTH LOT :

(1) A REZONE OF THE MAAS PEARSON PARCEL FROM SINGLE FAMILY RESIDENTIAL RS-4800 TO NEIGHBORHOOD MIXED USE (NMU), AND
(2) A REZONE OF PARCEL C FROM FREEWAY TOURIST (FT) TO GATEWAY MIXED USE (GMU).

THE NORTH LOT ZONED TOWN CENTER (TC1), IS NOT SUBJECT TO A REZONE REQUEST AND IS DESCRIBED HEREIN FOR CONTEXT ONLY.

Site Summary Table

SITE DEVELOPMENT	Parcel / APN	Area	Current Zone	Proposed Zone	Proposed Use
LOT 1 – NORTH Building 4	Parcels A & B APNs ...201100 & ...201600	53,182 SF (~1.22 ac)	TC1 (Town Center)	TC1 (No change)	7-story multifamily 223 units
LOT 2 – SOUTH LOT Building 5 (MAAS Pearson)	APN 00520900200600	~0.45 ac	RS-4800 (Single Family)	NMU (Neighborhood Mixed Use)	7-story multifamily 65 units
Community Park (Parcel C)	APN 27043200402100	~0.6 ac	FT (Freeway Tourist)	GMU (Gateway Mixed Use)	Landscaped open space / greenway
TOTAL SITE	2 LOTS	~2.21 ac	TC1 / RS-4800 / FT	TC1 / NMU / GMU	**288 units + open space**

HALF TONE- LOT 1 IS NORTH LOT - ADDED FOR CONTEXT

THIS PERMIT COVERS THE CONNECTION BETWEEN VAN RY BLVD & 237TH STREET VIA A PRIVATE 24' WIDE DRIVE & PROPOSED 223 MULTIFAMILY PROPOSED

LOT 2 (SOUTH LOT) = 42,549 SF - ZONING AMENDMENT TO REZONE

PARCEL NUMBERS

APN 00520900200	SINGLE FAMILY RS 4800	REZONE TO	NMU (NEIGHBORHOOD MIXED USE) TO BUILD MULTIFAMILY - BUILDING 5
APN 27043200402100	FREEWAY TOURIST ZONE (FT)	REZONE TO	GMU(GATEWAY MIXED USE) WILL BE OPEN SPACE - PARK

RS - 4800

MAAS PEARSON (ASSESSORS PARCEL NO 00520900200600
PROPOSED 6 STORY MULTIFAMILY WITH PARKING

FT ZONE

PARCEL C (ASSESSORS PARCEL NO 27043200402100
60' TREE BUFFER & LANDSCAPED AREA FOR COMMUNITY

TC-1 ZONE

PROJECT DATA - 6 STORY MULTIFAMILY - UNDER NEW ZONING - NMU

CURRENT ZONING - SINGLE FAMILY RS-400
NEW ZONING APPROVED COMPREHENSIVE PLAN - NEIGHBORHOOD MIXED USE

PARKING/ ENTRY LEVEL - 9,444 SF
RESIDENTIAL LEVEL 1-5 = 8850 X5 = 44, 250 SF
TOTAL GROSS AREA = 53, 694 SF

TOTAL RESIDENTIAL UNITS - 65 UNITS
13 UNITS PER FLOOR
TOTAL PARKING STALLS = 23

0' 10' 20' 40' 80'

TERRACE STATION - TOD DEVELOPMENT - LOT 2 - REZONE

4/27/2026

veer ARCHITECTURE PLLC

P-PPR-26-0016

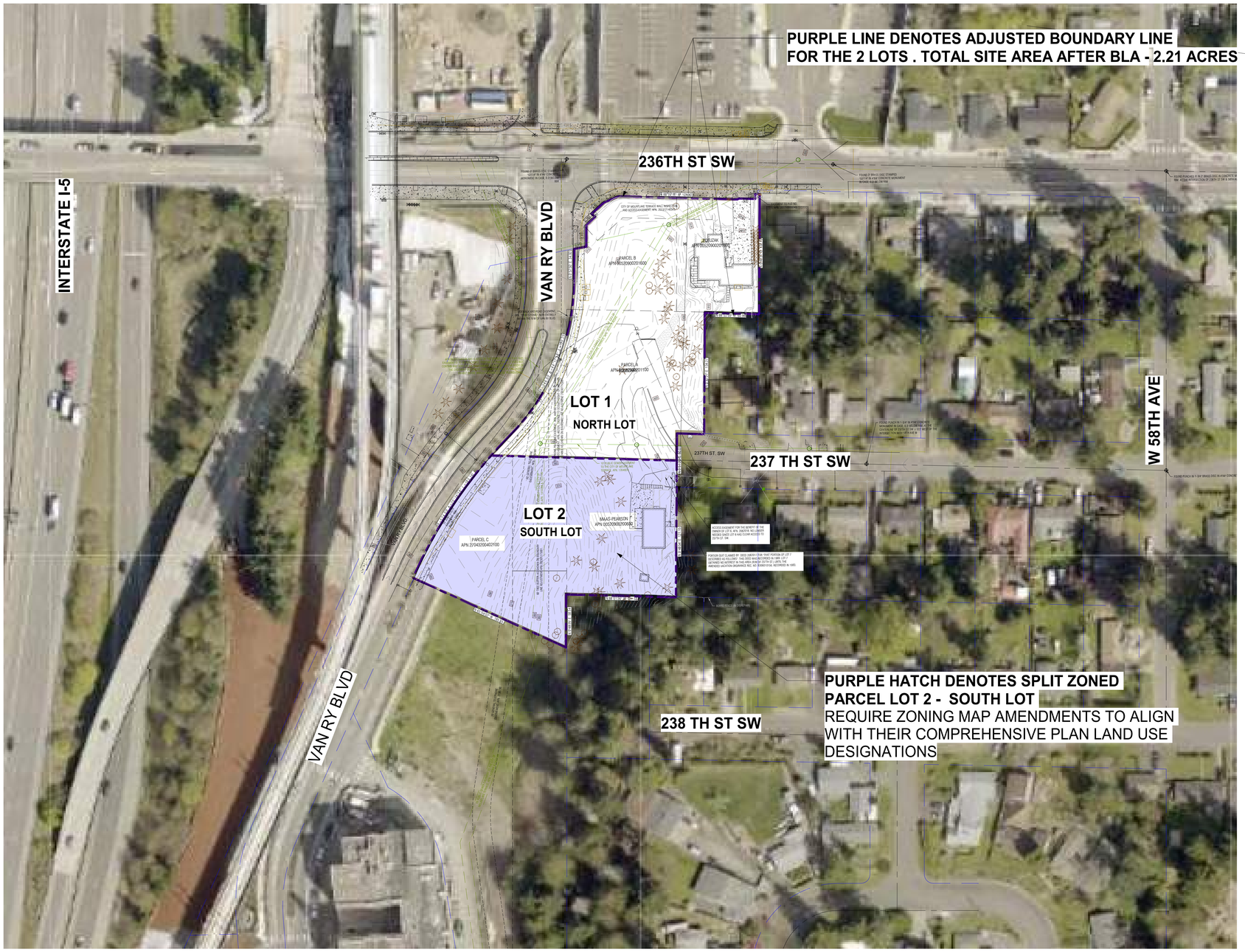

1 **SITE VICINITY MAP**

SCALE: 1" = 50'-0"

0' 10' 20' 40' 80'

PROJECT DATA SUMMARY

PROJECT ADDRESS: SITE LOCATED AT INTERSECTION OF VAN RY & 2 237TH STREET SW, MOUNTLAKE TERRACE, WA 98043

TOTAL SITE AREA: APPROXIMATELY 2.21 ACRES (95,730 SF PER SURVEY)

LOT 1 - NORTH LOT — BUILDING 4: 53,182 SF ~1.22 AC | TC1 ZONE | 7 STORIES | 223 UNITS | 223+ PARKING STALLS | NO REZONE

LOT 2 - SOUTH LOT : 42, 549 SF
— BUILDING 5 (MAAS PEARSON): ~0.45 AC | RS-4800 → NMU | 7 STORIES | 65 UNITS | 23 PARKING STALLS | REZONE REQUIRED

SOUTH LOT — COMMUNITY PARK (PARCEL C): ~0.6 AC | FT → GMU | OPEN SPACE / PARK | REZONE REQUIRED

TOTAL RESIDENTIAL UNITS: 288 UNITS (223 + 65)

LOT 2 (SOUTH LOT) = 42,549 SF - ZONING AMENDMENT TO REZONE

APN 00520900200 SINGLE FAMILY RS 4800 REZONE TO NMU (NEIGHBORHOOD MIXED USE)

APN 27043200402100 FREEWAY TOURIST ZONE (FT) REZONE TO GMU(GATEWAY MIXED USE)

LEGAL DESCRIPTION:

MAAS/PEARSON
LOTS 6 AND 7, BLOCK 2, MOUNTLAKE TERRACE, DIVISION NO. 5, ACCORDING TO THE PLAT THEREOF RECORDED IN VOLUME 13 OF PLATS, PAGE 39, RECORDS OF SNOHOMISH COUNTY, WASHINGTON;
EXCEPT THE EAST 30 FEET OF SAID LOT 7;
EXCEPT THAT PORTION OF LOT 7 CONVEYED TO THE EDMONDS SCHOOL DISTRICT NO. 15 BY DEED RECORDED UNDER AUDITOR'S FILE NO. 2082017.
TOGETHER WITH THAT PORTION OF VACATED 237TH STREET SOUTHWEST BY THE CITY OF MOUNTLAKE TERRACE ORDINANCE RECORDED UNDER AUDITOR'S FILE NO. 8306010156 THAT WOULD ATTACH BY OPERATION OF LAW.
ALL SITUATE IN THE COUNTY OF SNOHOMISH, STATE OF WASHINGTON

PARCEL C (ASSESSORS PARCEL NO. 27043200402100)
TRACT 2, BOUNDARY LINE ADJUSTMENT & RECORD OF SURVEY NO. PLL-22-0002, RECORDED UNDER RECORDING NO. 202301175001, RECORDS OF SNOHOMISH COUNTY, WASHINGTON, BEING A PORTION OF THE SOUTHEASTER QUARTER OF SECTION
32, AND A PORTION OF THE SOUTHWEST QUARTER OF SECTION 33, ALL IN TOWNSHIP 27 NORTH, RANGE 4 EAST, W.M., IN SNOHOMISH COUNTY, WASHINGTON

TERRACE STATION - TOD DEVELOPMENT - LOT 2 - REZONE

4/27/2026

veer ARCHITECTURE PLLC

P-PPR-26-0016

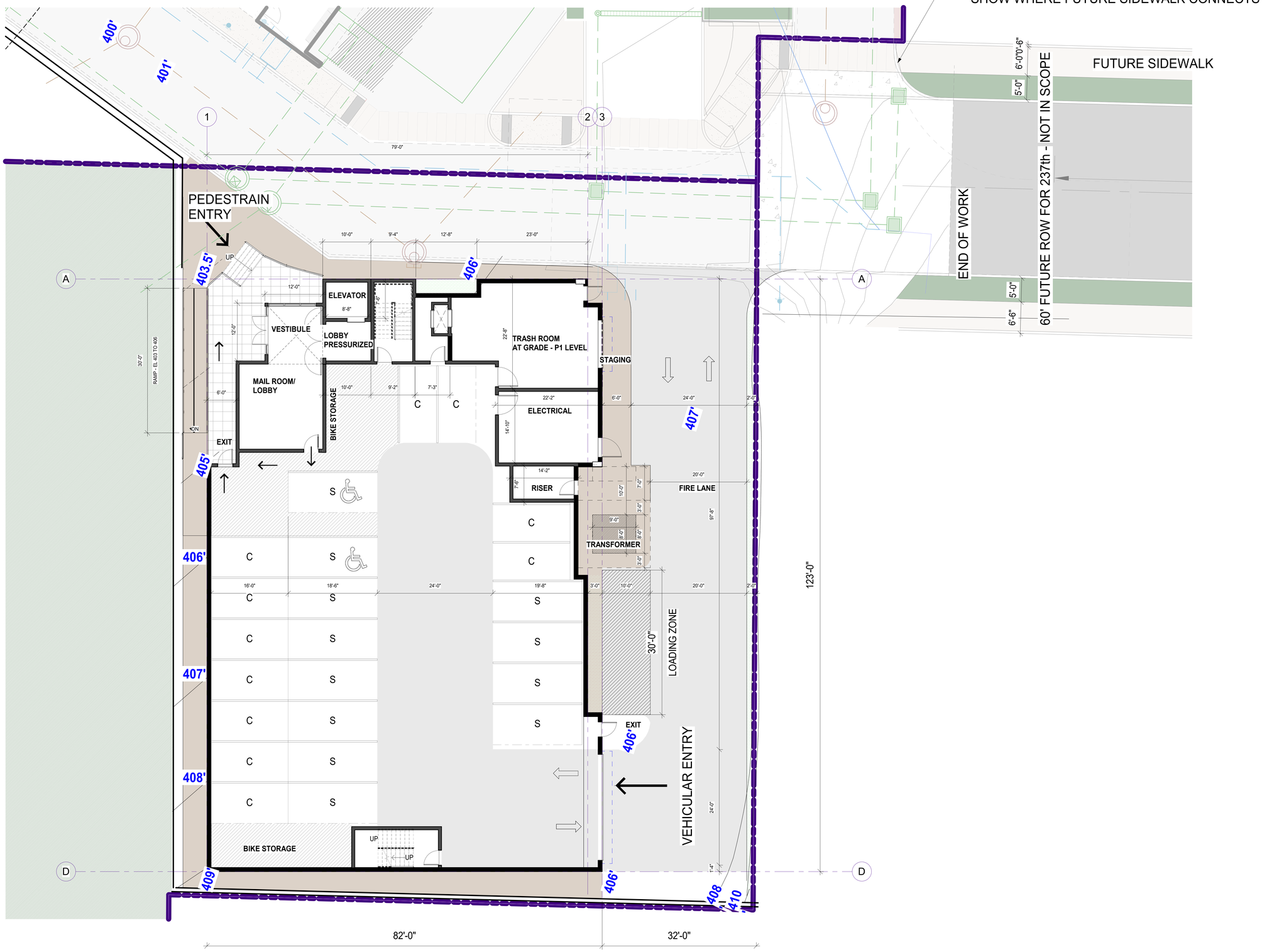

1 **BLDG 2 - P1/ ENTRY LEVEL - ELEV 406'**

SCALE: 1/8" = 1'-0"

TERRACE STATION - TOD DEVELOPMENT - LOT 2 - REZONE

4/27/2026

veer ARCHITECTURE PLLC

P-PPR-26-0016

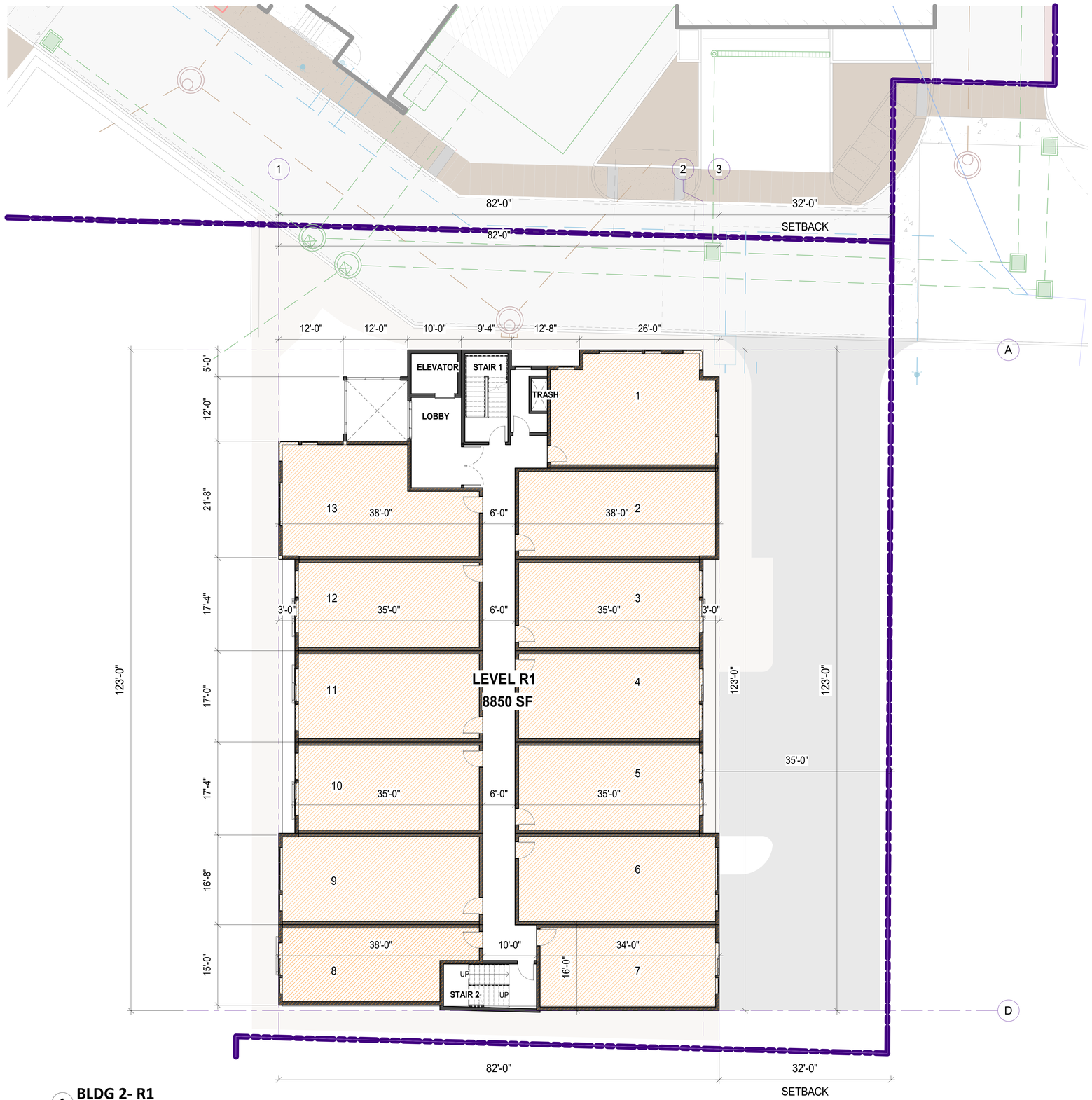

1 **BLDG 2- R1**

SCALE: 1/8" = 1'-0"

TERRACE STATION - TOD DEVELOPMENT - LOT 2 - REZONE

4/27/2026

veer ARCHITECTURE PLLC

P-PPR-26-0016

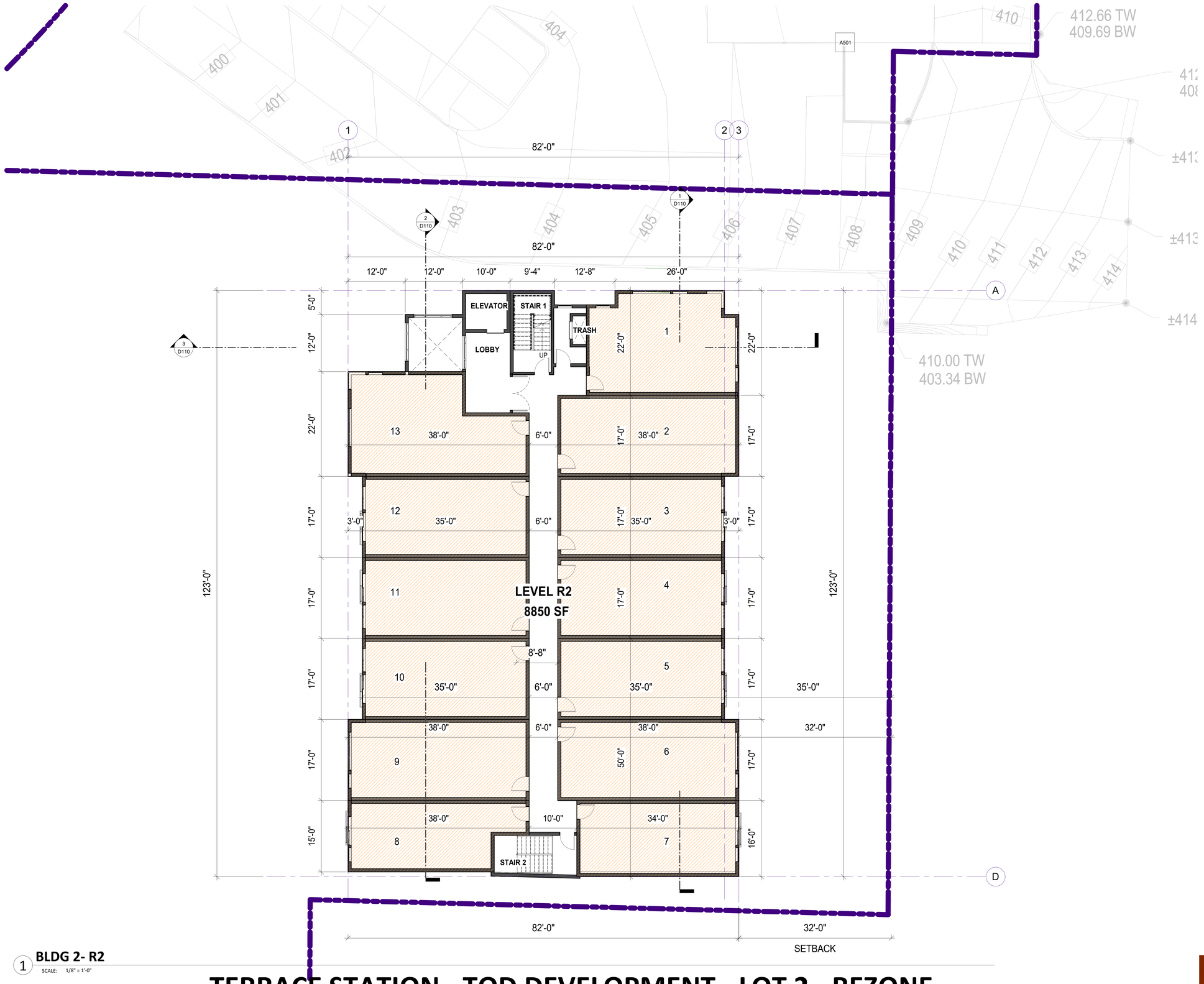

1 **BLDG 2- R2**

SCALE: 1/8" = 1'-0"

TERRACE STATION - TOD DEVELOPMENT - LOT 2 - REZONE

4/27/2026

veer ARCHITECTURE PLLC

P-PPR-26-0016

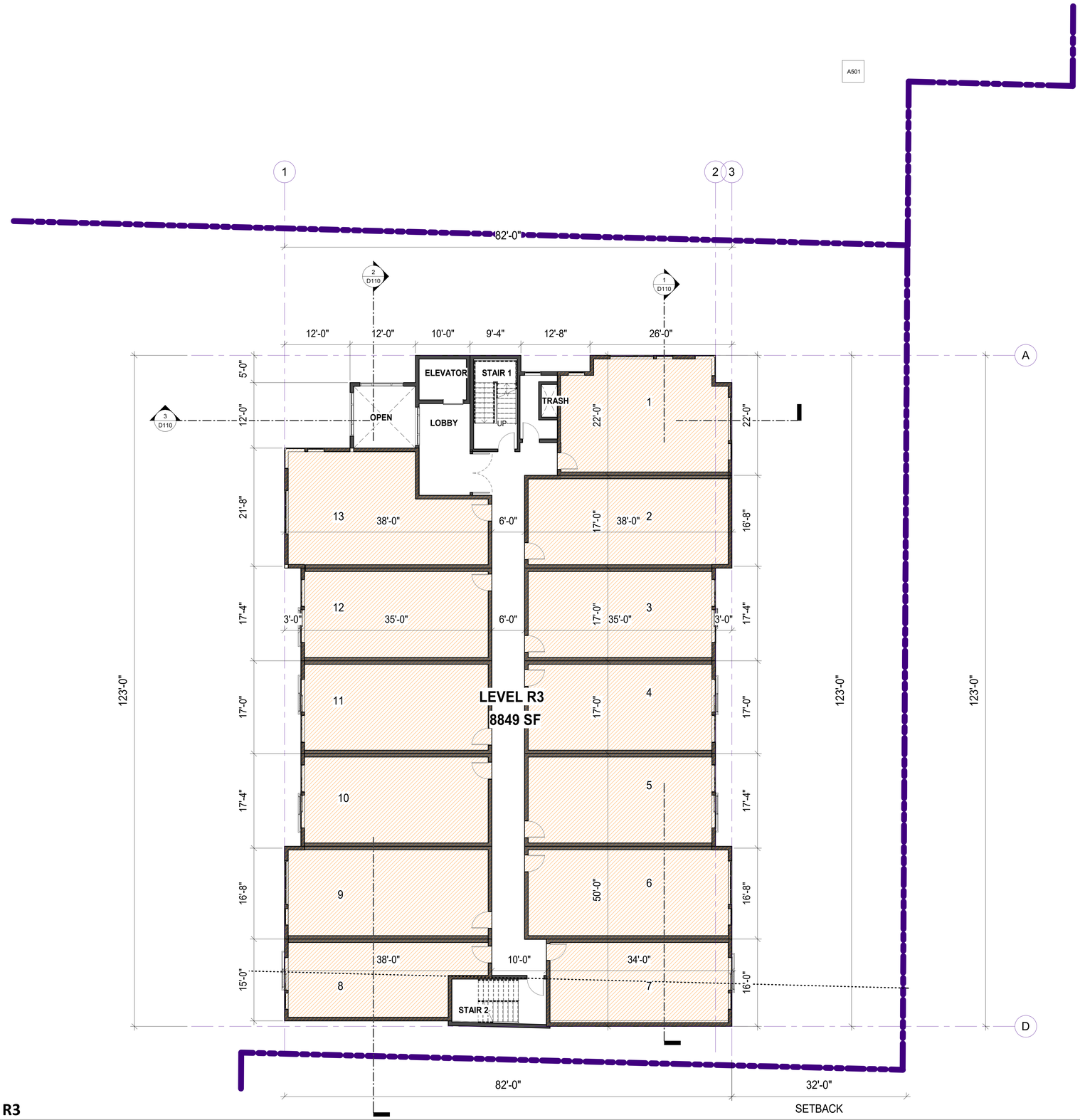

1 **BLDG 2 - R3**

SCALE: 1/8" = 1'-0"

TERRACE STATION - TOD DEVELOPMENT - LOT 2 - REZONE

4/27/2026

veer ARCHITECTURE PLLC

P-PPR-26-0016

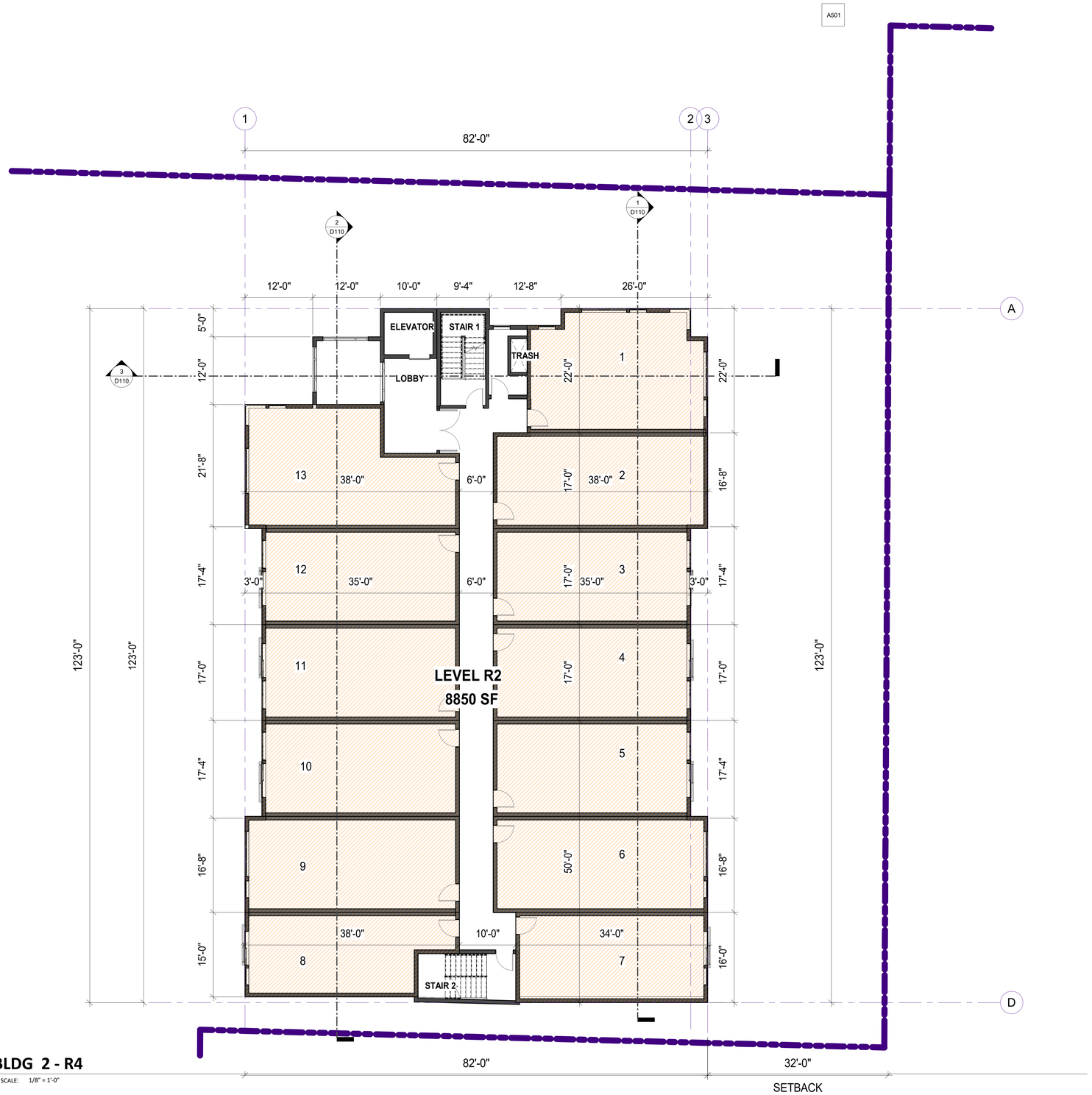

1 **BLDG 2 - R4**

SCALE: 1/8" = 1'-0"

TERRACE STATION - TOD DEVELOPMENT - LOT 2 - REZONE

4/27/2026

veer ARCHITECTURE PLLC

P-PPR-26-0016

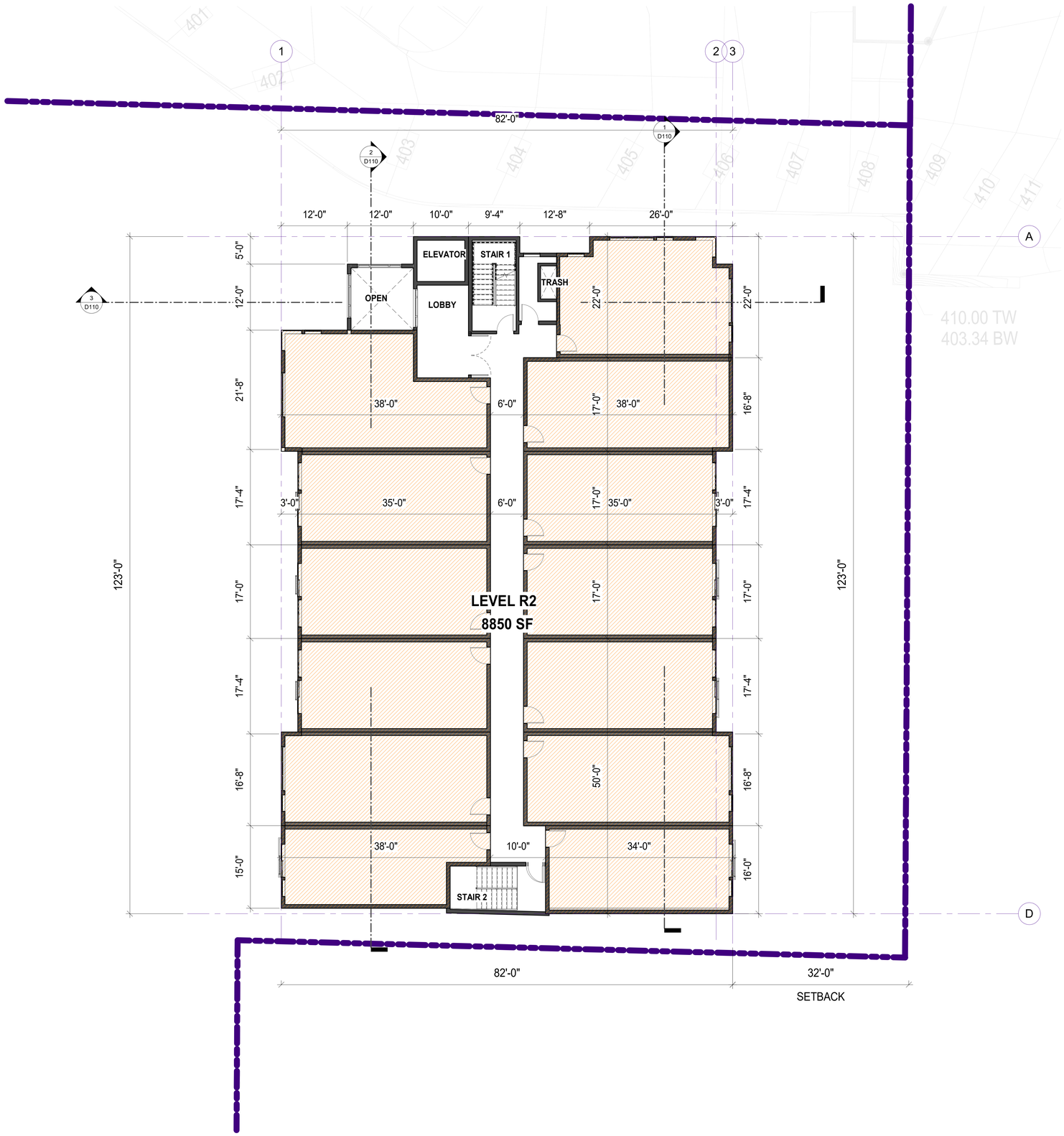

1 **BLDG 2 - R5**
SCALE: 1/8" = 1'-0"

TERRACE STATION - TOD DEVELOPMENT - LOT 2 - REZONE

4/27/2026

veer ARCHITECTURE PLLC

P-PPR-26-0016

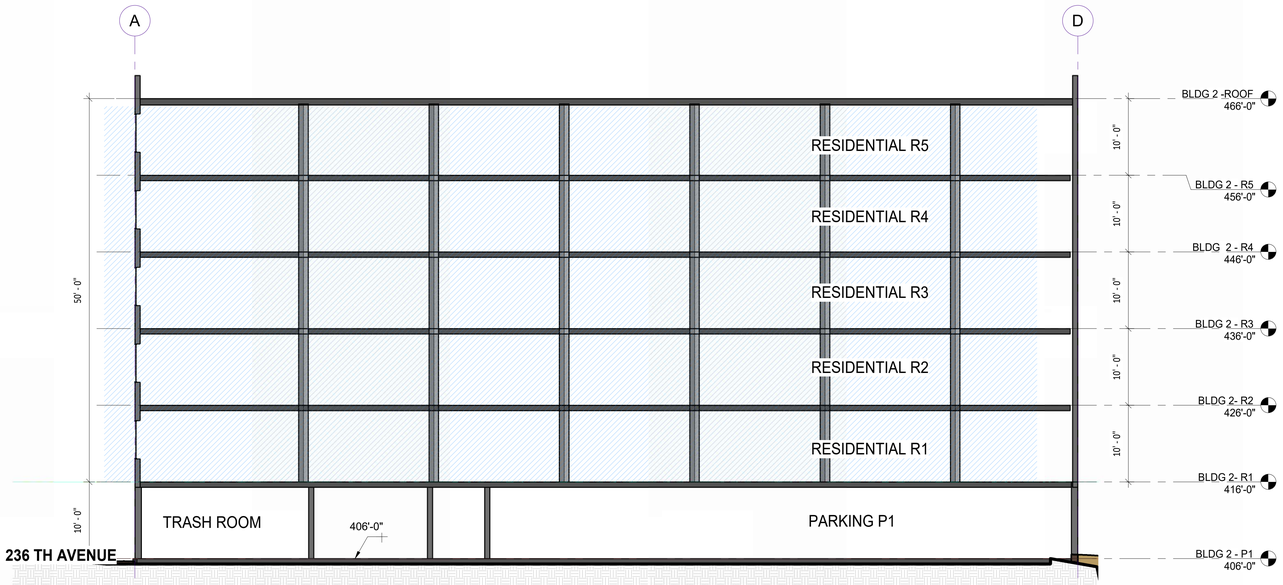

1 **SECTION AT PARKING ENTRY @ 406'**

SCALE: 1/8" = 1'-0"

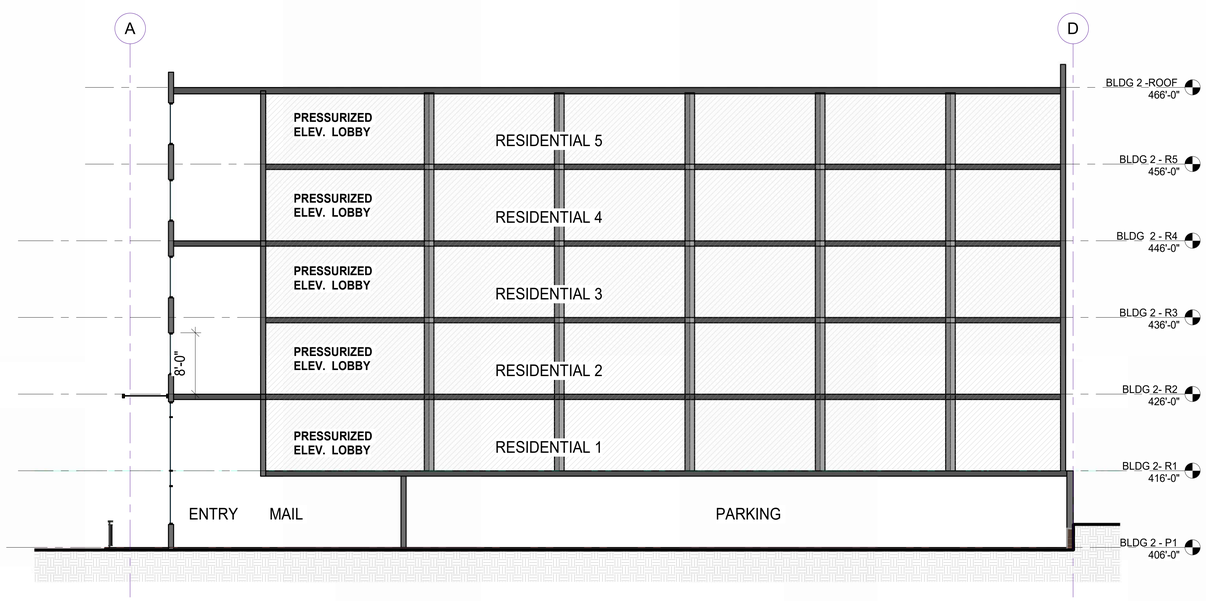

2 **SECTION AT PEDESTRAIN ENTRY - LOBBY**

SCALE: 1/8" = 1'-0"

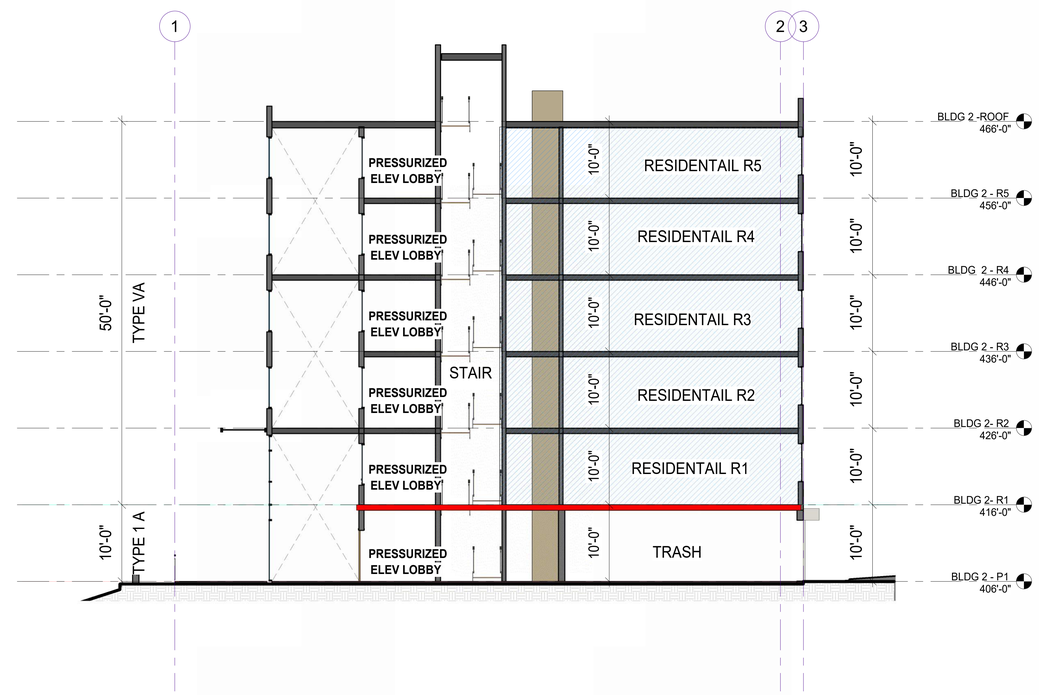

3 **EAST- WEST SECTION**

SCALE: 1/8" = 1'-0"

TERRACE STATION - TOD DEVELOPMENT - LOT 2 - REZONE

4/27/2026

veer ARCHITECTURE PLLC

P-PPR-26-0016

1 **NW CORNER VIEW**
SCALE:

TERRACE STATION - TOD DEVELOPMENT - LOT 2 - REZONE

4/27/2026

veer ARCHITECTURE PLLC

P-PPR-26-0016

Permit #
PSN-20-0001

TERRACE STATION

Master Sign Plan

Building 1
24000 Van Ry Blvd
Mountlake Terrace, WA 98043

Building 2
24015 Van Ry Blvd
Mountlake Terrace, WA 98043

Building 3
23905 Van Ry Blvd
Mountlake Terrace, WA 98043

A DESIGN STUDIO

TABLE OF CONTENTS

PAGE #	DESCRIPTION
ii	NARRATIVE **ii.** Narrative (Sign Types) **iii.** Sign Placement & Descriptions **iii.** Definitions **iv.** Vicinity Map **v.** Site Plan Map **vi.** Responses to Binding Site Plan, COA #21 **viii.** Consistency with MTMC 19.135.100 (C)
ix	RETAIL SIGN CRITERIA **x.** Retail Signage Criteria **x.** Types of Signs Permitted **x.** Size of Signs **xi.** Sign Content Permitted **xii.** Signs not Permitted **xiii.** Sign Guidelines **xiv.** General Standards of Quality **xv.** Submittal for Building Owner Approval **xv.** Failure to Comply **xvi.** Retail Tenant Responsibilities **xvi.** Sign Maintenance **xvii.** Specific Signage Guidelines
01	BRAND STANDARDS
02	SIGN STANDARDS
03	SIGN SCHEDULE **03:** Building 1: S04-S023 **03-04:** Building 2: S24- S40 **04-05:** Building 3: S41- S62 **05:** Monument / Directional Signage
06	SITE PLANS **06:** Overall Vicinity Map **07:** North Section **08-09:** Overall (Sign & Building Legend Color Key) **10:** Building 1 (B1) - Site Plans **11:** Building 2 (B2) - Site Plans **12:** Building 3 (B3) - Site Plans
13	BUILDING 1 – TERRACE STATION WEST **14:** Building 1 (B1) - Site Plans **15-19:** B1 Perspective Views **20-27:** B1 Elevations **28:** B1 Sign Schedule **29-43**: B1-S01 through S06 **44-53**: B1-S07 through S09.1 **54-71:** B1-S10 through S15 **72-81**: B1-S16 through S20 **82-87:** B1-S21 through S23
88	BUILDING 2 – TERRACE STATION EAST **89:** Building 2 (B2) - Site Plans **90-92:** B2 Elevations **93:** B2 Sign Schedule **94-111:** B2-S24 through B2-S30 **112-134:** B2-S31 through B2-S41
135	BUILDING 3 - TRAXX AT TERRACE STATION **136:** Building 3 (B3) - Site Plans **137-139:** B3 Elevations **140:** B3 Sign Schedule **141-160:** B3-S42 through B3-S50 **161-180:** B3-S51 through B3-S60 **181-194:** B3-S61 through B3-67
195	MONUMENTS & DIRECTIONALS **196-197:** Site Plans **198:** Sign Schedule **199-214:** D-S68 through D-S77

A DESIGN STUDIO

MAIN CONTACT
Gracia Mueller
360.929.3077

CREATIVE
Brody Lund
425.359.7380

Additional information:
adesignstudioseattle.com

Follow us on social:
@adesignstudioseattle

COPYRIGHT
All artwork contained herein is the copyrighted property of A Design Studio Seattle. This includes, but is not limited to, logos, specifications, artwork and engineering. Any usage beyond internal reviews shall require our appoval and a separate design fee paid to A Design Studio Seattle. Usage rights can also be purchased (limited or complete) for an additional fee. Any unlawful distribution of said artwork is a violation of federal copyright laws.

PROJECT NAME
Terrace Station

PROJECT #
20-004

ADDRESS
Address Varies
Mountlake Terrace, WA 98043

DATE
08/05/20

VERSION NOTES

V1	07/14 Concept design
V2	07/31 Revise signs
V3	08/06 Revise signs
V4	08/22 Revise signs
V5	10/02 Revise signs
V6	11/19 Revise signs
V7	01/02 Revise signs
V8	02/20 Revise all concepts & signs
V9	02/24 Revise signs
V10	03/19 Add signs, revise narrative
V11	05/19 Add/revise signs, revise all B3
V12	05/22 Revise B3 & directional signs
V13	06/02 Revise B1 canopy details
V14	08/05 Revise per city comments
V15	

PAGE SCALE
As Noted

PAGE #
i

NARRATIVE

MOUNTLAKE TERRACE GATEWAY TOD, NOW KNOWN AS TERRACE STATION

Bldg 1 - 24000 Van Ry Blvd
Bldg 2 – 24015 Van Ry Blvd
Bldg 3 – 23905 Van Ry Blvd

Written narrative describing and defining, but not limited to, the following:

All sign materials must be consistent with the design theme, enhancing the building, and storefronts and evoking a positive retail image. Due to the variety of architectural treatments within the development, each building and tenant storefront sign should be carefully considered in relationship to its particular location. What may be appropriate in one location may not work in another. Each proposed sign will be evaluated on its originality and compatibility with neighboring signs as well as its overall image within the Terrace Station Binding Site Plan development. All proposed signage is to be reviewed by, and concurred to by, the underlying building/property owner.

Terrace Station in Mountlake Terrace in the Freeway/Tourist Zone is a multi-building complex comprised of three separate buildings , building parcels (Buildings 1, 2 and 3), and four tracts including Van Ry Blvd (Tract 4), see Site Plan Map. The site is to be developed as a transit-oriented development due to its close proximity to the existing Community Transit Center and planned light rail station just a hundred feet or so from the northwest corner of the site. An intervening gateway plaza is planned between the station proper and the TOD site creating a seamless pedestrian connection to the site for those arriving or departing by light rail. All three buildings are planned mixed use residential with retail on the bottom level of all three buildings which will serve the pedestrian-oriented site. Terrace Station is designed and developed to act as the new building standard for Mountlake Terrace, giving the city a new thoughtfully planned and designed community. The building site is essentially the entrance to the city with its location just off the I-5 corridor. The signage was also designed and developed to fit with this standard using an upscale and thoughtfully planned approach which fits with the overall branding of Terrace Station.

Signage is a necessary element to a project of this nature. It is meant to identify the brand, identify the buildings, identify wayfinding and parking as well as identify retail tenants throughout. Due to the nature of a complex of this size and scope inadequate signage of the project lends to confusion and frustration of patrons and visitors of the complex. Our intent was to provide the right amount of signage both with respect to location and visibility to offer both vehicles and pedestrians ease to travel throughout and to provide adequate direction to the parking entries of the 3 buildings.

There are three identifiable categories of signage at Terrace Station throughout the three-building complex which are meant to work together throughout the site. All three buildings will have a similar look and feel built into the signage plan.

The first category are Building Identification signs. The Building Identification signs are for the primary purpose of identifying the buildings. The buildings are named Terrace Station East, Terrace Station West and potentially Traxx (however this name may change pending branding). The Building Identification signs are placed on the building canopies at the entrances as well as signs placed on the upper level sunshades for building one that are visible from I-5. Building Identification signs are meant to reinforce branding and to identify each separate building.

The second category of signs are Retail Signage. The retail signage is also placed on the entrance canopies and walls to clearly identify the retail tenants of the complex. See the retail tenant guidelines on page 191-192 of the comprehensive sign plan as well as the Retail Sign Criteria that speaks at length to the approvals and conditions of retail signage. Cornerstone retail tenants will be afforded additional signage locations where on a corner of a building.

The third category of signs are directional and parking signage. Signage is placed for vehicles to clearly find the parking garage entries for all 3 buildings and will be used to identify residential and retail parking. These signs are primarily comprised of blade signage directing to the entrances to the parking garages and overhead signage at parking entrances notifying patrons to the site of Residential and Public parking. We have chosen to incorporate monument signage for a consistent and long-lasting way to direct patrons to the 3 separate buildings. We feel that with the size and scale of the site as well as the need to direct to parking garages, this approach was best and most recognizable also offering a clean and consistent look.

SIGNAGE PLACEMENT & DESCRIPTIONS

MONUMENT SIGNS: The placement of the signs for Terrace Station were thoughtfully considered for both vehicular, pedestrian and wayfinding throughout the multi building premises. This project will consist of both residential tenants as well as retail tenants. Based on the pedestrian connection of the site, signage was carefully placed through the project not only for building and site identification, but also so that various visitors of the premises would also find and easily travel throughout. These signs were placed to facilitate both vehicular and pedestrian wayfinding.

WALL SIGNS: Wall signs are placed to both catch the attention of vehicular and pedestrian traffic. Where a retail wall sign is used, it is required that only upscale signage design and materials are used. See retail tenant sign criteria. Thin oversized raceways are to be placed behind the channel letter or push through acrylic sign and the raceway will be painted to match exactly to the building façade.

PARKING SIGNS: Directional parking signage is used to direct vehicles to the building parking garages. Blade type signs are designed to fit with the overall look and brand of the project and are minimal in size but large enough to catch the attention of passing vehicles. Wall sign garage entry signs are placed to further direct patrons of the complex to the appropriate either retail or residential parking entries.

SIGN SIZES: Sign sizes are all meant to fit both with visitors finding and clearly identifying the project both in a car as well as on foot. Signs are designed to fit within the scale with the size and architecture of the buildings. The shape size and orientation of the signage for the building were specifically designed to blend with the architectural lines of the building and setting and to attract motorists to the site by way of the orientation of the signage. Letter and logo heights were designed to be readable for the viewing distances for vehicular traffic.

BRANDING: Physical components of the signage include branded but muted color schemes that blend with the color schemes of the building. The signage is meant to blend well with the surroundings and landscaping. No bright or outlandish colors are used. Soft blue/grays and golds are the primary color scheme to fit well within the northwest backgrounds. Signage and branding is designed to convey an old world look and feel. With the close proximity of the light rail station, signage was designed to fit a "train depot" aesthetic.

LANDSCAPING: Landscaping will be used at each freestanding monument sign to further blend the sign with the surroundings of the buildings. All signage attachments and raceways will be painted to match building facades and canopies so that they go away and are minimally visible.

BUILDING IDENTIFICATION: Building identification signage was designed as open pan channel with skeleton neon to further relate to the old world look and feel. Additional signs where illuminated on the project will be LED illumination which will be either halo lit or face lit with push through acrylic which offers a much softer glow that typical face lit channel letter illumination. No obtrusive, flashing or bright lighting has been designed into the signage and will also not be allowed for retail tenant signage.

DESIGN INTENT: Design intent has been spoken of in previous context, but again thoughtful consideration of materials, construction, architectural integration and colors were considered when designing the signage package as a whole. This signage package is meant to be cohesive and upscale in nature. Signage materials are primarily metals where necessary for structure and durability. Sign colors are meant to blend with the project with soft nods to the individual brand of the buildings. Signage throughout Terrace Station is meant to be customized to integrate the brand identity, architectural elements and environment with which the signs are placed throughout the project.

DEFINITIONS, DEFINE SIGN TYPES

Wall sign: Any sign attached to a wall.

1. Cabinet Sign: means an internally illuminated sign in which a removable sign face (usually with a translucent sign graphics) is enclosed on all edges by a cabinet of a, typically met is enclosed on all edges by a metal cabinet.

Canopy Sign: Any sign that is attached directly to a canopy, where canopy is typically extending from face of building to provide pedestrian weather protection.

Monument Sign: Means a sign that rests on the ground and is permanently mounted on the ground.

Blade Sign: Any sign that projects perpendicular from the building.

Parapet Sign: We defined the signs that are attached to the upper level sunshade as a parapet sign for lack of a better definition.

Banner Sign: Any sign made of banner type material.

Building ID Signage: meaning signs that are shown to have the building names.

Parking Signage: Any sign in which to help guide vehicles to the parking garages.

Retail Signage: Any sign that will be for a retail tenant.

Sign Area: The sign area calculated by drawing a box around letters or words when the text is push-through or mounted, otherwise the entire sign structure is the counted as sign area.

Directional Signage: Any signage that is used for the purpose of directing vehicles or pedestrians around the site and to one of the 3 buildings on the site. Includes the Terrace Station monument signs.

Wall Sign: Means any sign attached directly to and supported by a wall, facade, roof, or edge of marquee, with the exposed face of the sign on a plane parallel to the portion of the building to which it is attached, and projecting no more than one foot and is not a blade sign.

Wall Area and Wall Sign Area: For the purposes of calculating the allowed square footage of a wall sign, the wall area is the length of the tenant's wall space on a single plane times the height of the tenant wall space. Tenant space height is from floor elevation to platform of ceiling and length is the width of the space between centerlines of "side" walls. Corner spaces cannot add together multiple wall planes to determine the allowed wall sign area on a single plane of the tenant's space.

NARRATIVE

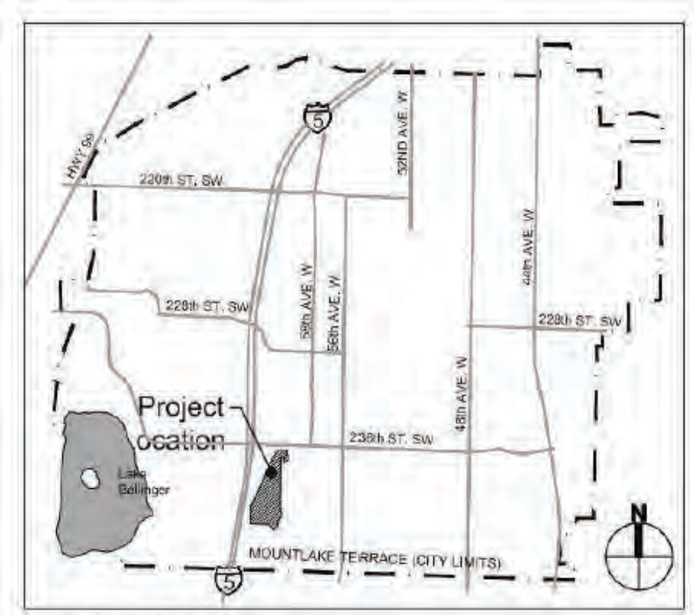

VICINITY MAP

LEGAL DESCRIPTION:

PARCEL 8 OF MLT ENTERPRISES BINDING SITE PLAN, RECORDED UNDER AUDITOR'S FILE NO. 9311045003. BEING A PORTION OF THE SOUTHEAST QUARTER OF SECTION 32, AND A PORTION OF THE SOUTHWEST QUARTER OF SECTION 33, ALL IN TOWNSHIP 27 NORTH, RANGE 4 EAST, W.M.

SITUATE IN THE COUNTY OF SNOHOMISH, STATE OF WASHINGTON

TAX ID:

TAX LOT 270432-004-013-00
PARCEL 8: TAX LOT 270432-004016-00
EDMONDS SCHOOL DISTRICT NO. 15: TAX LOT 270432-004-007-00

MOUNTLAKE TERRACE GATEWAY TOD

PROJECT INFORMATION:

PROJECT ADDRESS:

Building 1
24000 Van Ry Blvd
Mountlake Terrace, WA 98043

Building 2
24015 Van Ry Blvd
Mountlake Terrace, WA 98043

Building 3
23905 Van Ry Blvd
Mountlake Terrace, WA 98043

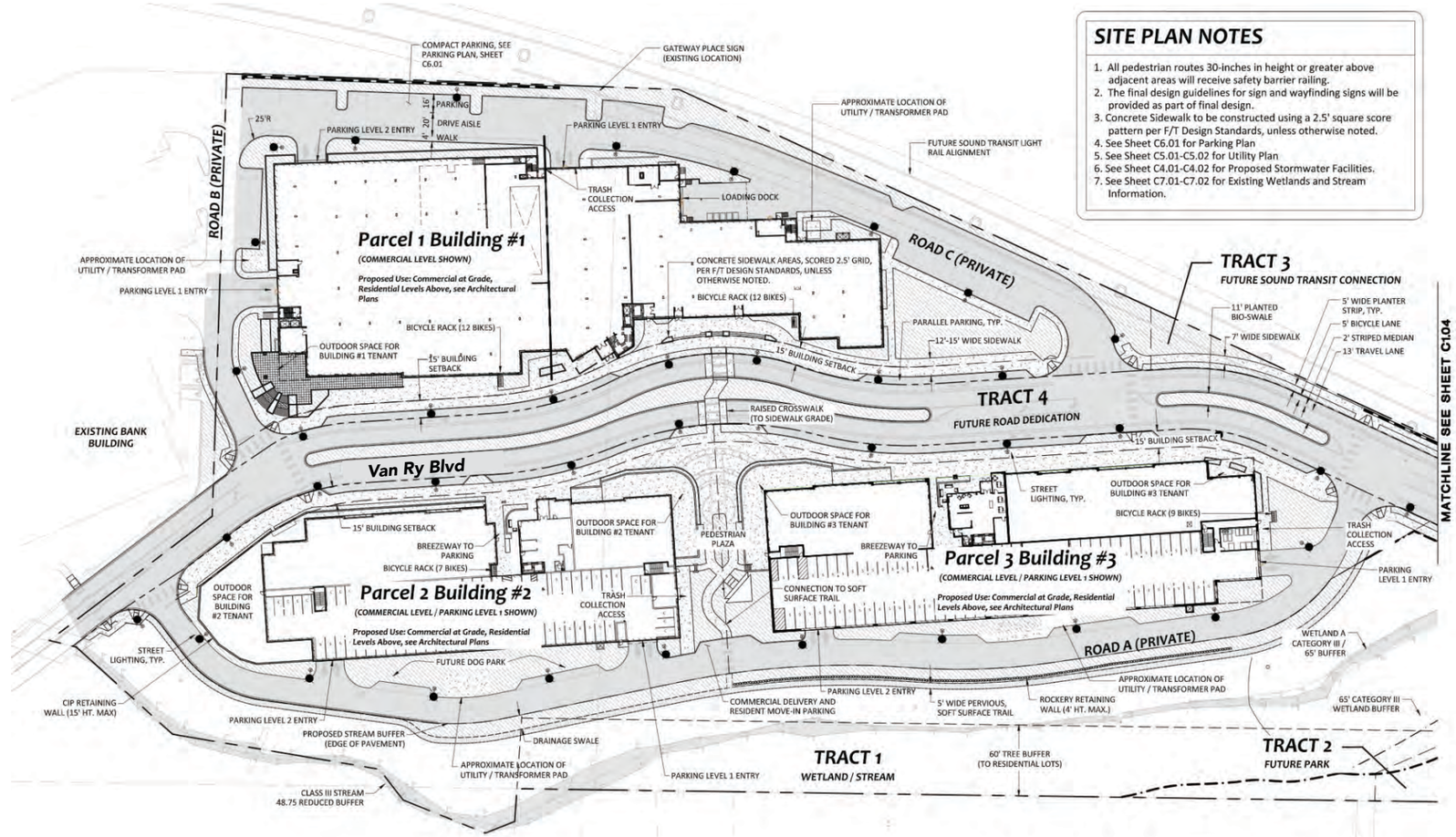

SITE PLAN NOTES

1. All pedestrian routes 30-inches in height or greater above adjacent areas will receive safety barrier railing.
2. The final design guidelines for sign and wayfinding signs will be provided as part of final design.
3. Concrete Sidewalk to be constructed using a 2.5' square score pattern per F/T Design Standards, unless otherwise noted.
4. See Sheet C6.01 for Parking Plan
5. See Sheet C5.01-C5.02 for Utility Plan
6. See Sheet C4.01-C4.02 for Proposed Stormwater Facilities.
7. See Sheet C7.01-C7.02 for Existing Wetlands and Stream Information.

NARRATIVE

COLOR KEY
LOCATIONS PER BSP
NEW LOCATIONS

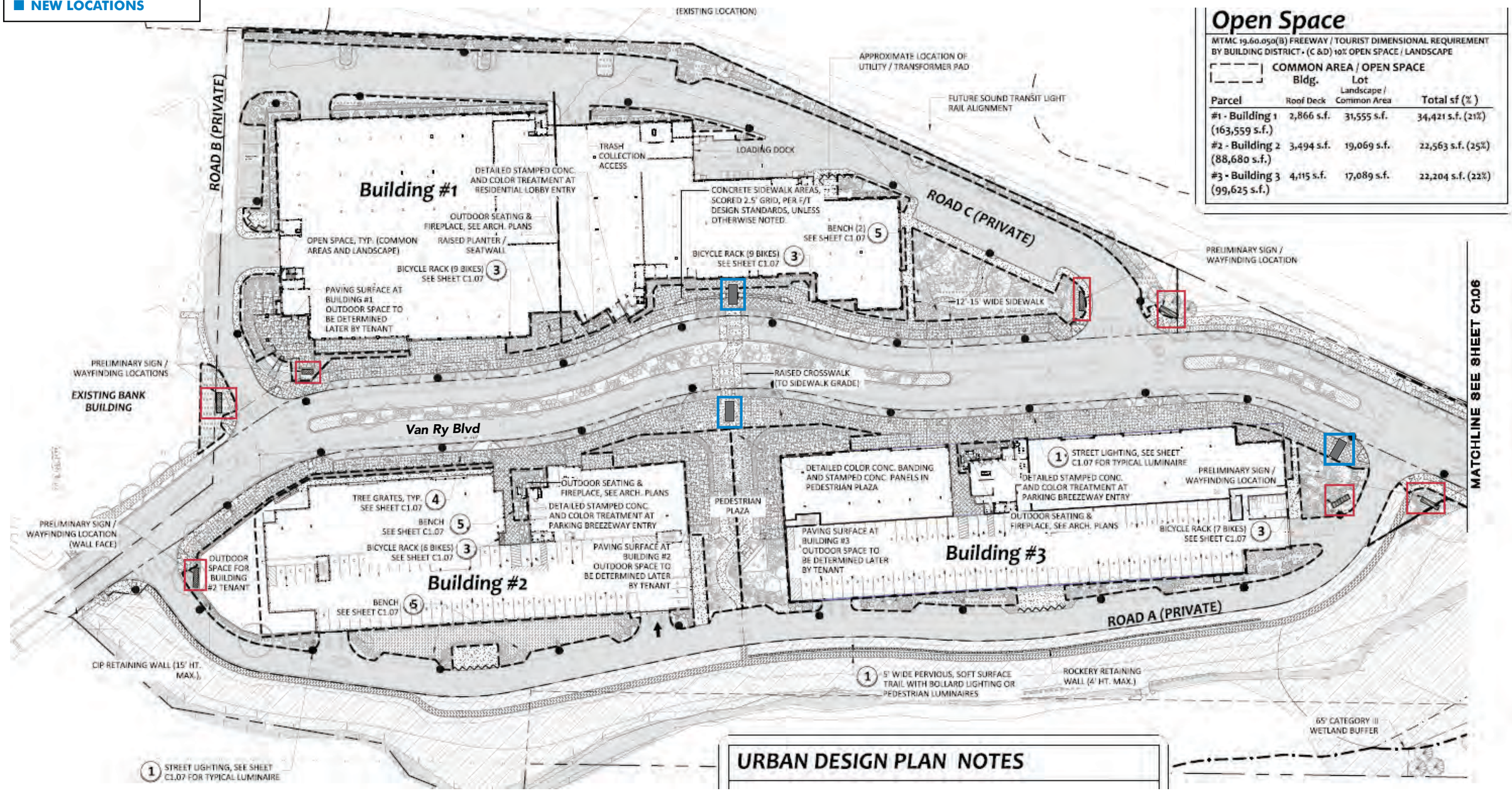

Open Space

MTMC 19.60.050(B) FREEWAY / TOURIST DIMENSIONAL REQUIREMENT BY BUILDING DISTRICT • (C &D) 10% OPEN SPACE / LANDSCAPE

COMMON AREA / OPEN SPACE

Parcel	Bldg. Roof Deck	Lot Landscape / Common Area	Total sf (%)
#1 - Building 1 (163,559 s.f.)	2,866 s.f.	31,555 s.f.	34,421 s.f. (21%)
#2 - Building 2 (88,680 s.f.)	3,494 s.f.	19,069 s.f.	22,563 s.f. (25%)
#3 - Building 3 (99,625 s.f.)	4,115 s.f.	17,089 s.f.	22,204 s.f. (22%)

URBAN DESIGN PLAN NOTES

COA #21

Prior to installation of any exterior signage – including freestanding signs, wayfinding signs, and building signs – a master sign plan shall be submitted to Planning Staff for review and approval, and then recorded with or subsequent to the Final Binding Site Plan. The master sign plan shall specifically define sign types, allowed locations, methods of attachment, and allocation of allowable signage among tenant spaces, in conformance with Standards 1 – 5 on page 20 of the Freeway/Tourist District Design Standards, as adopted March 2014. The plan shall include the following provisions unless otherwise allowed or precluded by code 1 and approved by Planning Staff:

A. CONDITION: Wall signs shall be limited to individual letters pin mounted to the masonry fascia or mounted to a recessed raceway painted to match the masonry fascia. If a recessed raceway is used, details of the recessed raceway shall be included on the building plans submitted with the building permit application.
RESPONSE: Building Identification parapet signs will be placed on the sunshade that is an architectural element of the building. The raceway will sit on top of the sunshade and will be painted the same color as the sunshade as shown on page 29. Retail tenant signage will be approved when placed on an oversized raceway that is integrated into the architecture of the building and with the oversized raceway painted the same color as the wall façade that it is attaching to. Banner signage, as shown on pages 40-43, will be mounted with a cable tension system so that the canopy is taut and so that the banner looks as if it is a rigid fabricated sign.

B. CONDITION: Building signage shall be limited to ground floor fascia's, ground floor canopies and windows, and upper floor walls having large areas void of regularly spaced windows.
RESPONSE: All building signage is either at the ground floors and attached to entry canopies or attached at the top portion of the west façade on the sunshade. Banner signage which encourages the building leasing operation are mounted where there are large voids of space.

C. CONDITION: Monument signs shall incorporate materials matching the masonry siding materials of the building(s).
RESPONSE: Monument signs were designed to incorporate both the branding of Terrace Station as well as blending with the surroundings. As painted aluminum free standing signage is the most durable material, we have used paint and lighting that will complement the colors and materials of the buildings. As there are 3 buildings at this site, building colors and construction will vary. However, we feel the designed 8" CMU base (which matches that used in building 2) complements each three building's overall design.

D. CONDITION: Signage shall not be mounted on roofs or extend higher than roof edge, parapet, or exterior wall, except above awnings or projecting roof features providing weather projection for the front entry and that are lower than the predominant street-facing roofline.
RESPONSE: We are not proposing any signage type that extends above the roof edge or parapet or exterior walls.

E. CONDITION: Monument signs shall be no taller than five feet in height, and shall incorporate art features or plantings around the base.
RESPONSE: The monument signs that we have proposed are 5' in height. As this site will be both a busy pedestrian and vehicle heavy site we wanted to make sure that the monument signage was placed in accordance with the binding site plan but also to make sure that it was visible and so that messaging could be read and was placed high enough on the monument signage so that it was at a readable level and so that landscaping did not obscure the messaging and directional usage of the signs. All messaging is raised high enough on the monument signs to readable in these ways. As we have trees planted in the beds in the center divider of Gateway Blvd, we wanted to make sure that signage was placed as to be visible for traffic heading both north and south and have placed directional monument signage accordingly.

F. CONDITION: All signs shall be located outside the public right-of-way unless otherwise permitted under subsequent sign code amendments and right-of-way use permits. (The wayfinding signs identified on Sheet C1.06 on each side of the Gateway Boulevard at its 236th Street intersection are not permitted in the right-of-way under current sign code provisions 2.)
RESPONSE: We have allocated a west and east facing monument at the entrance of Gateway Station at its 236th Street intersection, in the event private signage is able to be permitted off-site. We feel that due to the site being set back from 236th and to be less confusing to

visitors and tenants of Terrace Station that it is important to use these monuments as an entry to the buildings and site. We have branded these monuments per the Terrace Station brand and also allowed tenant spaces wherein they will also be able to direct patrons to their establishments and to let the public know that they are there from the entry point. These signs are key to directing all to the site and for establishing that the key anchors for the retail establishments have adequate signage directing their patrons. Additionally, we have located a sign – D-S71 further into the entry into the site which will also welcome retail patrons and which will provide additional retail tenant signage opportunities. We acknowledge that off premises signs are not permitted in the right of way. However, we would like to make a provision for future signage based on long term use.

G. CONDITION: Free-standing signs of all types shall be limited to one sign per 300 feet of street frontage on each parcel, spaced at least 100 feet apart, notwithstanding that on-premise directional signs
not exceeding 6 square feet are additionally allowed under MTMC 19.135.060(G).
RESPONSE: We have no freestanding signs other than monument signage. Monument signage is placed to direct both retail patrons and building visitors to the appropriate parking garage entries. As this is a very large site, and we have traffic heading both north and south with a center divider, signage was placed for ease of easy location of both buildings and parking. All monument signage is placed more than 100' apart.

H. CONDITION: The sign plan shall provide an allocation of allowable signage (as specified in the City's sign code) to specified tenant spaces.
RESPONSE: All signage is near code signage allowances apart from the leasing banners. Leasing banners have been proven to provide invaluable messaging in seeking building tenants. Apartment banners welcome new tenants and help to convert an interested visitor into a future renter which is a crucial part of marketing a new building. As this is a highly visible site to the I-5 corridor, signage was placed at entries and on building facades for both the building identification and retail signage. We have included additional retail signage as it is unclear at this point how many retail tenants will lease each space or if the spaces will be split between additional retail tenants. It may end up that a single retailer incorporates a buildings leasable retail space. While planning, we needed to take this into account and provide adequate retail signage locations.

DESCRIPTION OF MASTER SIGN PLAN CONSISTENCY WITH MTMC 19.135.100C, COMPREHENSIVE SIGN DESIGN PLAN

1. How do the physical components of the signs integrate into the design of the written copy?

The physical components of the signage integrate into the design of the written copy in different ways throughout the signage package. We used a variety of signage in this project adhering to the theme and branding of the project as to render the signage as a cohesive package but also to add interest to the signage so that it brought out the theme of an old world "train station" signage look and feel inspired by Union Station signage in various cities throughout the nation.

Signage copy is both open pan channel letters with skeleton neon really throwing back to the "Union Station" look and feel while directional signage copy is a more subtle push through acrylic where only the directional lighting text illuminates.

Overhead parking garage entry signage will direct both residents of Terrace Station and retail patrons of Terrace Station to the appropriate parking entries – these signs are non- illuminated and informational.

The signs are shaped as to both adhere to the branding of the project as well as nicely fit the written copy.

2. How do the signs relate to the immediate surroundings, including existing and proposed buildings, other signs, and landscaping?

The signs for Terrace Station are meant to relate to the property both as building identification signage, vehicular and parking signage and retail signage. Signs were thoughtfully placed on the buildings and the surrounding property so as to meet the needs of both pedestrian as well as vehicular traffic visiting the property. This is a unique project as the new light rail running through MLT will bring much pedestrian traffic to the retail tenants of this project.

Landscaping will surround all monument and freestanding signage so that the signs blend with the surrounding property. A muted color scheme was used so as to bring harmony to the existing buildings which also have muted color schemes and so that signage was more upscale and "classy" in nature and to set an example for MLT as to future development and signage for this growing municipality.

3. How do the signs relate to the subject property characteristics and the characteristics of the surrounding properties?

As noted earlier in the written narrative and in subject item 2, signs are designed to fit within the scale with the size and architecture of the buildings. The shape size and orientation of the signage for the building were specifically designed to blend with the architectural lines of the building and setting and to attract motorists to the site by way of the orientation of the signage. Letter and logo heights were designed to be readable for the viewing distances for vehicular traffic.

Physical components of the signage include branded but muted color schemes that blend with the color schemes of the building. The signage is meant to blend well with the surroundings and landscaping. No bright or outlandish colors are used. Soft blue/grays and golds are the primary color scheme to fit well within the northwest backgrounds. Signage will fit nicely with the characteristics of the surrounding properties which are at this point is the Umpqua Bank Home Lending building. Signage for this building is consistent with the signage for Terrace Station as it is placed at the top of the building in a linear nature. Terrace Station signage that will be visible from the I-5 corridor is placed in a similar fashion.

Terrace Station
Retail Sign Criteria

Building 1
24000 Va Ry Blvd.

Building 2
24015 Van Ry Blvd.

Building 3
23905 Van Ry Blvd.

RETAIL SIGN CRITERIA

TERRACE STATION - RETAIL SIGNAGE CRITERIA

The purpose of this document and the associated drawings are to create sign equality throughout the retail portion of the Terrace Station buildings. These criteria have been developed to ensure Retail Tenants are give equal opportunities for signage. Requirements set forth in this document are in addition to those of the city of Mountlake Terrace.

Location of Signs

A. All Signs shall be on private property unless otherwise permitted. No signage shall be placed within a required pedestrian way or where a sight obstruction may be created for pedestrian and vehicular interface areas.

Types of Signs Permitted

A. Each Retail Tenant is allowed the following sign types:

1. One canopy sign per Retail Tenant elevation. If the Retail Tenant is a corner space fronting two facades, then on sign per elevation. Canopy signs shall be single-sided and mounted to the face of the retail space canopy.

2. Alternatively, one wall sign per Retail Tenant will be allowed under the following conditions. If the Retail Tenant is fronting two facades then one sign per elevation is permitted. Each wall sign shall be single-faced and shall comply with the Retail Tenant Signage Criteria examples.

B. In addition to A, above, each Retail Tenant is allowed the following sign types:

1. One window sign per Retail Tenant elevation. If the Retail Tenant is a corner space fronting two facades, then one window sign per elevation is allowed. Window signs shall be single-sided, mounted flush to the inner surface of the windows.

2. In addition to the above, one incidental entrance sign on the glass area of the primary public entrance doors. Incidental signs shall be single-sided, mounted flush to the interior surface of the glass.

3. Grand opening or coming soon banner signage is allowed for a period up to 60 days. Banners must be kept in good condition with no fraying or apparent tears. Maximum size size shall not exceed 30 square feet. Banners must be located on the premises of the business being advertised.

Size of Signs

A. Sign are for all proposed signs will be calculated and determined as defined by the following:

The surface area of a sign shall include the entire area within a regular, geometric form or combination of regular, geometric forms comprising all the display area of the sign and including all of the elements displayed (see also Definitions, page iii). Frames and structural members not designed as part of the advertising message shall not be included in computation of sign area.

B. Canopy Signs:

In the case of an awning or canopy sign, the total area of an awning sign, with or without illumination, shall be determined as follows:

1. Where the copy area on an awning or canopy is 40 percent or less of the visible surface or sign band, draw the smallest rectangle possible around the outer edges of the written copy to determine the sign area.

2. Where the copy of the awning or canopy covers 41 percent or more of the visible surface or sign band, use the entire surface of the visible copy background as the basis for determining size.

C. Wall Signs:

1. Wall-mounted signs shall not extend above the height of the facade or wall to which attached. Wall sign area shall include each face of all signs, and area allowed within the provisions outlined below as well as in the Retail Sign Criteria document. Non-illuminated background does not count toward sign area.

2. The greater of:
   a) 50 square feet for area of structure, or 25 square feet when drawing a box around each letter, graphic, logo, symbol.
   b) 10% of surface area of wall up to 300 square feet.
   c) Tenant spaces that exceed a 1,000 square feet of wall may be allowed additional area per MSP guidelines.

D. Window Signs:

The total area of window signs shall not exceed the greater of 15 square feet per Retain Tenant elevation or 10% of the Retail Tenant window area. Illumination, if any, shall conform to the City of Mountlake Terrace Municipal Code.

E. Incidental Entrance Signs:

Incidental signs are defined as a sign of non-commercial nature containing no commercial message, intended primarily for the convenience of the public. Included are signs designating restrooms, hours of operation, entrances and exits to buildings and parking lots, help wanted, bank cards accepted, etc. Also included are signs such as “no trespassing”, and “no smoking”.

1. The maximum area for incidental entrance signs shall not exceed 2 square feet. The logo and name of the Retail Tenant may be represented by letters and logo up to a maximum height of 3 inches each.

2. The maximum message is 5 lines of text, excluding the Retail Tenant name, logo, and symbols. Said signs shall be mounted no lower than 4 feet minimum and no higher than 5’-6” maximum from the bottom of the door or finished entry floor.

F. Under Canopy Pediestrian Oriented Blade Signs

1. Under canopy pedestrian blade signs are meant to be hung over the pedestrian right-of-way. Sign illumination is encouraged. Sign will be no more than 6 square feet with minimum vertical clearance of 8’ measured from grade to the bottom of the sign.

RETAIL SIGN CRITERIA

Sign Content Permitted

Note: The city of Mountlake Terrace does not regulate sign content. Content is at the discretion of the tenant and/or building owner.

A. Sign content for canopy signs, wall signs, and window signs shall be limited to the name under which the Retail Tenant is doing business and the related business logo. Additionally, these Retail Tenant Signs may contain a short description of the business operated by the Retail Tenant provided that the size of the approved signage does not increase to over 40 square feet. Examples of said descriptions are “Italian Cuisine”, “Investment Consultants”, and similar.

B. Incidental entrance sign content is limited to the name of the business and logo, hours of business operations limited to 5 lines of text, credit cards accepted, and a no smoking symbol.

C. The Building Owner shall approved sign layouts for all signs proposed by the Retail Tenant.

Signs Not Permitted

In addition to the restrictions of signs imposed by the City of Mountlake Terrace, the following types of signs are not permitted, unless specifically provided for in this Master Sign Plan.

A. Signs painted directly on building surfaces, including windows.

B. Posters, placards, or other graphic displays within 10 feet of windows or glass doors, readily visible to the exterior.

C. Any other freestanding or building-mounted signs, including directional signs, except as permitted per Directional Sign section of this Master Sign Plan.

D. A-board, sidewalk or sandwich board signs of any size, portable (mobile) signs, searchlights, advertising vehicles, special event signs, banners or other temporary signs. Prohibited banners and temporary signs including going-out-of-business sales, auctions, garage sales, community and/or special events or other uses other than onetime grand openings.

E. “Human A-Board” signs.

F. Animated, moving, flashing, blinking, rotating, audible or odor producing signs. Variable message or public service signs, including LED, incandescent, flip matrix, electronic display signs, or other changing message center sign or display technologies are not permitted. Reader board or bulletin board signs are not permitted.

G. Vinyl or backlit awnings, “egg crate” grills.

H. Monument or freestanding signs, except per Directional and Parking Signage section.

I. Inflatable signs, figures, or objects.

RETAIL SIGN CRITERIA

J. Advertising vehicles, in which signs, banners, or billboard style graphics are attached to or placed on or in a vehicle or trailer parked adjacent to or within the building, such that the primary use or intent becomes advertising. This does not apply to company graphics applied onto a vehicle to identify it as a company vehicle.

K. Signs attached to utility poles or other unapproved structures.

L. Off-premise signs.

M. Real estate or property for sale, rental, or lease signs other than those provided by the Building Owner or Building Owner's agent.

N. No supplemental or incidental signs, other than as specifically described above, will be allowed.

Sign Guidelines as Stated in the Terrace Station Master Sign Plan (MSP)

All colors and materials are subject to the Building Owner's approval of aesthetic compliance with building design. Fabrication and materials must be of high quality and appearance. Frames, raceways, electrical components, and hardware are to be painted as to hide or integrate into the background.

A. All logos and lettering must conform to the maximum height, width, and area allowed as noted in the MSP.

B. The displayed sign outlines of heights and widths in the master sign plan are representative of the total square footage allotment. Sign shapes or logos may change based on the total allowable square footage as noted for the retail space, as well as other applicable standards set forth in the plan. Pre-set building attachments cannot be varied and must be used when mounting signage on building where waterproofing may be affected with additional mounting penetrations.

C. Lettering and logos must be individually fabricated or cut to allow the architectural skin expression to be seen behind the sign. Allowable signs on wall facades will be either fabricated channel letter type signs or push through acrylic signs on an oversized thin raceway painted to match the facade of the building. Allowable canopy signs will be face, halo, or edge-lit signage with raceways incorporated into the architecture of the sign or canopy, as to make them disappear. All ends of raceways to be closed.

D. No "cabinet" type building signs are allowed.

E. All lettering and logos may be illuminated or have a halo backlighting effect for legibility at night.

F. All raceways to support lettering and provide illumination should be concealed. Where not possible, the raceway shall be designed to minimize its appearance and painted to match adjacent surroundings to reduce its visibility.

G. Lettering and logos may vary in size, color, and expression to best suit the branding of the building tenant.

H. Each non-ground floor tenant shall be limited to one wall-mounted or canopy sign based on the MSP location. Sign per tenant visible from a right-of-way or access driveway. Note: if a tenant occupies a corner space, they may be allowed multiple signs, but only one per face of building abutting a right-of-way.

I. When two (2) Type 1 fascia signs occur near the corner of the building, only one (1) sign may occur within a 25' radius of the exterior corner of the building.

J. Sign should be securely fastened to storefront and should project no more than 8” from storefront facade. They should be located as to not obscure windows, doors, and other decorative elements and may be above canopies.

K. A minimum clearance of 8’-0” is required below signs overhanging a pedestrian only area. Additional clearance is required in vehicular use areas. Fire/emergency vehicle access routes shall have a 13’-0” clearance under signage.

L. Sign must be parallel to the canopy edge.

M. Signs that do not require a building or electrical permit are nonetheless regulated by the property owner and MSP guidelines.

General Standards of Quality

All installed signs must meet levels of the Building Owner’s standards of quality:

A. Signs shall be designed to be consistent with the building design in terms of relative scale and overall size.

B. Signs should complement and not detract from materials and colors of the building on which they will be attached.

C. Signs shall not obscure or cover architectural features of the building.

D. All signs shall be fabricated in a first-class, professional manner. Signs with a “homemade” or amateur appearance are not acceptable.

E. Lettering to be computer-cut vinyl or masking, or computer-cut dimensional material. Hand-cut or hand-painted lettering is not acceptable. Backgrounds, trim, and hardware to be spray-painted. Hand painting is not acceptable.

F. Fabrication and materials must be of high quality and appearance. Plywood, including MDO, is not acceptable. Acceptable materials include acrylic sheet (Plexiglas or Lexan), Sintra, aluminum, Alucobond, Dibond, awning canvas and similar high-quality materials common in the professional sign-making industry.

G. Signs are required to have integral sign backgrounds, unless sign consists of individual three-dimensional characters. Signs may not be painted, or vinyl applied directly on canopy or building, except window and incidental entrance signs.

H. All electrical, supports, and hardware shall be painted the same color as the canopy to which it is attached.

I. Structural hardware must be designed to be minimal in appearance and shall be painted the same color as the canopy to which it is attached. All penetrations to leased buildings must be approved by the Building Owner.

J. Illumination from or on any sign shall be shaded, shielded, directed or reduced so as to avoid undue brightness, glare or reflection of light on Retail Tenant's or adjacent tenant spaces, including residential spaces, and so as to avoid unreasonably distracting brightness to pedestrians, motorists, and residents.

K. All signs must meet the standards provided in the Uniform Building Code and/or International Building Code, as well as the National Electric Code.

L. The determination of acceptance of these minimum standards of quality will be at the sole discretion of the Building Owner.

Submittal for Building Owner Approval

Prior to installation of any sign, the Retail Tenant must obtain the Building Owner's written approval of the proposed sign design. There is no fee for submitting to the Building Owner. The process shall be as follows:

A. Retain Tenant to submit required drawings to Building Owner. The submittal includes but is not limited to:

1. Site plan. An accurate and complete site plan of the building and leasehold space in a scale that readily indicates all relevant items, including location of leased portion of building, building and/or lot lines as appropriate for type and size of Retain Tenant. Identify and indicate all signs submitted for approval.

2. Sign Elevation. Include elevations of each individual sign, including the height, width, and depth. Include material and lighting specifications. Include accurate sign face layouts and color specifications.

3. Attachment details. Include attachment details to buildings and other pertinent structural details, including identification of all penetrations to building.

4. Include calculations for sign areas and comparisons to maximum allowances.

B. Building Owner to review designs and either approve, approve with corrections, or deny application within 30 days of receipt by Building Owner. Building Owner's review and approval may include aesthetic review for colors, layout, content, materials, illumination, attachment to building, equality of and between various Retail Tenant's identification, general appearance standards, and/or other factors as solely determined at Building Owner's discretion.

C. Submittals will be noted accordingly as approved, approved with changes noted, or not approved/resubmit and returned to Retail Tenant. If resubmittal is required, it is the Retail Tenant's responsibility to revise and resubmit to Building Owner for approval.

D. After installation of signs, the Building Owner will conduct a field review to check that the signs were installed in accordance with the details noted on the drawing submittal and that they meet the Building Owner's minimum standards of quality.

Failure to Comply

Signs installed without the Building Owner's approval, and/or signs installed that do not meet the Building Owner's minimum standard of quality as determined by the sole discretion of the Building Owner, or failure to comply with any of the provisions of this document may result in the removal of signage by Building Owner at Retail Tenant's sole expense, provided the Building Owner will issue noticed to Retail Tenant of it's failure to complay at least 30 days prior to Building Owner's removal to allow Retail Tenant time to cure problem and comply.

RETAIL SIGN CRITERIA

Retail Tenant Responsibilities

A. Each Retail Tenant is solely responsible for compliance with the MSP and applicable requirements from the City of Mountlake Terrace including but not limited to, permits, submittals, and approvals, as well as any other governing jurisdictions and codes.

B. All Retail Tenant-provided signs will be in accordance with this Retail Signage Criteria. No tenant shall erect or install any sign without prior approvals from the Building Owner and the city of Mountlake Terrace.

C. Retail Tenant is responsible for all costs related to the design, permitting, construction, installation, and maintenance of Retail Tenant-provided signs.

D. It is the Retail Tenant's responsibility to provide electrical service and wiring for illuminated signs and to meet all applicable building codes for same.

E. At the termination of the lease, the removal of all signs installed by Retail Tenant is the responsibility of each Retail Tenant.

F. Retail Tenant is responsible for the repair of maintenance of Retail Tenant-provided signs, including but not limited to: maintaining all illumination and electrical in working order; keeping signs clean of accumulated dirt, bird droppings, and other accumulations; repair of signs due to natural causes, accidents, vandalism, faulty construction, faded paint or materials, material failure or other causes. Building Owner reserves the right to have signs maintained at Retail Tenant's expenses if they are not maintained to the Building Owner's satisfaction.

G. Retail Tenant is responsible for any damage caused to the building as a result of fire caused by sign wiring, illumination, or by the neon tubing.

H. Retail Tenant is fully responsible for the compliance with this Retail Signage Criteria.

Sign Maintenance

A. All Retail Tenant signs shall by constantly maintained in a state of security, safety, appearance, and repair. If any sign is found not to be so maintained or is insecurely fastened or otherwise dangerous as determined by the Building Owner, it shall be the duty of the Retail Tenant to repair or remove the sign within 10 days after receiving notice from the Building Owner or to make other arrangements for repair or removal satisfactory to the Building Owner. Failure to satisfy may cause the Building Owner to remove or repair the sign at the Retail Tenant's sole expense.

B. All Retail Tenants shall permit the periodic inspection of their signs by the Building Owner upon request. Such inspections shall be for the purpose of examining its structural and electrical connections and to ensure compliance with these criteria. Such inspections shall be carried out during business hours, unless an emergency exists.

C. Painting, repainting, or changing of a sign structure or the changing of the sign message thereon shall be considered an erection or alteration, which requires Building Owner approval.

RETAIL SIGN CRITERIA

Specific Signage Guidelines

Due to the nature of the new construction of the building and to avoid penetrating the building envelope and building waterproofing, retail tenant allowed wall signs must use provided embeds to attach signage. Only reverse pan halo illuminated, or laser cut routed and push through acrylic signs will be allowed. Signs to be placed on an oversized raceway painted the building color. The raceway will blend perfectly with the building, in size and scale of the building facade, where the sign is to be placed per the MSP.

A. All logos and lettering must conform to the maximum height, width, and area allowed.

B. Lettering and logos must be individually fabricated or cut to allow the architectural skin expression to be seen behind the sign. Allowable signs on wall facades will be either fabricated channel letter type signs or push through acrylic signs on an oversized thin raceway painted to match the facade of the building.

C. No “cabinet” type building signs are allowed.

D. All lettering and logos may be illuminated or have a halo back-lighting effect for legibility at night.

E. All raceways to support lettering and provide illumination should be concealed. Where not possible, the raceway shall be designed to minimize its appearance and painted to match adjacent surroundings to reduce its visibility. All raceway ends to be closed.

F. Lettering and logos may vary in size, color, and expression to best suit the branding of the building tenant.

G. Each non-ground floor tenant shall be limited to one wall-mounted or canopy sign based on the MSP location. One sign per tenant visible from a right-of-way or access driveway. Note: if a tenant occupies a corner space, they may be allowed multiple signs, but only on per face of the building abutting a right-of-way. Additionally, in Building 1 - if the Retail Tenant has frontage facing I-5, an additional Retail Tenant sign will be allowed. In this case, if the Retail Tenant has frontages on two or more elevations and if the Retail Tenant occupies over 15,000 SF of tenant space, a third I-5 facing retail sign shall be allowed.

H. When two (2) Type 1 fascia signs occur near the corner of the building, only one (1) sign may occur within a 25’ radius of the existing corner of the building.

I. Signs shall be securely fastened to storefront and should project no more than 8” from storefront facade. They should be located as to not obscure windows, doors, and other decorative elements and may be above canopies.

J. A minimum clearance of 8’-0” is required below sign.

K. Sign must be parallel to the canopy edge.

WALL SIGN EXAMPLES

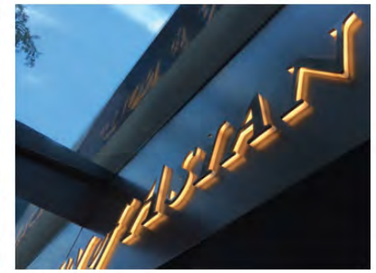

CANOPY SIGN EXAMPLES

BLADE SIGN EXAMPLES

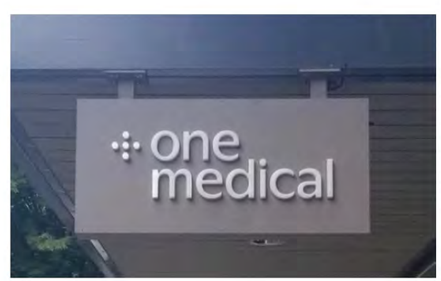

VISIBILITY CHART

READABLE DISTANCE	MAX IMPACT DISTANCE	LETTER HEIGHT
100 ft	30 ft	3 in
150 ft	40 ft	4 in
200 ft	60 ft	6 in
350 ft	80 ft	8 in
400 ft	90 ft	9 in
450 ft	100 ft	10 in
525 ft	120 ft	12 in
630 ft	150 ft	15 in
750 ft	180 ft	18 in
1,000 ft	240 ft	24 in
1,250 ft	300 ft	30 in
1,500 ft	360 ft	36 in
1,750 ft	420 ft	42 in
2,000 ft	480 ft	48 in
2,250 ft	540 ft	54 in
2,500 ft	600 ft	60 in

BRAND GUIDELINES

TERRACE STATION
APARTMENTS

TERRACE STATION
APARTMENTS

TERRACE STATION
APARTMENTS

TERRACE STATION
APARTMENTS

TERRACE STATION
APARTMENTS

TERRACE STATION

PANTONE 546 C	PANTONE 731 C	PANTONE 7562 C		
RGB 7 | 43 | 49	RGB 119 | 66 | 18	RGB 189 | 155 | 96		
HEX/HTML 072B31	HEX/HTML 774212	HEX/HTML BD9B60		
CMYK 97 | 32 | 34 | 86	CMYK 0 | 63 | 100 | 57	CMYK 14 | 29 | 62 | 12		

LOGO COLORS

PANTONE 7485 C	PANTONE 5625 C	PANTONE 5527 C	PANTONE WARM GRAY 1 C	PANTONE 7506 30% TINT
RGB 208 | 222 | 187	RGB 112 | 133 | 115	RGB 188 | 201 | 197	RGB 215 | 210 | 203	RGB 239 | 219 | 178
HEX/HTML D0DEBB	HEX/HTML 708573	HEX/HTML BCC9C5	HEX/HTML D7D2CB	HEX/HTML EFDBB2
CMYK 16 | 0 | 25 | 0	CMYK 52 | 27 | 45 | 17	CMYK 24 | 10 | 13 | 0	CMYK 10 | 10 | 11 | 0	CMYK 0 | 7 | 26 | 0

SECONDARY COLOR PALETTE

BOURTON BASE PRIMARY COPY

Scotch Deck - Secondary Copy

A DESIGN STUDIO

MAIN CONTACT
Gracia Mueller
360.929.3077

CREATIVE
Brody Lund
425.359.7380

Additional information:
adesignstudioseattle.com

Follow us on social:
@adesignstudioseattle

COPYRIGHT
All artwork contained herein is the copyrighted property of A Design Studio Seattle. This includes, but is not limited to, logos, specifications, artwork and engineering. Any usage beyond internal reviews shall require our appoval and a separate design fee paid to A Design Studio Seattle. Usage rights can also be purchased (limited or complete) for an additional fee. Any unlawful distribution of said artwork is a violation of federal copyright laws.

PROJECT NAME
Terrace Station

PROJECT #
20-004

ADDRESS
Address Varies
Mountlake Terrace, WA 98043

DATE
08/05/20

VERSION NOTES

V1	07/14 Concept design
V2	07/31 Revise signs
V3	08/06 Revise signs
V4	08/22 Revise signs
V5	10/02 Revise signs
V6	11/19 Revise signs
V7	01/02 Revise signs
V8	02/20 Revise all concepts & signs
V9	02/24 Revise signs
V10	03/19 Add signs, revise narrative
V11	05/19 Add/revise signs, revise all B3
V12	05/22 Revise B3 & directional signs
V13	06/02 Revise B1 canopy details
V14	08/05 Revise per city comments
V15	

PAGE SCALE
As Noted

PAGE #
01

SIGN STANDARDS

CANOPY SIGN

PARAPET SIGN

PARKING BLADE SIGN

PARKING WALL SIGN

DIRECTIONAL FREESTANDING SIGN

DIRECTIONAL FREESTANDING SIGN

BANNER SIGN

A DESIGN STUDIO

MAIN CONTACT
Gracia Mueller
360.929.3077

CREATIVE
Brody Lund
425.359.7380

Additional information:
adesignstudioseattle.com

Follow us on social:
@adesignstudioseattle

COPYRIGHT
All artwork contained herein is the copyrighted property of A Design Studio Seattle. This includes, but is not limited to, logos, specifications, artwork and engineering. Any usage beyond internal reviews shall require our appoval and a separate design fee paid to A Design Studio Seattle. Usage rights can also be purchased (limited or complete) for an additional fee. Any unlawful distribution of said artwork is a violation of federal copyright laws.

PROJECT NAME
Terrace Station

PROJECT #
20-004

ADDRESS
Address Varies
Mountlake Terrace, WA 98043

DATE
08/05/20

VERSION NOTES

V1	07/14 Concept design
V2	07/31 Revise signs
V3	08/06 Revise signs
V4	08/22 Revise signs
V5	10/02 Revise signs
V6	11/19 Revise signs
V7	01/02 Revise signs
V8	02/20 Revise all concepts & signs
V9	02/24 Revise signs
V10	03/19 Add signs, revise narrative
V11	05/19 Add/revise signs, revise all B3
V12	05/22 Revise B3 & directional signs
V13	06/02 Revise B1 canopy details
V14	08/05 Revise per city comments
V15	

PAGE SCALE
As Noted

PAGE #
02

SIGN SCHEDULE

SIGN #	DESCRIPTION – BUILDING 1	
B1-S01	S/F ILLUMINATED CANOPY SIGN ▪ QTY (1) 12'-0"W x 3'-0"H ▪ SIGN AREA: 36.0 SQ FT	PAGE 29-33
B1-S02	S/F ILLUMINATED PARAPET SIGN ▪ QTY (1) 25'-0"W x 2'-3 1/4"H ▪ SIGN AREA: 41.9 SQ FT	PAGE 34-36
~~B1-S02.1~~	~~S/F ILLUMINATED PARAPET SIGN ▪ QTY (1) 25'-0"W x 2'-3 1/4"H ▪ SIGN AREA: 41.9 SQ FT~~	
B1-S03	S/F ILLUMINATED PARAPET SIGN ▪ QTY (1) 25'-0"W x 2'-3 1/4"H ▪ SIGN AREA: 41.9 SQ FT	PAGE 37-39
~~B1-S04~~	~~S/F NON-ILLUM. TEMP. BANNER SIGN ▪ QTY (1) 4'-4"W x 26'-7"H ▪ SIGN AREA: 115.2 SQ FT~~	
B1-S05	S/F NON-ILLUM. TEMP. BANNER SIGN ▪ QTY (1) 4'-4"W x 26'-7"H ▪ SIGN AREA: 115.2 SQ FT	PAGE 40, 42-43
B1-S06	S/F NON-ILLUM. TEMP. BANNER SIGN ▪ QTY (1) 4'-4"W x 26'-7"H ▪ SIGN AREA: 115.2 SQ FT	PAGE 41-43
B1-S07	D/F ILLUMINATED BLADE SIGN ▪ QTY (1) 2'-0"W x 2'-2 1/8"H ▪ SIGN AREA: 5.3 SQ FT	PAGE 44, 47-48
B1-S08	D/F ILLUMINATED BLADE SIGN ▪ QTY (1) 2'-0"W x 2'-2 1/8"H ▪ SIGN AREA: 5.3 SQ FT	PAGE 45, 47, 49
B1-S09	D/F ILLUMINATED BLADE SIGN ▪ QTY (1) 2'-0"W x 2'-2 1/8"H ▪ SIGN AREA: 5.3 SQ FT	PAGE 46-47, 50
B1-S09.1	S/F NON-ILLUMINATED WALL SIGN ▪ QTY (1) 22'-0"W x 1'-6"H ▪ SIGN AREA: 33.0 SQ FT	PAGE 51-52
B1-S10	S/F NON-ILLUMINATED WALL SIGN ▪ QTY (1) 22'-0"W x 2'-0"H ▪ SIGN AREA: 44.0 SQ FT	PAGE 54-56
B1-S11	S/F NON-ILLUMINATED WALL SIGN ▪ QTY (1) 22'-0"W x 2'-0"H ▪ SIGN AREA: 44.0 SQ FT	PAGE 57-59
B1-S12	S/F ILLUMINATED CANOPY SIGN ▪ QTY (1) 20'-0"W x 2'-0"H ▪ SIGN AREA: 40.0 SQ FT	PAGE 60-63
B1-S13	S/F ILLUMINATED CANOPY SIGN ▪ QTY (1) 10'-10"W x 3'-4"H ▪ SIGN AREA: 36.1 SQ FT	PAGE 64-67
B1-S14	S/F ILLUMINATED WALL SIGN ▪ QTY (1) 16'-0"W x 2'-6"H ▪ SIGN AREA: 40.0 SQ FT	PAGE 68-69
B1-S15	S/F ILLUMINATED WALL SIGN ▪ QTY (1) 16'-0"W x 2'-6"H ▪ SIGN AREA: 40.0 SQ FT	PAGE 70-71
B1-S16	S/F ILLUMINATED WALL SIGN ▪ QTY (1) 16'-0"W x 2'-6"H ▪ SIGN AREA: 40.0 SQ FT	PAGE 72-73
B1-S17	S/F ILLUMINATED WALL SIGN ▪ QTY (1) 16'-0"W x 2'-6"H ▪ SIGN AREA: 40.0 SQ FT	PAGE 74-75
B1-S18	S/F ILLUMINATED WALL SIGN ▪ QTY (1) 16'-0"W x 2'-6"H ▪ SIGN AREA: 40.0 SQ FT	PAGE 76-77
B1-S19	S/F ILLUMINATED WALL SIGN ▪ QTY (1) 12'-0"W x 3'-4"H ▪ SIGN AREA: 40.0 SQ FT	PAGE 78-79
B1-S20	S/F ILLUMINATED WALL SIGN ▪ QTY (1) 20'-6"W x 1'-8"H ▪ SIGN AREA: 34.2 SQ FT	PAGE 80-81
B1-S21	S/F ILLUMINATED WALL SIGN ▪ QTY (1) 16'-0"W x 2'-6"H ▪ SIGN AREA: 40.0 SQ FT	PAGE 82-83
B1-S22	S/F ILLUMINATED WALL SIGN ▪ QTY (1) 16'-0"W x 2'-6"H ▪ SIGN AREA: 40.0 SQ FT	PAGE 84-85
B1-S23	S/F ILLUMINATED WALL SIGN ▪ QTY (1) 16'-0"W x 2'-6"H ▪ SIGN AREA: 40.0 SQ FT	PAGE 86-87
BUILDING 2		PAGE 88
B2-S24	S/F ILLUMINATED CANOPY SIGN ▪ QTY (1) 20'-0" W x 4'-11 7/8" H ▪ SIGN AREA: 99.8 SQ FT	PAGE 94-97
B2-S25	S/F NON-ILLUM. TEMP. BANNER SIGN ▪ QTY (1) 4'-4"W x 26'-7"H ▪ SIGN AREA: 115.2 SQ FT	PAGE 98, 101-102
B2-S26	S/F NON-ILLUM. TEMP. BANNER SIGN ▪ QTY (1) 4'-4"W x 26'-7"H ▪ SIGN AREA: 115.2 SQ FT	PAGE 99-102
B2-S27	D/F ILLUMINATED BLADE SIGN ▪ QTY (1) 2'-0"W x 2'-8"H ▪ SIGN AREA: 5.3 SQ FT	PAGE 103, 105-106
B2-S28	D/F ILLUMINATED BLADE SIGN ▪ QTY (1) 2'-0"W x 2'-8"H ▪ SIGN AREA: 5.3 SQ FT	PAGE 104-105, 107

SIGN LEGEND

- BUILDING ID SIGNAGE
- PARKING SIGNAGE
- RETAIL SIGNAGE
- DIRECTIONAL SIGNAGE

A DESIGN STUDIO

MAIN CONTACT
Gracia Mueller
360.929.3077

CREATIVE
Brody Lund
425.359.7380

Additional information:
adesignstudioseattle.com

Follow us on social:
@adesignstudioseattle

COPYRIGHT
All artwork contained herein is the copyrighted property of A Design Studio Seattle. This includes, but is not limited to, logos, specifications, artwork and engineering. Any usage beyond internal reviews shall require our appoval and a separate design fee paid to A Design Studio Seattle. Usage rights can also be purchased (limited or complete) for an additional fee. Any unlawful distribution of said artwork is a violation of federal copyright laws.

PROJECT NAME
Terrace Station

PROJECT #
20-004

ADDRESS
Address Varies
Mountlake Terrace, WA 98043

DATE
08/05/20

VERSION NOTES

V1	07/14 Concept design
V2	07/31 Revise signs
V3	08/06 Revise signs
V4	08/22 Revise signs
V5	10/02 Revise signs
V6	11/19 Revise signs
V7	01/02 Revise signs
V8	02/20 Revise all concepts & signs
V9	02/24 Revise signs
V10	03/19 Add signs, revise narrative
V11	05/19 Add/revise signs, revise all B3
V12	05/22 Revise B3 & directional signs
V13	06/02 Revise B1 canopy details
V14	08/05 Revise per city comments
V15	

PAGE SCALE
As Noted

PAGE #
03

SIGN SCHEDULE

SIGN #	DESCRIPTION	
B2-S29	S/F NON-ILLUMINATED WALL SIGN ▪ QTY (1) 21'-4"W x 1'-6"H ▪ SIGN AREA: 32.0 SQ FT	PAGE 108-109
B2-S30	S/F NON-ILLUMINATED WALL SIGN ▪ QTY (1) 21'-4"W x 1'-6"H ▪ SIGN AREA: 32.0 SQ FT	PAGE 110-111
B2-S31	S/F ILLUMINATED WALL SIGN ▪ QTY (1) 15'-0"W x 2'-4 1/2"H ▪ SIGN AREA: 40.0 SQ FT	PAGE 112-114
B2-S32	S/F ILLUMINATED WALL SIGN ▪ QTY (1) 16'-0"W x 2'-6"H ▪ SIGN AREA: 40 SQ FT	PAGE 115-116
B2-S32.1	D/F NON-ILLUMINATED BLADE SIGN ▪ QTY (1) 4'-0" W x 1'-6" H ▪ SIGN AREA: 6.0 SQ FT	PAGE 116.1
B2-S33	S/F ILLUMINATED WALL SIGN ▪ QTY (1) 16'-0"W x 2'-6"H ▪ SIGN AREA: 40.0 SQ FT	PAGE 117-118
B2-S33.1	D/F NON-ILLUMINATED BLADE SIGN ▪ QTY (1) 4'-0" W x 1'-6" H ▪ SIGN AREA: 6.0 SQ FT	PAGE 118.1
B2-S34	S/F ILLUMINATED WALL SIGN ▪ QTY (1) 16'-0"W x 2'-6"H ▪ SIGN AREA: 40.0 SQ FT	PAGE 119-120
B2-S34.1	D/F NON-ILLUMINATED BLADE SIGN ▪ QTY (1) 4'-0" W x 1'-6" H ▪ SIGN AREA: 6.0 SQ FT	PAGE 120.1
B2-S35	S/F ILLUMINATED WALL SIGN ▪ QTY (1) 16'-0"W x 2'-6"H ▪ SIGN AREA: 40.0 SQ FT	PAGE 121-122
B2-S35.1	D/F NON-ILLUMINATED BLADE SIGN ▪ QTY (1) 4'-0" W x 1'-6" H ▪ SIGN AREA: 6.0 SQ FT	PAGE 122.1
B2-S36	S/F ILLUMINATED WALL SIGN ▪ QTY (1) 22'-0"W x 1'-6"H ▪ SIGN AREA: 33.0 SQ FT	PAGE 123-124
B2-S36.1	D/F NON-ILLUMINATED BLADE SIGN ▪ QTY (1) 4'-0" W x 1'-6" H ▪ SIGN AREA: 6.0 SQ FT	PAGE 124.1
B2-S37	S/F ILLUMINATED WALL SIGN ▪ QTY (1) 16'-0"W x 2'-6"H ▪ SIGN AREA: 40.0 SQ FT	PAGE 125-126
B2-S37.1	D/F NON-ILLUMINATED BLADE SIGN ▪ QTY (1) 4'-0" W x 1'-6" H ▪ SIGN AREA: 6.0 SQ FT	PAGE 126.1
B2-S38	S/F ILLUMINATED WALL SIGN ▪ QTY (1) 16'-0"W x 2'-6"H ▪ SIGN AREA: 40.0 SQ FT	PAGE 127-128
B2-S38.1	D/F NON-ILLUMINATED BLADE SIGN ▪ QTY (1) 4'-0" W x 1'-6" H ▪ SIGN AREA: 6.0 SQ FT	PAGE 128.1
B2-S39	S/F ILLUMINATED WALL SIGN ▪ QTY (1) 20'-0"W x 2'-0"H ▪ SIGN AREA: 40.0 SQ FT	PAGE 129-130
B2-S39.1	D/F NON-ILLUMINATED BLADE SIGN ▪ QTY (1) 4'-0" W x 1'-6" H ▪ SIGN AREA: 6.0 SQ FT	PAGE 130.1
B2-S40	S/F ILLUMINATED WALL SIGN ▪ QTY (1) 20'-0"W x 2'-0"H ▪ SIGN AREA: 40.0 SQ FT	PAGE 131-132
B2-S40.1	D/F NON-ILLUMINATED BLADE SIGN ▪ QTY (1) 4'-0" W x 1'-6" H ▪ SIGN AREA: 6.0 SQ FT	PAGE 132.1
B2-S41	S/F ILLUMINATED WALL SIGN ▪ QTY (1) 20'-0"W x 2'-0"H ▪ SIGN AREA: 40.0 SQ FT	PAGE 133-134
B2-S41.1	D/F NON-ILLUMINATED BLADE SIGN ▪ QTY (1) 4'-0" W x 1'-6" H ▪ SIGN AREA: 6 SQ FT	PAGE 134.1-134.2
B2-S41.2	D/F NON-ILLUMINATED BLADE SIGN ▪ QTY (1) 4'-0" W x 1'-6" H ▪ SIGN AREA: 6 SQ FT	PAGE 134.3
BUILDING 3		
B3-S42	S/F ILLUMINATED CANOPY SIGN ▪ QTY (1) 20'-6" W x 2'-0" H ▪ SIGN AREA: 26.3 SQ FT	PAGE 141-143
B3-S43	D/F ILLUMINATED BLADE SIGN ▪ QTY (1) 3'-7" W x 1'-4" H ▪ SIGN AREA: 4.8 SQ FT	PAGE 144-146
B3-S44	S/F ILLUMINATED PARAPET SIGN ▪ QTY (1) 20'-6" W x 2'-0" H ▪ SIGN AREA: 26.3 SQ FT	PAGE 147, 150-151
B3-S45	S/F ILLUMINATED PARAPET SIGN ▪ QTY (1) 20'-6" W x 2'-0" H ▪ SIGN AREA: 26.3 SQ FT	PAGE 148, 150-151
B3-S46	S/F ILLUMINATED PARAPET SIGN ▪ QTY (1) 20'-6" W x 2'-0" H ▪ SIGN AREA: 26.3 SQ FT	PAGE 149-151
B3-S47	D/F ILLUMINATED BLADE SIGN ▪ QTY (1) 2'-8" W x 2'-0" H ▪ SIGN AREA: 5.3 SQ FT	PAGE 152-154

SIGN LEGEND

- BUILDING ID SIGNAGE
- PARKING SIGNAGE
- RETAIL SIGNAGE
- DIRECTIONAL SIGNAGE

A DESIGN STUDIO

MAIN CONTACT
Gracia Mueller
360.929.3077

CREATIVE
Brody Lund
425.359.7380

Additional information:
adesignstudioseattle.com

Follow us on social:
@adesignstudioseattle

COPYRIGHT
All artwork contained herein is the copyrighted property of A Design Studio Seattle. This includes, but is not limited to, logos, specifications, artwork and engineering. Any usage beyond internal reviews shall require our appoval and a separate design fee paid to A Design Studio Seattle. Usage rights can also be purchased (limited or complete) for an additional fee. Any unlawful distribution of said artwork is a violation of federal copyright laws.

PROJECT NAME
Terrace Station

PROJECT #
20-004

ADDRESS
Address Varies
Mountlake Terrace, WA 98043

DATE
08/05/20

VERSION NOTES

V1	07/14 Concept design
V2	07/31 Revise signs
V3	08/06 Revise signs
V4	08/22 Revise signs
V5	10/02 Revise signs
V6	11/19 Revise signs
V7	01/02 Revise signs
V8	02/20 Revise all concepts & signs
V9	02/24 Revise signs
V10	03/19 Add signs, revise narrative
V11	05/19 Add/revise signs, revise all B3
V12	05/22 Revise B3 & directional signs
V13	06/02 Revise B1 canopy details
V14	08/05 Revise per city comments
V15	

PAGE SCALE
As Noted

PAGE #
04

SIGN SCHEDULE

SIGN #	DESCRIPTION	
B3-S48	S/F ILLUMINATED WALL SIGN ▪ QTY (1) 24'-0" W x 1'-0" H ▪ SIGN AREA: 24 SQ FT	PAGE 155-156
B3-S49	S/F ILLUMINATED WALL SIGN ▪ QTY (1) 17'-0" W x 3'-0" H ▪ SIGN AREA: 26 SQ FT	PAGE 157-158
B3-S50	S/F ILLUMINATED CANOPY SIGN ▪ QTY (1) 16'-0 W x 2'-6" H ▪ SIGN AREA: 40 SQ FT	PAGE 159-160
B3-S51	S/F ILLUMINATED WALL SIGN ▪ QTY (1) 16'-0 W x 2'-6" H ▪ SIGN AREA: 40 SQ FT	PAGE 161-162
B3-S52	D/F ILLUMINATED BLADE SIGN ▪ QTY (1) 4'-0" W x 1'-6" H ▪ SIGN AREA: 6 SQ FT	PAGE 163-164
B3-S53	S/F ILLUMINATED WALL SIGN ▪ QTY (1) 16'-0 W x 2'-6" H ▪ SIGN AREA: 40 SQ FT	PAGE 165-166
B3-S54	D/F ILLUMINATED BLADE SIGN ▪ QTY (1) 4'-0" W x 1'-6" H ▪ SIGN AREA: 6 SQ FT	PAGE 167-168
B3-S55	S/F ILLUMINATED WALL SIGN ▪ QTY (1) 16'-0 W x 2'-6" H ▪ SIGN AREA: 40 SQ FT	PAGE 169-170
B3-S56	D/F ILLUMINATED BLADE SIGN ▪ QTY (1) 4'-0" W x 1'-6" H ▪ SIGN AREA: 6 SQ FT	PAGE 171-172
B3-S57	S/F ILLUMINATED WALL SIGN ▪ QTY (1) 16'-0 W x 2'-6" H ▪ SIGN AREA: 40 SQ FT	PAGE 173-174
B3-S58	D/F ILLUMINATED BLADE SIGN ▪ QTY (1) 4'-0" W x 1'-6" H ▪ SIGN AREA: 6 SQ FT	PAGE 175-176
B3-S59	S/F ILLUMINATED WALL SIGN ▪ QTY (1) 16'-0 W x 2'-6" H ▪ SIGN AREA: 40 SQ FT	PAGE 177-178
B3-S60	D/F ILLUMINATED BLADE SIGN ▪ QTY (1) 4'-0" W x 1'-6" H ▪ SIGN AREA: 6 SQ FT	PAGE 179-180
B3-S61	S/F ILLUMINATED WALL SIGN ▪ QTY (1) 16'-0 W x 2'-6" H ▪ SIGN AREA: 40 SQ FT	PAGE 181-182
B3-S62	D/F ILLUMINATED BLADE SIGN ▪ QTY (1) 4'-0" W x 1'-6" H ▪ SIGN AREA: 6 SQ FT	PAGE 183-184
B3-S63	S/F ILLUMINATED WALL SIGN ▪ QTY (1) 16'-0 W x 2'-6" H ▪ SIGN AREA: 40 SQ FT	PAGE 185-186
B3-S64	D/F ILLUMINATED BLADE SIGN ▪ QTY (1) 4'-0" W x 1'-6" H ▪ SIGN AREA: 6 SQ FT	PAGE 187-188
B3-S65	S/F ILLUMINATED CANOPY SIGN ▪ QTY (1) 16'-0 W x 2'-6" H ▪ SIGN AREA: 40 SQ FT	PAGE 189-190
B3-S66	S/F NON-ILLUMINATED BANNER ▪ QTY (1) 4'-4" W x 26'-7" H ▪ SIGN AREA: 115.2 SQ FT	PAGE 191, 193
B3-S67	S/F NON-ILLUMINATED BANNER ▪ QTY (1) 4'-4" W x 26'-7" H ▪ SIGN AREA: 115.2 SQ FT	PAGE 192-193
MONUMENT / DIRECTIONAL SIGNAGE		
D-S68	S/F ILLUMINATED MONUMENT SIGN ▪ QTY (1) 2'-2" W x 5'-0" H ▪ SIGN AREA: 9.4 SQ FT	PAGE 199-200
D-S69	S/F ILLUMINATED MONUMENT SIGN ▪ QTY (1) 2'-2" W x 5'-0" H ▪ SIGN AREA: 9.4 SQ FT	PAGE 201-202
D-S70	S/F ILLUMINATED MONUMENT SIGN ▪ QTY (1) 2'-2" W x 5'-0" H ▪ SIGN AREA: 9.4 SQ FT	PAGE 203-204
D-S71	S/F ILLUMINATED MONUMENT SIGN ▪ QTY (1) 2'-2" W x 5'-0" H ▪ SIGN AREA: 9.4 SQ FT	PAGE 205-206
D-S72	D/F ILLUMINATED MONUMENT SIGN ▪ QTY (1) 2'-2" W x 5'-0" H ▪ SIGN AREA: 9.4 SQ FT	PAGE 207-208
D-S73	D/F ILLUMINATED MONUMENT SIGN ▪ QTY (1) 2'-2" W x 5'-0" H ▪ SIGN AREA: 9.4 SQ FT	PAGE 207, 209
D-S74	S/F ILLUMINATED MONUMENT SIGN ▪ QTY (1) 6'-11 1/2" W x 5'-0" H ▪ SIGN AREA: 29.4 FT	PAGE 210-211
D-S75	S/F ILLUMINATED MONUMENT SIGN ▪ QTY (1) 6'-11 1/2" W x 5'-0" H ▪ SIGN AREA: 29.4 FT	PAGE 210, 212
D-S76	S/F ILLUMINATED MONUMENT SIGN ▪ QTY (1) 6'-11 1/2" W x 5'-0" H ▪ SIGN AREA: 29.4 FT	PAGE 210, 213
D-S77	S/F ILLUMINATED MONUMENT SIGN ▪ QTY (1) 6'-11 1/2" W x 5'-0" H ▪ SIGN AREA: 29.4 FT	PAGE 210, 214

SIGN LEGEND

- BUILDING ID SIGNAGE
- PARKING SIGNAGE
- RETAIL SIGNAGE
- DIRECTIONAL SIGNAGE

A DESIGN STUDIO

MAIN CONTACT
Gracia Mueller
360.929.3077

CREATIVE
Brody Lund
425.359.7380

Additional information:
adesignstudioseattle.com

Follow us on social:
@adesignstudioseattle

COPYRIGHT
All artwork contained herein is the copyrighted property of A Design Studio Seattle. This includes, but is not limited to, logos, specifications, artwork and engineering. Any usage beyond internal reviews shall require our appoval and a separate design fee paid to A Design Studio Seattle. Usage rights can also be purchased (limited or complete) for an additional fee. Any unlawful distribution of said artwork is a violation of federal copyright laws.

PROJECT NAME
Terrace Station

PROJECT #
20-004

ADDRESS
Address Varies
Mountlake Terrace, WA 98043

DATE
08/05/20

VERSION NOTES

V1	07/14 Concept design
V2	07/31 Revise signs
V3	08/06 Revise signs
V4	08/22 Revise signs
V5	10/02 Revise signs
V6	11/19 Revise signs
V7	01/02 Revise signs
V8	02/20 Revise all concepts & signs
V9	02/24 Revise signs
V10	03/19 Add signs, revise narrative
V11	05/19 Add/revise signs, revise all B3
V12	05/22 Revise B3 & directional signs
V13	06/02 Revise B1 canopy details
V14	08/05 Revise per city comments
V15	

PAGE SCALE
As Noted

PAGE #
05

SITE PLANS - OVERALL VICINITY MAP

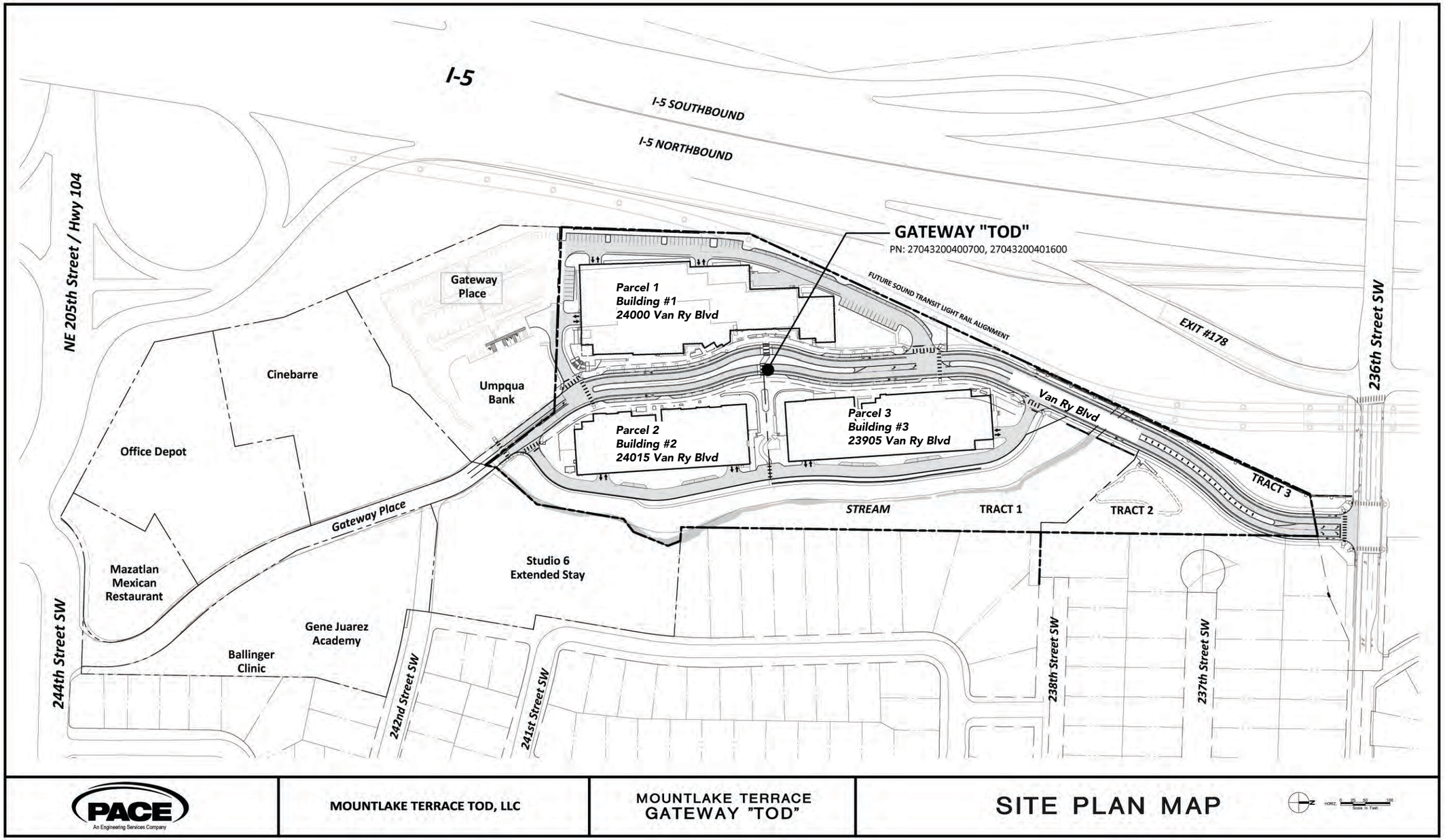

N

A DESIGN STUDIO

MAIN CONTACT
Gracia Mueller
360.929.3077

CREATIVE
Brody Lund
425.359.7380

Additional information:
adesignstudioseattle.com

Follow us on social:
@adesignstudioseattle

COPYRIGHT
All artwork contained herein is the copyrighted property of A Design Studio Seattle. This includes, but is not limited to, logos, specifications, artwork and engineering. Any usage beyond internal reviews shall require our appoval and a separate design fee paid to A Design Studio Seattle. Usage rights can also be purchased (limited or complete) for an additional fee. Any unlawful distribution of said artwork is a violation of federal copyright laws.

PROJECT NAME
Terrace Station

PROJECT #
20-004

ADDRESS
Address Varies
Mountlake Terrace, WA 98043

DATE
08/05/20

VERSION NOTES

V1	07/14 Concept design
V2	07/31 Revise signs
V3	08/06 Revise signs
V4	08/22 Revise signs
V5	10/02 Revise signs
V6	11/19 Revise signs
V7	01/02 Revise signs
V8	02/20 Revise all concepts & signs
V9	02/24 Revise signs
V10	03/19 Add signs, revise narrative
V11	05/19 Add/revise signs, revise all B3
V12	05/22 Revise B3 & directional signs
V13	06/02 Revise B1 canopy details
V14	08/05 Revise per city comments
V15	

PAGE SCALE
As Noted

PAGE #
06

SITE PLANS - NORTH SECTION

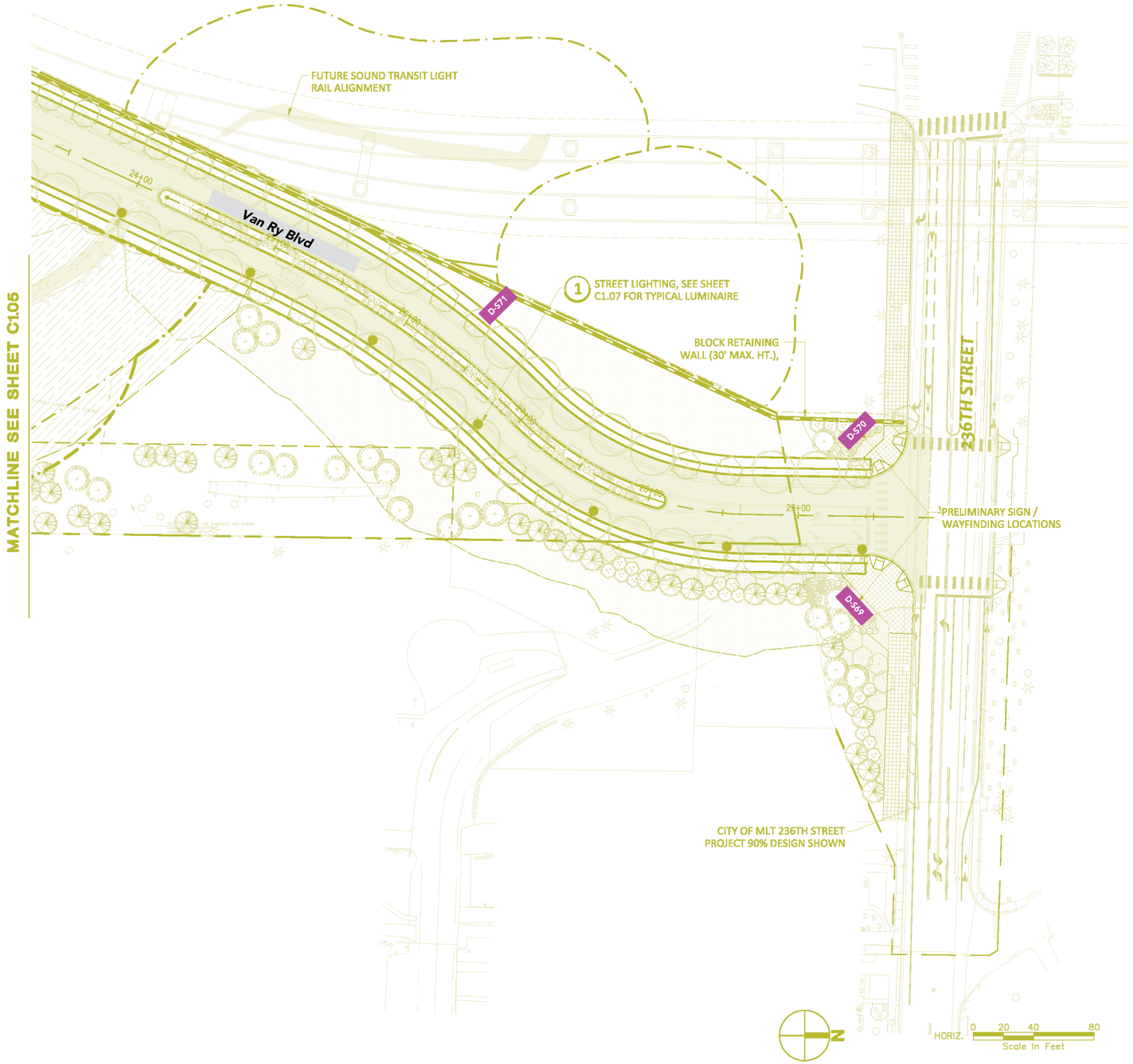

SIGN LEGEND
BUILDING ID SIGNAGE
PARKING SIGNAGE
RETAIL SIGNAGE
DIRECTIONAL SIGNAGE

A DESIGN STUDIO

MAIN CONTACT
Gracia Mueller
360.929.3077

CREATIVE
Brody Lund
425.359.7380

Additional information:
adesignstudioseattle.com

Follow us on social:
@adesignstudioseattle

COPYRIGHT
All artwork contained herein is the copyrighted property of A Design Studio Seattle. This includes, but is not limited to, logos, specifications, artwork and engineering. Any usage beyond internal reviews shall require our appoval and a separate design fee paid to A Design Studio Seattle. Usage rights can also be purchased (limited or complete) for an additional fee. Any unlawful distribution of said artwork is a violation of federal copyright laws.

PROJECT NAME
Terrace Station

PROJECT #
20-004

ADDRESS
Address Varies
Mountlake Terrace, WA 98043

DATE
08/05/20

VERSION NOTES

V1	07/14 Concept design
V2	07/31 Revise signs
V3	08/06 Revise signs
V4	08/22 Revise signs
V5	10/02 Revise signs
V6	11/19 Revise signs
V7	01/02 Revise signs
V8	02/20 Revise all concepts & signs
V9	02/24 Revise signs
V10	03/19 Add signs, revise narrative
V11	05/19 Add/revise signs, revise all B3
V12	05/22 Revise B3 & directional signs
V13	06/02 Revise B1 canopy details
V14	08/05 Revise per city comments
V15	

PAGE SCALE
1" = 80'-0"

PAGE #
07

SITE PLANS - OVERALL

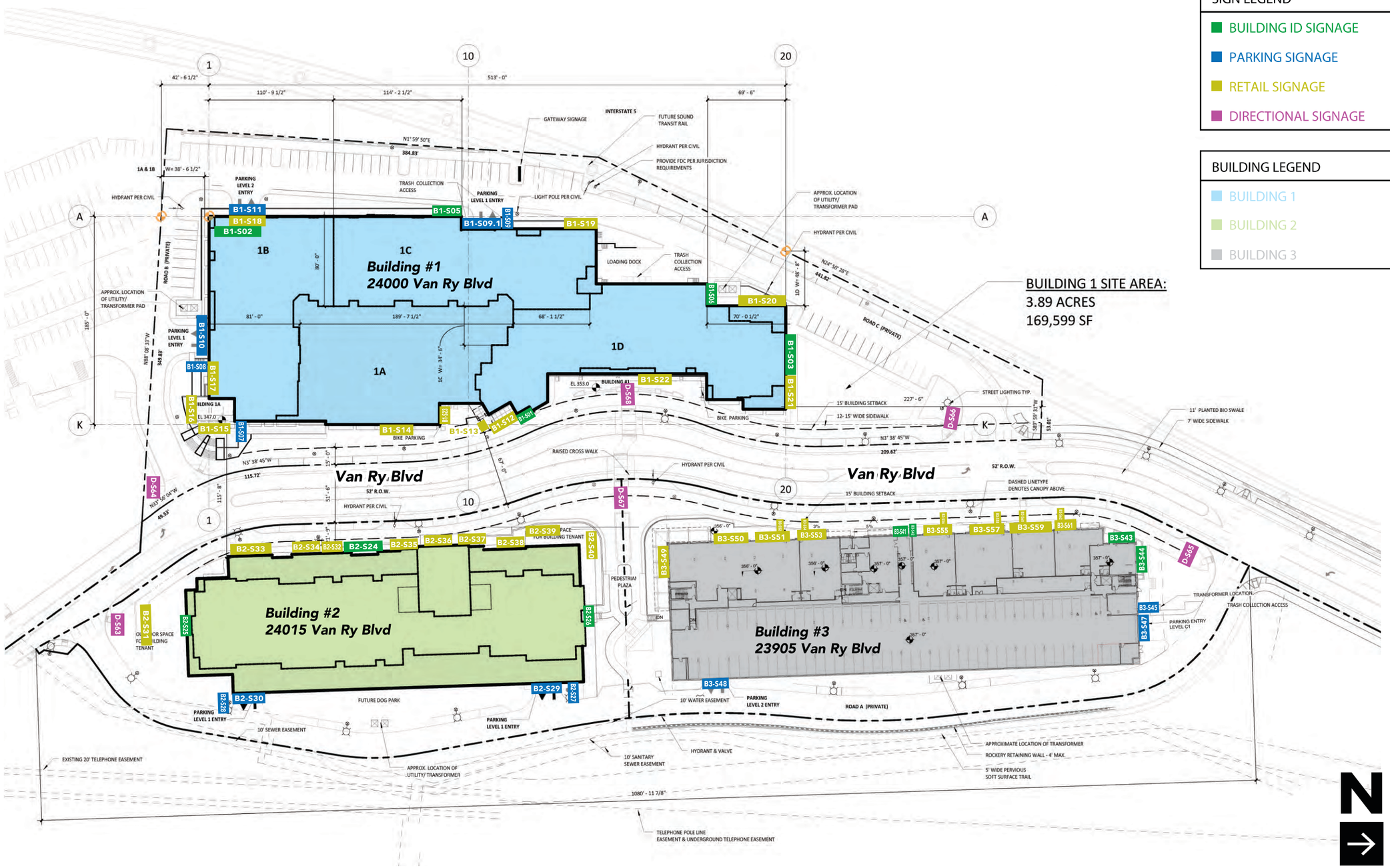

SIGN LEGEND

- BUILDING ID SIGNAGE
- PARKING SIGNAGE
- RETAIL SIGNAGE
- DIRECTIONAL SIGNAGE

BUILDING LEGEND

- BUILDING 1
- BUILDING 2
- BUILDING 3

A DESIGN STUDIO

MAIN CONTACT
Gracia Mueller
360.929.3077

CREATIVE
Brody Lund
425.359.7380

Additional information:
adesignstudioseattle.com

Follow us on social:
@adesignstudioseattle

COPYRIGHT
All artwork contained herein is the copyrighted property of A Design Studio Seattle. This includes, but is not limited to, logos, specifications, artwork and engineering. Any usage beyond internal reviews shall require our appoval and a separate design fee paid to A Design Studio Seattle. Usage rights can also be purchased (limited or complete) for an additional fee. Any unlawful distribution of said artwork is a violation of federal copyright laws.

PROJECT NAME
Terrace Station

PROJECT #
20-004

ADDRESS
Address Varies
Mountlake Terrace, WA 98043

DATE
08/05/20

VERSION NOTES

V1	07/14 Concept design
V2	07/31 Revise signs
V3	08/06 Revise signs
V4	08/22 Revise signs
V5	10/02 Revise signs
V6	11/19 Revise signs
V7	01/02 Revise signs
V8	02/20 Revise all concepts & signs
V9	02/24 Revise signs
V10	03/19 Add signs, revise narrative
V11	05/19 Add/revise signs, revise all B3
V12	05/22 Revise B3 & directional signs
V13	06/02 Revise B1 canopy details
V14	08/05 Revise per city comments
V15	

PAGE SCALE
1" = 90'-0"

PAGE #
08

SITE PLANS - OVERALL

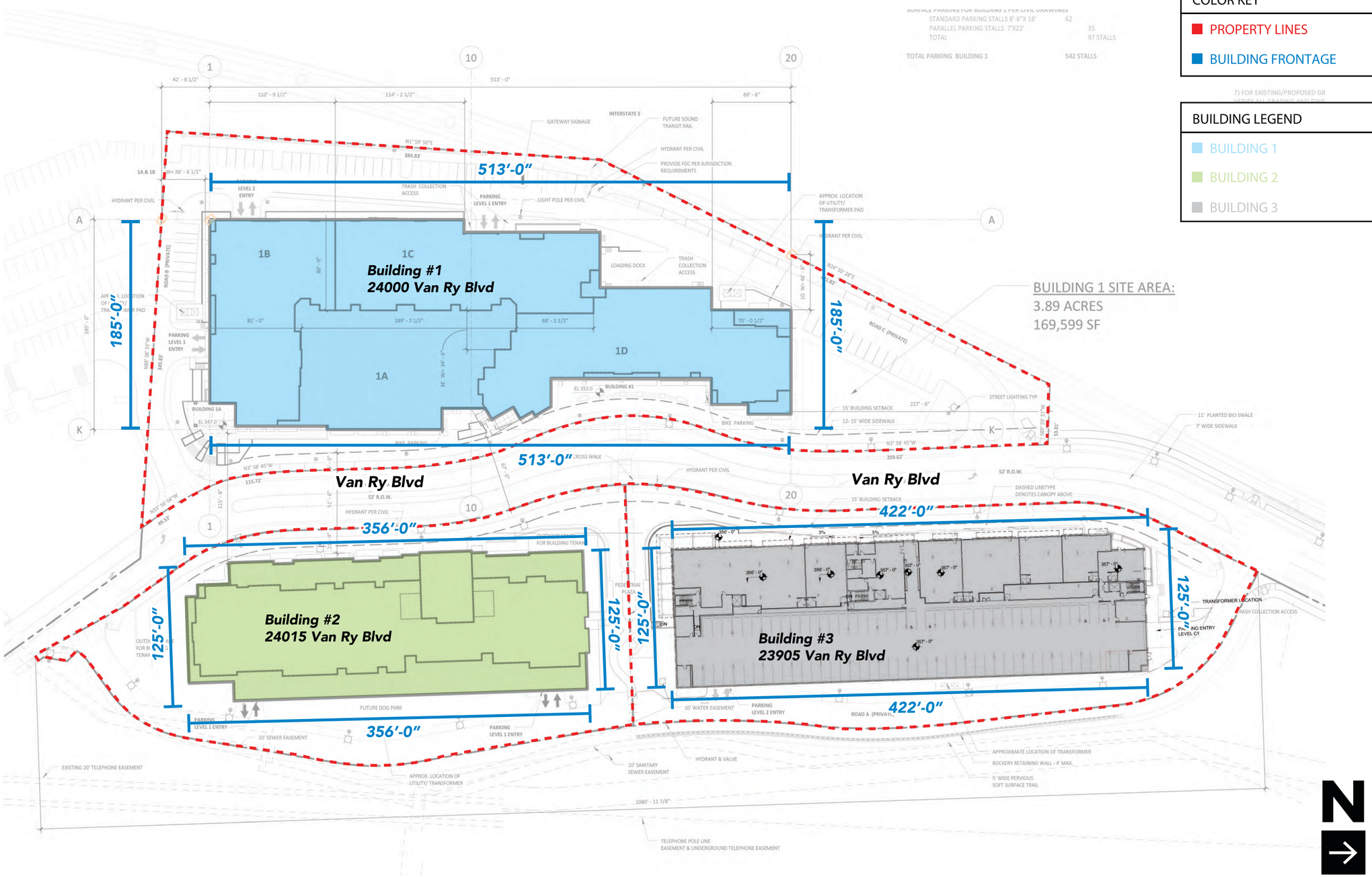

COLOR KEY
PROPERTY LINES
BUILDING FRONTAGE

BUILDING LEGEND
BUILDING 1
BUILDING 2
BUILDING 3

A DESIGN STUDIO

MAIN CONTACT
Gracia Mueller
360.929.3077

CREATIVE
Brody Lund
425.359.7380

Additional information:
adesignstudioseattle.com

Follow us on social:
@adesignstudioseattle

COPYRIGHT
All artwork contained herein is the copyrighted property of A Design Studio Seattle. This includes, but is not limited to, logos, specifications, artwork and engineering. Any usage beyond internal reviews shall require our appoval and a separate design fee paid to A Design Studio Seattle. Usage rights can also be purchased (limited or complete) for an additional fee. Any unlawful distribution of said artwork is a violation of federal copyright laws.

PROJECT NAME
Terrace Station

PROJECT #
20-004

ADDRESS
Address Varies
Mountlake Terrace, WA 98043

DATE
08/05/20

VERSION NOTES

V1	07/14 Concept design
V2	07/31 Revise signs
V3	08/06 Revise signs
V4	08/22 Revise signs
V5	10/02 Revise signs
V6	11/19 Revise signs
V7	01/02 Revise signs
V8	02/20 Revise all concepts & signs
V9	02/24 Revise signs
V10	03/19 Add signs, revise narrative
V11	05/19 Add/revise signs, revise all B3
V12	05/22 Revise B3 & directional signs
V13	06/02 Revise B1 canopy details
V14	08/05 Revise per city comments
V15	

PAGE SCALE
1" = 90'-0"

PAGE #
09

SITE PLANS - B1

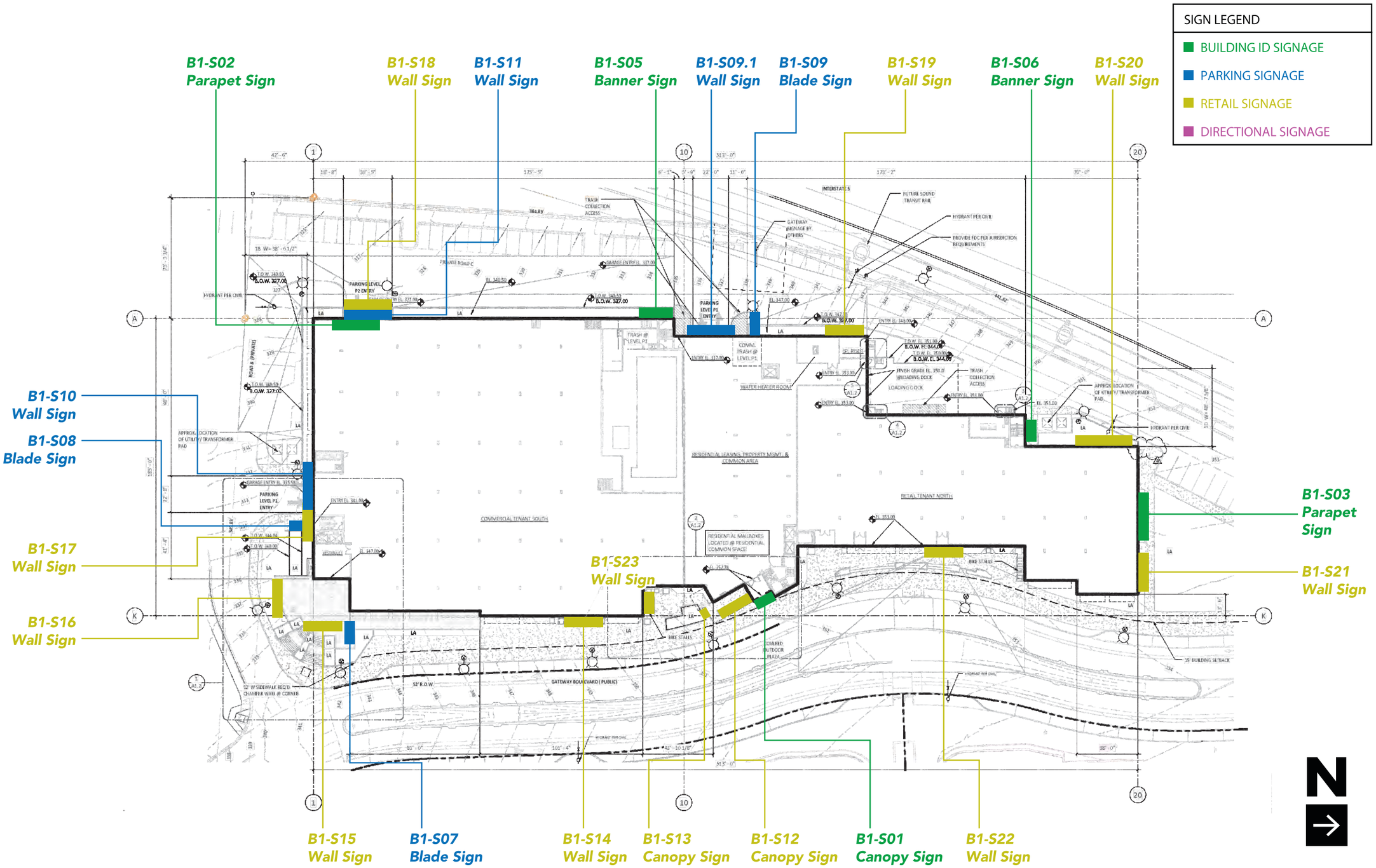

SIGN LEGEND
BUILDING ID SIGNAGE
PARKING SIGNAGE
RETAIL SIGNAGE
DIRECTIONAL SIGNAGE

A DESIGN STUDIO

MAIN CONTACT
Gracia Mueller
360.929.3077

CREATIVE
Brody Lund
425.359.7380

Additional information:
adesignstudioseattle.com

Follow us on social:
@adesignstudioseattle

COPYRIGHT
All artwork contained herein is the copyrighted property of A Design Studio Seattle. This includes, but is not limited to, logos, specifications, artwork and engineering. Any usage beyond internal reviews shall require our appoval and a separate design fee paid to A Design Studio Seattle. Usage rights can also be purchased (limited or complete) for an additional fee. Any unlawful distribution of said artwork is a violation of federal copyright laws.

PROJECT NAME
Terrace Station

PROJECT #
20-004

ADDRESS
24000 Van Ry Blvd
Mountlake Terrace, WA 98043

DATE
08/05/20

VERSION NOTES

V1	07/14 Concept design
V2	07/31 Revise signs
V3	08/06 Revise signs
V4	08/22 Revise signs
V5	10/02 Revise signs
V6	11/19 Revise signs
V7	01/02 Revise signs
V8	02/20 Revise all concepts & signs
V9	02/24 Revise signs
V10	03/19 Add signs, revise narrative
V11	05/19 Add/revise signs, revise all B3
V12	05/22 Revise B3 & directional signs
V13	06/02 Revise B1 canopy details
V14	08/05 Revise per city comments
V15	

PAGE SCALE
1" = 40'-0"

PAGE #
10

SITE PLANS - B2

Bldg 2 permitted to install building name signs consistent with signage for Bldg 1, namely B1-S02 and B1-S03 parapet signs

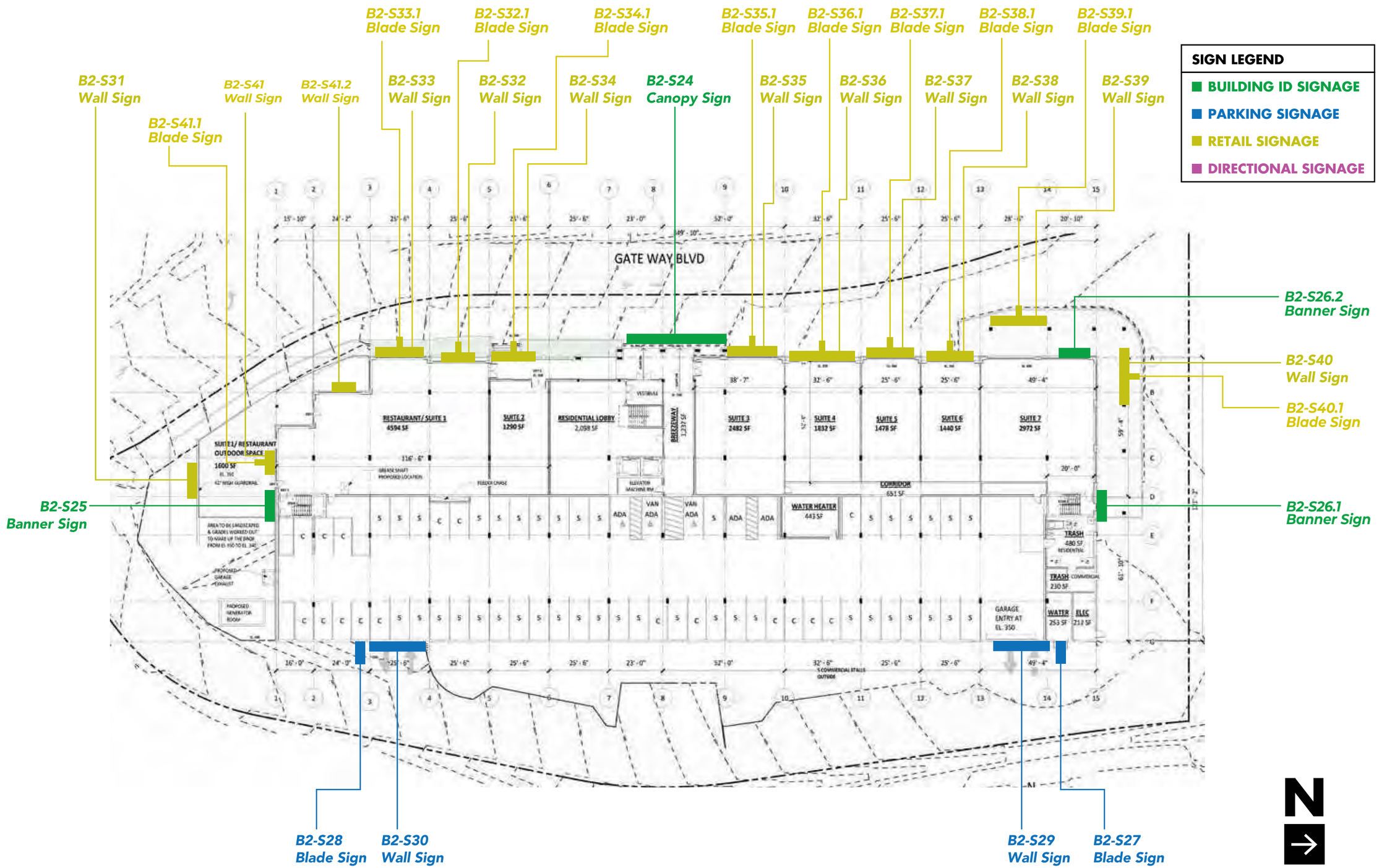

A DESIGN STUDIO

MAIN CONTACT
Gracia Mueller
360.929.3077

CREATIVE
Brody Lund
425.359.7380

Additional information:
adesignstudioseattle.com

Follow us on social:
@adesignstudioseattle

COPYRIGHT
All artwork contained herein is the copyrighted property of A Design Studio Seattle. This includes, but is not limited to, logos, specifications, artwork and engineering. Any usage beyond internal reviews shall require our appoval and a separate design fee paid to A Design Studio Seattle. Usage rights can also be purchased (limited or complete) for an additional fee. Any unlawful distribution of said artwork is a violation of federal copyright laws.

PROJECT NAME
Terrace Station

PROJECT #
20-004

ADDRESS
24015 Van Ry Blvd
Mountlake Terrace, WA 98043

DATE
08/05/20

VERSION NOTES

V1	07/14 Concept design
V2	07/31 Revise signs
V3	08/06 Revise signs
V4	08/22 Revise signs
V5	10/02 Revise signs
V6	11/19 Revise signs
V7	01/02 Revise signs
V8	02/20 Revise all concepts & signs
V9	02/24 Revise signs
V10	03/19 Add signs, revise narrative
V11	05/19 Add/revise signs, revise all B3
V12	05/22 Revise B3 & directional signs
V13	06/02 Revise B1 canopy details
V14	08/05 Revise per city comments
V15	

PAGE SCALE
1" = 40'-0"

PAGE #
11

SITE PLANS - B3

Bldg 3 permitted to install building name signs consistent with signage for Bldg 1, namely B1-S02 and B1-S03 parapet signs

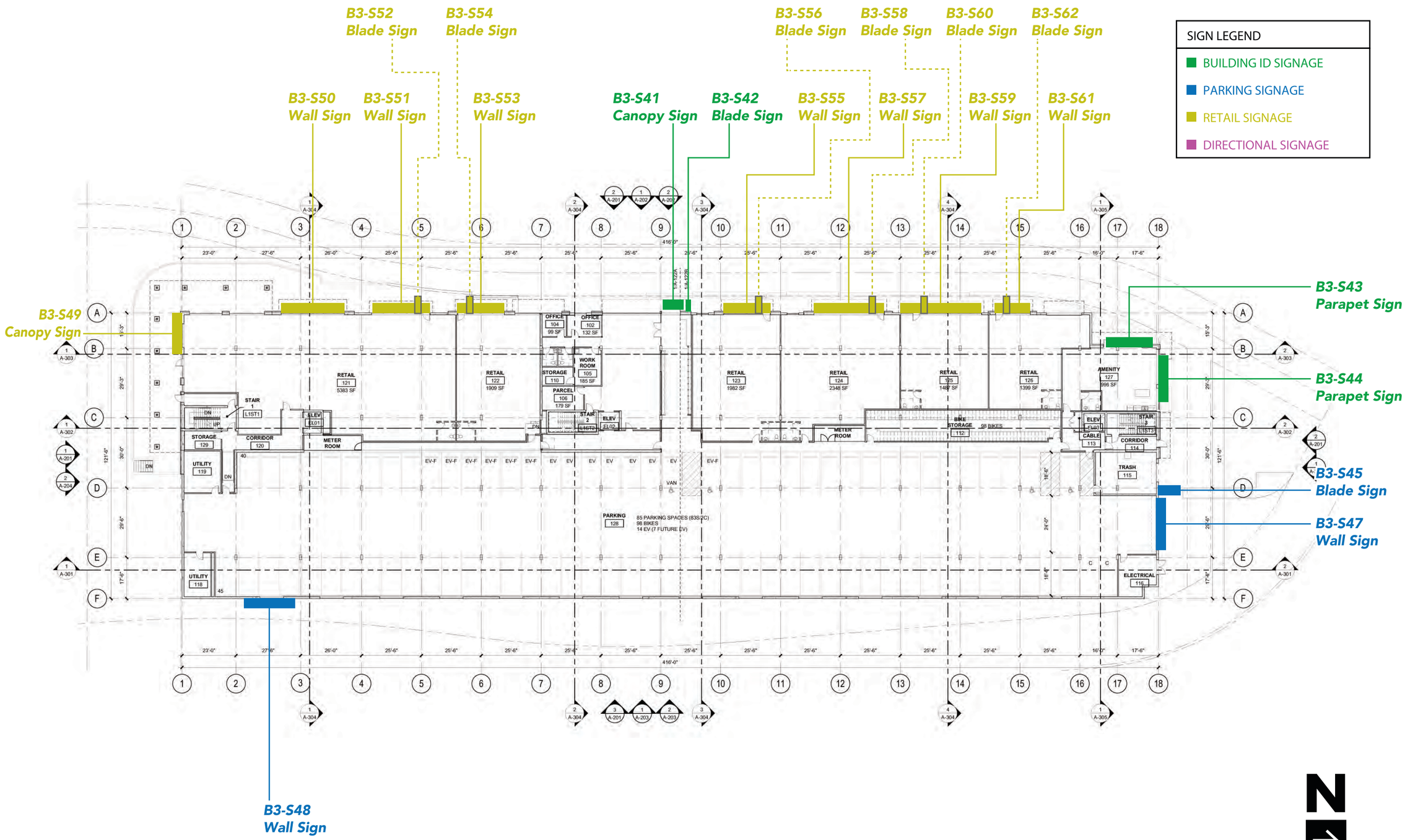

A DESIGN STUDIO

MAIN CONTACT
Gracia Mueller
360.929.3077

CREATIVE
Brody Lund
425.359.7380

Additional information:
adesignstudioseattle.com

Follow us on social:
@adesignstudioseattle

COPYRIGHT
All artwork contained herein is the copyrighted property of A Design Studio Seattle. This includes, but is not limited to, logos, specifications, artwork and engineering. Any usage beyond internal reviews shall require our appoval and a separate design fee paid to A Design Studio Seattle. Usage rights can also be purchased (limited or complete) for an additional fee. Any unlawful distribution of said artwork is a violation of federal copyright laws.

PROJECT NAME
Terrace Station

PROJECT #
20-004

ADDRESS
23905 Van Ry Blvd
Mountlake Terrace, WA 98043

DATE
08/05/20

VERSION NOTES

V1	07/14 Concept design
V2	07/31 Revise signs
V3	08/06 Revise signs
V4	08/22 Revise signs
V5	10/02 Revise signs
V6	11/19 Revise signs
V7	01/02 Revise signs
V8	02/20 Revise all concepts & signs
V9	02/24 Revise signs
V10	03/19 Add signs, revise narrative
V11	05/19 Add/revise signs, revise all B3
V12	05/22 Revise B3 & directional signs
V13	06/02 Revise B1 canopy details
V14	08/05 Revise per city comments
V15	

PAGE SCALE
1" = 40'-0"

PAGE #
12

BUILDING 1

A DESIGN STUDIO

MAIN CONTACT
Gracia Mueller
360.929.3077

CREATIVE
Brody Lund
425.359.7380

Additional information:
adesignstudioseattle.com

Follow us on social:
@adesignstudioseattle

COPYRIGHT
All artwork contained herein is the copyrighted property of A Design Studio Seattle. This includes, but is not limited to, logos, specifications, artwork and engineering. Any usage beyond internal reviews shall require our appoval and a separate design fee paid to A Design Studio Seattle. Usage rights can also be purchased (limited or complete) for an additional fee. Any unlawful distribution of said artwork is a violation of federal copyright laws.

PROJECT NAME
Terrace Station

PROJECT #
20-004

ADDRESS
24015 Van Ry Blvd
Mountlake Terrace, WA 98043

DATE
12/10/20

VERSION NOTES

V1
V2
V3
V4
V5
V6
V7
V8
V9
V10
V11
V12
V13
V14
V15

PAGE SCALE
N/A

PAGE #

SITE PLANS - B1

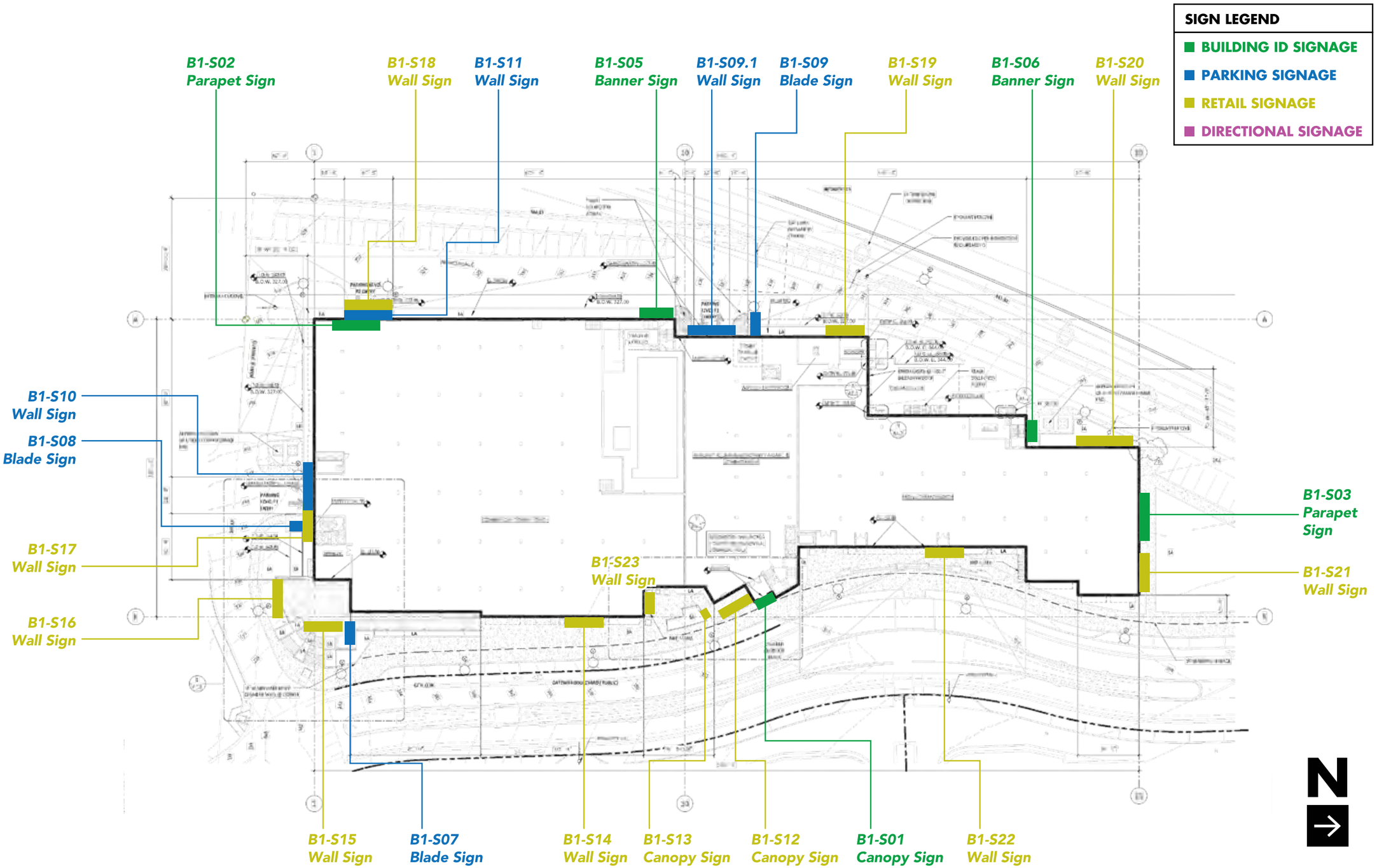

SIGN LEGEND

- BUILDING ID SIGNAGE
- PARKING SIGNAGE
- RETAIL SIGNAGE
- DIRECTIONAL SIGNAGE

A DESIGN STUDIO

MAIN CONTACT
Gracia Mueller
360.929.3077

CREATIVE
Brody Lund
425.359.7380

Additional information:
adesignstudioseattle.com

Follow us on social:
@adesignstudioseattle

COPYRIGHT
All artwork contained herein is the copyrighted property of A Design Studio Seattle. This includes, but is not limited to, logos, specifications, artwork and engineering. Any usage beyond internal reviews shall require our appoval and a separate design fee paid to A Design Studio Seattle. Usage rights can also be purchased (limited or complete) for an additional fee. Any unlawful distribution of said artwork is a violation of federal copyright laws.

PROJECT NAME
Terrace Station

PROJECT #
20-004

ADDRESS
24015 Van Ry Blvd
Mountlake Terrace, WA 98043

DATE
12/10/20

VERSION NOTES

V1
V2
V3
V4
V5
V6
V7
V8
V9
V10
V11
V12
V13
V14
V15

PAGE SCALE
1" = 40'-0"

PAGE #
14

B1 - PERSPECTIVE VIEWS

COLOR KEY

- BUILDING ID SIGNAGE
- RETAIL SIGNAGE
- PARKING SIGNAGE

East Elevation

B1-S16
Retail
Wall Sign

B1-S15
Retail
Wall Sign

B1-S07
Blade Sign

B1-S14
Retail
Wall Sign

A DESIGN STUDIO

MAIN CONTACT
Gracia Mueller
360.929.3077

CREATIVE
Brody Lund
425.359.7380

Additional information:
adesignstudioseattle.com

Follow us on social:
@adesignstudioseattle

COPYRIGHT
All artwork contained herein is the copyrighted property of A Design Studio Seattle. This includes, but is not limited to, logos, specifications, artwork and engineering. Any usage beyond internal reviews shall require our appoval and a separate design fee paid to A Design Studio Seattle. Usage rights can also be purchased (limited or complete) for an additional fee. Any unlawful distribution of said artwork is a violation of federal copyright laws.

PROJECT NAME
Terrace Station

PROJECT #
20-004

ADDRESS
24015 Van Ry Blvd
Mountlake Terrace, WA 98043

DATE
12/10/20

VERSION NOTES

V1
V2
V3
V4
V5
V6
V7
V8
V9
V10
V11
V12
V13
V14
V15

PAGE SCALE
As Noted

PAGE #
15

B1 - PERSPECTIVE VIEWS

COLOR KEY

- BUILDING ID SIGNAGE
- RETAIL SIGNAGE
- PARKING SIGNAGE

B1-S23
Wall Sign

B1-S03
Parapet Sign

Northeast Elevation

B1-S01
Canopy Sign

B1-S22
Wall Sign

B1-S21
Wall Sign

A DESIGN STUDIO

MAIN CONTACT
Gracia Mueller
360.929.3077

CREATIVE
Brody Lund
425.359.7380

Additional information:
adesignstudioseattle.com

Follow us on social:
@adesignstudioseattle

COPYRIGHT
All artwork contained herein is the copyrighted property of A Design Studio Seattle. This includes, but is not limited to, logos, specifications, artwork and engineering. Any usage beyond internal reviews shall require our appoval and a separate design fee paid to A Design Studio Seattle. Usage rights can also be purchased (limited or complete) for an additional fee. Any unlawful distribution of said artwork is a violation of federal copyright laws.

PROJECT NAME
Terrace Station

PROJECT #
20-004

ADDRESS
24015 Van Ry Blvd
Mountlake Terrace, WA 98043

DATE
12/10/20

VERSION NOTES

V1
V2
V3
V4
V5
V6
V7
V8
V9
V10
V11
V12
V13
V14
V15

PAGE SCALE
As Noted

PAGE #
16

B1 - PERSPECTIVE VIEWS

COLOR KEY
BUILDING ID SIGNAGE
RETAIL SIGNAGE
PARKING SIGNAGE

North Elevation

B1-S21
Wall Sign

B1-S03
Parapet Sign

B1-S06
Banner Sign

A DESIGN STUDIO

MAIN CONTACT
Gracia Mueller
360.929.3077

CREATIVE
Brody Lund
425.359.7380

Additional information:
adesignstudioseattle.com

Follow us on social:
@adesignstudioseattle

COPYRIGHT
All artwork contained herein is the copyrighted property of A Design Studio Seattle. This includes, but is not limited to, logos, specifications, artwork and engineering. Any usage beyond internal reviews shall require our appoval and a separate design fee paid to A Design Studio Seattle. Usage rights can also be purchased (limited or complete) for an additional fee. Any unlawful distribution of said artwork is a violation of federal copyright laws.

PROJECT NAME
Terrace Station

PROJECT #
20-004

ADDRESS
24015 Van Ry Blvd
Mountlake Terrace, WA 98043

DATE
12/10/20

VERSION NOTES

V1
V2
V3
V4
V5
V6
V7
V8
V9
V10
V11
V12
V13
V14
V15

PAGE SCALE
As Noted

PAGE #

B1 - PERSPECTIVE VIEWS

COLOR KEY

- **BUILDING ID SIGNAGE**
- **RETAIL SIGNAGE**
- **PARKING SIGNAGE**

West Elevation

B1-S20
Wall Sign

B1-S06
Banner Sign

B1-S19
Wall Sign

A DESIGN STUDIO

MAIN CONTACT
Gracia Mueller
360.929.3077

CREATIVE
Brody Lund
425.359.7380

Additional information:
adesignstudioseattle.com

Follow us on social:
@adesignstudioseattle

COPYRIGHT
All artwork contained herein is the copyrighted property of A Design Studio Seattle. This includes, but is not limited to, logos, specifications, artwork and engineering. Any usage beyond internal reviews shall require our appoval and a separate design fee paid to A Design Studio Seattle. Usage rights can also be purchased (limited or complete) for an additional fee. Any unlawful distribution of said artwork is a violation of federal copyright laws.

PROJECT NAME
Terrace Station

PROJECT #
20-004

ADDRESS
24015 Van Ry Blvd
Mountlake Terrace, WA 98043

DATE
12/10/20

VERSION NOTES

V1
V2
V3
V4
V5
V6
V7
V8
V9
V10
V11
V12
V13
V14
V15

PAGE SCALE
As Noted

PAGE #
18

B1 - PERSPECTIVE VIEWS

COLOR KEY
BUILDING ID SIGNAGE
RETAIL SIGNAGE
PARKING SIGNAGE

Southwest Elevation

B1-S20 Wall Sign

B1-S19 Wall Sign

B1-S09 Blade Sign

B1-S09.1 Wall Sign

B1-S05 Banner Sign

B1-S18 Wall Sign

B1-S11 Wall Sign

B1-S10 Wall Sign

B1-S08 Blade Sign

B1-S17 Wall Sign

B1-S16 Wall Sign

A DESIGN STUDIO

MAIN CONTACT
Gracia Mueller
360.929.3077

CREATIVE
Brody Lund
425.359.7380

Additional information:
adesignstudioseattle.com

Follow us on social:
@adesignstudioseattle

COPYRIGHT
All artwork contained herein is the copyrighted property of A Design Studio Seattle. This includes, but is not limited to, logos, specifications, artwork and engineering. Any usage beyond internal reviews shall require our appoval and a separate design fee paid to A Design Studio Seattle. Usage rights can also be purchased (limited or complete) for an additional fee. Any unlawful distribution of said artwork is a violation of federal copyright laws.

PROJECT NAME
Terrace Station

PROJECT #
20-004

ADDRESS
24015 Van Ry Blvd
Mountlake Terrace, WA 98043

DATE
12/10/20

VERSION NOTES

V1
V2
V3
V4
V5
V6
V7
V8
V9
V10
V11
V12
V13
V14
V15

PAGE SCALE
As Noted

PAGE #
19

B1 - ELEVATIONS

COLOR KEY
BUILDING ID SIGNAGE
RETAIL SIGNAGE
PARKING SIGNAGE

A DESIGN STUDIO

MAIN CONTACT
Gracia Mueller
360.929.3077

CREATIVE
Brody Lund
425.359.7380

Additional information:
adesignstudioseattle.com

Follow us on social:
@adesignstudioseattle

COPYRIGHT
All artwork contained herein is the copyrighted property of A Design Studio Seattle. This includes, but is not limited to, logos, specifications, artwork and engineering. Any usage beyond internal reviews shall require our appoval and a separate design fee paid to A Design Studio Seattle. Usage rights can also be purchased (limited or complete) for an additional fee. Any unlawful distribution of said artwork is a violation of federal copyright laws.

PROJECT NAME
Terrace Station

PROJECT #
20-004

ADDRESS
24015 Van Ry Blvd
Mountlake Terrace, WA 98043

DATE
12/10/20

VERSION NOTES

V1
V2
V3
V4
V5
V6
V7
V8
V9
V10
V11
V12
V13
V14
V15

PAGE SCALE
1" = 30'-0"

PAGE #

B1 - ELEVATIONS

COLOR KEY

- BUILDING ID SIGNAGE
- RETAIL SIGNAGE
- PARKING SIGNAGE

2 EAST ELEVATION (NORTH)

B1-S12
Canopy Sign

B1-S01
Canopy Sign

B1-S22
Wall Sign

A DESIGN STUDIO

MAIN CONTACT
Gracia Mueller
360.929.3077

CREATIVE
Brody Lund
425.359.7380

Additional information:
adesignstudioseattle.com

Follow us on social:
@adesignstudioseattle

COPYRIGHT
All artwork contained herein is the copyrighted property of A Design Studio Seattle. This includes, but is not limited to, logos, specifications, artwork and engineering. Any usage beyond internal reviews shall require our appoval and a separate design fee paid to A Design Studio Seattle. Usage rights can also be purchased (limited or complete) for an additional fee. Any unlawful distribution of said artwork is a violation of federal copyright laws.

PROJECT NAME
Terrace Station

PROJECT #
20-004

ADDRESS
24015 Van Ry Blvd
Mountlake Terrace, WA 98043

DATE
12/10/20

VERSION NOTES

V1
V2
V3
V4
V5
V6
V7
V8
V9
V10
V11
V12
V13
V14
V15

PAGE SCALE
1" = 30'-0"

PAGE #
21

B1 - ELEVATIONS

COLOR KEY

- BUILDING ID SIGNAGE
- RETAIL SIGNAGE
- PARKING SIGNAGE

B1-S21
Wall Sign

B1-S03
Parapet Sign

B1-S06
Banner Sign

A DESIGN STUDIO

MAIN CONTACT
Gracia Mueller
360.929.3077

CREATIVE
Brody Lund
425.359.7380

Additional information:
adesignstudioseattle.com

Follow us on social:
@adesignstudioseattle

COPYRIGHT
All artwork contained herein is the copyrighted property of A Design Studio Seattle. This includes, but is not limited to, logos, specifications, artwork and engineering. Any usage beyond internal reviews shall require our appoval and a separate design fee paid to A Design Studio Seattle. Usage rights can also be purchased (limited or complete) for an additional fee. Any unlawful distribution of said artwork is a violation of federal copyright laws.

PROJECT NAME
Terrace Station

PROJECT #
20-004

ADDRESS
24015 Van Ry Blvd
Mountlake Terrace, WA 98043

DATE
12/10/20

VERSION NOTES

V1
V2
V3
V4
V5
V6
V7
V8
V9
V10
V11
V12
V13
V14
V15

PAGE SCALE
1" = 30'-0"

PAGE #
22

B1 - ELEVATIONS

COLOR KEY
BUILDING ID SIGNAGE
RETAIL SIGNAGE
PARKING SIGNAGE

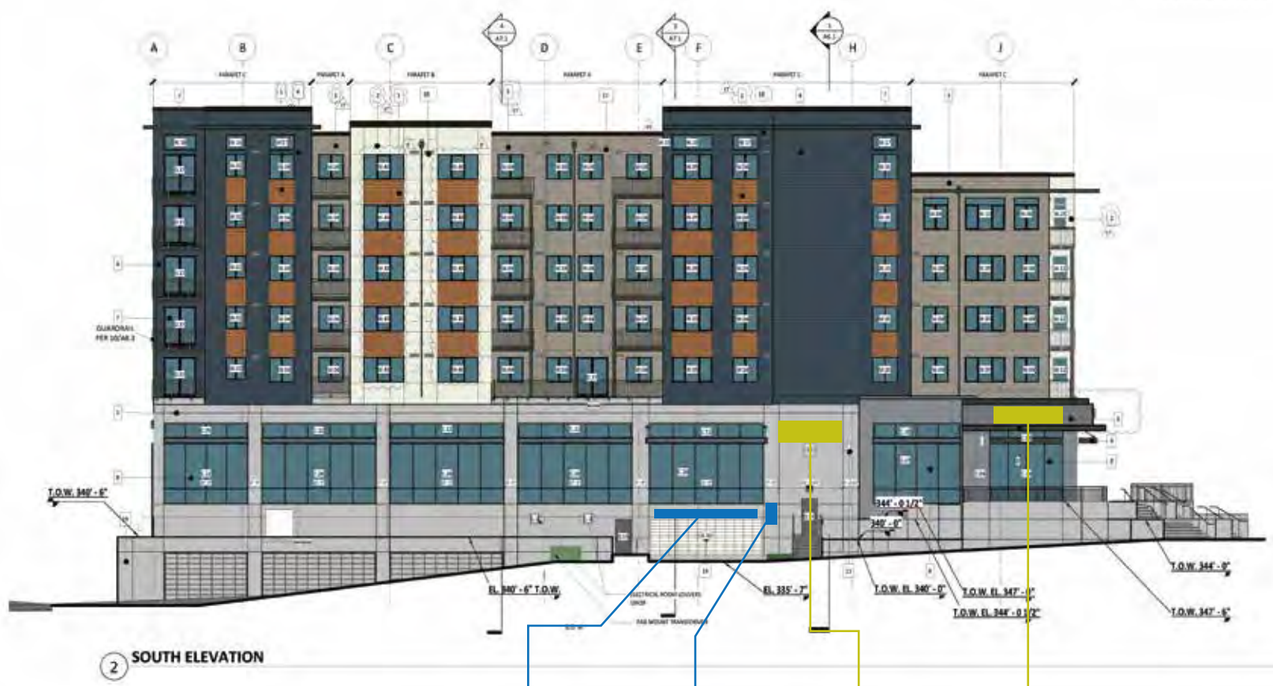

B1-S10
Wall Sign

B1-S08
Blade Sign

B1-S17
Wall Sign

B1-S16
Wall Sign

A DESIGN STUDIO

MAIN CONTACT
Gracia Mueller
360.929.3077

CREATIVE
Brody Lund
425.359.7380

Additional information:
adesignstudioseattle.com

Follow us on social:
@adesignstudioseattle

COPYRIGHT
All artwork contained herein is the copyrighted property of A Design Studio Seattle. This includes, but is not limited to, logos, specifications, artwork and engineering. Any usage beyond internal reviews shall require our appoval and a separate design fee paid to A Design Studio Seattle. Usage rights can also be purchased (limited or complete) for an additional fee. Any unlawful distribution of said artwork is a violation of federal copyright laws.

PROJECT NAME
Terrace Station

PROJECT #
20-004

ADDRESS
24015 Van Ry Blvd
Mountlake Terrace, WA 98043

DATE
12/10/20

VERSION NOTES

V1
V2
V3
V4
V5
V6
V7
V8
V9
V10
V11
V12
V13
V14
V15

PAGE SCALE
1" = 30'-0"

PAGE #

B1 - ELEVATIONS

COLOR KEY
BUILDING ID SIGNAGE
RETAIL SIGNAGE
PARKING SIGNAGE

B1-S20
Wall Sign

B1-S19
Wall Sign

B1-S09
Blade Sign

B1-S09.1
Wall Sign

B1-S05
Banner Sign

A DESIGN STUDIO

MAIN CONTACT
Gracia Mueller
360.929.3077

CREATIVE
Brody Lund
425.359.7380

Additional information:
adesignstudioseattle.com

Follow us on social:
@adesignstudioseattle

COPYRIGHT
All artwork contained herein is the copyrighted property of A Design Studio Seattle. This includes, but is not limited to, logos, specifications, artwork and engineering. Any usage beyond internal reviews shall require our appoval and a separate design fee paid to A Design Studio Seattle. Usage rights can also be purchased (limited or complete) for an additional fee. Any unlawful distribution of said artwork is a violation of federal copyright laws.

PROJECT NAME
Terrace Station

PROJECT #
20-004

ADDRESS
24015 Van Ry Blvd
Mountlake Terrace, WA 98043

DATE
12/10/20

VERSION NOTES

V1
V2
V3
V4
V5
V6
V7
V8
V9
V10
V11
V12
V13
V14
V15

PAGE SCALE
1" = 30'-0"

PAGE #

B1 - ELEVATIONS

COLOR KEY
BUILDING ID SIGNAGE
RETAIL SIGNAGE
PARKING SIGNAGE

2 WEST ELEVATION SOUTH

A DESIGN STUDIO

MAIN CONTACT
Gracia Mueller
360.929.3077

CREATIVE
Brody Lund
425.359.7380

Additional information:
adesignstudioseattle.com

Follow us on social:
@adesignstudioseattle

COPYRIGHT
All artwork contained herein is the copyrighted property of A Design Studio Seattle. This includes, but is not limited to, logos, specifications, artwork and engineering. Any usage beyond internal reviews shall require our appoval and a separate design fee paid to A Design Studio Seattle. Usage rights can also be purchased (limited or complete) for an additional fee. Any unlawful distribution of said artwork is a violation of federal copyright laws.

PROJECT NAME
Terrace Station

PROJECT #
20-004

ADDRESS
24015 Van Ry Blvd
Mountlake Terrace, WA 98043

DATE
12/10/20

VERSION NOTES

V1
V2
V3
V4
V5
V6
V7
V8
V9
V10
V11
V12
V13
V14
V15

PAGE SCALE
1" = 30'-0"

PAGE #

B1 - ELEVATIONS

COLOR KEY
BUILDING ID SIGNAGE
RETAIL SIGNAGE
PARKING SIGNAGE

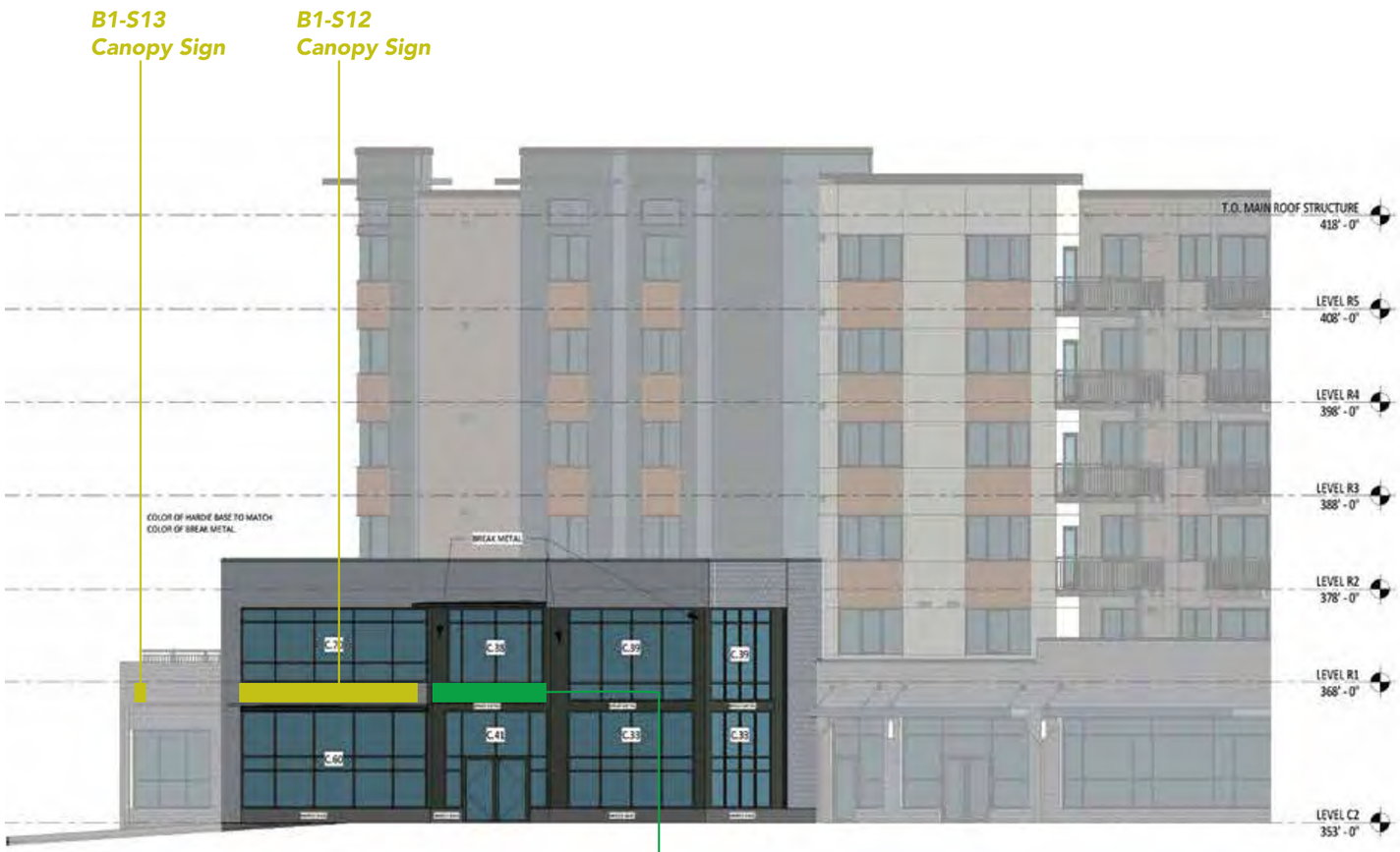

East Elevation - Covered Outdoor Plaza

Southeast Elevation - Covered Outdoor Plaza

B1-S01
Canopy Sign

A DESIGN STUDIO

MAIN CONTACT
Gracia Mueller
360.929.3077

CREATIVE
Brody Lund
425.359.7380

Additional information:
adesignstudioseattle.com

Follow us on social:
@adesignstudioseattle

COPYRIGHT
All artwork contained herein is the copyrighted property of A Design Studio Seattle. This includes, but is not limited to, logos, specifications, artwork and engineering. Any usage beyond internal reviews shall require our appoval and a separate design fee paid to A Design Studio Seattle. Usage rights can also be purchased (limited or complete) for an additional fee. Any unlawful distribution of said artwork is a violation of federal copyright laws.

PROJECT NAME
Terrace Station

PROJECT #
20-004

ADDRESS
24015 Van Ry Blvd
Mountlake Terrace, WA 98043

DATE
12/10/20

VERSION NOTES

V1
V2
V3
V4
V5
V6
V7
V8
V9
V10
V11
V12
V13
V14
V15

PAGE SCALE
1" = 30'-0"

PAGE #
26

B1 - ELEVATIONS

COLOR KEY
BUILDING ID SIGNAGE
RETAIL SIGNAGE
PARKING SIGNAGE

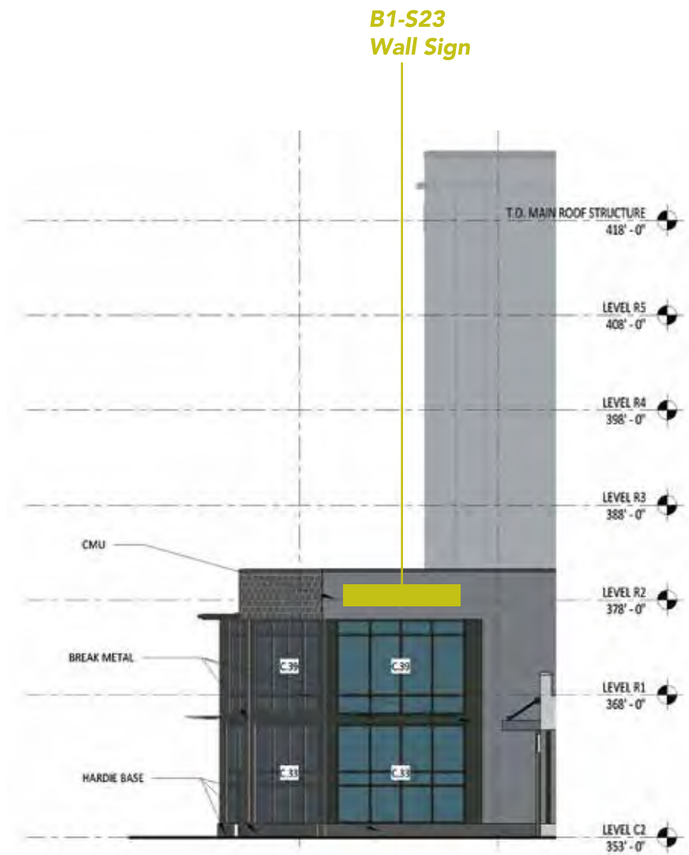

North Elevation - Covered Outdoor Plaza

A DESIGN STUDIO

MAIN CONTACT
Gracia Mueller
360.929.3077

CREATIVE
Brody Lund
425.359.7380

Additional information:
adesignstudioseattle.com

Follow us on social:
@adesignstudioseattle

COPYRIGHT
All artwork contained herein is the copyrighted property of A Design Studio Seattle. This includes, but is not limited to, logos, specifications, artwork and engineering. Any usage beyond internal reviews shall require our appoval and a separate design fee paid to A Design Studio Seattle. Usage rights can also be purchased (limited or complete) for an additional fee. Any unlawful distribution of said artwork is a violation of federal copyright laws.

PROJECT NAME
Terrace Station

PROJECT #
20-004

ADDRESS
24015 Van Ry Blvd
Mountlake Terrace, WA 98043

DATE
12/10/20

VERSION NOTES

V1
V2
V3
V4
V5
V6
V7
V8
V9
V10
V11
V12
V13
V14
V15

PAGE SCALE
1" = 30'-0"

PAGE #

B1 - SIGN SCHEDULE

SIGN #	DESCRIPTION – BUILDING 1	
B1-S01	S/F ILLUMINATED CANOPY SIGN ▪ QTY (1) 12'-0"W x 3'-0"H ▪ SIGN AREA: 36.0 SQ FT	PAGE 29-33
B1-S02	S/F ILLUMINATED PARAPET SIGN ▪ QTY (1) 25'-0"W x 2'-3 1/4"H ▪ SIGN AREA: 41.9 SQ FT	PAGE 34-36
~~B1-S02.1~~	~~S/F ILLUMINATED PARAPET SIGN ▪ QTY (1) 25'-0"W x 2'-3 1/4"H ▪ SIGN AREA: 41.9 SQ FT~~	
B1-S03	S/F ILLUMINATED PARAPET SIGN ▪ QTY (1) 25'-0"W x 2'-3 1/4"H ▪ SIGN AREA: 41.9 SQ FT	PAGE 37-39
~~B1-S04~~	~~S/F NON-ILLUM. TEMP. BANNER SIGN ▪ QTY (1) 4'-4"W x 26'-7"H ▪ SIGN AREA: 115.2 SQ FT~~	
B1-S05	S/F NON-ILLUM. TEMP. BANNER SIGN ▪ QTY (1) 4'-4"W x 26'-7"H ▪ SIGN AREA: 115.2 SQ FT	PAGE 40, 42-43
B1-S06	S/F NON-ILLUM. TEMP. BANNER SIGN ▪ QTY (1) 4'-4"W x 26'-7"H ▪ SIGN AREA: 115.2 SQ FT	PAGE 41-43
B1-S07	D/F ILLUMINATED BLADE SIGN ▪ QTY (1) 2'-0"W x 2'-2 1/8"H ▪ SIGN AREA: 5.3 SQ FT	PAGE 44, 47-48
B1-S08	D/F ILLUMINATED BLADE SIGN ▪ QTY (1) 2'-0"W x 2'-2 1/8"H ▪ SIGN AREA: 5.3 SQ FT	PAGE 45, 47, 49
B1-S09	D/F ILLUMINATED BLADE SIGN ▪ QTY (1) 2'-0"W x 2'-2 1/8"H ▪ SIGN AREA: 5.3 SQ FT	PAGE 46-47, 50
B1-S09.1	S/F NON-ILLUMINATED WALL SIGN ▪ QTY (1) 22'-0"W x 1'-6"H ▪ SIGN AREA: 33.0 SQ FT	PAGE 51-52
B1-S10	S/F NON-ILLUMINATED WALL SIGN ▪ QTY (1) 22'-0"W x 2'-0"H ▪ SIGN AREA: 44.0 SQ FT	PAGE 54-56
B1-S11	S/F NON-ILLUMINATED WALL SIGN ▪ QTY (1) 22'-0"W x 2'-0"H ▪ SIGN AREA: 44.0 SQ FT	PAGE 57-59
B1-S12	S/F ILLUMINATED CANOPY SIGN ▪ QTY (1) 20'-0"W x 2'-0"H ▪ SIGN AREA: 40.0 SQ FT	PAGE 60-63
B1-S13	S/F ILLUMINATED CANOPY SIGN ▪ QTY (1) 10'-10"W x 3'-4"H ▪ SIGN AREA: 36.1 SQ FT	PAGE 64-67
B1-S14	S/F ILLUMINATED WALL SIGN ▪ QTY (1) 16'-0"W x 2'-6"H ▪ SIGN AREA: 40.0 SQ FT	PAGE 68-69
B1-S15	S/F ILLUMINATED WALL SIGN ▪ QTY (1) 16'-0"W x 2'-6"H ▪ SIGN AREA: 40.0 SQ FT	PAGE 70-71
B1-S16	S/F ILLUMINATED WALL SIGN ▪ QTY (1) 16'-0"W x 2'-6"H ▪ SIGN AREA: 40.0 SQ FT	PAGE 72-73
B1-S17	S/F ILLUMINATED WALL SIGN ▪ QTY (1) 16'-0"W x 2'-6"H ▪ SIGN AREA: 40.0 SQ FT	PAGE 74-75
B1-S18	S/F ILLUMINATED WALL SIGN ▪ QTY (1) 16'-0"W x 2'-6"H ▪ SIGN AREA: 40.0 SQ FT	PAGE 76-77
B1-S19	S/F ILLUMINATED WALL SIGN ▪ QTY (1) 12'-0"W x 3'-4"H ▪ SIGN AREA: 40.0 SQ FT	PAGE 78-79
B1-S20	S/F ILLUMINATED WALL SIGN ▪ QTY (1) 20'-6"W x 1'-8"H ▪ SIGN AREA: 34.2 SQ FT	PAGE 80-81
B1-S21	S/F ILLUMINATED WALL SIGN ▪ QTY (1) 16'-0"W x 2'-6"H ▪ SIGN AREA: 40.0 SQ FT	PAGE 82-83
B1-S22	S/F ILLUMINATED WALL SIGN ▪ QTY (1) 16'-0"W x 2'-6"H ▪ SIGN AREA: 40.0 SQ FT	PAGE 84-85
B1-S23	S/F ILLUMINATED WALL SIGN ▪ QTY (1) 16'-0"W x 2'-6"H ▪ SIGN AREA: 40.0 SQ FT	PAGE 86-87

A DESIGN STUDIO

MAIN CONTACT
Gracia Mueller
360.929.3077

CREATIVE
Brody Lund
425.359.7380

Additional information:
adesignstudioseattle.com

Follow us on social:
@adesignstudioseattle

COPYRIGHT
All artwork contained herein is the copyrighted property of A Design Studio Seattle. This includes, but is not limited to, logos, specifications, artwork and engineering. Any usage beyond internal reviews shall require our appoval and a separate design fee paid to A Design Studio Seattle. Usage rights can also be purchased (limited or complete) for an additional fee. Any unlawful distribution of said artwork is a violation of federal copyright laws.

PROJECT NAME
Terrace Station

PROJECT #
20-004

ADDRESS
24015 Van Ry Blvd
Mountlake Terrace, WA 98043

DATE
12/10/20

VERSION NOTES

V1
V2
V3
V4
V5
V6
V7
V8
V9
V10
V11
V12
V13
V14
V15

PAGE SCALE
N/A

PAGE #
28

B1-S01 - ELEVATIONS

Sign Area: 36.0 Square Feet

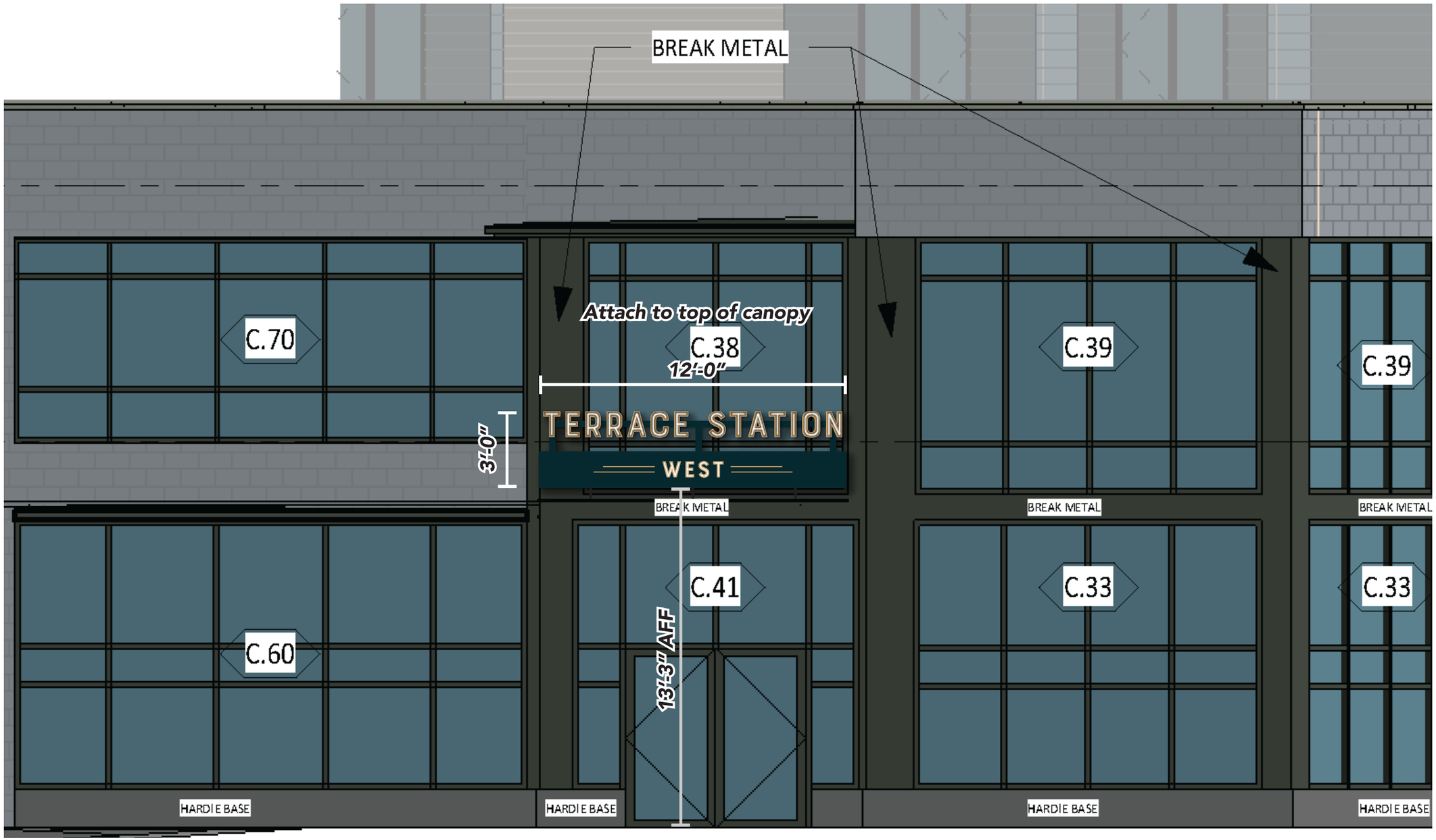

B1 East Elevation - Covered Outdoor Plaza

A DESIGN STUDIO

MAIN CONTACT
Gracia Mueller
360.929.3077

CREATIVE
Brody Lund
425.359.7380

Additional information:
adesignstudioseattle.com

Follow us on social:
@adesignstudioseattle

COPYRIGHT
All artwork contained herein is the copyrighted property of A Design Studio Seattle. This includes, but is not limited to, logos, specifications, artwork and engineering. Any usage beyond internal reviews shall require our appoval and a separate design fee paid to A Design Studio Seattle. Usage rights can also be purchased (limited or complete) for an additional fee. Any unlawful distribution of said artwork is a violation of federal copyright laws.

PROJECT NAME
Terrace Station

PROJECT #
20-004

ADDRESS
24000 Van Ry Blvd
Mountlake Terrace, WA 98043

DATE
08/05/20

VERSION NOTES

V1	07/14 Concept design
V2	07/31 Revise signs
V3	08/06 Revise signs
V4	08/22 Revise signs
V5	10/02 Revise signs
V6	11/19 Revise signs
V7	01/02 Revise signs
V8	02/20 Revise all concepts & signs
V9	02/24 Revise signs
V10	03/19 Add signs, revise narrative
V11	05/19 Add/revise signs, revise all B3
V12	05/22 Revise B3 & directional signs
V13	06/02 Revise B1 canopy details
V14	08/05 Revise per city comments
V15	

PAGE SCALE
1/4" = 1'-0"

PAGE #
29

B1-S01 - DETAILS

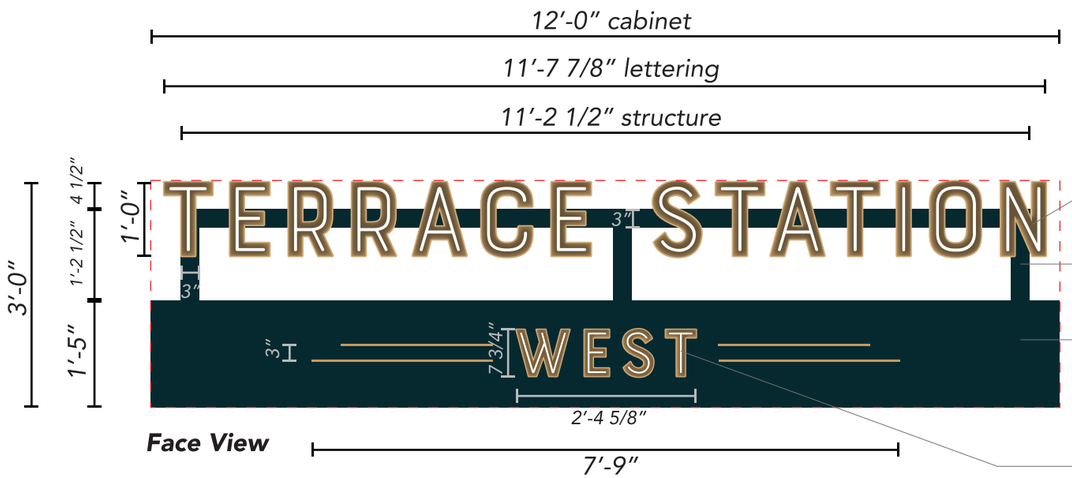

Face View

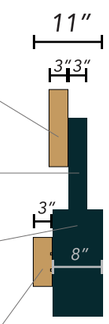

End View

3″ Alum. open pan channel letters. Paint faces and returns gold. 12mm white single tube neon.

3″ alum. square tube supports. Paint navy, satin finish.

8″ alum. sign cabinet. Removable faces. Paint navy, satin finish. 1/2″ acrylic push through graphics. Gold translucent vinyl applied to faces.

3″ Alum. open pan channel letters. Paint faces and returns gold. 8mm white single tube neon.

Internal power supply.

Drill & Tap 3/8″ bolts. 2 places minimum every 4′-0″.

Sign B1-S01: *Manufacture & install (1) single face illuminated canopy sign with neon open pan channel lettering.*

Sign Area: 36.0 Square Feet

Sign Weight: 200 lbs

CLIENT TO PROVIDE
20 AMP / 120 VOLT
DEDICATED SIGN CIRCUIT WITHIN
6 FT OF SIGN LOCATION

A DESIGN STUDIO

MAIN CONTACT
Gracia Mueller
360.929.3077

CREATIVE
Brody Lund
425.359.7380

Additional information:
adesignstudioseattle.com

Follow us on social:
@adesignstudioseattle

COPYRIGHT
All artwork contained herein is the copyrighted property of A Design Studio Seattle. This includes, but is not limited to, logos, specifications, artwork and engineering. Any usage beyond internal reviews shall require our appoval and a separate design fee paid to A Design Studio Seattle. Usage rights can also be purchased (limited or complete) for an additional fee. Any unlawful distribution of said artwork is a violation of federal copyright laws.

PROJECT NAME
Terrace Station

PROJECT #
20-004

ADDRESS
24000 Van Ry Blvd
Mountlake Terrace, WA 98043

DATE
08/05/20

VERSION NOTES

V1	07/14 Concept design
V2	07/31 Revise signs
V3	08/06 Revise signs
V4	08/22 Revise signs
V5	10/02 Revise signs
V6	11/19 Revise signs
V7	01/02 Revise signs
V8	02/20 Revise all concepts & signs
V9	02/24 Revise signs
V10	03/19 Add signs, revise narrative
V11	05/19 Add/revise signs, revise all B3
V12	05/22 Revise B3 & directional signs
V13	06/02 Revise B1 canopy details
V14	08/05 Revise per city comments
V15	

PAGE SCALE
1/2″ = 1′-0″

PAGE #
30

B1-S01 - ATTACHMENT DETAILS

Glass to be installed AFTER knife plates: openings cut into glass to accomodate knife plates.

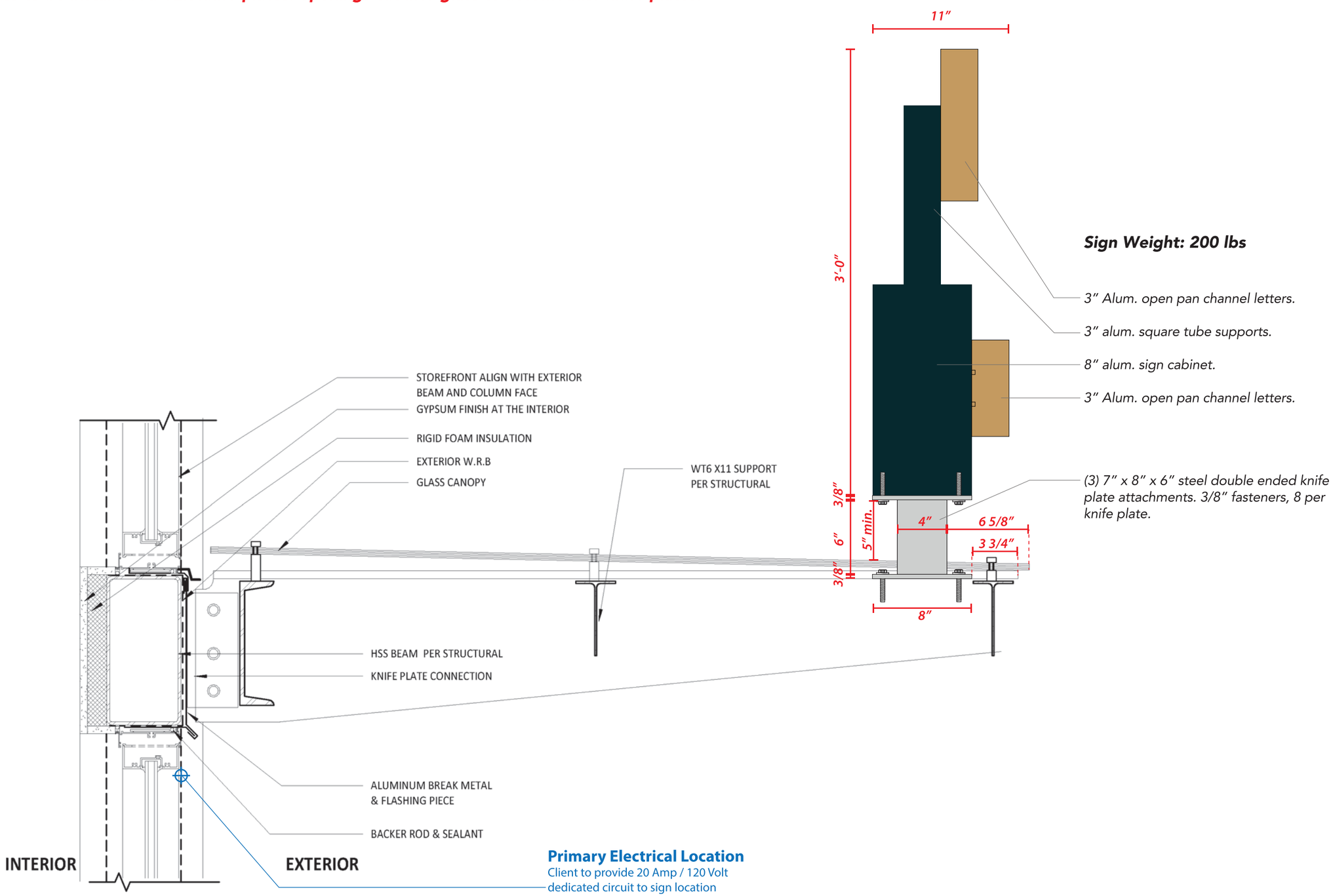

1 BEAM DETAIL AT VESTIBULE ENTRY CANOPY

SCALE: 1 1/2" = 1'-0"

A DESIGN STUDIO

MAIN CONTACT
Gracia Mueller
360.929.3077

CREATIVE
Brody Lund
425.359.7380

Additional information:
adesignstudioseattle.com

Follow us on social:
@adesignstudioseattle

COPYRIGHT
All artwork contained herein is the copyrighted property of A Design Studio Seattle. This includes, but is not limited to, logos, specifications, artwork and engineering. Any usage beyond internal reviews shall require our appoval and a separate design fee paid to A Design Studio Seattle. Usage rights can also be purchased (limited or complete) for an additional fee. Any unlawful distribution of said artwork is a violation of federal copyright laws.

PROJECT NAME
Terrace Station

PROJECT #
20-004

ADDRESS
24000 Van Ry Blvd
Mountlake Terrace, WA 98043

DATE
08/05/20

VERSION NOTES

V1	07/14 Concept design
V2	07/31 Revise signs
V3	08/06 Revise signs
V4	08/22 Revise signs
V5	10/02 Revise signs
V6	11/19 Revise signs
V7	01/02 Revise signs
V8	02/20 Revise all concepts & signs
V9	02/24 Revise signs
V10	03/19 Add signs, revise narrative
V11	05/19 Add/revise signs, revise all B3
V12	05/22 Revise B3 & directional signs
V13	06/02 Revise B1 canopy details
V14	08/05 Revise per city comments
V15	

PAGE SCALE
1 1/2" = 1'-0"

PAGE #
31

B1-S01 - ATTACHMENT DETAILS

Glass to be installed AFTER knife plates: openings cut into glass to accomodate knife plates.

CANOPY 29A PLAN VIEW

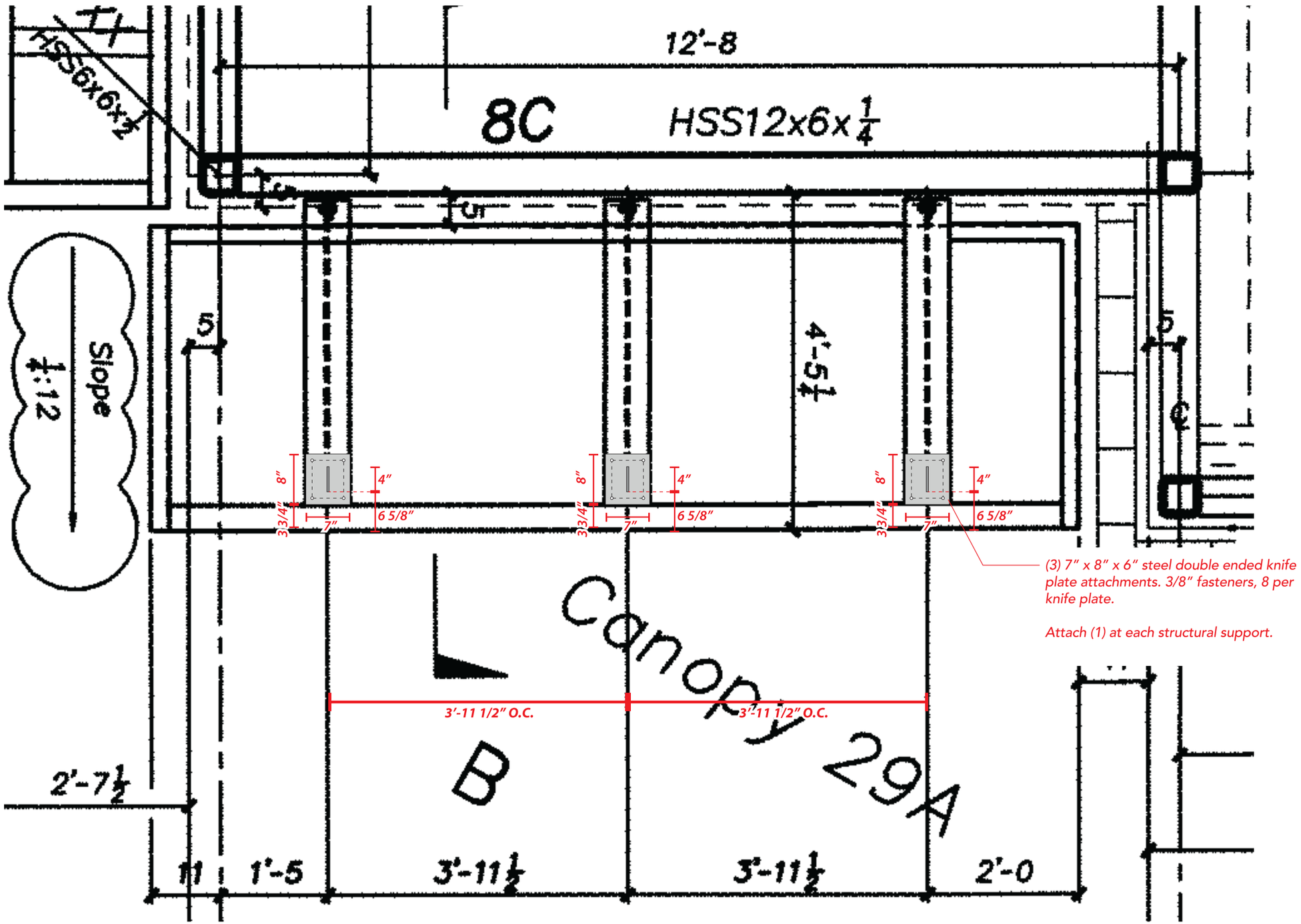

A DESIGN STUDIO

MAIN CONTACT
Gracia Mueller
360.929.3077

CREATIVE
Brody Lund
425.359.7380

Additional information:
adesignstudioseattle.com

Follow us on social:
@adesignstudioseattle

COPYRIGHT
All artwork contained herein is the copyrighted property of A Design Studio Seattle. This includes, but is not limited to, logos, specifications, artwork and engineering. Any usage beyond internal reviews shall require our appoval and a separate design fee paid to A Design Studio Seattle. Usage rights can also be purchased (limited or complete) for an additional fee. Any unlawful distribution of said artwork is a violation of federal copyright laws.

PROJECT NAME
Terrace Station

PROJECT #
20-004

ADDRESS
24000 Van Ry Blvd
Mountlake Terrace, WA 98043

DATE
08/05/20

VERSION NOTES

V1	07/14 Concept design
V2	07/31 Revise signs
V3	08/06 Revise signs
V4	08/22 Revise signs
V5	10/02 Revise signs
V6	11/19 Revise signs
V7	01/02 Revise signs
V8	02/20 Revise all concepts & signs
V9	02/24 Revise signs
V10	03/19 Add signs, revise narrative
V11	05/19 Add/revise signs, revise all B3
V12	05/22 Revise B3 & directional signs
V13	06/02 Revise B1 canopy details
V14	08/05 Revise per city comments
V15	

PAGE SCALE
3/4" = 1'-0"

PAGE #
32

B1-S01 - ATTACHMENT DETAILS

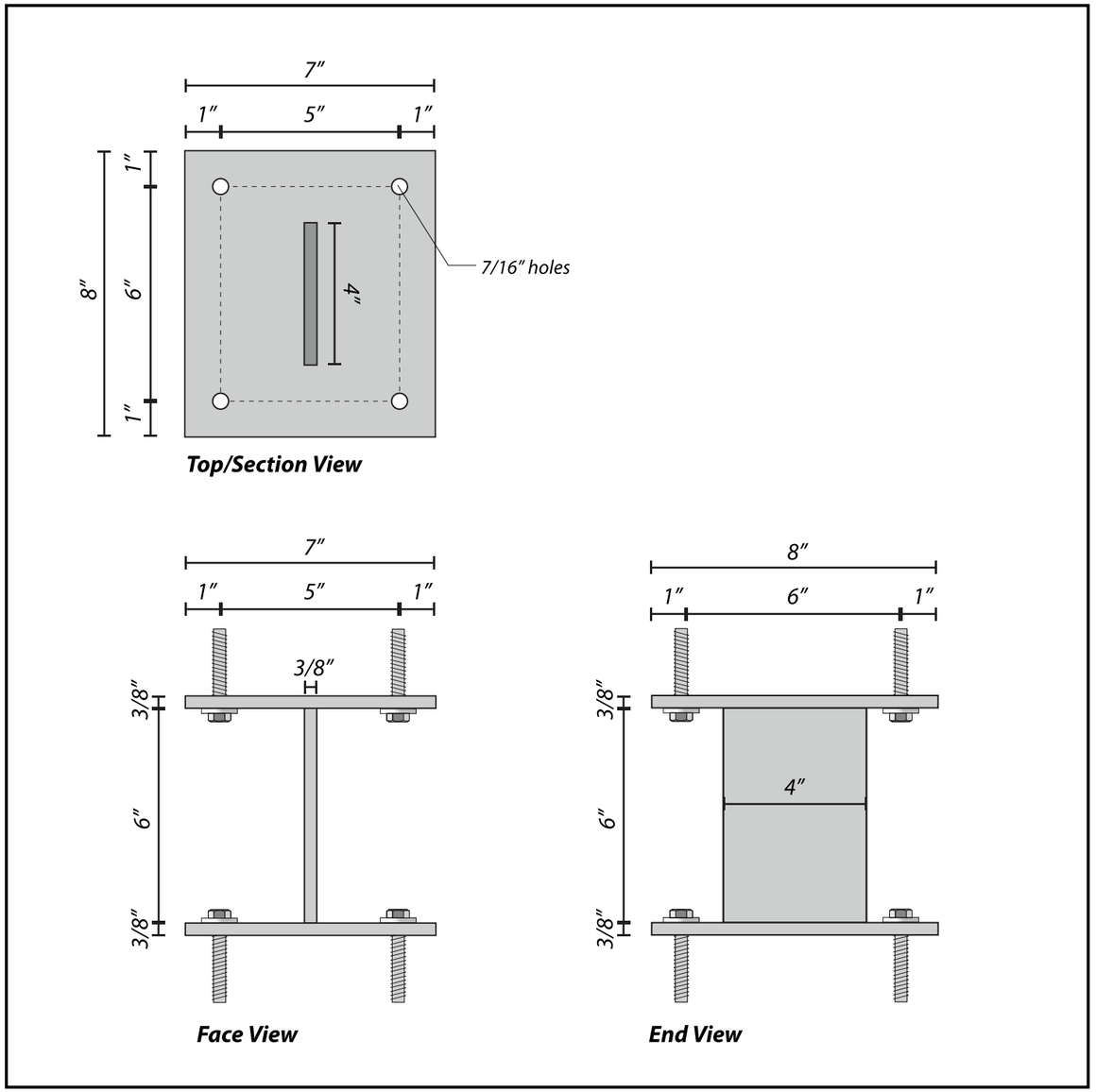

3/8″ x 7″ x 8″ Steel Double Ended Knife Plate Detail

Scale: 3″=1'-0″

A DESIGN STUDIO

MAIN CONTACT
Gracia Mueller
360.929.3077

CREATIVE
Brody Lund
425.359.7380

Additional information:
adesignstudioseattle.com

Follow us on social:
@adesignstudioseattle

COPYRIGHT
All artwork contained herein is the copyrighted property of A Design Studio Seattle. This includes, but is not limited to, logos, specifications, artwork and engineering. Any usage beyond internal reviews shall require our appoval and a separate design fee paid to A Design Studio Seattle. Usage rights can also be purchased (limited or complete) for an additional fee. Any unlawful distribution of said artwork is a violation of federal copyright laws.

PROJECT NAME
Terrace Station

PROJECT #
20-004

ADDRESS
24000 Van Ry Blvd
Mountlake Terrace, WA 98043

DATE
08/05/20

VERSION NOTES

V1	07/14 Concept design
V2	07/31 Revise signs
V3	08/06 Revise signs
V4	08/22 Revise signs
V5	10/02 Revise signs
V6	11/19 Revise signs
V7	01/02 Revise signs
V8	02/20 Revise all concepts & signs
V9	02/24 Revise signs
V10	03/19 Add signs, revise narrative
V11	05/19 Add/revise signs, revise all B3
V12	05/22 Revise B3 & directional signs
V13	06/02 Revise B1 canopy details
V14	08/05 Revise per city comments
V15	

PAGE SCALE
As Noted

PAGE #
33

B1-S02 - ELEVATIONS

Sign Area: 41.9 Square Feet

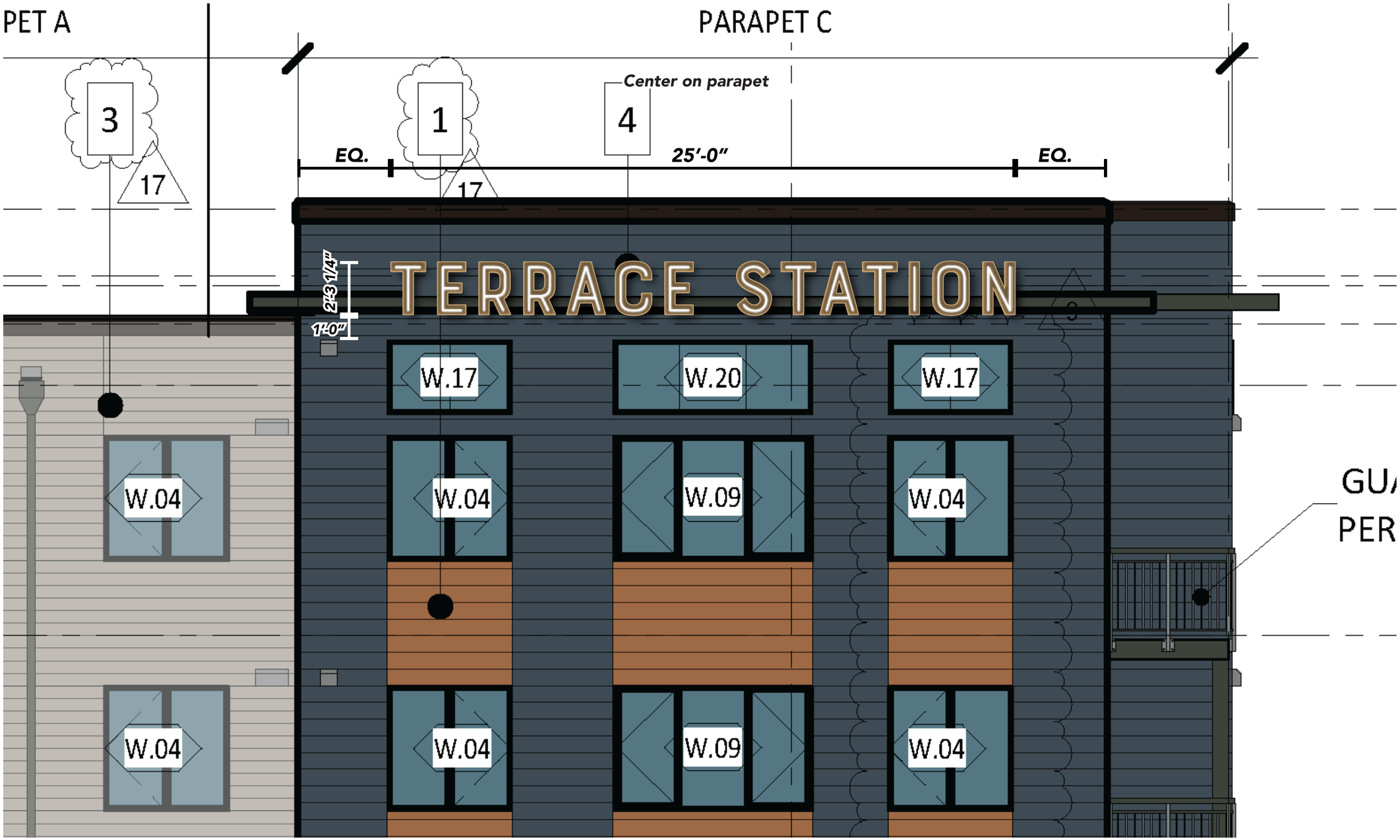

B1 West Elevation

A DESIGN STUDIO

MAIN CONTACT
Gracia Mueller
360.929.3077

CREATIVE
Brody Lund
425.359.7380

Additional information:
adesignstudioseattle.com

Follow us on social:
@adesignstudioseattle

COPYRIGHT
All artwork contained herein is the copyrighted property of A Design Studio Seattle. This includes, but is not limited to, logos, specifications, artwork and engineering. Any usage beyond internal reviews shall require our appoval and a separate design fee paid to A Design Studio Seattle. Usage rights can also be purchased (limited or complete) for an additional fee. Any unlawful distribution of said artwork is a violation of federal copyright laws.

PROJECT NAME
Terrace Station

PROJECT #
20-004

ADDRESS
24000 Van Ry Blvd
Mountlake Terrace, WA 98043

DATE
08/05/20

VERSION NOTES

V1	07/14 Concept design
V2	07/31 Revise signs
V3	08/06 Revise signs
V4	08/22 Revise signs
V5	10/02 Revise signs
V6	11/19 Revise signs
V7	01/02 Revise signs
V8	02/20 Revise all concepts & signs
V9	02/24 Revise signs
V10	03/19 Add signs, revise narrative
V11	05/19 Add/revise signs, revise all B3
V12	05/22 Revise B3 & directional signs
V13	06/02 Revise B1 canopy details
V14	08/05 Revise per city comments
V15	

PAGE SCALE
1/4" = 1'-0"

PAGE #

B1-S02 - DETAILS

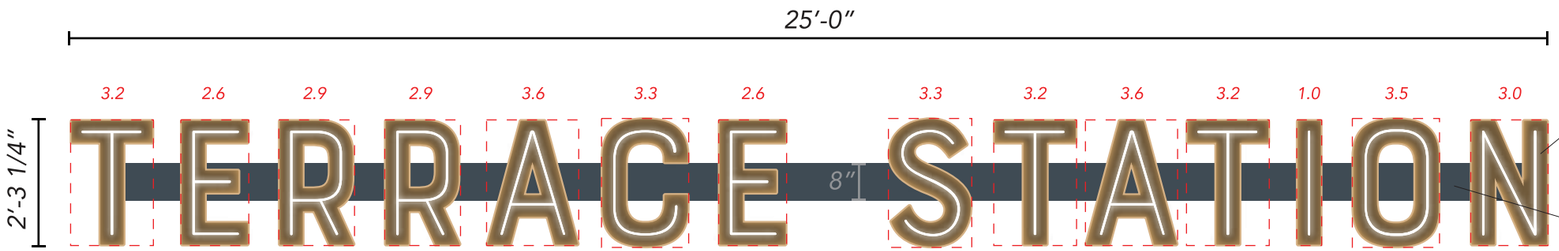

Face View

5″ Alum. open pan channel letters. Paint faces and returns gold. 15mm white single tube neon.

8″ x 8″ alum. electrical raceway. Paint to match building, satin finish. Mount to top of sun shade.

Drill & Tap 3/8″ bolts. 2 places minimum every 4′-0″.

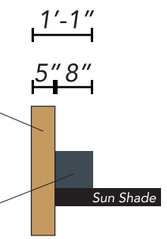

End View

Sign B1-S02: *Manufacture & install (1) single face illuminated parapet sign with neon open pan channel lettering.*

Sign Area: 41.9 Square Feet

CLIENT TO PROVIDE
20 AMP / 120 VOLT
DEDICATED SIGN CIRCUIT WITHIN
6 FT OF SIGN LOCATION

Sign B1-S02 Retail Signage Design Options

A DESIGN STUDIO

MAIN CONTACT
Gracia Mueller
360.929.3077

CREATIVE
Brody Lund
425.359.7380

Additional information:
adesignstudioseattle.com

Follow us on social:
@adesignstudioseattle

COPYRIGHT
All artwork contained herein is the copyrighted property of A Design Studio Seattle. This includes, but is not limited to, logos, specifications, artwork and engineering. Any usage beyond internal reviews shall require our appoval and a separate design fee paid to A Design Studio Seattle. Usage rights can also be purchased (limited or complete) for an additional fee. Any unlawful distribution of said artwork is a violation of federal copyright laws.

PROJECT NAME
Terrace Station

PROJECT #
20-004

ADDRESS
24000 Van Ry Blvd
Mountlake Terrace, WA 98043

DATE
08/05/20

VERSION NOTES

V1	07/14 Concept design
V2	07/31 Revise signs
V3	08/06 Revise signs
V4	08/22 Revise signs
V5	10/02 Revise signs
V6	11/19 Revise signs
V7	01/02 Revise signs
V8	02/20 Revise all concepts & signs
V9	02/24 Revise signs
V10	03/19 Add signs, revise narrative
V11	05/19 Add/revise signs, revise all B3
V12	05/22 Revise B3 & directional signs
V13	06/02 Revise B1 canopy details
V14	08/05 Revise per city comments
V15	

PAGE SCALE
3/8″ = 1′-0″

PAGE #

B1-S02 - ATTACHMENT DETAILS

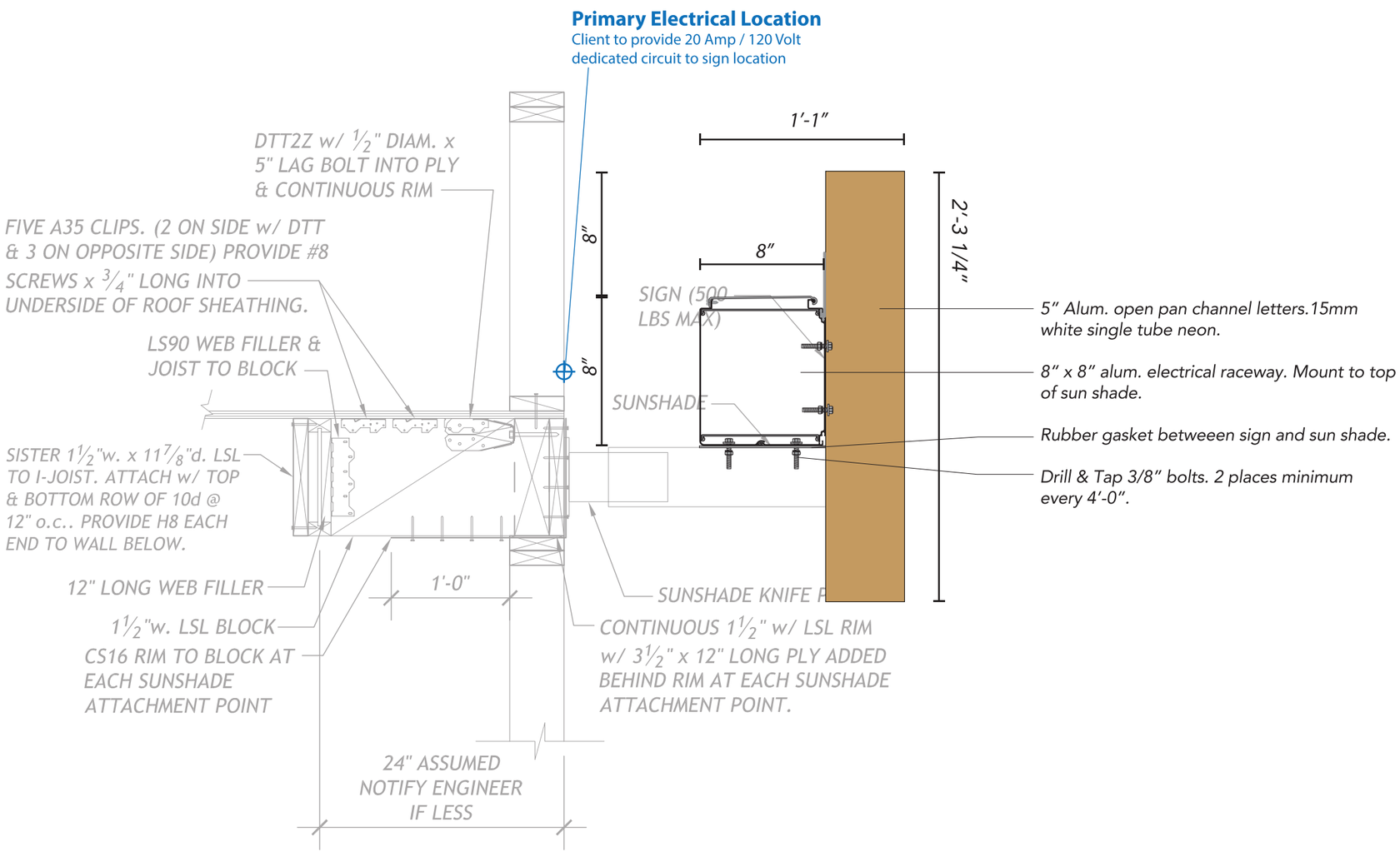

SECTION at SUNSHADE KNIFE PLATE

18 SECTION at ROOF SUNSHADE & SIGN

A DESIGN STUDIO

MAIN CONTACT
Gracia Mueller
360.929.3077

CREATIVE
Brody Lund
425.359.7380

Additional information:
adesignstudioseattle.com

Follow us on social:
@adesignstudioseattle

COPYRIGHT
All artwork contained herein is the copyrighted property of A Design Studio Seattle. This includes, but is not limited to, logos, specifications, artwork and engineering. Any usage beyond internal reviews shall require our appoval and a separate design fee paid to A Design Studio Seattle. Usage rights can also be purchased (limited or complete) for an additional fee. Any unlawful distribution of said artwork is a violation of federal copyright laws.

PROJECT NAME
Terrace Station

PROJECT #
20-004

ADDRESS
24000 Van Ry Blvd
Mountlake Terrace, WA 98043

DATE
08/05/20

VERSION NOTES

V1	07/14 Concept design
V2	07/31 Revise signs
V3	08/06 Revise signs
V4	08/22 Revise signs
V5	10/02 Revise signs
V6	11/19 Revise signs
V7	01/02 Revise signs
V8	02/20 Revise all concepts & signs
V9	02/24 Revise signs
V10	03/19 Add signs, revise narrative
V11	05/19 Add/revise signs, revise all B3
V12	05/22 Revise B3 & directional signs
V13	06/02 Revise B1 canopy details
V14	08/05 Revise per city comments
V15	

PAGE SCALE
1 1/2" = 1'-0"

PAGE #
36

B1-S03 - ELEVATIONS

Sign Area: 41.9 Square Feet

B1 North Elevation

A DESIGN STUDIO

MAIN CONTACT
Gracia Mueller
360.929.3077

CREATIVE
Brody Lund
425.359.7380

Additional information:
adesignstudioseattle.com

Follow us on social:
@adesignstudioseattle

COPYRIGHT
All artwork contained herein is the copyrighted property of A Design Studio Seattle. This includes, but is not limited to, logos, specifications, artwork and engineering. Any usage beyond internal reviews shall require our appoval and a separate design fee paid to A Design Studio Seattle. Usage rights can also be purchased (limited or complete) for an additional fee. Any unlawful distribution of said artwork is a violation of federal copyright laws.

PROJECT NAME
Terrace Station

PROJECT #
20-004

ADDRESS
24000 Van Ry Blvd
Mountlake Terrace, WA 98043

DATE
08/05/20

VERSION NOTES

V1	07/14 Concept design
V2	07/31 Revise signs
V3	08/06 Revise signs
V4	08/22 Revise signs
V5	10/02 Revise signs
V6	11/19 Revise signs
V7	01/02 Revise signs
V8	02/20 Revise all concepts & signs
V9	02/24 Revise signs
V10	03/19 Add signs, revise narrative
V11	05/19 Add/revise signs, revise all B3
V12	05/22 Revise B3 & directional signs
V13	06/02 Revise B1 canopy details
V14	08/05 Revise per city comments
V15	

PAGE SCALE
1/4" = 1'-0"

PAGE #

B1-S03 - DETAILS

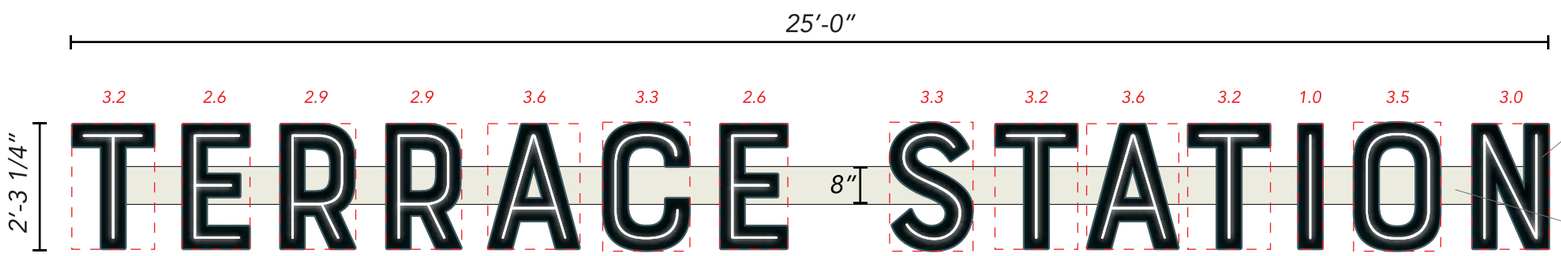

Face View

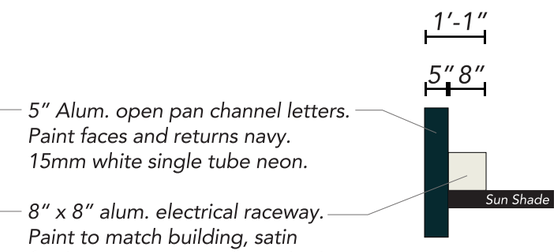

End View

5″ Alum. open pan channel letters. Paint faces and returns navy. 15mm white single tube neon.

8″ x 8″ alum. electrical raceway. Paint to match building, satin finish. Mount to top of sun shade.

Drill & Tap 3/8″ x 4″ bolts. 2 places minimum every 4′-0″.

Sign B1-S03: *Manufacture & install (1) single face illuminated parapet sign with neon open pan channel lettering.*

Sign Area: 41.9 Square Feet

CLIENT TO PROVIDE 20 AMP / 120 VOLT DEDICATED SIGN CIRCUIT WITHIN 6 FT OF SIGN LOCATION

A DESIGN STUDIO

MAIN CONTACT
Gracia Mueller
360.929.3077

CREATIVE
Brody Lund
425.359.7380

Additional information:
adesignstudioseattle.com

Follow us on social:
@adesignstudioseattle

COPYRIGHT
All artwork contained herein is the copyrighted property of A Design Studio Seattle. This includes, but is not limited to, logos, specifications, artwork and engineering. Any usage beyond internal reviews shall require our appoval and a separate design fee paid to A Design Studio Seattle. Usage rights can also be purchased (limited or complete) for an additional fee. Any unlawful distribution of said artwork is a violation of federal copyright laws.

PROJECT NAME
Terrace Station

PROJECT #
20-004

ADDRESS
24000 Van Ry Blvd
Mountlake Terrace, WA 98043

DATE
08/05/20

VERSION NOTES

V1	07/14 Concept design
V2	07/31 Revise signs
V3	08/06 Revise signs
V4	08/22 Revise signs
V5	10/02 Revise signs
V6	11/19 Revise signs
V7	01/02 Revise signs
V8	02/20 Revise all concepts & signs
V9	02/24 Revise signs
V10	03/19 Add signs, revise narrative
V11	05/19 Add/revise signs, revise all B3
V12	05/22 Revise B3 & directional signs
V13	06/02 Revise B1 canopy details
V14	08/05 Revise per city comments
V15	

PAGE SCALE
3/8″ = 1′-0″

PAGE #
38

B1-S03 - ATTACHMENT DETAILS

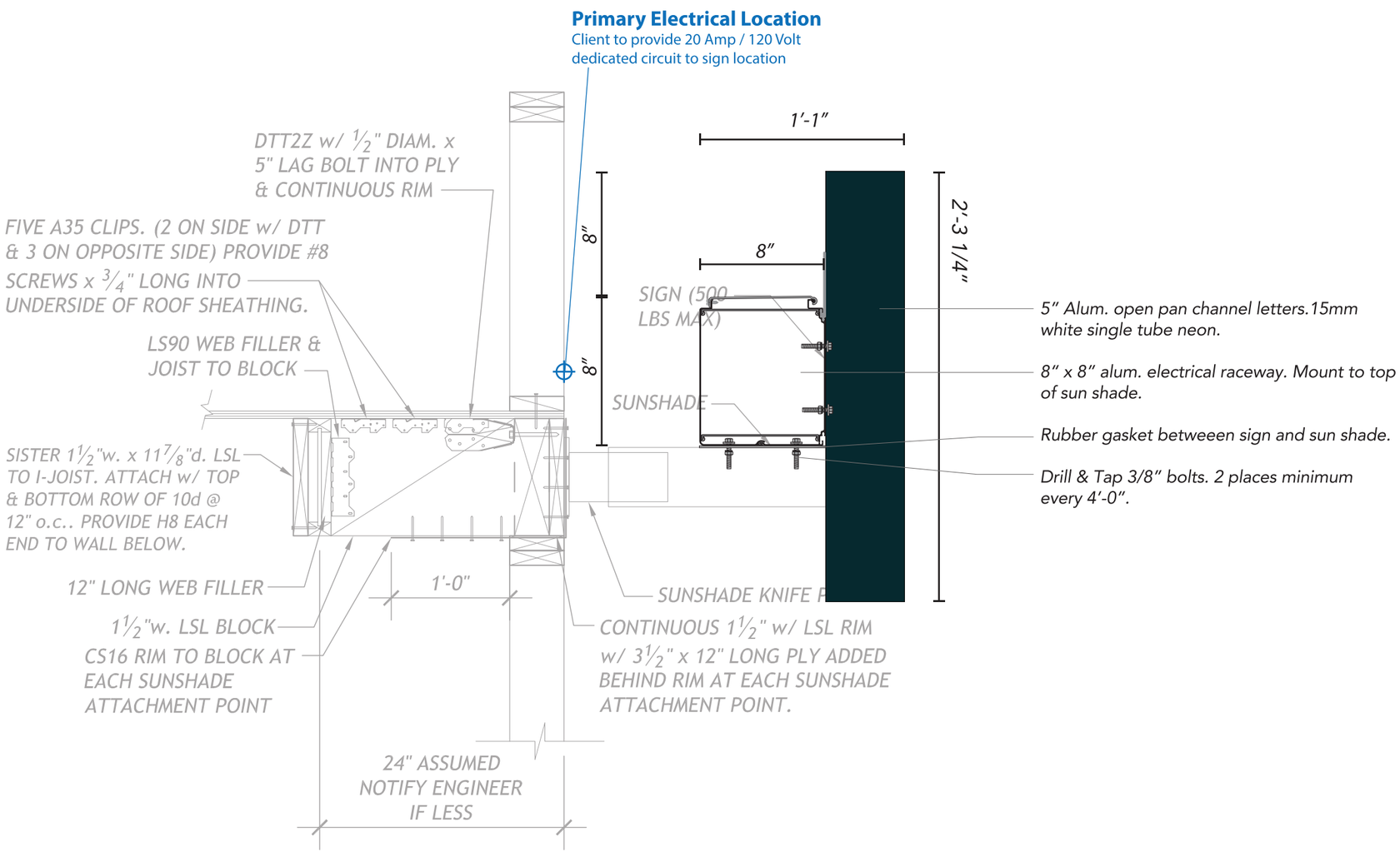

SECTION at SUNSHADE KNIFE PLATE

18

SECTION at ROOF SUNSHADE & SIGN

A DESIGN STUDIO

MAIN CONTACT
Gracia Mueller
360.929.3077

CREATIVE
Brody Lund
425.359.7380

Additional information:
adesignstudioseattle.com

Follow us on social:
@adesignstudioseattle

COPYRIGHT
All artwork contained herein is the copyrighted property of A Design Studio Seattle. This includes, but is not limited to, logos, specifications, artwork and engineering. Any usage beyond internal reviews shall require our appoval and a separate design fee paid to A Design Studio Seattle. Usage rights can also be purchased (limited or complete) for an additional fee. Any unlawful distribution of said artwork is a violation of federal copyright laws.

PROJECT NAME
Terrace Station

PROJECT #
20-004

ADDRESS
24000 Van Ry Blvd
Mountlake Terrace, WA 98043

DATE
08/05/20

VERSION NOTES

V1	07/14 Concept design
V2	07/31 Revise signs
V3	08/06 Revise signs
V4	08/22 Revise signs
V5	10/02 Revise signs
V6	11/19 Revise signs
V7	01/02 Revise signs
V8	02/20 Revise all concepts & signs
V9	02/24 Revise signs
V10	03/19 Add signs, revise narrative
V11	05/19 Add/revise signs, revise all B3
V12	05/22 Revise B3 & directional signs
V13	06/02 Revise B1 canopy details
V14	08/05 Revise per city comments
V15	

PAGE SCALE
1 1/2" = 1'-0"

PAGE #
39

B1-S05 - ELEVATIONS

Sign Area: 115.2 Square Feet

Center between wall edge and windows

B1 West Elevation

A DESIGN STUDIO

MAIN CONTACT
Gracia Mueller
360.929.3077

CREATIVE
Brody Lund
425.359.7380

Additional information:
adesignstudioseattle.com

Follow us on social:
@adesignstudioseattle

COPYRIGHT
All artwork contained herein is the copyrighted property of A Design Studio Seattle. This includes, but is not limited to, logos, specifications, artwork and engineering. Any usage beyond internal reviews shall require our appoval and a separate design fee paid to A Design Studio Seattle. Usage rights can also be purchased (limited or complete) for an additional fee. Any unlawful distribution of said artwork is a violation of federal copyright laws.

PROJECT NAME
Terrace Station

PROJECT #
20-004

ADDRESS
24000 Van Ry Blvd
Mountlake Terrace, WA 98043

DATE
08/05/20

VERSION NOTES

V1	07/14 Concept design
V2	07/31 Revise signs
V3	08/06 Revise signs
V4	08/22 Revise signs
V5	10/02 Revise signs
V6	11/19 Revise signs
V7	01/02 Revise signs
V8	02/20 Revise all concepts & signs
V9	02/24 Revise signs
V10	03/19 Add signs, revise narrative
V11	05/19 Add/revise signs, revise all B3
V12	05/22 Revise B3 & directional signs
V13	06/02 Revise B1 canopy details
V14	08/05 Revise per city comments
V15	

PAGE SCALE
1/4" = 1'-0"

PAGE #

B1-S06 - ELEVATIONS

Sign Area: 115.2 Square Feet

B1 North Elevation

A DESIGN STUDIO

MAIN CONTACT
Gracia Mueller
360.929.3077

CREATIVE
Brody Lund
425.359.7380

Additional information:
adesignstudioseattle.com

Follow us on social:
@adesignstudioseattle

COPYRIGHT
All artwork contained herein is the copyrighted property of A Design Studio Seattle. This includes, but is not limited to, logos, specifications, artwork and engineering. Any usage beyond internal reviews shall require our appoval and a separate design fee paid to A Design Studio Seattle. Usage rights can also be purchased (limited or complete) for an additional fee. Any unlawful distribution of said artwork is a violation of federal copyright laws.

PROJECT NAME
Terrace Station

PROJECT #
20-004

ADDRESS
24000 Van Ry Blvd
Mountlake Terrace, WA 98043

DATE
08/05/20

VERSION NOTES

V1	07/14 Concept design
V2	07/31 Revise signs
V3	08/06 Revise signs
V4	08/22 Revise signs
V5	10/02 Revise signs
V6	11/19 Revise signs
V7	01/02 Revise signs
V8	02/20 Revise all concepts & signs
V9	02/24 Revise signs
V10	03/19 Add signs, revise narrative
V11	05/19 Add/revise signs, revise all B3
V12	05/22 Revise B3 & directional signs
V13	06/02 Revise B1 canopy details
V14	08/05 Revise per city comments
V15	

PAGE SCALE
1/4" = 1'-0"

PAGE #
41

B1-S05 & B1-S06 - DETAILS

Sign Area: 115.2 Square Feet

Signs B1-S05 & B1-S06: *Manufacture & install (2) single face non-illuminated temporary banners.*

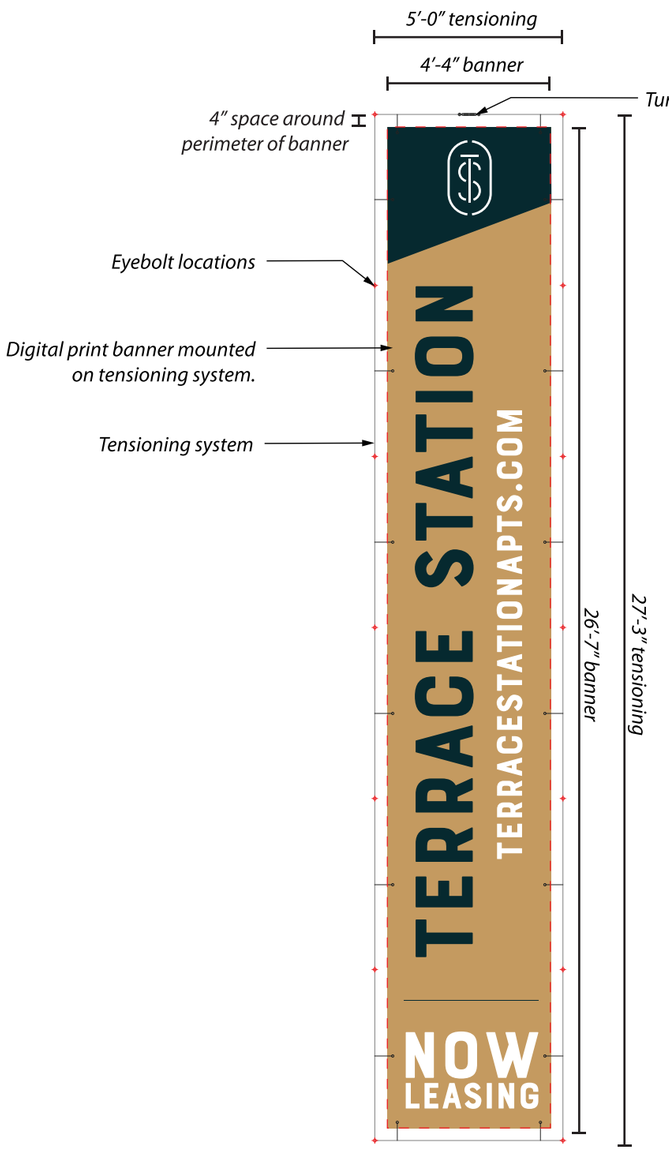

Front View

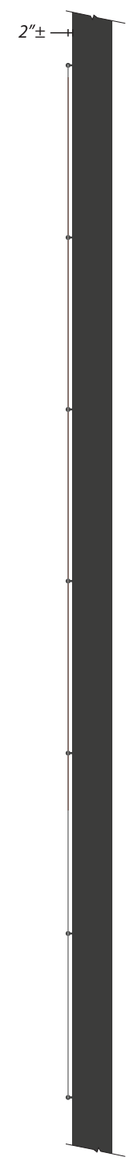

End View

Banner Installation
Required Materials:
- *Eye Bolts*
- *Tenson Cable*
- *Turnbuckle*

Eye Bolts To Be Provided By Others.

Banners Attach to Cable Tension System With Quick Lock Fasteners.

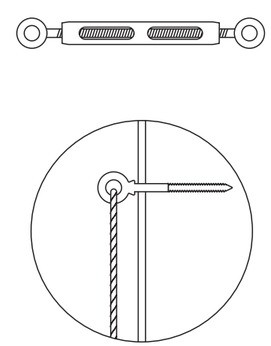

Tensioning System Components

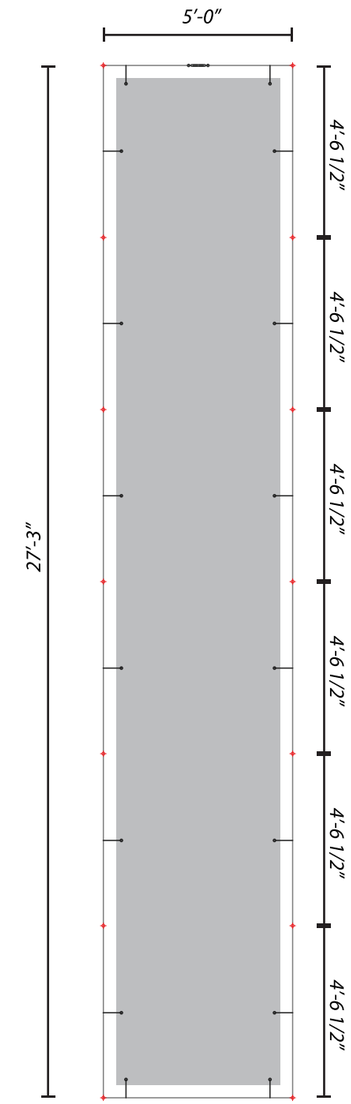

Eyebolt Locations

A DESIGN STUDIO

MAIN CONTACT
Gracia Mueller
360.929.3077

CREATIVE
Brody Lund
425.359.7380

Additional information:
adesignstudioseattle.com

Follow us on social:
@adesignstudioseattle

COPYRIGHT
All artwork contained herein is the copyrighted property of A Design Studio Seattle. This includes, but is not limited to, logos, specifications, artwork and engineering. Any usage beyond internal reviews shall require our appoval and a separate design fee paid to A Design Studio Seattle. Usage rights can also be purchased (limited or complete) for an additional fee. Any unlawful distribution of said artwork is a violation of federal copyright laws.

PROJECT NAME
Terrace Station

PROJECT #
20-004

ADDRESS
24000 Van Ry Blvd
Mountlake Terrace, WA 98043

DATE
08/05/20

VERSION NOTES

V1	07/14 Concept design
V2	07/31 Revise signs
V3	08/06 Revise signs
V4	08/22 Revise signs
V5	10/02 Revise signs
V6	11/19 Revise signs
V7	01/02 Revise signs
V8	02/20 Revise all concepts & signs
V9	02/24 Revise signs
V10	03/19 Add signs, revise narrative
V11	05/19 Add/revise signs, revise all B3
V12	05/22 Revise B3 & directional signs
V13	06/02 Revise B1 canopy details
V14	08/05 Revise per city comments
V15	

PAGE SCALE
1/4" = 1'-0"

PAGE #
42

B1-S05 & B1-S06 - ATTACHMENT DETAILS

NOTES:
1. FRAMING PER ARCH
2. ALIGN FASTENERS w/ BATTENS & STUDS

EXTERIOR

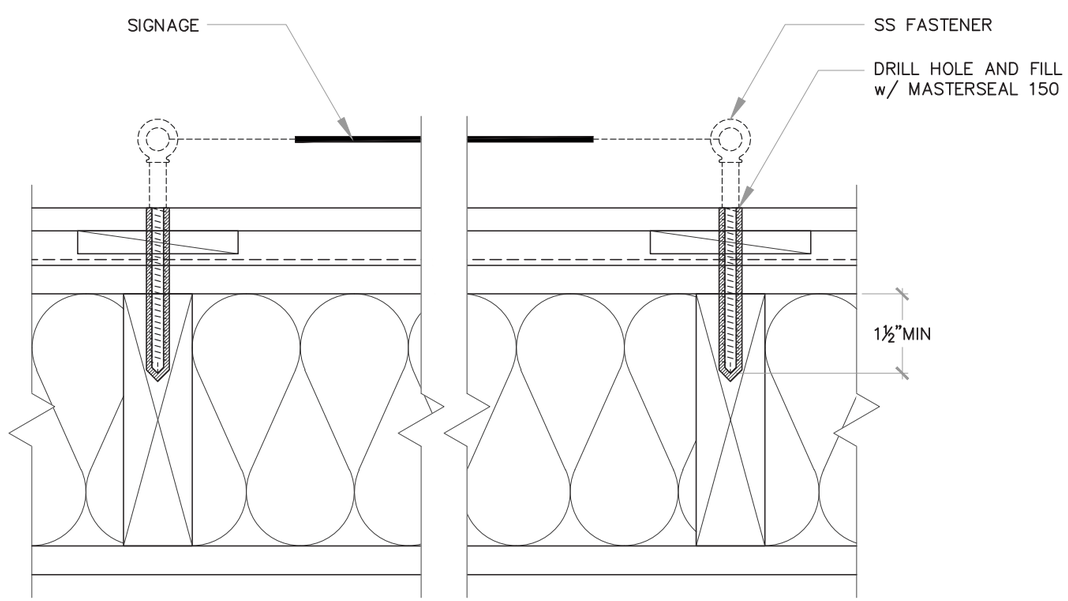

INTERIOR

229 (TYPICAL) PLAN: TEMPORARY SIGNAGE ATTACHMENT

SCALE: NTS

A DESIGN STUDIO

MAIN CONTACT
Gracia Mueller
360.929.3077

CREATIVE
Brody Lund
425.359.7380

Additional information:
adesignstudioseattle.com

Follow us on social:
@adesignstudioseattle

COPYRIGHT
All artwork contained herein is the copyrighted property of A Design Studio Seattle. This includes, but is not limited to, logos, specifications, artwork and engineering. Any usage beyond internal reviews shall require our appoval and a separate design fee paid to A Design Studio Seattle. Usage rights can also be purchased (limited or complete) for an additional fee. Any unlawful distribution of said artwork is a violation of federal copyright laws.

PROJECT NAME
Terrace Station

PROJECT #
20-004

ADDRESS
24000 Van Ry Blvd
Mountlake Terrace, WA 98043

DATE
08/05/20

VERSION NOTES

V1	07/14 Concept design
V2	07/31 Revise signs
V3	08/06 Revise signs
V4	08/22 Revise signs
V5	10/02 Revise signs
V6	11/19 Revise signs
V7	01/02 Revise signs
V8	02/20 Revise all concepts & signs
V9	02/24 Revise signs
V10	03/19 Add signs, revise narrative
V11	05/19 Add/revise signs, revise all B3
V12	05/22 Revise B3 & directional signs
V13	06/02 Revise B1 canopy details
V14	08/05 Revise per city comments
V15	

PAGE SCALE
As Noted

PAGE #
43

B1-S07 - ELEVATIONS

Sign Area: 5.3 Square Feet

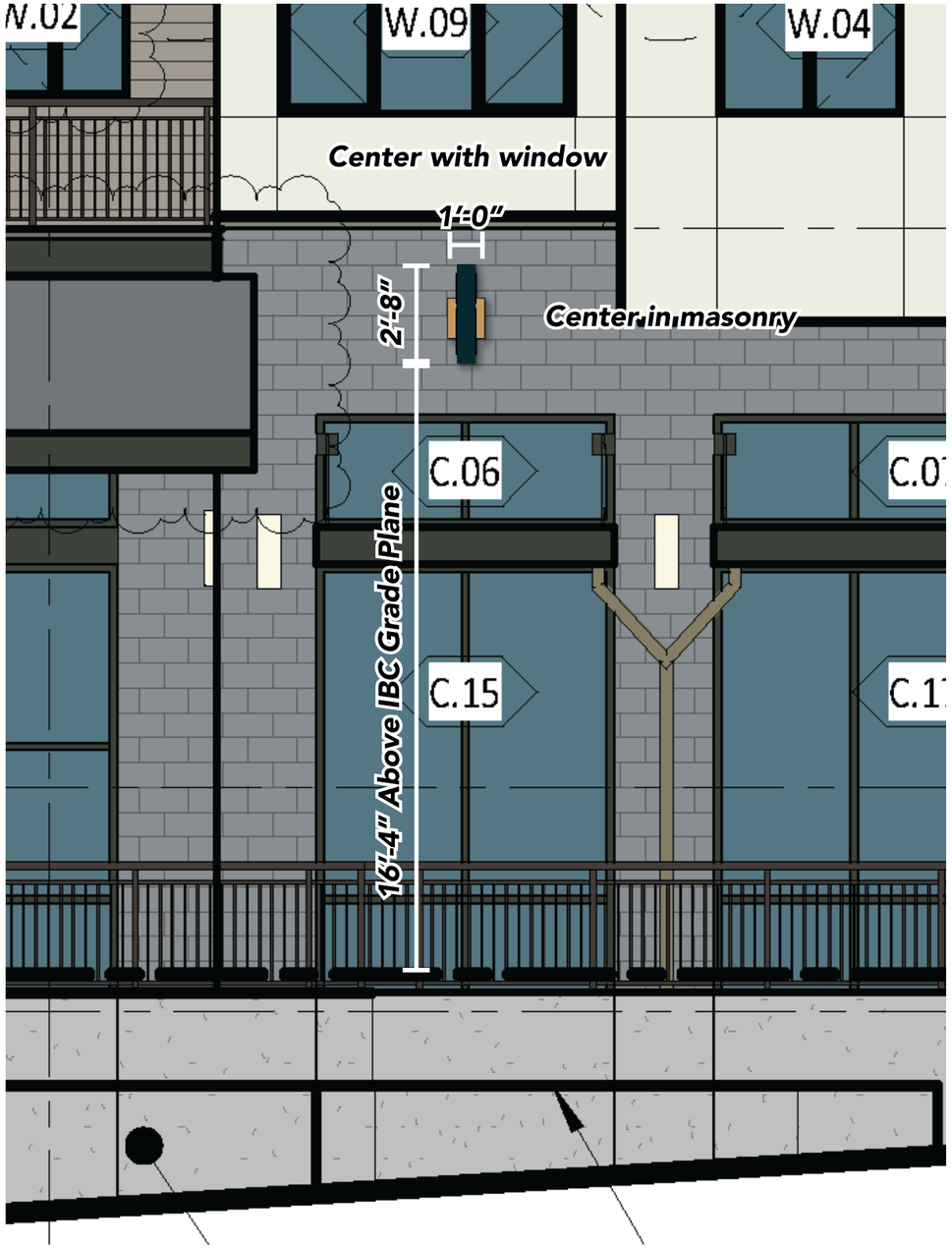

B1 East Elevation

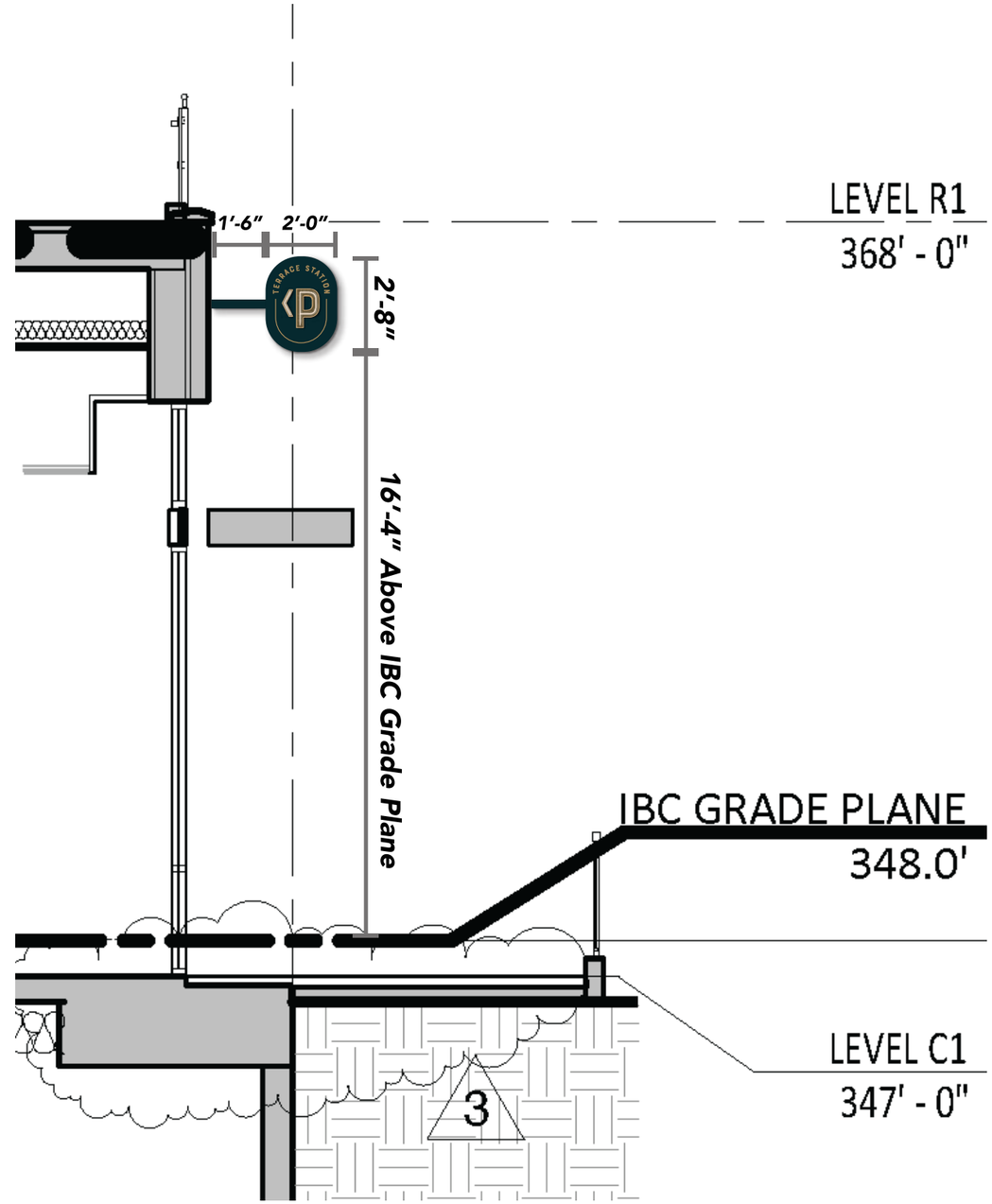

B1 East/West Section 2 Looking North

A DESIGN STUDIO

MAIN CONTACT
Gracia Mueller
360.929.3077

CREATIVE
Brody Lund
425.359.7380

Additional information:
adesignstudioseattle.com

Follow us on social:
@adesignstudioseattle

COPYRIGHT
All artwork contained herein is the copyrighted property of A Design Studio Seattle. This includes, but is not limited to, logos, specifications, artwork and engineering. Any usage beyond internal reviews shall require our appoval and a separate design fee paid to A Design Studio Seattle. Usage rights can also be purchased (limited or complete) for an additional fee. Any unlawful distribution of said artwork is a violation of federal copyright laws.

PROJECT NAME
Terrace Station

PROJECT #
20-004

ADDRESS
24000 Van Ry Blvd
Mountlake Terrace, WA 98043

DATE
08/05/20

VERSION NOTES

V1	07/14 Concept design
V2	07/31 Revise signs
V3	08/06 Revise signs
V4	08/22 Revise signs
V5	10/02 Revise signs
V6	11/19 Revise signs
V7	01/02 Revise signs
V8	02/20 Revise all concepts & signs
V9	02/24 Revise signs
V10	03/19 Add signs, revise narrative
V11	05/19 Add/revise signs, revise all B3
V12	05/22 Revise B3 & directional signs
V13	06/02 Revise B1 canopy details
V14	08/05 Revise per city comments
V15	

PAGE SCALE
1/4" = 1'-0"

PAGE #
44

B1-S08 - ELEVATIONS

Sign Area: 5.3 Square Feet

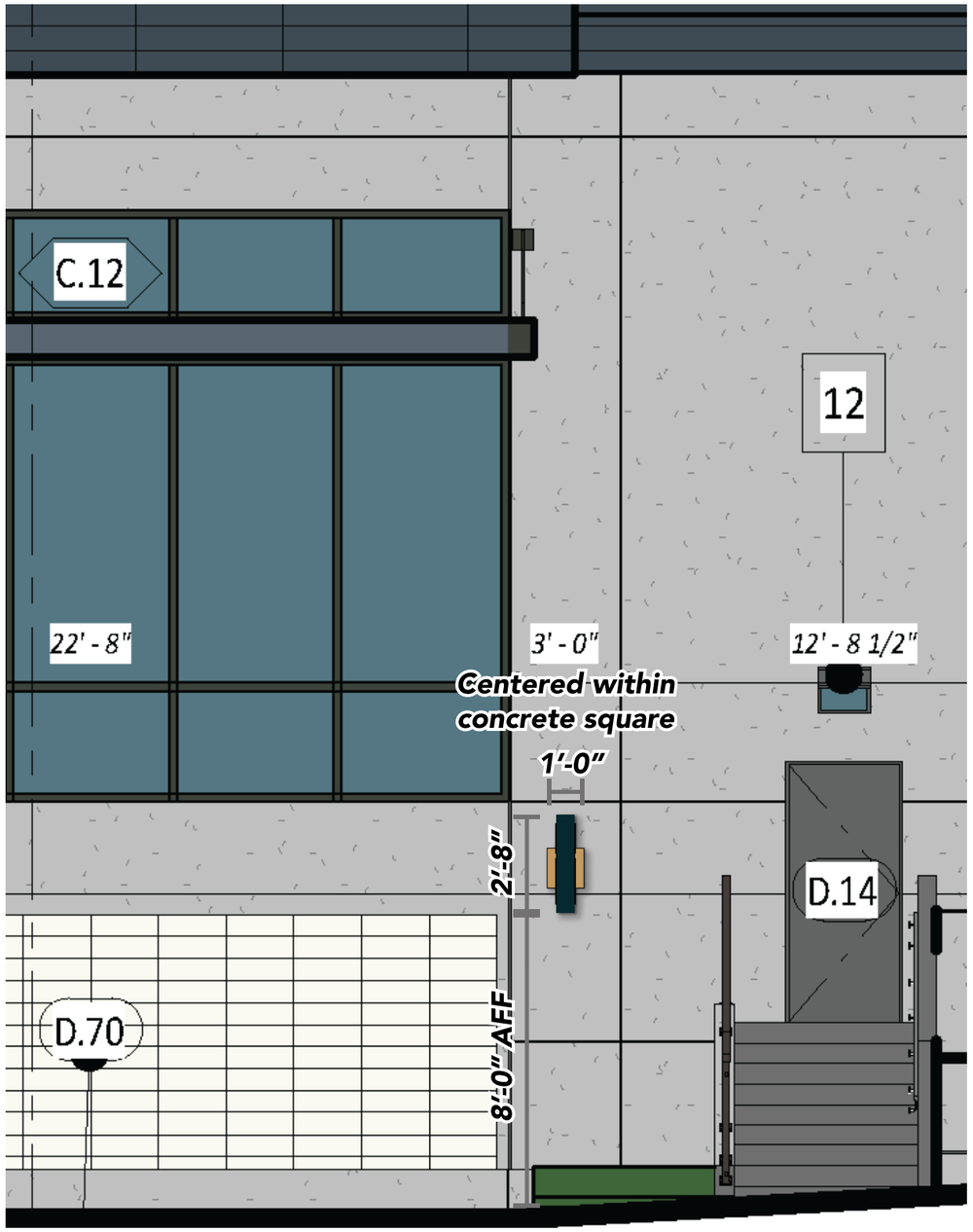

B1 South Elevation

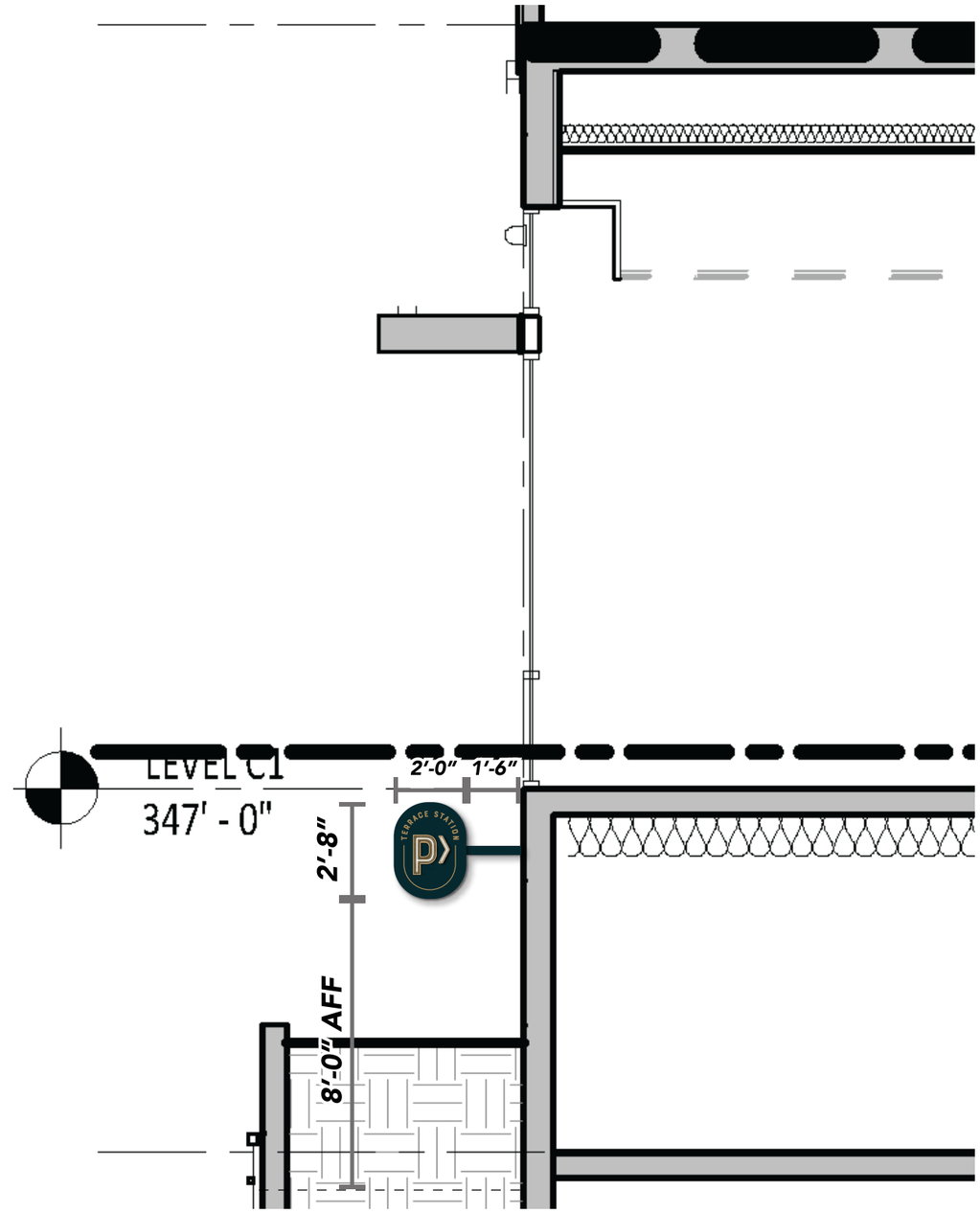

B1 North/South Section Looking West

A DESIGN STUDIO

MAIN CONTACT
Gracia Mueller
360.929.3077

CREATIVE
Brody Lund
425.359.7380

Additional information:
adesignstudioseattle.com

Follow us on social:
@adesignstudioseattle

COPYRIGHT
All artwork contained herein is the copyrighted property of A Design Studio Seattle. This includes, but is not limited to, logos, specifications, artwork and engineering. Any usage beyond internal reviews shall require our appoval and a separate design fee paid to A Design Studio Seattle. Usage rights can also be purchased (limited or complete) for an additional fee. Any unlawful distribution of said artwork is a violation of federal copyright laws.

PROJECT NAME
Terrace Station

PROJECT #
20-004

ADDRESS
24000 Van Ry Blvd
Mountlake Terrace, WA 98043

DATE
08/05/20

VERSION NOTES

V1	07/14 Concept design
V2	07/31 Revise signs
V3	08/06 Revise signs
V4	08/22 Revise signs
V5	10/02 Revise signs
V6	11/19 Revise signs
V7	01/02 Revise signs
V8	02/20 Revise all concepts & signs
V9	02/24 Revise signs
V10	03/19 Add signs, revise narrative
V11	05/19 Add/revise signs, revise all B3
V12	05/22 Revise B3 & directional signs
V13	06/02 Revise B1 canopy details
V14	08/05 Revise per city comments
V15	

PAGE SCALE
1/4" = 1'-0"

PAGE #
45

B1-S09 - ELEVATIONS

Sign Area: 5.3 Square Feet

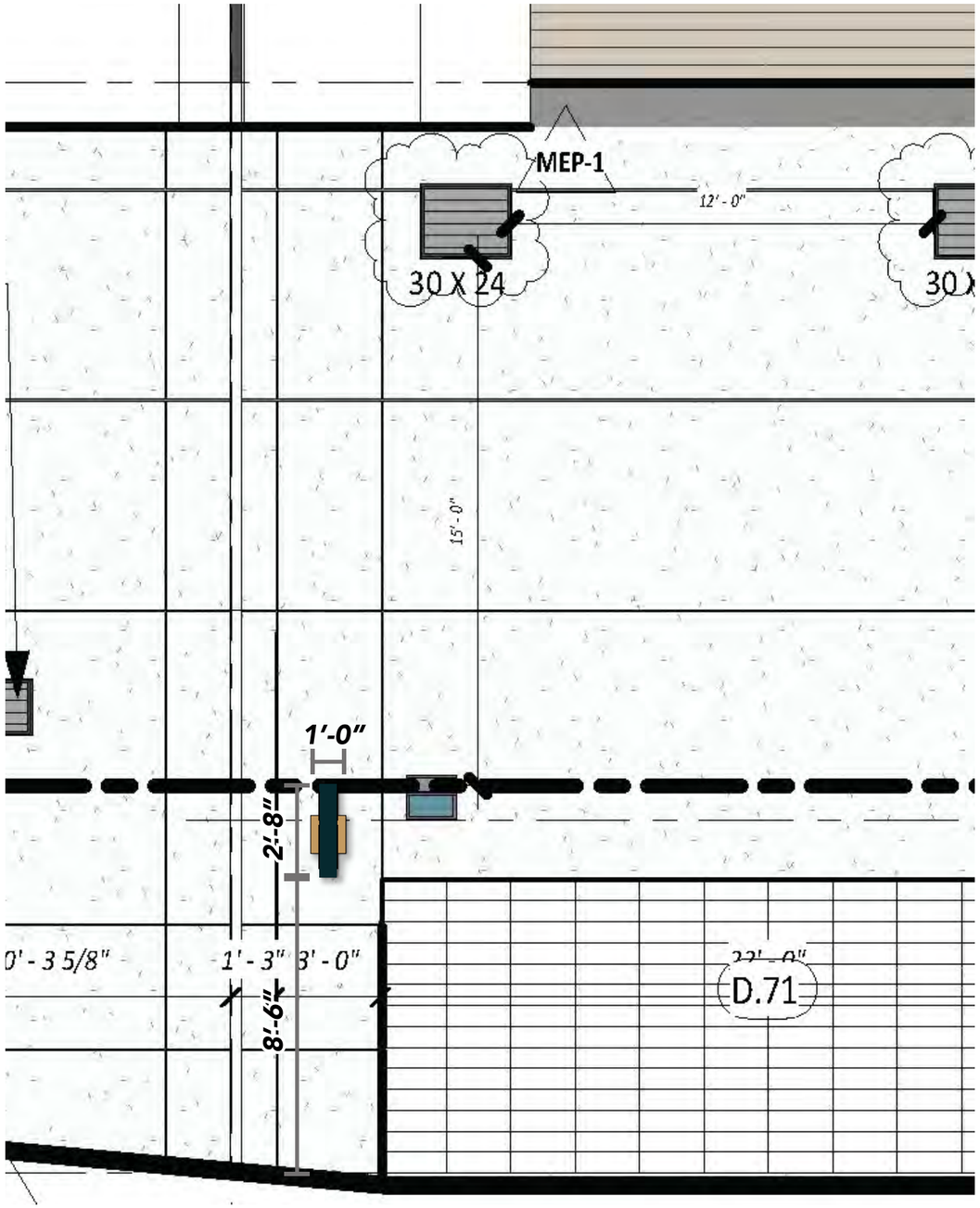

B1 West Elevation

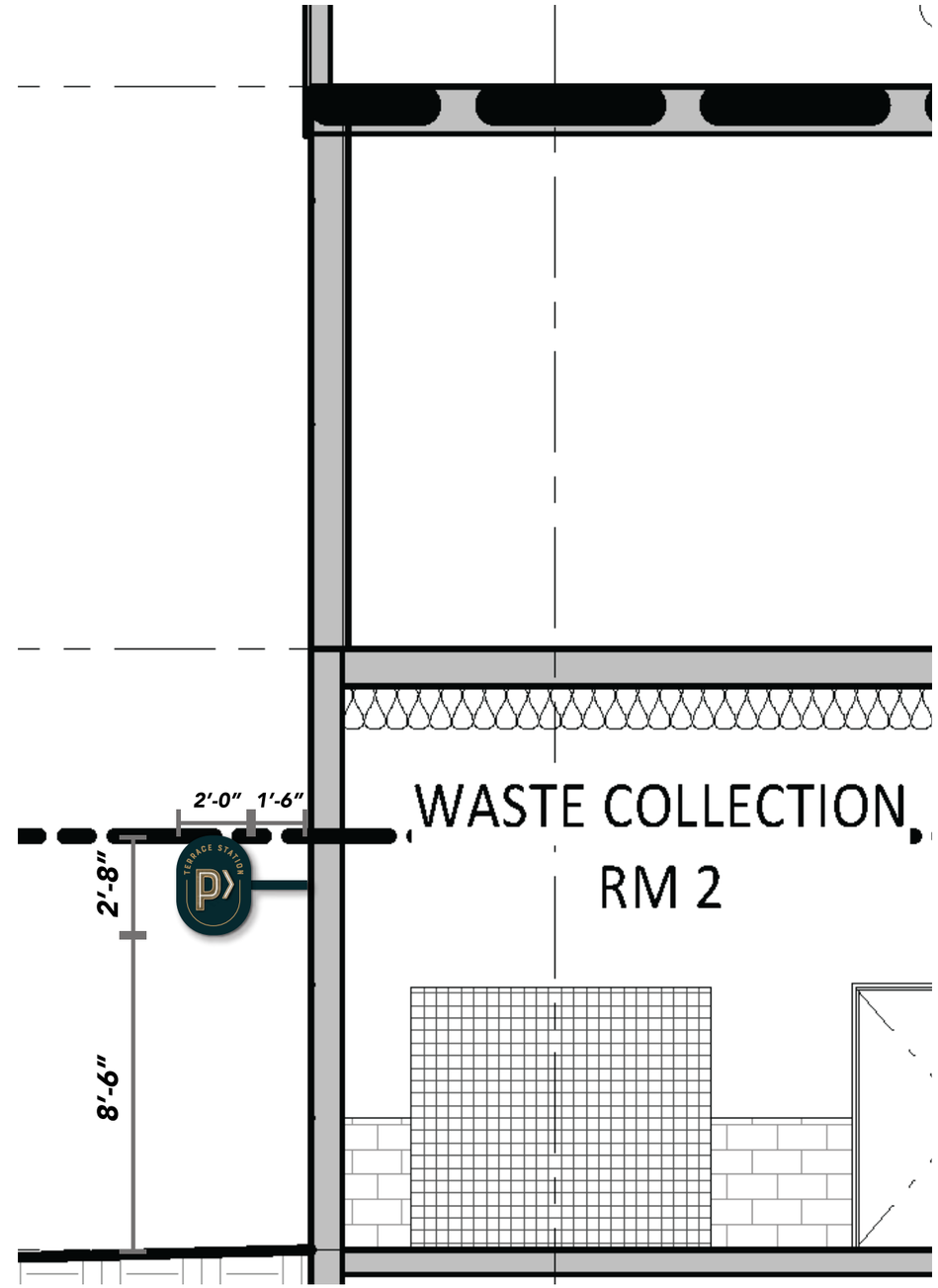

B1 East/West Section 1 Looking North

A DESIGN STUDIO

MAIN CONTACT
Gracia Mueller
360.929.3077

CREATIVE
Brody Lund
425.359.7380

Additional information:
adesignstudioseattle.com

Follow us on social:
@adesignstudioseattle

COPYRIGHT
All artwork contained herein is the copyrighted property of A Design Studio Seattle. This includes, but is not limited to, logos, specifications, artwork and engineering. Any usage beyond internal reviews shall require our appoval and a separate design fee paid to A Design Studio Seattle. Usage rights can also be purchased (limited or complete) for an additional fee. Any unlawful distribution of said artwork is a violation of federal copyright laws.

PROJECT NAME
Terrace Station

PROJECT #
20-004

ADDRESS
24000 Van Ry Blvd
Mountlake Terrace, WA 98043

DATE
08/05/20

VERSION NOTES

V1	07/14 Concept design
V2	07/31 Revise signs
V3	08/06 Revise signs
V4	08/22 Revise signs
V5	10/02 Revise signs
V6	11/19 Revise signs
V7	01/02 Revise signs
V8	02/20 Revise all concepts & signs
V9	02/24 Revise signs
V10	03/19 Add signs, revise narrative
V11	05/19 Add/revise signs, revise all B3
V12	05/22 Revise B3 & directional signs
V13	06/02 Revise B1 canopy details
V14	08/05 Revise per city comments
V15	

PAGE SCALE
1/4" = 1'-0"

PAGE #
46

B1-S07, B1-S08 & B1-S09 - DETAILS

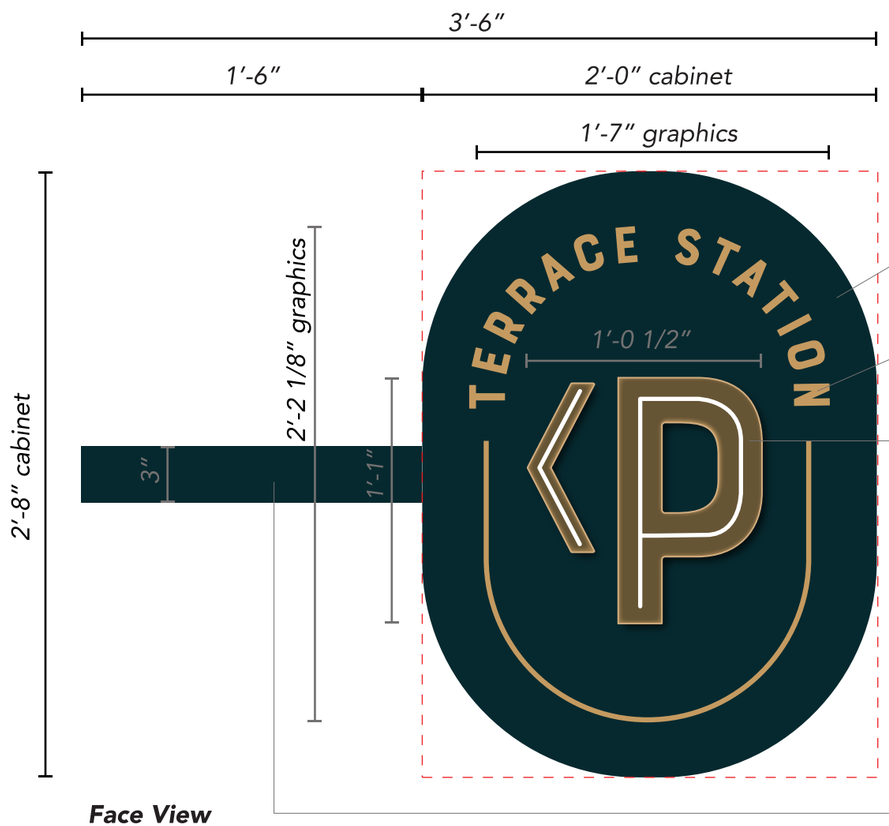

Face View

6″ deep fabricated alum. cabinet. Faces and returns painted navy, satin finish. Removable faces.

1/4″ clear acrylic push through graphics with gold translucent vinyl applied to faces. Illuminate with white LEDs.

3″ Alum. open pan channel graphics. Paint faces and returns gold. 8mm white single tube neon.

3″ alum. square tube arm. Paint navy, satin finish.

Attach with 3/8″ x 8″ x 8″ square tube knife plate.

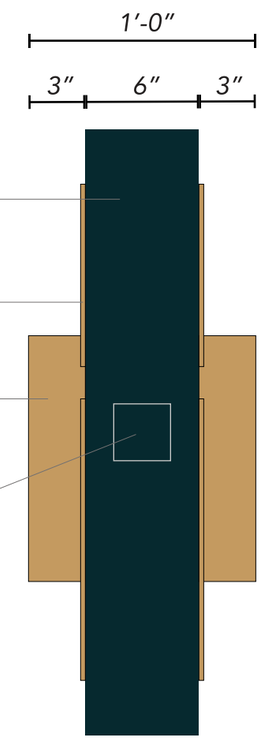

End View

Signs B1-S07, B1-S08 & B1-S09: *Manufacture & install (3) double face illuminated blade signs with neon open pan channel graphics.*

Sign Area: 5.3 Square Feet

CLIENT TO PROVIDE
20 AMP / 120 VOLT
DEDICATED SIGN CIRCUIT WITHIN
6 FT OF SIGN LOCATION

Reverse Face View (NTS)

A DESIGN STUDIO

MAIN CONTACT
Gracia Mueller
360.929.3077

CREATIVE
Brody Lund
425.359.7380

Additional information:
adesignstudioseattle.com

Follow us on social:
@adesignstudioseattle

COPYRIGHT
All artwork contained herein is the copyrighted property of A Design Studio Seattle. This includes, but is not limited to, logos, specifications, artwork and engineering. Any usage beyond internal reviews shall require our appoval and a separate design fee paid to A Design Studio Seattle. Usage rights can also be purchased (limited or complete) for an additional fee. Any unlawful distribution of said artwork is a violation of federal copyright laws.

PROJECT NAME
Terrace Station

PROJECT #
20-004

ADDRESS
24000 Van Ry Blvd
Mountlake Terrace, WA 98043

DATE
08/05/20

VERSION NOTES

V1	07/14 Concept design
V2	07/31 Revise signs
V3	08/06 Revise signs
V4	08/22 Revise signs
V5	10/02 Revise signs
V6	11/19 Revise signs
V7	01/02 Revise signs
V8	02/20 Revise all concepts & signs
V9	02/24 Revise signs
V10	03/19 Add signs, revise narrative
V11	05/19 Add/revise signs, revise all B3
V12	05/22 Revise B3 & directional signs
V13	06/02 Revise B1 canopy details
V14	08/05 Revise per city comments
V15	

PAGE SCALE
1 1/2″ = 1′-0″

PAGE #
47

B1-S07 - ATTACHMENT DETAILS

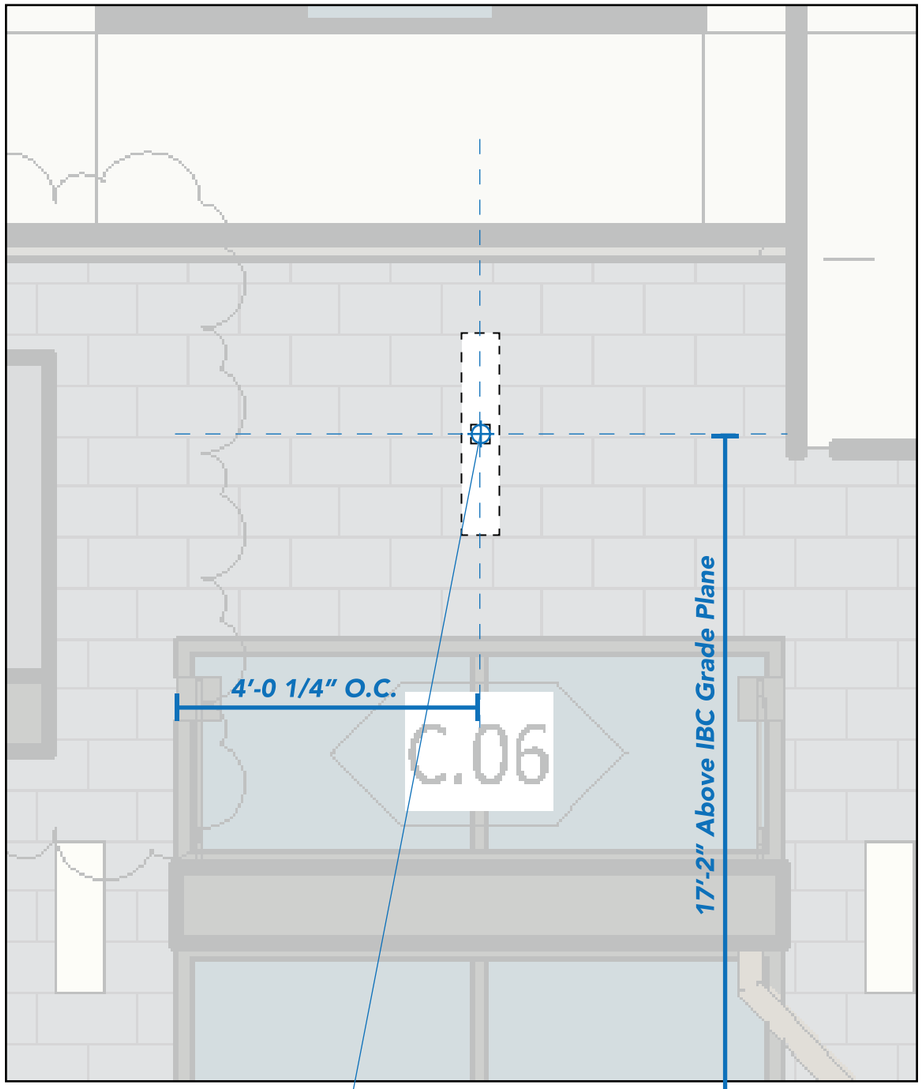

B1 East Elevation
Scale: 1/2"=1'-0"

Primary Electrical Location
Client to provide 20 Amp / 120 Volt dedicated circuit to sign location

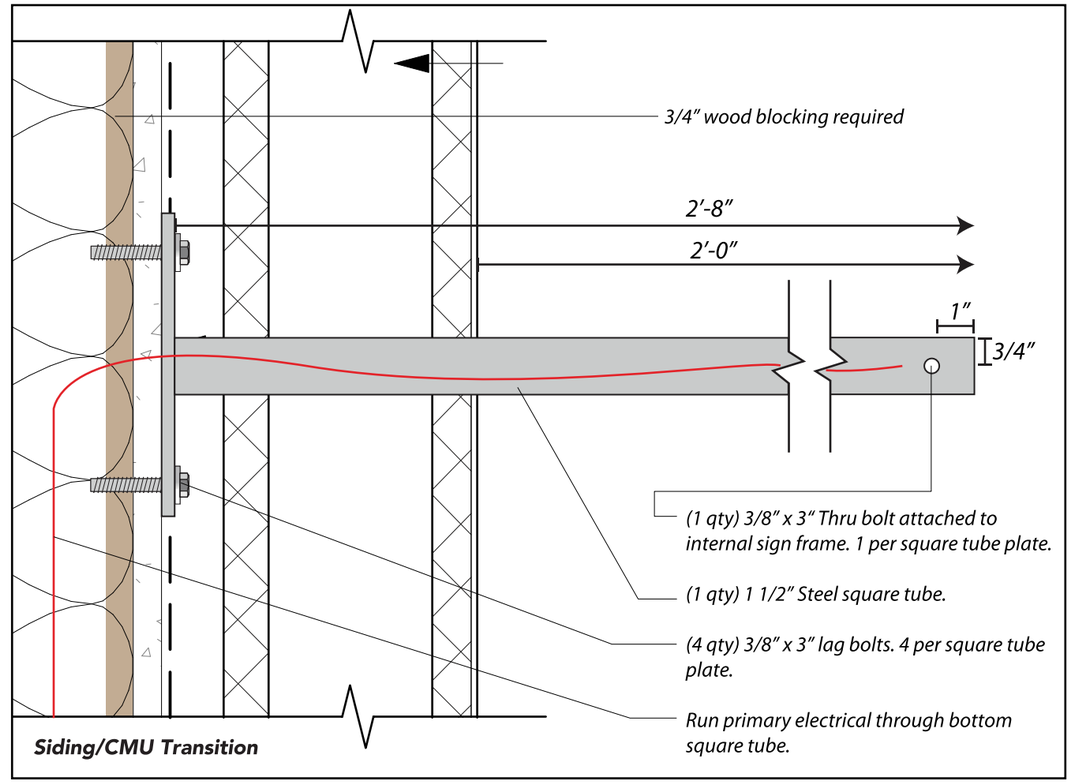

Knife Plate Install Detail
Scale: 3"=1'-0"

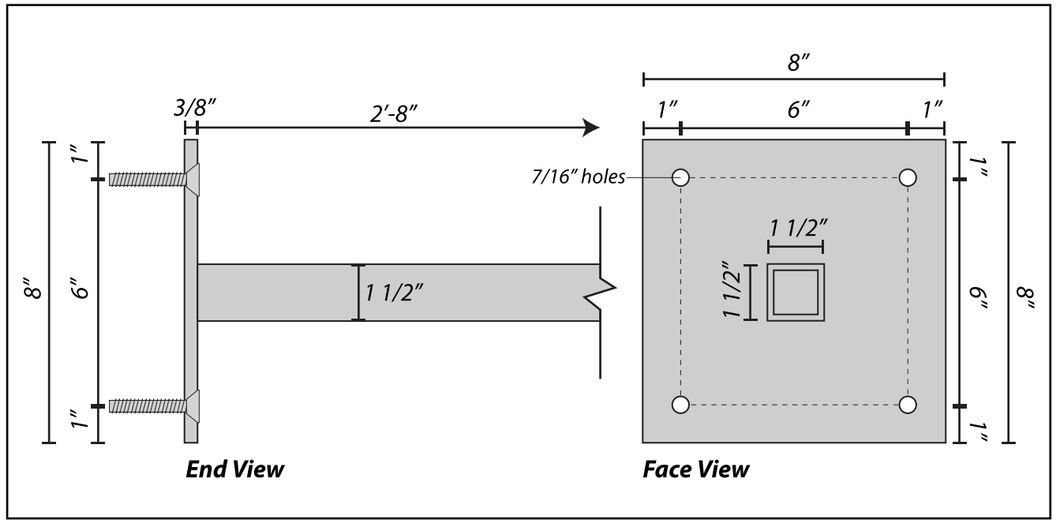

3/8" x 8" x 8" Steel Square Tube Plate Detail
Scale: 3"=1'-0"

A DESIGN STUDIO

MAIN CONTACT
Gracia Mueller
360.929.3077

CREATIVE
Brody Lund
425.359.7380

Additional information:
adesignstudioseattle.com

Follow us on social:
@adesignstudioseattle

COPYRIGHT
All artwork contained herein is the copyrighted property of A Design Studio Seattle. This includes, but is not limited to, logos, specifications, artwork and engineering. Any usage beyond internal reviews shall require our appoval and a separate design fee paid to A Design Studio Seattle. Usage rights can also be purchased (limited or complete) for an additional fee. Any unlawful distribution of said artwork is a violation of federal copyright laws.

PROJECT NAME
Terrace Station

PROJECT #
20-004

ADDRESS
24000 Van Ry Blvd
Mountlake Terrace, WA 98043

DATE
08/05/20

VERSION NOTES

V1	07/14 Concept design
V2	07/31 Revise signs
V3	08/06 Revise signs
V4	08/22 Revise signs
V5	10/02 Revise signs
V6	11/19 Revise signs
V7	01/02 Revise signs
V8	02/20 Revise all concepts & signs
V9	02/24 Revise signs
V10	03/19 Add signs, revise narrative
V11	05/19 Add/revise signs, revise all B3
V12	05/22 Revise B3 & directional signs
V13	06/02 Revise B1 canopy details
V14	08/05 Revise per city comments
V15	

PAGE SCALE
As Noted

PAGE #

B1-S08 - ATTACHMENT DETAILS

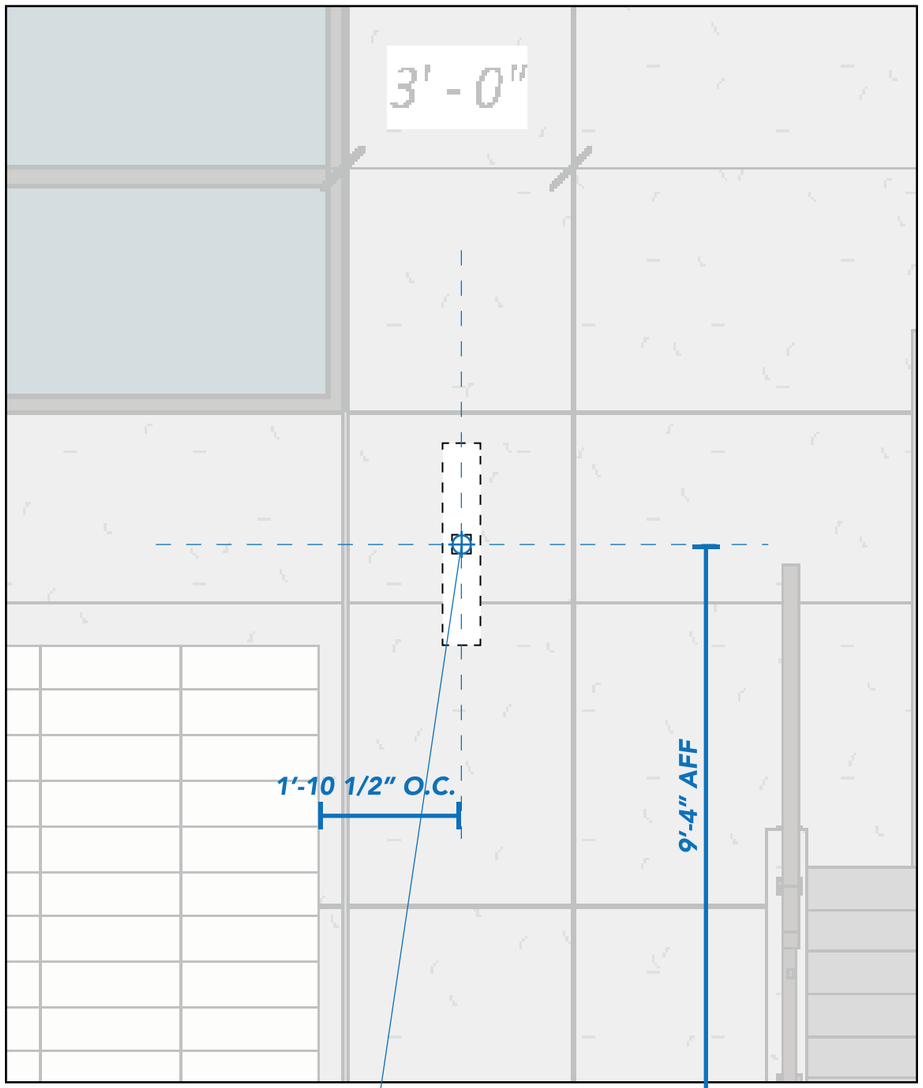

B1 South Elevation
Scale: 1/2"=1'-0"

Primary Electrical Location
Client to provide 20 Amp / 120 Volt dedicated circuit to sign location

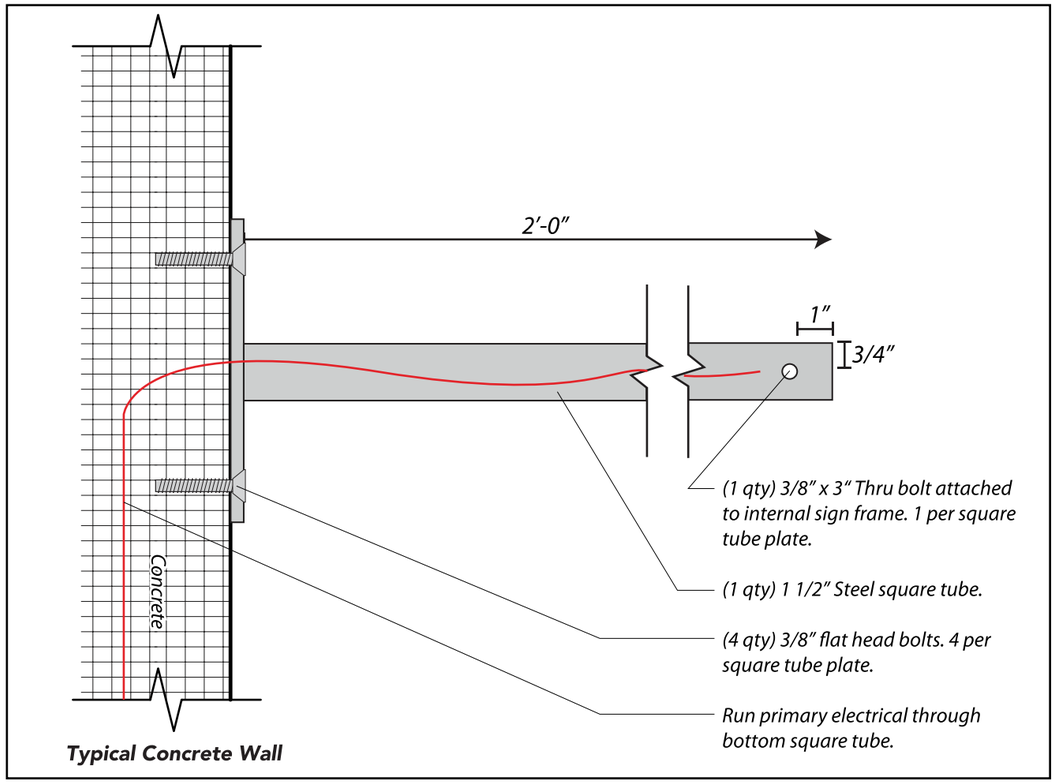

Square Tube Plate Install Detail
Scale: 3"=1'-0"

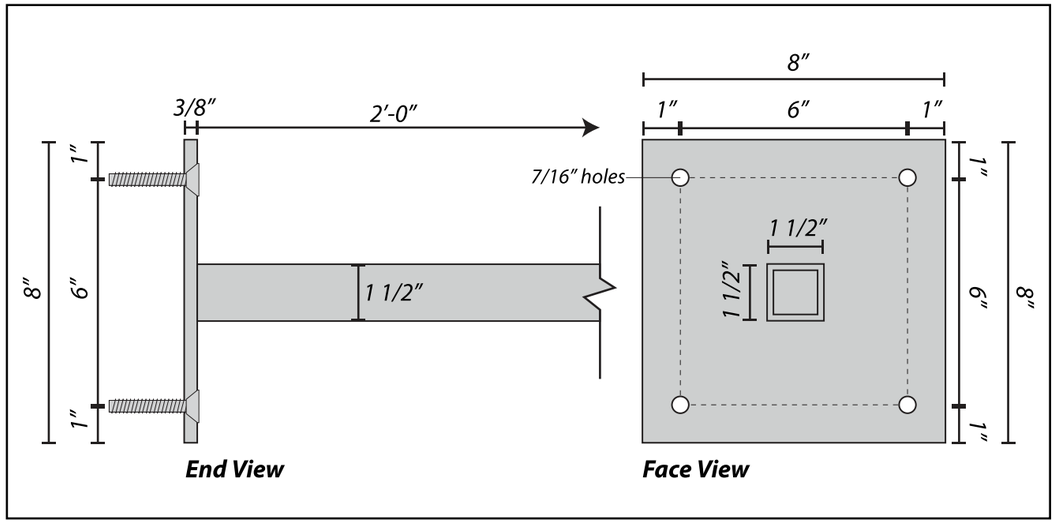

3/8" x 8" x 8" Steel Square Tube Plate Detail
Scale: 3"=1'-0"

A DESIGN STUDIO

MAIN CONTACT
Gracia Mueller
360.929.3077

CREATIVE
Brody Lund
425.359.7380

Additional information:
adesignstudioseattle.com

Follow us on social:
@adesignstudioseattle

COPYRIGHT
All artwork contained herein is the copyrighted property of A Design Studio Seattle. This includes, but is not limited to, logos, specifications, artwork and engineering. Any usage beyond internal reviews shall require our appoval and a separate design fee paid to A Design Studio Seattle. Usage rights can also be purchased (limited or complete) for an additional fee. Any unlawful distribution of said artwork is a violation of federal copyright laws.

PROJECT NAME
Terrace Station

PROJECT #
20-004

ADDRESS
24000 Van Ry Blvd
Mountlake Terrace, WA 98043

DATE
08/05/20

VERSION NOTES

V1	07/14 Concept design
V2	07/31 Revise signs
V3	08/06 Revise signs
V4	08/22 Revise signs
V5	10/02 Revise signs
V6	11/19 Revise signs
V7	01/02 Revise signs
V8	02/20 Revise all concepts & signs
V9	02/24 Revise signs
V10	03/19 Add signs, revise narrative
V11	05/19 Add/revise signs, revise all B3
V12	05/22 Revise B3 & directional signs
V13	06/02 Revise B1 canopy details
V14	08/05 Revise per city comments
V15	

PAGE SCALE
As Noted

PAGE #

B1-S09 - ATTACHMENT DETAILS

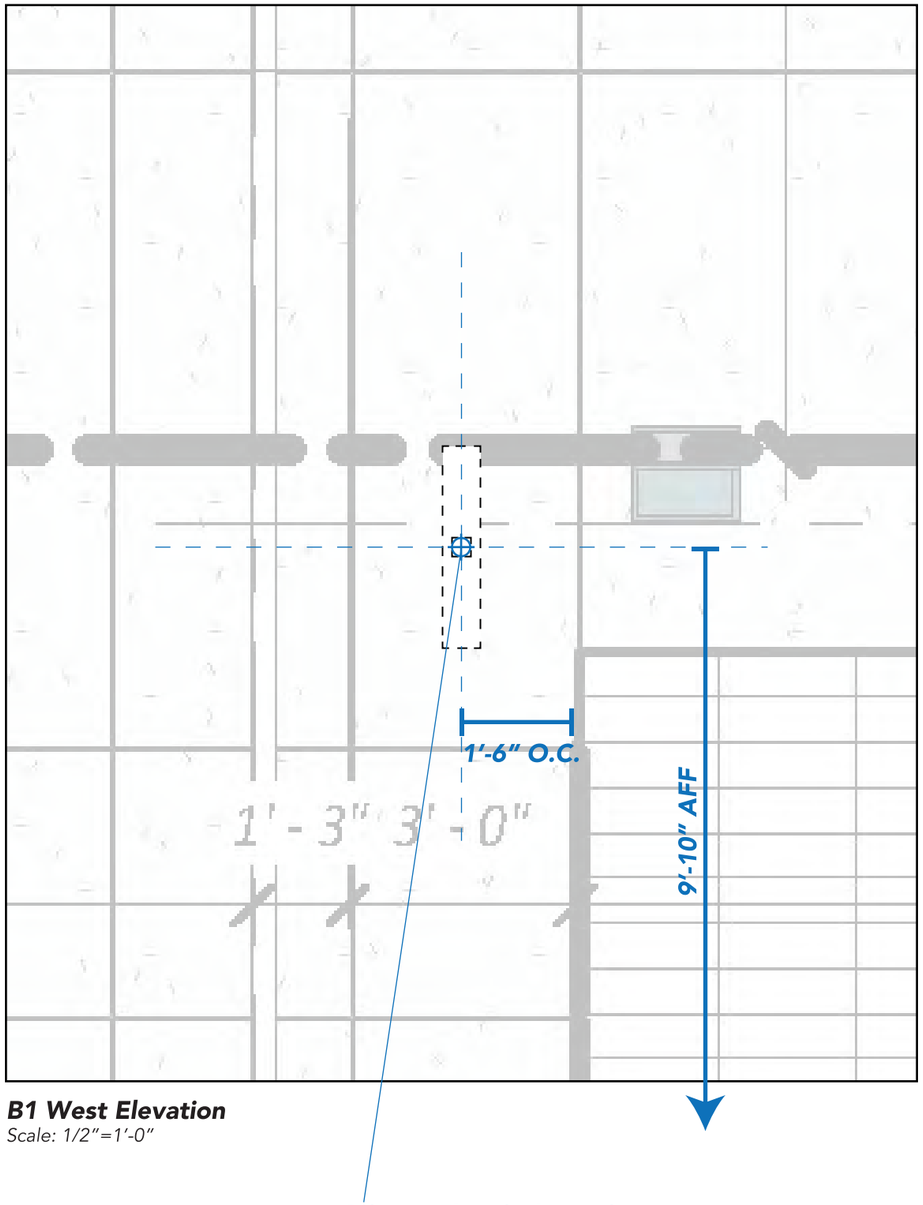

B1 West Elevation
Scale: 1/2"=1'-0"

Primary Electrical Location
Client to provide 20 Amp / 120 Volt dedicated circuit to sign location

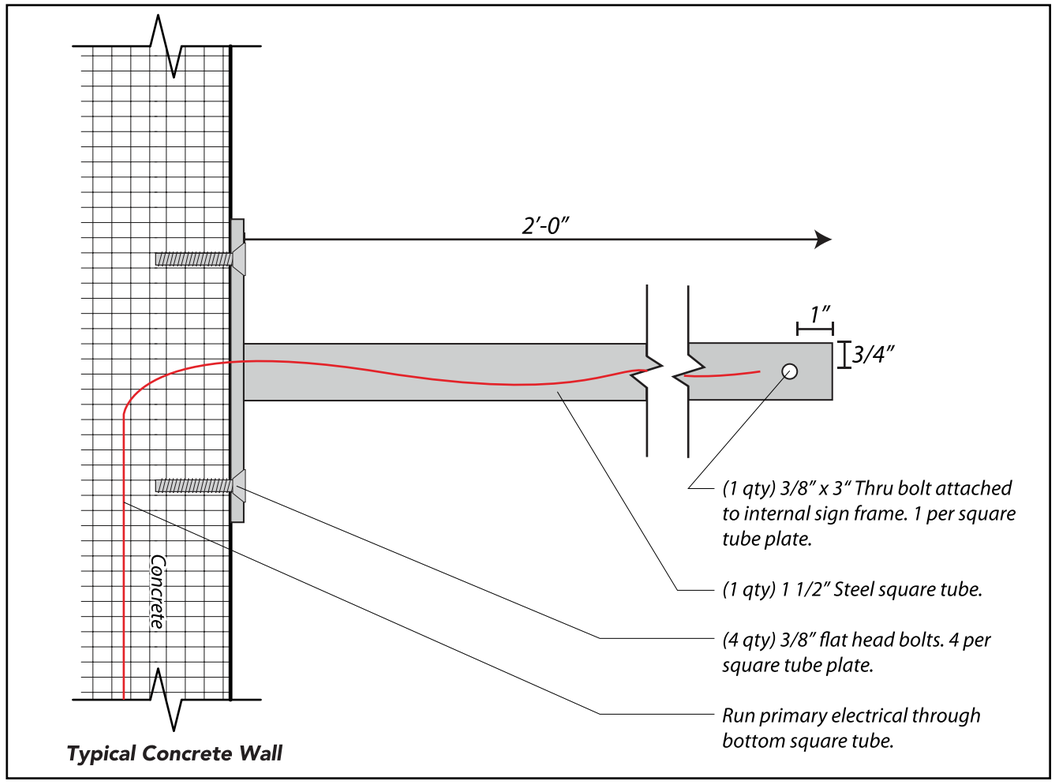

Square Tube Plate Install Detail
Scale: 3"=1'-0"

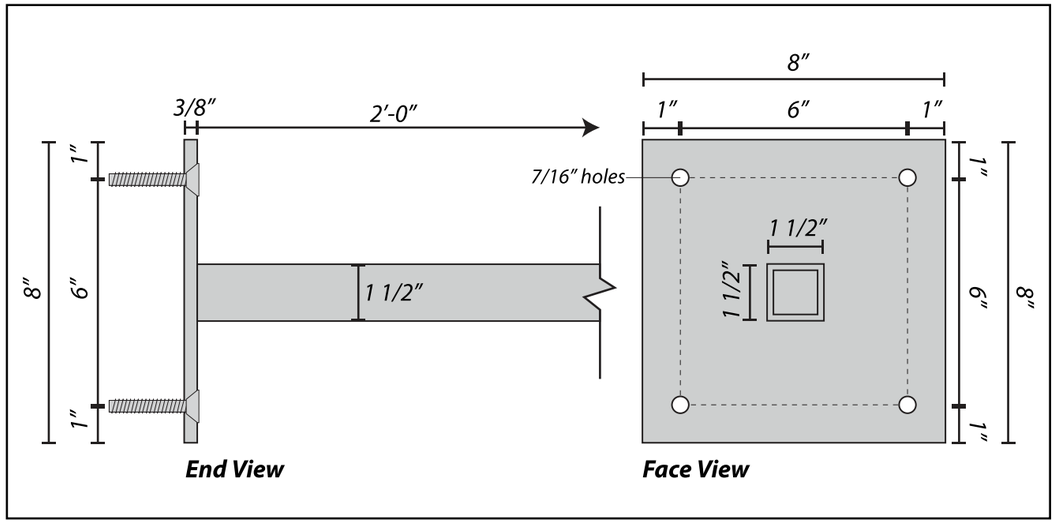

3/8" x 8" x 8" Steel Square Tube Plate Detail
Scale: 3"=1'-0"

A DESIGN STUDIO

MAIN CONTACT
Gracia Mueller
360.929.3077

CREATIVE
Brody Lund
425.359.7380

Additional information:
adesignstudioseattle.com

Follow us on social:
@adesignstudioseattle

COPYRIGHT
All artwork contained herein is the copyrighted property of A Design Studio Seattle. This includes, but is not limited to, logos, specifications, artwork and engineering. Any usage beyond internal reviews shall require our appoval and a separate design fee paid to A Design Studio Seattle. Usage rights can also be purchased (limited or complete) for an additional fee. Any unlawful distribution of said artwork is a violation of federal copyright laws.

PROJECT NAME
Terrace Station

PROJECT #
20-004

ADDRESS
24000 Van Ry Blvd
Mountlake Terrace, WA 98043

DATE
08/05/20

VERSION NOTES

V1	07/14 Concept design
V2	07/31 Revise signs
V3	08/06 Revise signs
V4	08/22 Revise signs
V5	10/02 Revise signs
V6	11/19 Revise signs
V7	01/02 Revise signs
V8	02/20 Revise all concepts & signs
V9	02/24 Revise signs
V10	03/19 Add signs, revise narrative
V11	05/19 Add/revise signs, revise all B3
V12	05/22 Revise B3 & directional signs
V13	06/02 Revise B1 canopy details
V14	08/05 Revise per city comments
V15	

PAGE SCALE
As Noted

PAGE #
50

B1-S09.1 - ELEVATIONS

Sign Area: 33.0 Square Feet

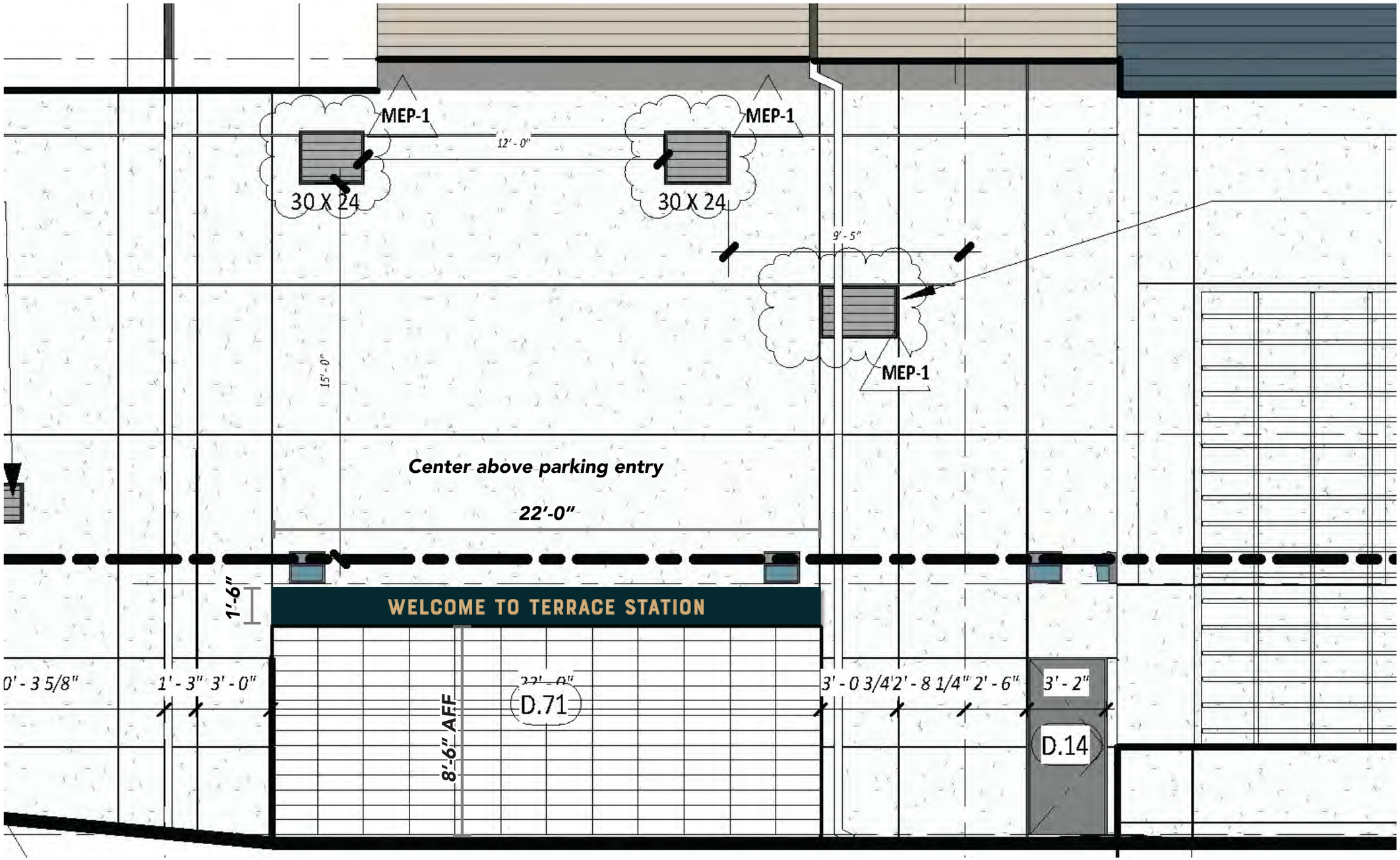

B1 West Elevation

A DESIGN STUDIO

MAIN CONTACT
Gracia Mueller
360.929.3077

CREATIVE
Brody Lund
425.359.7380

Additional information:
adesignstudioseattle.com

Follow us on social:
@adesignstudioseattle

COPYRIGHT
All artwork contained herein is the copyrighted property of A Design Studio Seattle. This includes, but is not limited to, logos, specifications, artwork and engineering. Any usage beyond internal reviews shall require our appoval and a separate design fee paid to A Design Studio Seattle. Usage rights can also be purchased (limited or complete) for an additional fee. Any unlawful distribution of said artwork is a violation of federal copyright laws.

PROJECT NAME
Terrace Station

PROJECT #
20-004

ADDRESS
24000 Van Ry Blvd
Mountlake Terrace, WA 98043

DATE
08/05/20

VERSION NOTES

V1	07/14 Concept design
V2	07/31 Revise signs
V3	08/06 Revise signs
V4	08/22 Revise signs
V5	10/02 Revise signs
V6	11/19 Revise signs
V7	01/02 Revise signs
V8	02/20 Revise all concepts & signs
V9	02/24 Revise signs
V10	03/19 Add signs, revise narrative
V11	05/19 Add/revise signs, revise all B3
V12	05/22 Revise B3 & directional signs
V13	06/02 Revise B1 canopy details
V14	08/05 Revise per city comments
V15	

PAGE SCALE
1/4" = 1'-0"

PAGE #

B1-S09.1 - DETAILS

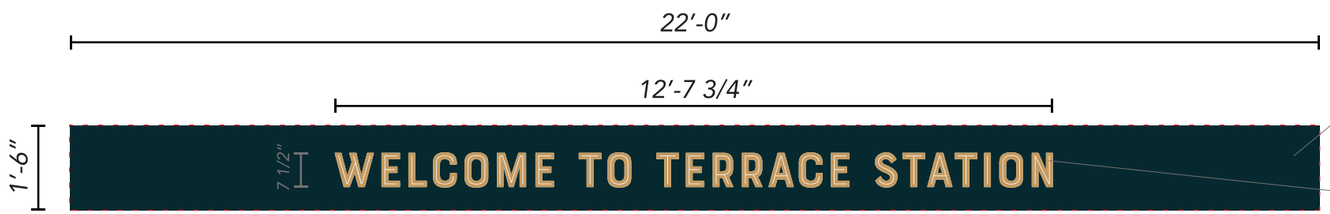

Face View

3″ deep alum. cabinet. Removable faces. Paint navy, satin finish.

1/4″ FCO alum. lettering. Paint gold and white as shown, satin finish.

Attach with 3/8″ x 8″ x 8″ knife plates, min (1) every 48″.

End View

Sign B1-S09.1: *Manufacture & install (1) single face non-illuminated wall sign with FCO graphics.*

Sign Area: 33.0 Square Feet

A DESIGN STUDIO

MAIN CONTACT
Gracia Mueller
360.929.3077

CREATIVE
Brody Lund
425.359.7380

Additional information:
adesignstudioseattle.com

Follow us on social:
@adesignstudioseattle

COPYRIGHT
All artwork contained herein is the copyrighted property of A Design Studio Seattle. This includes, but is not limited to, logos, specifications, artwork and engineering. Any usage beyond internal reviews shall require our appoval and a separate design fee paid to A Design Studio Seattle. Usage rights can also be purchased (limited or complete) for an additional fee. Any unlawful distribution of said artwork is a violation of federal copyright laws.

PROJECT NAME
Terrace Station

PROJECT #
20-004

ADDRESS
24000 Van Ry Blvd
Mountlake Terrace, WA 98043

DATE
08/05/20

VERSION NOTES

V1	07/14 Concept design
V2	07/31 Revise signs
V3	08/06 Revise signs
V4	08/22 Revise signs
V5	10/02 Revise signs
V6	11/19 Revise signs
V7	01/02 Revise signs
V8	02/20 Revise all concepts & signs
V9	02/24 Revise signs
V10	03/19 Add signs, revise narrative
V11	05/19 Add/revise signs, revise all B3
V12	05/22 Revise B3 & directional signs
V13	06/02 Revise B1 canopy details
V14	08/05 Revise per city comments
V15	

PAGE SCALE
3/8″ = 1′-0″

PAGE #

B1-S09.1 - ATTACHMENT DETAILS

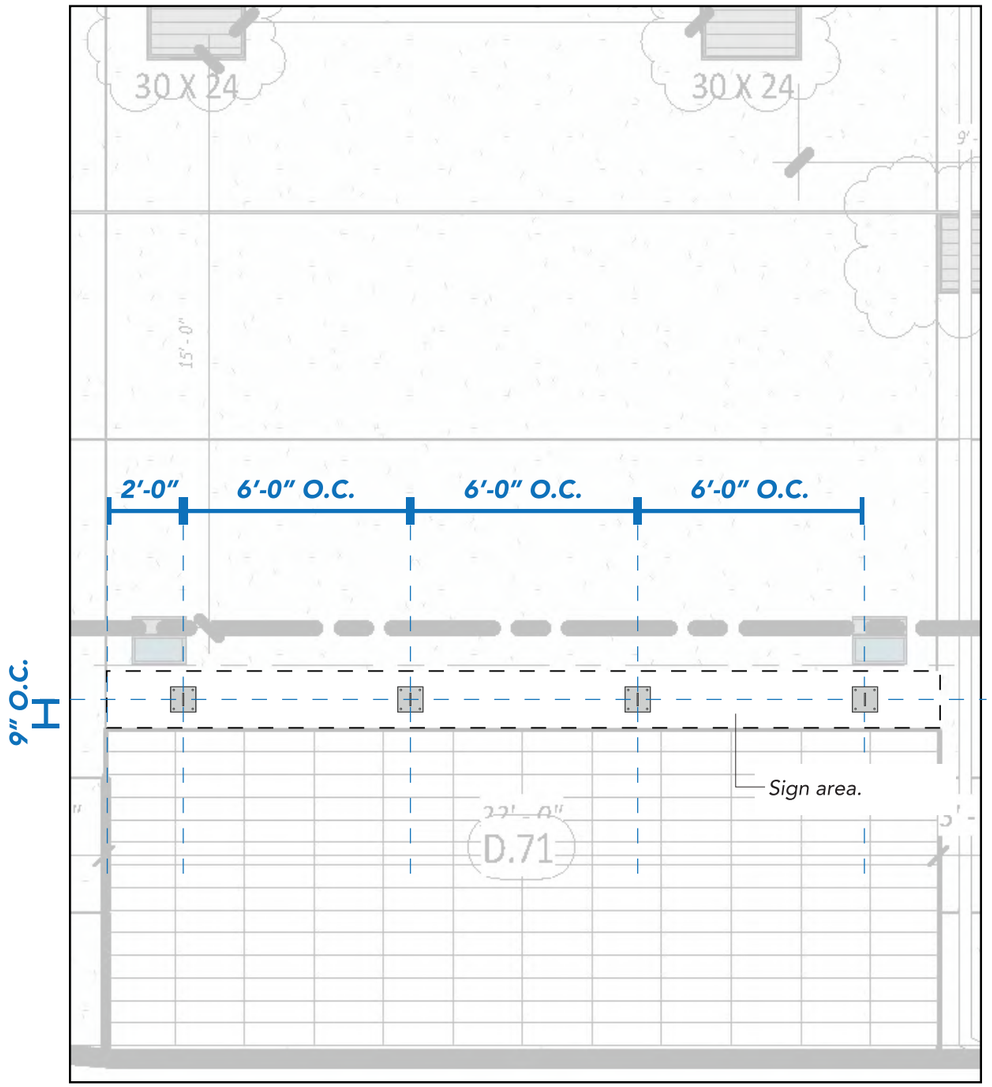

B1 West Elevation
Scale: 1/4"=1'-0"

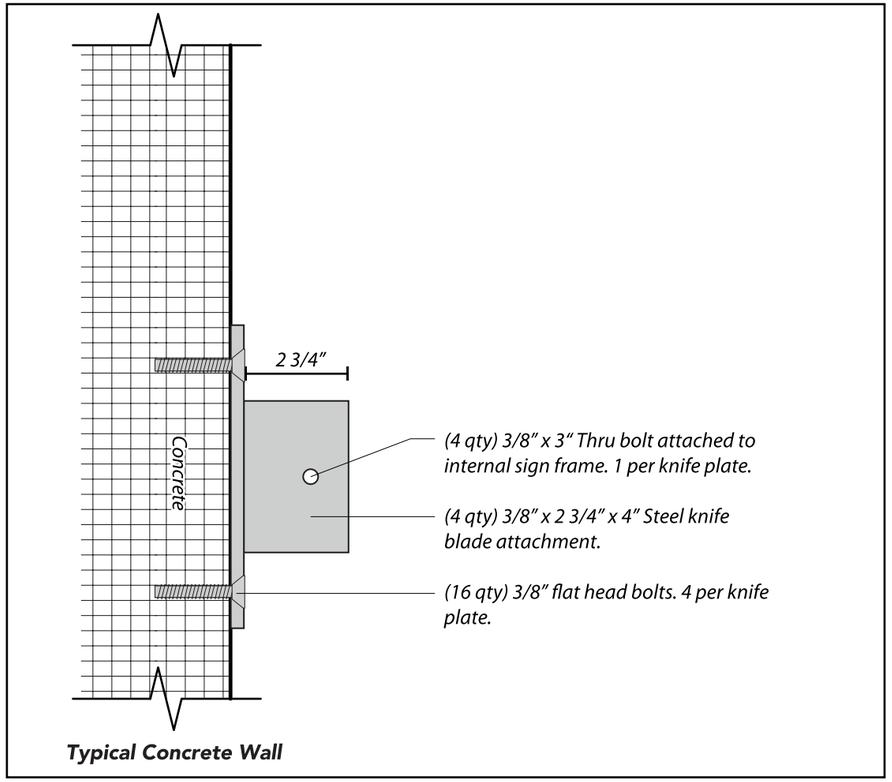

Knife Plate Install Detail
Scale: 3"=1'-0"

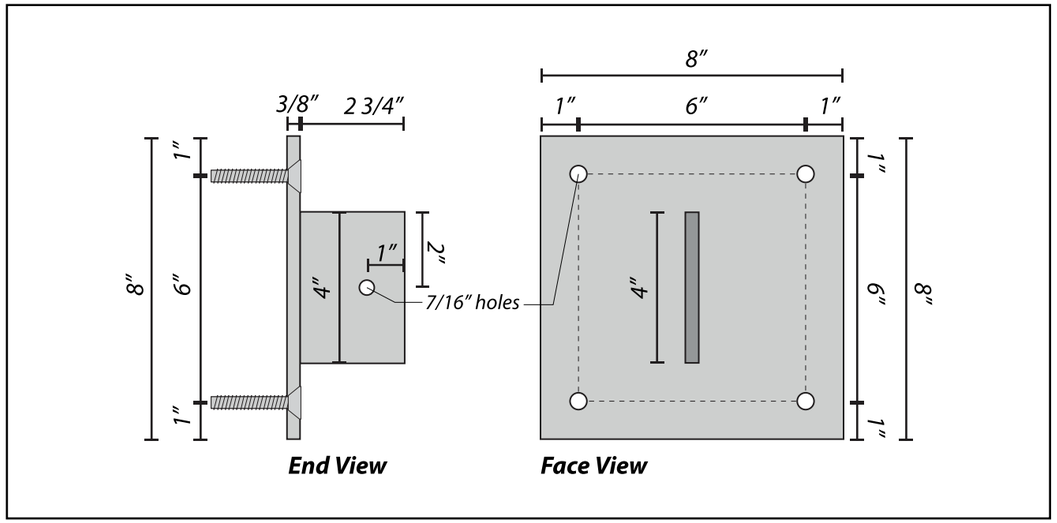

3/8" x 8" x 8" Steel Plate Detail
Scale: 3"=1'-0"

A DESIGN STUDIO

MAIN CONTACT
Gracia Mueller
360.929.3077

CREATIVE
Brody Lund
425.359.7380

Additional information:
adesignstudioseattle.com

Follow us on social:
@adesignstudioseattle

COPYRIGHT
All artwork contained herein is the copyrighted property of A Design Studio Seattle. This includes, but is not limited to, logos, specifications, artwork and engineering. Any usage beyond internal reviews shall require our appoval and a separate design fee paid to A Design Studio Seattle. Usage rights can also be purchased (limited or complete) for an additional fee. Any unlawful distribution of said artwork is a violation of federal copyright laws.

PROJECT NAME
Terrace Station

PROJECT #
20-004

ADDRESS
24000 Van Ry Blvd
Mountlake Terrace, WA 98043

DATE
08/05/20

VERSION NOTES

V1	07/14 Concept design
V2	07/31 Revise signs
V3	08/06 Revise signs
V4	08/22 Revise signs
V5	10/02 Revise signs
V6	11/19 Revise signs
V7	01/02 Revise signs
V8	02/20 Revise all concepts & signs
V9	02/24 Revise signs
V10	03/19 Add signs, revise narrative
V11	05/19 Add/revise signs, revise all B3
V12	05/22 Revise B3 & directional signs
V13	06/02 Revise B1 canopy details
V14	08/05 Revise per city comments
V15	

PAGE SCALE
As Noted

PAGE #
53

B1-S10 - ELEVATIONS

Sign Area: 44.0 Square Feet

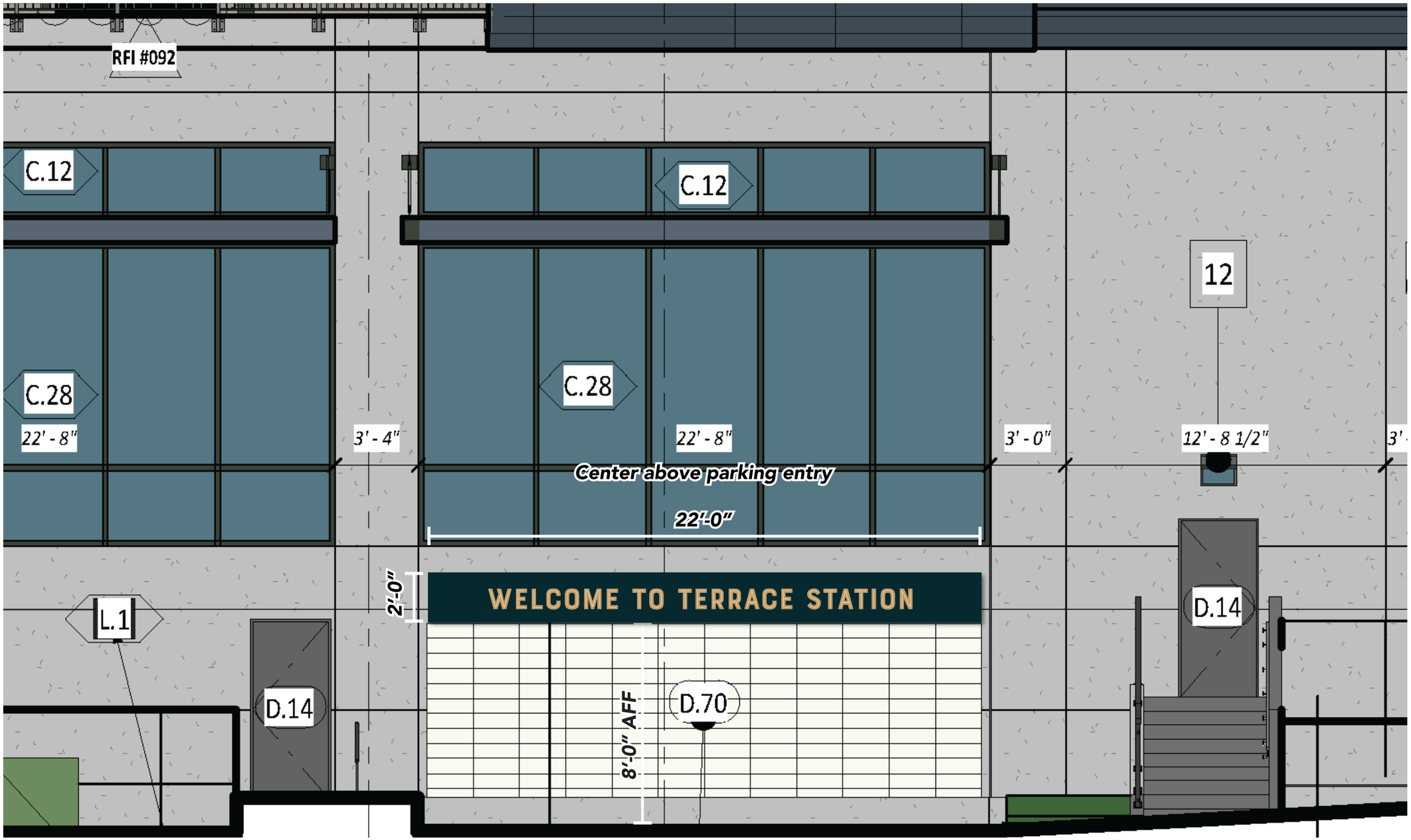

B1 South Elevation

A DESIGN STUDIO

MAIN CONTACT
Gracia Mueller
360.929.3077

CREATIVE
Brody Lund
425.359.7380

Additional information:
adesignstudioseattle.com

Follow us on social:
@adesignstudioseattle

COPYRIGHT
All artwork contained herein is the copyrighted property of A Design Studio Seattle. This includes, but is not limited to, logos, specifications, artwork and engineering. Any usage beyond internal reviews shall require our appoval and a separate design fee paid to A Design Studio Seattle. Usage rights can also be purchased (limited or complete) for an additional fee. Any unlawful distribution of said artwork is a violation of federal copyright laws.

PROJECT NAME
Terrace Station

PROJECT #
20-004

ADDRESS
24000 Van Ry Blvd
Mountlake Terrace, WA 98043

DATE
08/05/20

VERSION NOTES

V1	07/14 Concept design
V2	07/31 Revise signs
V3	08/06 Revise signs
V4	08/22 Revise signs
V5	10/02 Revise signs
V6	11/19 Revise signs
V7	01/02 Revise signs
V8	02/20 Revise all concepts & signs
V9	02/24 Revise signs
V10	03/19 Add signs, revise narrative
V11	05/19 Add/revise signs, revise all B3
V12	05/22 Revise B3 & directional signs
V13	06/02 Revise B1 canopy details
V14	08/05 Revise per city comments
V15	

PAGE SCALE
1/4" = 1'-0"

PAGE #
54

B1-S10 - DETAILS

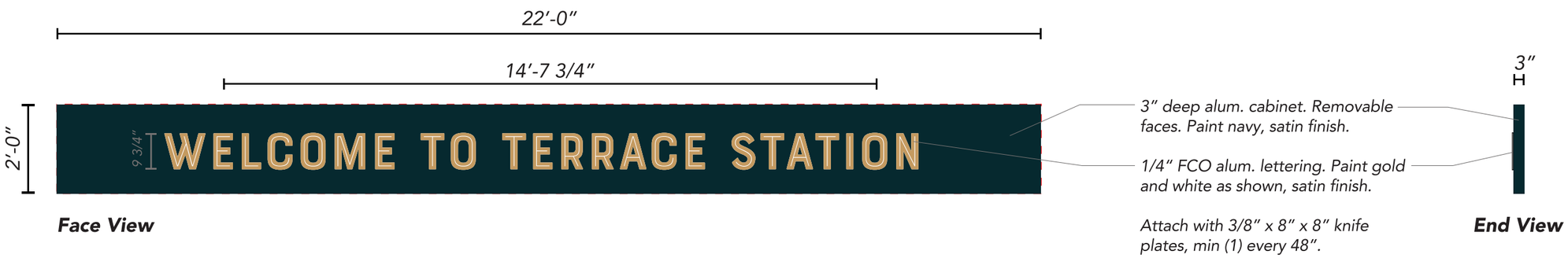

Sign B1-S10: *Manufacture & install (1) single face non-illuminated wall sign with FCO graphics.*

Sign Area: 44.0 Square Feet

A DESIGN STUDIO

MAIN CONTACT
Gracia Mueller
360.929.3077

CREATIVE
Brody Lund
425.359.7380

Additional information:
adesignstudioseattle.com

Follow us on social:
@adesignstudioseattle

COPYRIGHT
All artwork contained herein is the copyrighted property of A Design Studio Seattle. This includes, but is not limited to, logos, specifications, artwork and engineering. Any usage beyond internal reviews shall require our appoval and a separate design fee paid to A Design Studio Seattle. Usage rights can also be purchased (limited or complete) for an additional fee. Any unlawful distribution of said artwork is a violation of federal copyright laws.

PROJECT NAME
Terrace Station

PROJECT #
20-004

ADDRESS
24000 Van Ry Blvd
Mountlake Terrace, WA 98043

DATE
08/05/20

VERSION NOTES

V1	07/14 Concept design
V2	07/31 Revise signs
V3	08/06 Revise signs
V4	08/22 Revise signs
V5	10/02 Revise signs
V6	11/19 Revise signs
V7	01/02 Revise signs
V8	02/20 Revise all concepts & signs
V9	02/24 Revise signs
V10	03/19 Add signs, revise narrative
V11	05/19 Add/revise signs, revise all B3
V12	05/22 Revise B3 & directional signs
V13	06/02 Revise B1 canopy details
V14	08/05 Revise per city comments
V15	

PAGE SCALE
3/8″ = 1′-0″

PAGE #
55

B1-S10 - ATTACHMENT DETAILS

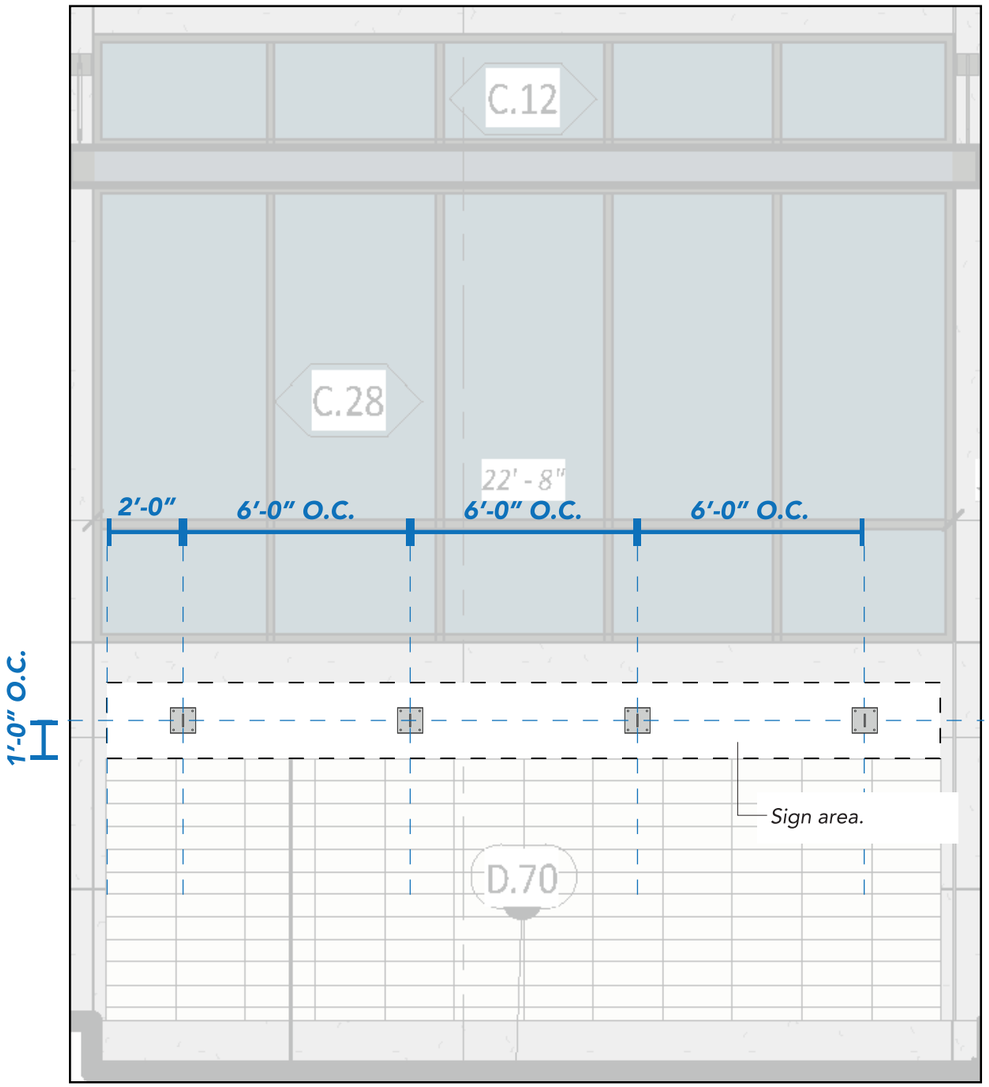

B1 South Elevation
Scale: 1/4"=1'-0"

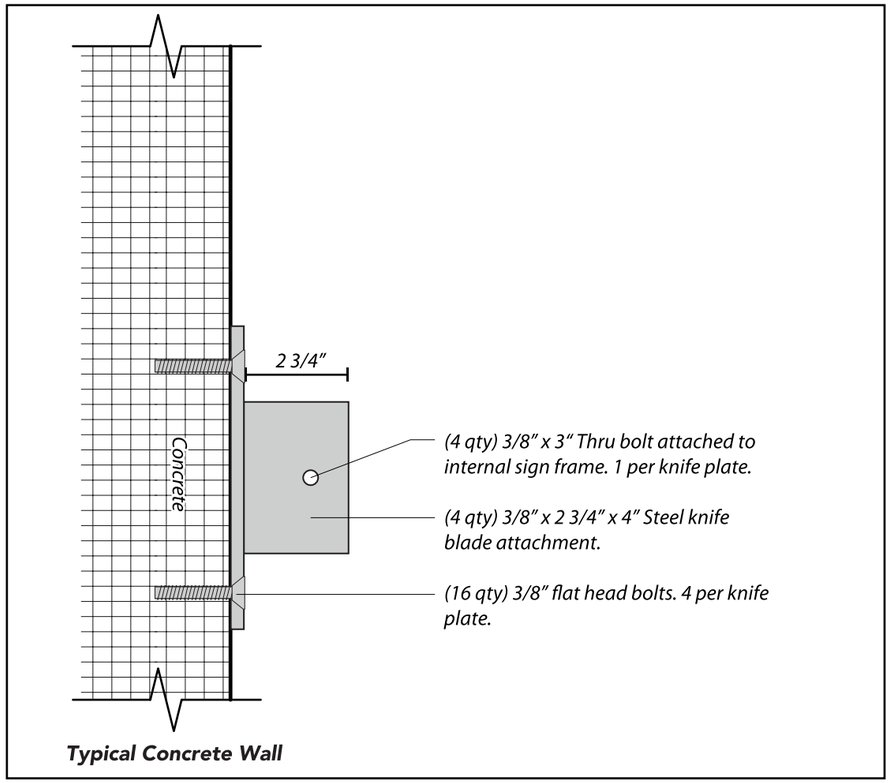

Knife Plate Install Detail
Scale: 3"=1'-0"

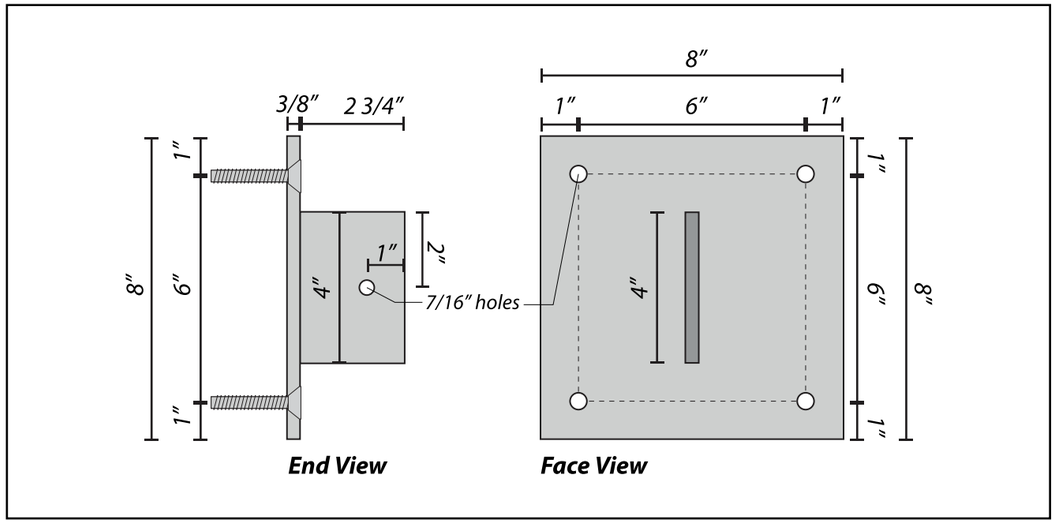

3/8" x 8" x 8" Steel Plate Detail
Scale: 3"=1'-0"

A DESIGN STUDIO

MAIN CONTACT
Gracia Mueller
360.929.3077

CREATIVE
Brody Lund
425.359.7380

Additional information:
adesignstudioseattle.com

Follow us on social:
@adesignstudioseattle

COPYRIGHT
All artwork contained herein is the copyrighted property of A Design Studio Seattle. This includes, but is not limited to, logos, specifications, artwork and engineering. Any usage beyond internal reviews shall require our appoval and a separate design fee paid to A Design Studio Seattle. Usage rights can also be purchased (limited or complete) for an additional fee. Any unlawful distribution of said artwork is a violation of federal copyright laws.

PROJECT NAME
Terrace Station

PROJECT #
20-004

ADDRESS
24000 Van Ry Blvd
Mountlake Terrace, WA 98043

DATE
08/05/20

VERSION NOTES

V1	07/14 Concept design
V2	07/31 Revise signs
V3	08/06 Revise signs
V4	08/22 Revise signs
V5	10/02 Revise signs
V6	11/19 Revise signs
V7	01/02 Revise signs
V8	02/20 Revise all concepts & signs
V9	02/24 Revise signs
V10	03/19 Add signs, revise narrative
V11	05/19 Add/revise signs, revise all B3
V12	05/22 Revise B3 & directional signs
V13	06/02 Revise B1 canopy details
V14	08/05 Revise per city comments
V15	

PAGE SCALE
As Noted

PAGE #
56

B1-S11 - ELEVATIONS

Sign Area: 44.0 Square Feet

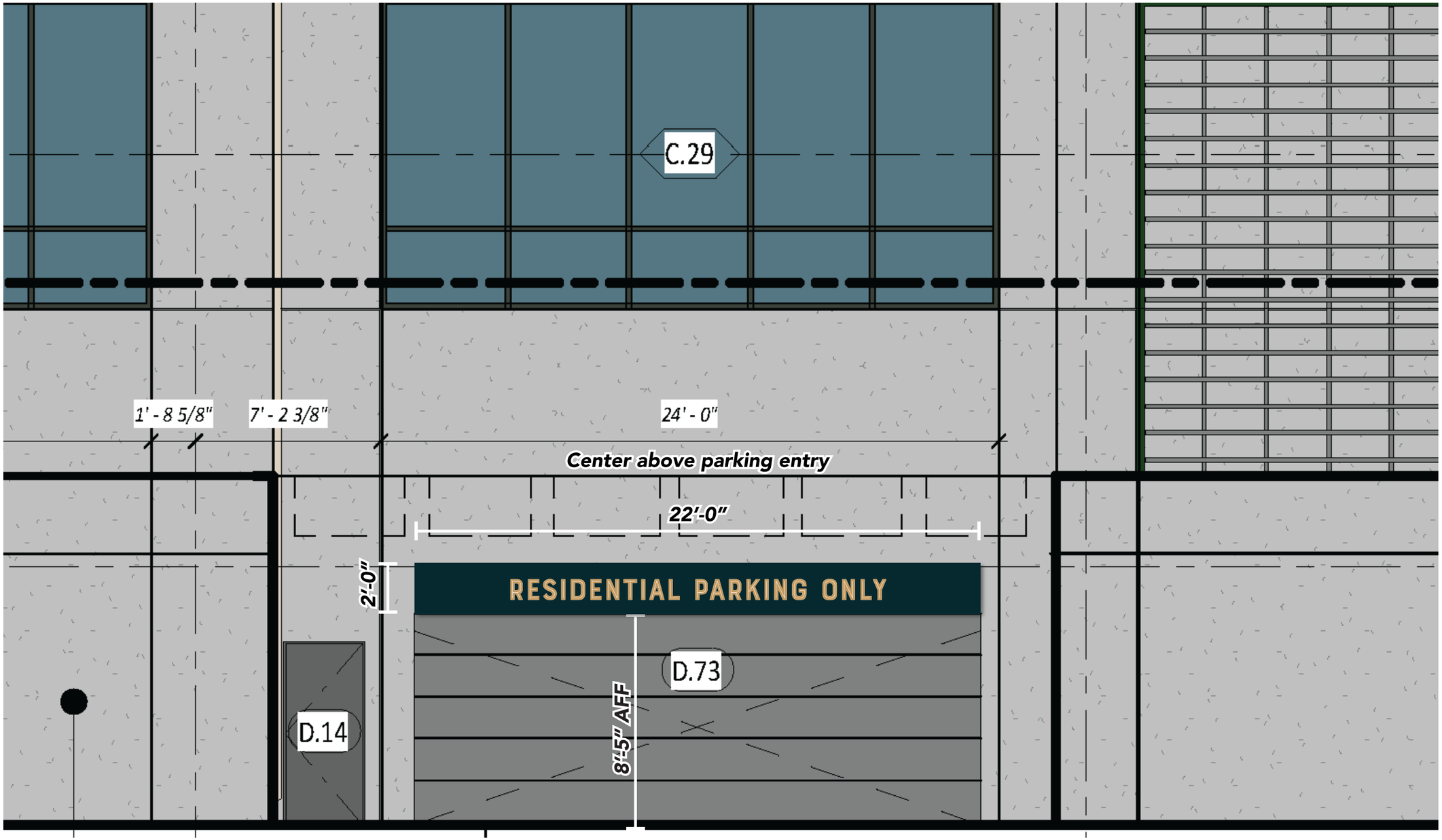

B1 West Elevation

A DESIGN STUDIO

MAIN CONTACT
Gracia Mueller
360.929.3077

CREATIVE
Brody Lund
425.359.7380

Additional information:
adesignstudioseattle.com

Follow us on social:
@adesignstudioseattle

COPYRIGHT
All artwork contained herein is the copyrighted property of A Design Studio Seattle. This includes, but is not limited to, logos, specifications, artwork and engineering. Any usage beyond internal reviews shall require our appoval and a separate design fee paid to A Design Studio Seattle. Usage rights can also be purchased (limited or complete) for an additional fee. Any unlawful distribution of said artwork is a violation of federal copyright laws.

PROJECT NAME
Terrace Station

PROJECT #
20-004

ADDRESS
24000 Van Ry Blvd
Mountlake Terrace, WA 98043

DATE
08/05/20

VERSION NOTES

V1	07/14 Concept design
V2	07/31 Revise signs
V3	08/06 Revise signs
V4	08/22 Revise signs
V5	10/02 Revise signs
V6	11/19 Revise signs
V7	01/02 Revise signs
V8	02/20 Revise all concepts & signs
V9	02/24 Revise signs
V10	03/19 Add signs, revise narrative
V11	05/19 Add/revise signs, revise all B3
V12	05/22 Revise B3 & directional signs
V13	06/02 Revise B1 canopy details
V14	08/05 Revise per city comments
V15	

PAGE SCALE
1/4" = 1'-0"

PAGE #

B1-S11 - DETAILS

Sign B1-S11: *Manufacture & install (1) single face non-illuminated wall sign with FCO graphics.*

Sign Area: 44.0 Square Feet

A DESIGN STUDIO

MAIN CONTACT
Gracia Mueller
360.929.3077

CREATIVE
Brody Lund
425.359.7380

Additional information:
adesignstudioseattle.com

Follow us on social:
@adesignstudioseattle

COPYRIGHT
All artwork contained herein is the copyrighted property of A Design Studio Seattle. This includes, but is not limited to, logos, specifications, artwork and engineering. Any usage beyond internal reviews shall require our appoval and a separate design fee paid to A Design Studio Seattle. Usage rights can also be purchased (limited or complete) for an additional fee. Any unlawful distribution of said artwork is a violation of federal copyright laws.

PROJECT NAME
Terrace Station

PROJECT #
20-004

ADDRESS
24000 Van Ry Blvd
Mountlake Terrace, WA 98043

DATE
08/05/20

VERSION NOTES

V1	07/14 Concept design
V2	07/31 Revise signs
V3	08/06 Revise signs
V4	08/22 Revise signs
V5	10/02 Revise signs
V6	11/19 Revise signs
V7	01/02 Revise signs
V8	02/20 Revise all concepts & signs
V9	02/24 Revise signs
V10	03/19 Add signs, revise narrative
V11	05/19 Add/revise signs, revise all B3
V12	05/22 Revise B3 & directional signs
V13	06/02 Revise B1 canopy details
V14	08/05 Revise per city comments
V15	

PAGE SCALE
3/8″ = 1′-0″

PAGE #
58

B1-S11 - ATTACHMENT DETAILS

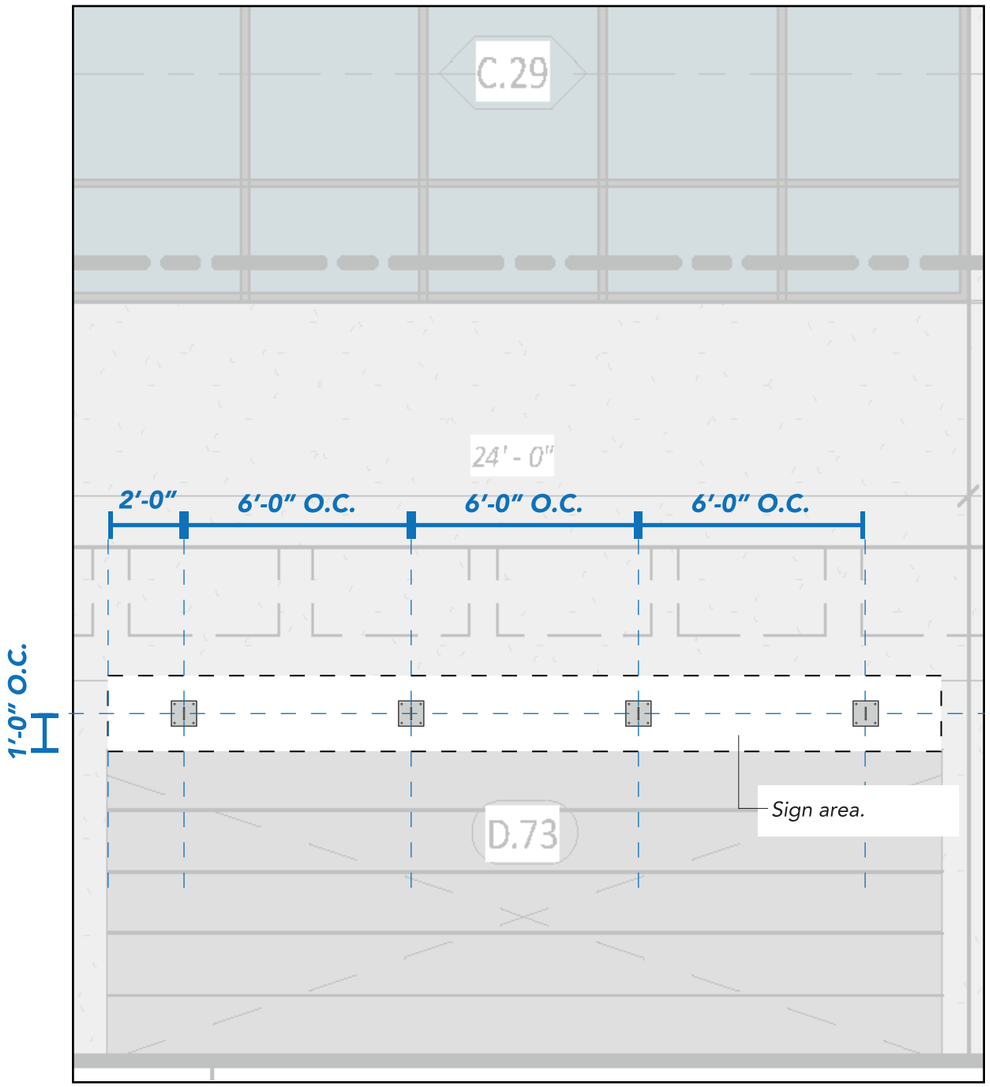

B1 West Elevation
Scale: 1/4"=1'-0"

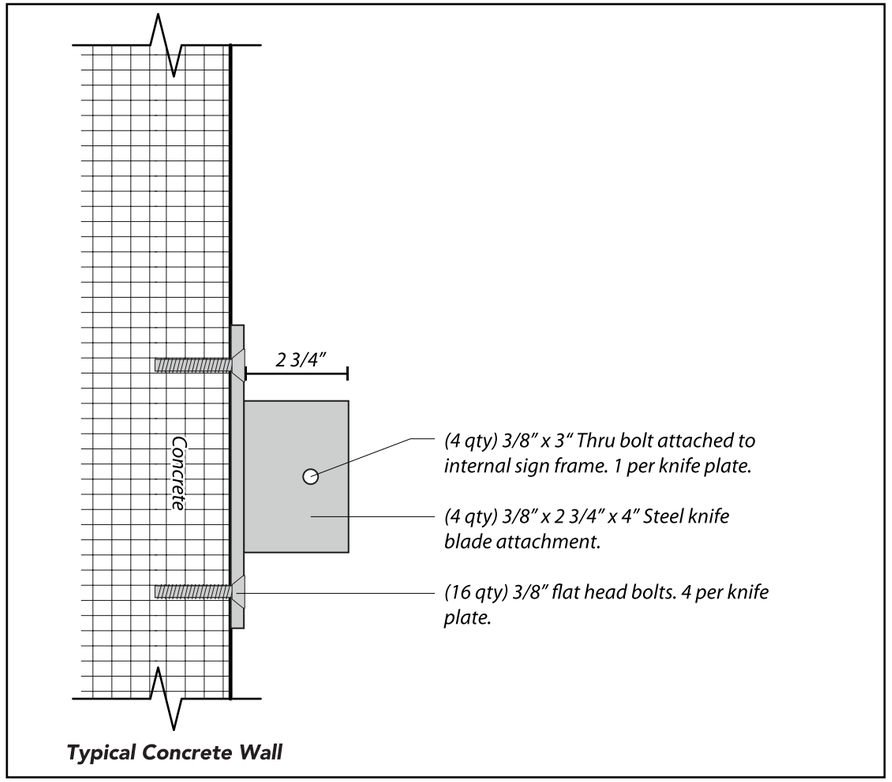

Knife Plate Install Detail
Scale: 3"=1'-0"

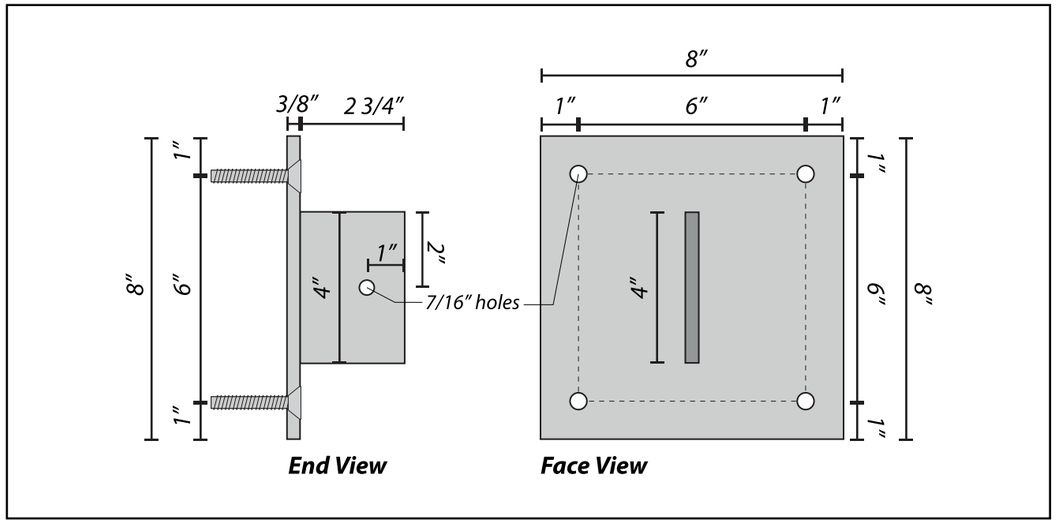

3/8" x 8" x 8" Steel Plate Detail
Scale: 3"=1'-0"

A DESIGN STUDIO

MAIN CONTACT
Gracia Mueller
360.929.3077

CREATIVE
Brody Lund
425.359.7380

Additional information:
adesignstudioseattle.com

Follow us on social:
@adesignstudioseattle

COPYRIGHT
All artwork contained herein is the copyrighted property of A Design Studio Seattle. This includes, but is not limited to, logos, specifications, artwork and engineering. Any usage beyond internal reviews shall require our appoval and a separate design fee paid to A Design Studio Seattle. Usage rights can also be purchased (limited or complete) for an additional fee. Any unlawful distribution of said artwork is a violation of federal copyright laws.

PROJECT NAME
Terrace Station

PROJECT #
20-004

ADDRESS
24000 Van Ry Blvd
Mountlake Terrace, WA 98043

DATE
08/05/20

VERSION NOTES

V1	07/14 Concept design
V2	07/31 Revise signs
V3	08/06 Revise signs
V4	08/22 Revise signs
V5	10/02 Revise signs
V6	11/19 Revise signs
V7	01/02 Revise signs
V8	02/20 Revise all concepts & signs
V9	02/24 Revise signs
V10	03/19 Add signs, revise narrative
V11	05/19 Add/revise signs, revise all B3
V12	05/22 Revise B3 & directional signs
V13	06/02 Revise B1 canopy details
V14	08/05 Revise per city comments
V15	

PAGE SCALE
As Noted

PAGE #
59

B1-S12 - ELEVATIONS

Sign Area: 40.0 Square Feet

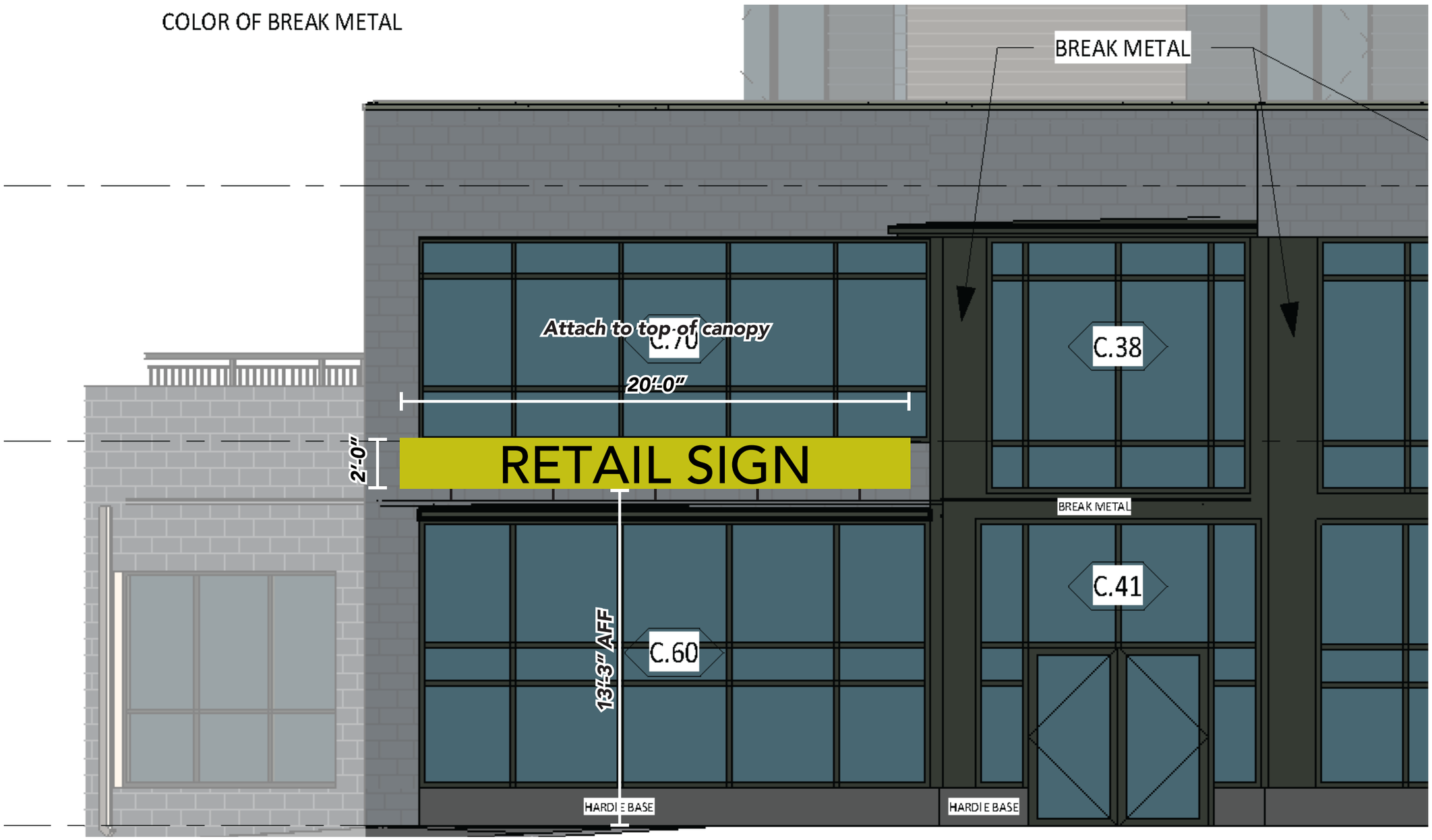

B1 East Elevation - Covered Outdoor Plaza

A DESIGN STUDIO

MAIN CONTACT
Gracia Mueller
360.929.3077

CREATIVE
Brody Lund
425.359.7380

Additional information:
adesignstudioseattle.com

Follow us on social:
@adesignstudioseattle

COPYRIGHT
All artwork contained herein is the copyrighted property of A Design Studio Seattle. This includes, but is not limited to, logos, specifications, artwork and engineering. Any usage beyond internal reviews shall require our appoval and a separate design fee paid to A Design Studio Seattle. Usage rights can also be purchased (limited or complete) for an additional fee. Any unlawful distribution of said artwork is a violation of federal copyright laws.

PROJECT NAME
Terrace Station

PROJECT #
20-004

ADDRESS
24000 Van Ry Blvd
Mountlake Terrace, WA 98043

DATE
08/05/20

VERSION NOTES

V1	07/14 Concept design
V2	07/31 Revise signs
V3	08/06 Revise signs
V4	08/22 Revise signs
V5	10/02 Revise signs
V6	11/19 Revise signs
V7	01/02 Revise signs
V8	02/20 Revise all concepts & signs
V9	02/24 Revise signs
V10	03/19 Add signs, revise narrative
V11	05/19 Add/revise signs, revise all B3
V12	05/22 Revise B3 & directional signs
V13	06/02 Revise B1 canopy details
V14	08/05 Revise per city comments
V15	

PAGE SCALE
1/4" = 1'-0"

PAGE #
60

B1-S12 - ATTACHMENT DETAILS

Glass to be installed AFTER knife plates: openings cut into glass to accomodate knife plates.

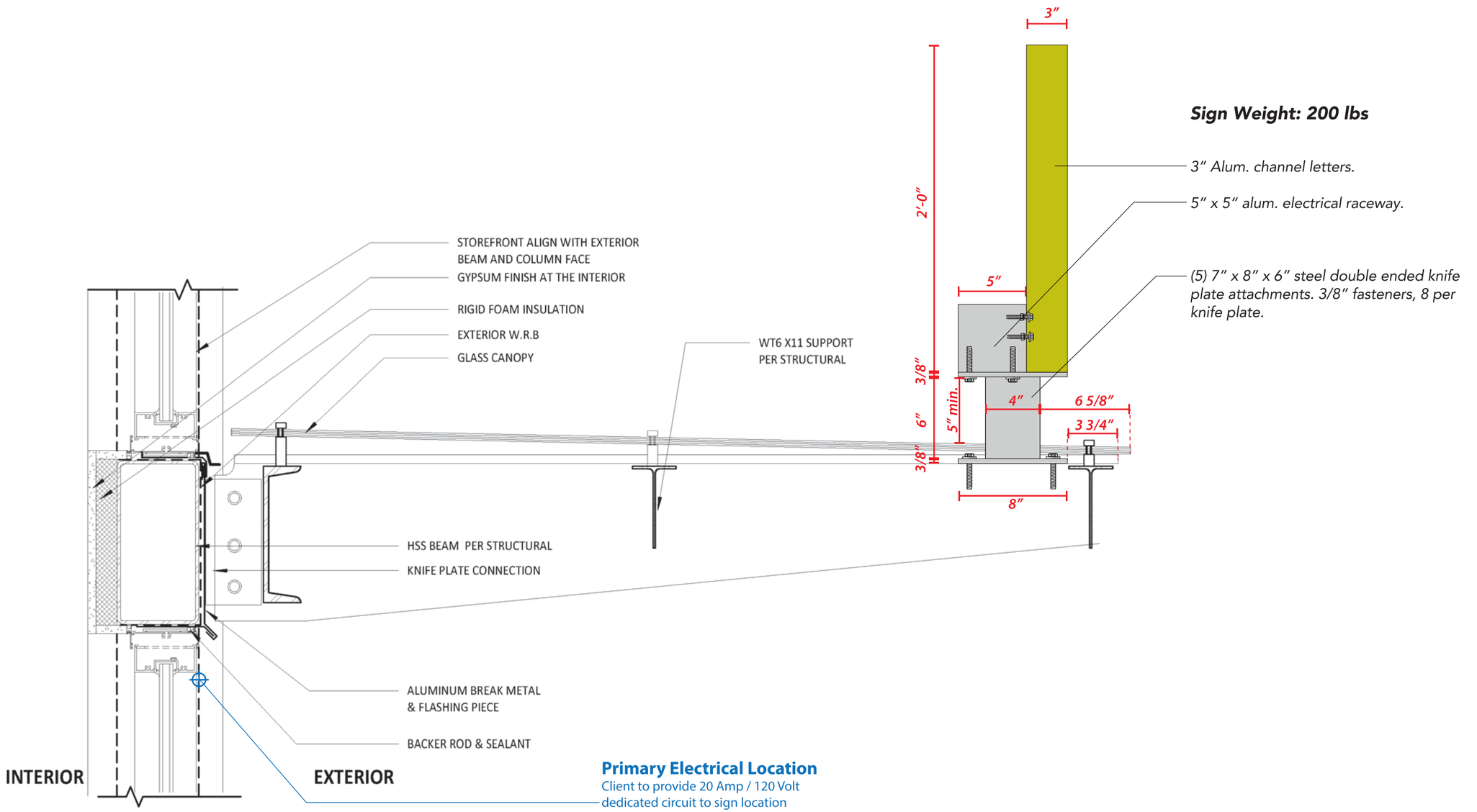

1 BEAM DETAIL AT VESTIBULE ENTRY CANOPY

SCALE: 1 1/2" = 1'-0"

A DESIGN STUDIO

MAIN CONTACT
Gracia Mueller
360.929.3077

CREATIVE
Brody Lund
425.359.7380

Additional information:
adesignstudioseattle.com

Follow us on social:
@adesignstudioseattle

COPYRIGHT
All artwork contained herein is the copyrighted property of A Design Studio Seattle. This includes, but is not limited to, logos, specifications, artwork and engineering. Any usage beyond internal reviews shall require our appoval and a separate design fee paid to A Design Studio Seattle. Usage rights can also be purchased (limited or complete) for an additional fee. Any unlawful distribution of said artwork is a violation of federal copyright laws.

PROJECT NAME
Terrace Station

PROJECT #
20-004

ADDRESS
24000 Van Ry Blvd
Mountlake Terrace, WA 98043

DATE
08/05/20

VERSION NOTES

V1	07/14 Concept design
V2	07/31 Revise signs
V3	08/06 Revise signs
V4	08/22 Revise signs
V5	10/02 Revise signs
V6	11/19 Revise signs
V7	01/02 Revise signs
V8	02/20 Revise all concepts & signs
V9	02/24 Revise signs
V10	03/19 Add signs, revise narrative
V11	05/19 Add/revise signs, revise all B3
V12	05/22 Revise B3 & directional signs
V13	06/02 Revise B1 canopy details
V14	08/05 Revise per city comments
V15	

PAGE SCALE
1 1/2" = 1'-0"

PAGE #
61

B1-S12 - ATTACHMENT DETAILS

Glass to be installed AFTER knife plates: openings cut into glass to accomodate knife plates.

CANOPY 28A PLAN VIEW

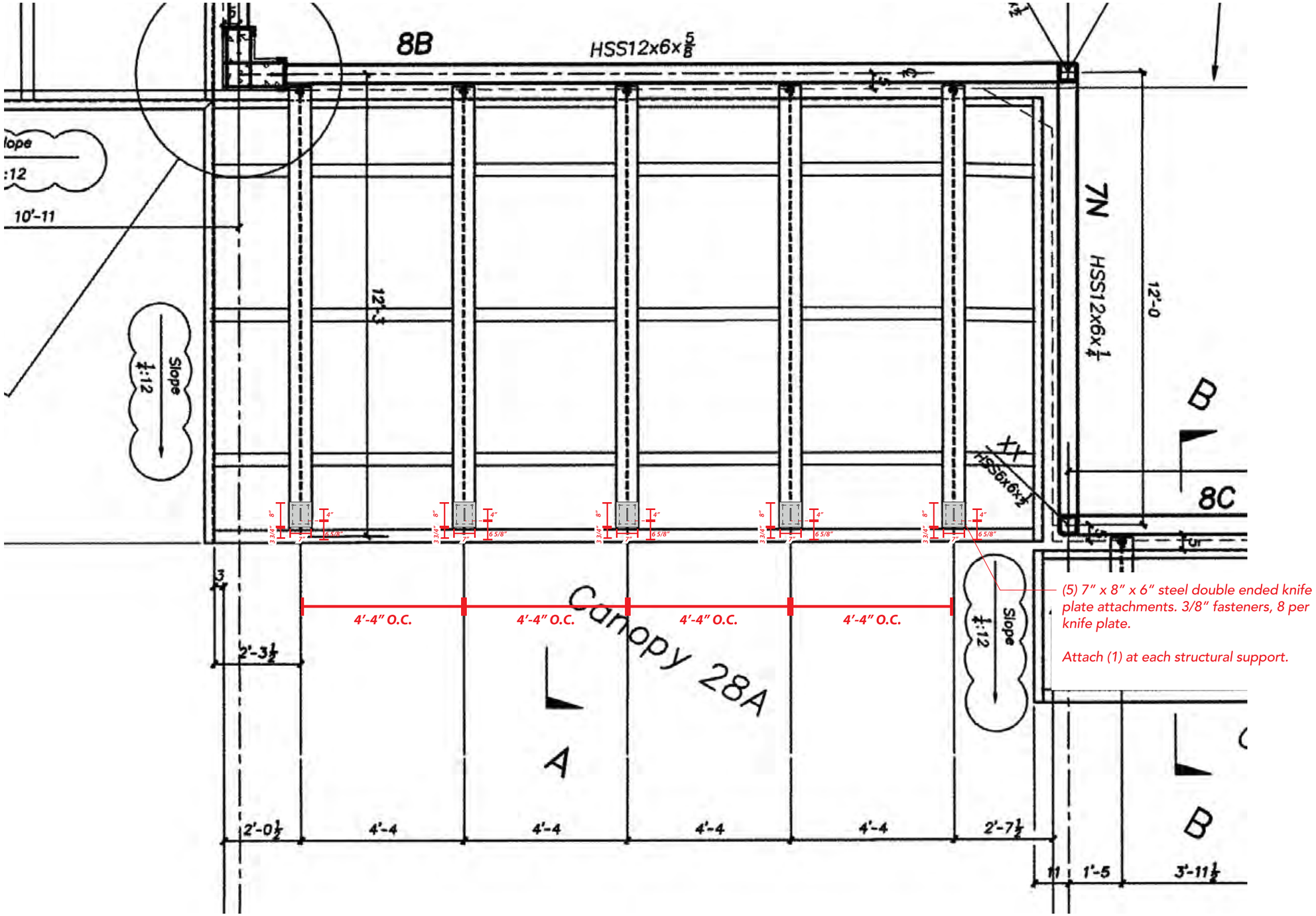

A DESIGN STUDIO

MAIN CONTACT
Gracia Mueller
360.929.3077

CREATIVE
Brody Lund
425.359.7380

Additional information:
adesignstudioseattle.com

Follow us on social:
@adesignstudioseattle

COPYRIGHT
All artwork contained herein is the copyrighted property of A Design Studio Seattle. This includes, but is not limited to, logos, specifications, artwork and engineering. Any usage beyond internal reviews shall require our appoval and a separate design fee paid to A Design Studio Seattle. Usage rights can also be purchased (limited or complete) for an additional fee. Any unlawful distribution of said artwork is a violation of federal copyright laws.

PROJECT NAME
Terrace Station

PROJECT #
20-004

ADDRESS
24000 Van Ry Blvd
Mountlake Terrace, WA 98043

DATE
08/05/20

VERSION NOTES

V1	07/14 Concept design
V2	07/31 Revise signs
V3	08/06 Revise signs
V4	08/22 Revise signs
V5	10/02 Revise signs
V6	11/19 Revise signs
V7	01/02 Revise signs
V8	02/20 Revise all concepts & signs
V9	02/24 Revise signs
V10	03/19 Add signs, revise narrative
V11	05/19 Add/revise signs, revise all B3
V12	05/22 Revise B3 & directional signs
V13	06/02 Revise B1 canopy details
V14	08/05 Revise per city comments
V15	

PAGE SCALE
3/8" = 1'-0"

PAGE #

B1-S12 - ATTACHMENT DETAILS

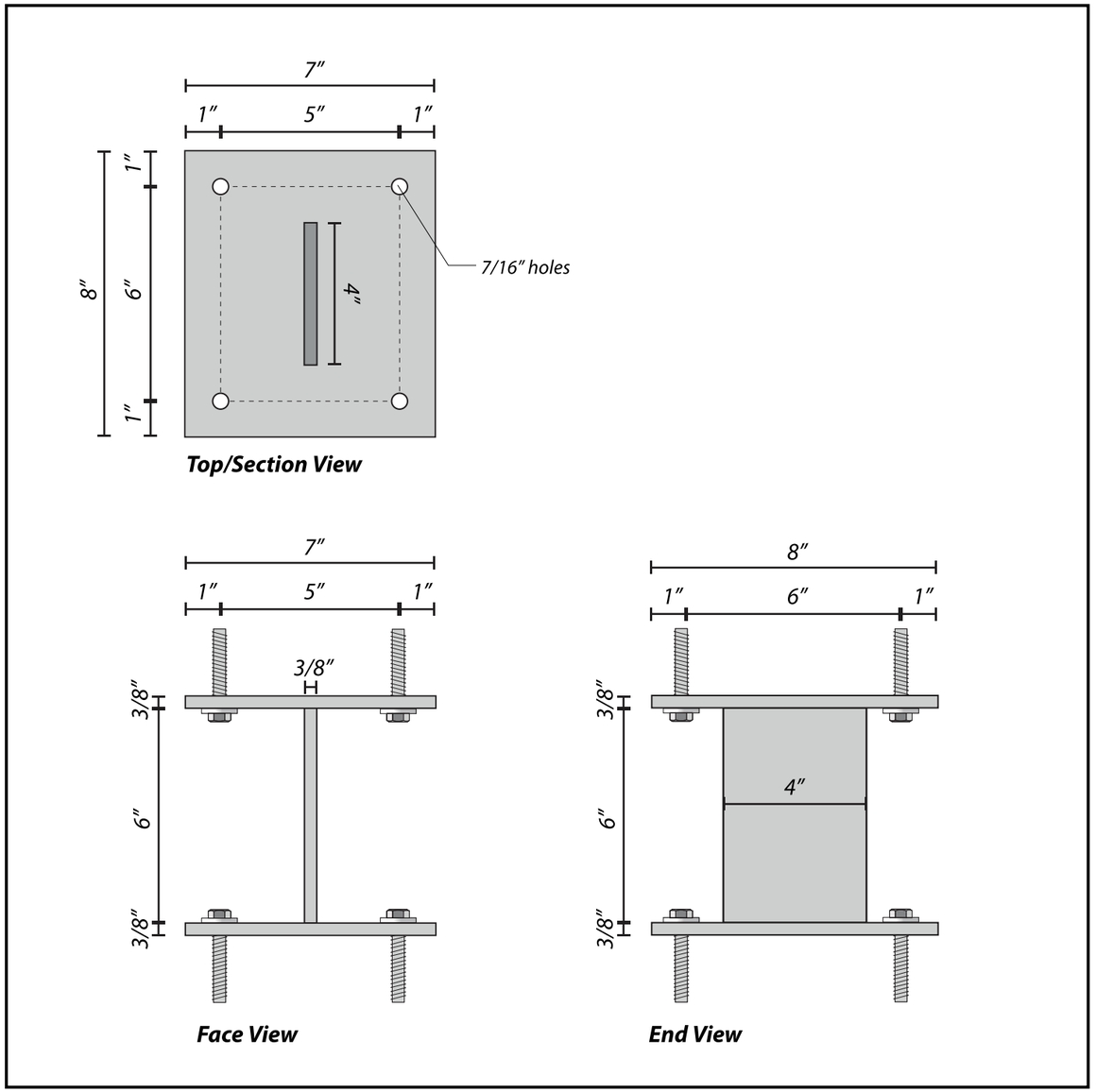

3/8″ x 7″ x 8″ Steel Double Ended Knife Plate Detail

Scale: 3″=1'-0″

A DESIGN STUDIO

MAIN CONTACT
Gracia Mueller
360.929.3077

CREATIVE
Brody Lund
425.359.7380

Additional information:
adesignstudioseattle.com

Follow us on social:
@adesignstudioseattle

COPYRIGHT
All artwork contained herein is the copyrighted property of A Design Studio Seattle. This includes, but is not limited to, logos, specifications, artwork and engineering. Any usage beyond internal reviews shall require our appoval and a separate design fee paid to A Design Studio Seattle. Usage rights can also be purchased (limited or complete) for an additional fee. Any unlawful distribution of said artwork is a violation of federal copyright laws.

PROJECT NAME
Terrace Station

PROJECT #
20-004

ADDRESS
24000 Van Ry Blvd
Mountlake Terrace, WA 98043

DATE
08/05/20

VERSION NOTES

V1	07/14 Concept design
V2	07/31 Revise signs
V3	08/06 Revise signs
V4	08/22 Revise signs
V5	10/02 Revise signs
V6	11/19 Revise signs
V7	01/02 Revise signs
V8	02/20 Revise all concepts & signs
V9	02/24 Revise signs
V10	03/19 Add signs, revise narrative
V11	05/19 Add/revise signs, revise all B3
V12	05/22 Revise B3 & directional signs
V13	06/02 Revise B1 canopy details
V14	08/05 Revise per city comments
V15	

PAGE SCALE
As Noted

PAGE #
63

B1-S13 - ELEVATIONS

Sign Area: 36.1 Square Feet

B1 Southeast Elevation - Covered Outdoor Plaza

A DESIGN STUDIO

MAIN CONTACT
Gracia Mueller
360.929.3077

CREATIVE
Brody Lund
425.359.7380

Additional information:
adesignstudioseattle.com

Follow us on social:
@adesignstudioseattle

COPYRIGHT
All artwork contained herein is the copyrighted property of A Design Studio Seattle. This includes, but is not limited to, logos, specifications, artwork and engineering. Any usage beyond internal reviews shall require our appoval and a separate design fee paid to A Design Studio Seattle. Usage rights can also be purchased (limited or complete) for an additional fee. Any unlawful distribution of said artwork is a violation of federal copyright laws.

PROJECT NAME
Terrace Station

PROJECT #
20-004

ADDRESS
24000 Van Ry Blvd
Mountlake Terrace, WA 98043

DATE
08/05/20

VERSION NOTES

V1	07/14 Concept design
V2	07/31 Revise signs
V3	08/06 Revise signs
V4	08/22 Revise signs
V5	10/02 Revise signs
V6	11/19 Revise signs
V7	01/02 Revise signs
V8	02/20 Revise all concepts & signs
V9	02/24 Revise signs
V10	03/19 Add signs, revise narrative
V11	05/19 Add/revise signs, revise all B3
V12	05/22 Revise B3 & directional signs
V13	06/02 Revise B1 canopy details
V14	08/05 Revise per city comments
V15	

PAGE SCALE
1/4" = 1'-0"

PAGE #

B1-S13 - ATTACHMENT DETAILS

Glass to be installed AFTER knife plates: openings cut into glass to accomodate knife plates.

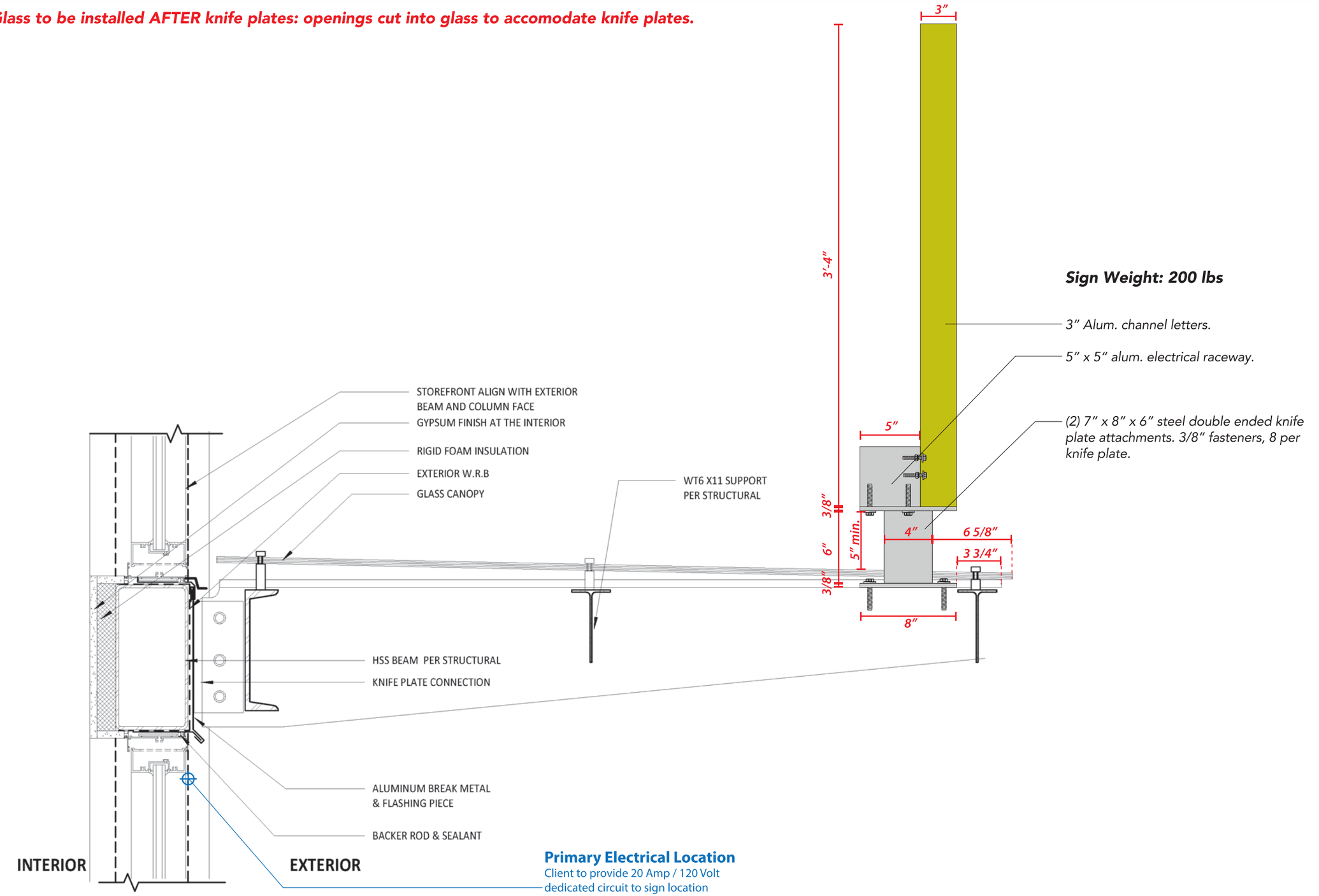

1 BEAM DETAIL AT VESTIBULE ENTRY CANOPY

SCALE: 1 1/2" = 1'-0"

A DESIGN STUDIO

MAIN CONTACT
Gracia Mueller
360.929.3077

CREATIVE
Brody Lund
425.359.7380

Additional information:
adesignstudioseattle.com

Follow us on social:
@adesignstudioseattle

COPYRIGHT
All artwork contained herein is the copyrighted property of A Design Studio Seattle. This includes, but is not limited to, logos, specifications, artwork and engineering. Any usage beyond internal reviews shall require our appoval and a separate design fee paid to A Design Studio Seattle. Usage rights can also be purchased (limited or complete) for an additional fee. Any unlawful distribution of said artwork is a violation of federal copyright laws.

PROJECT NAME
Terrace Station

PROJECT #
20-004

ADDRESS
24000 Van Ry Blvd
Mountlake Terrace, WA 98043

DATE
08/05/20

VERSION NOTES

V1	07/14 Concept design
V2	07/31 Revise signs
V3	08/06 Revise signs
V4	08/22 Revise signs
V5	10/02 Revise signs
V6	11/19 Revise signs
V7	01/02 Revise signs
V8	02/20 Revise all concepts & signs
V9	02/24 Revise signs
V10	03/19 Add signs, revise narrative
V11	05/19 Add/revise signs, revise all B3
V12	05/22 Revise B3 & directional signs
V13	06/02 Revise B1 canopy details
V14	08/05 Revise per city comments
V15	

PAGE SCALE
1 1/2" = 1'-0"

PAGE #

B1-S13 - ATTACHMENT DETAILS

Glass to be installed AFTER knife plates: openings cut into glass to accomodate knife plates.

CANOPY 27A PLAN VIEW

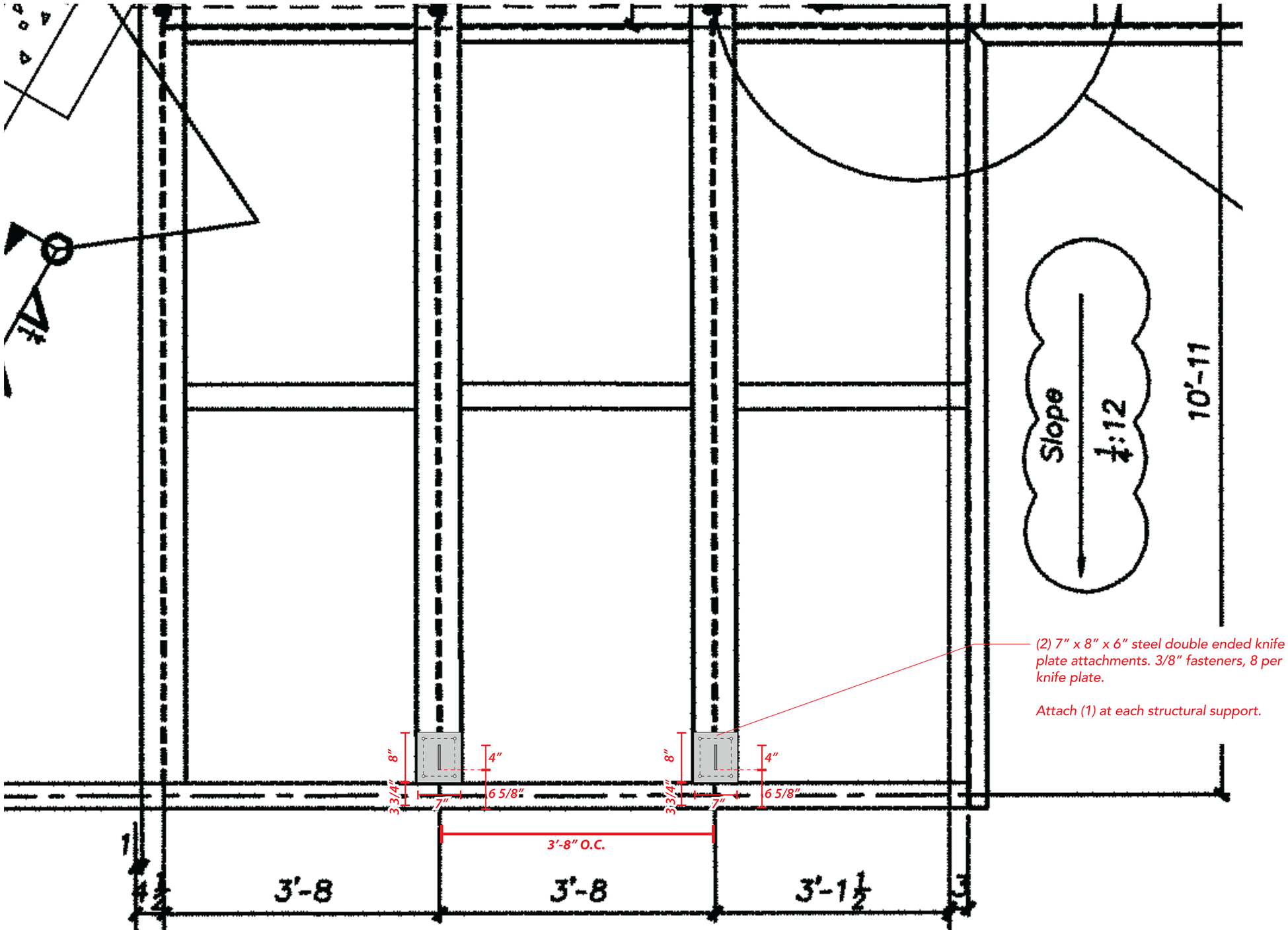

A DESIGN STUDIO

MAIN CONTACT
Gracia Mueller
360.929.3077

CREATIVE
Brody Lund
425.359.7380

Additional information:
adesignstudioseattle.com

Follow us on social:
@adesignstudioseattle

COPYRIGHT
All artwork contained herein is the copyrighted property of A Design Studio Seattle. This includes, but is not limited to, logos, specifications, artwork and engineering. Any usage beyond internal reviews shall require our appoval and a separate design fee paid to A Design Studio Seattle. Usage rights can also be purchased (limited or complete) for an additional fee. Any unlawful distribution of said artwork is a violation of federal copyright laws.

PROJECT NAME
Terrace Station

PROJECT #
20-004

ADDRESS
24000 Van Ry Blvd
Mountlake Terrace, WA 98043

DATE
08/05/20

VERSION NOTES

V1	07/14 Concept design
V2	07/31 Revise signs
V3	08/06 Revise signs
V4	08/22 Revise signs
V5	10/02 Revise signs
V6	11/19 Revise signs
V7	01/02 Revise signs
V8	02/20 Revise all concepts & signs
V9	02/24 Revise signs
V10	03/19 Add signs, revise narrative
V11	05/19 Add/revise signs, revise all B3
V12	05/22 Revise B3 & directional signs
V13	06/02 Revise B1 canopy details
V14	08/05 Revise per city comments
V15	

PAGE SCALE
3/4" = 1'-0"

PAGE #
66

B1-S13 - ATTACHMENT DETAILS

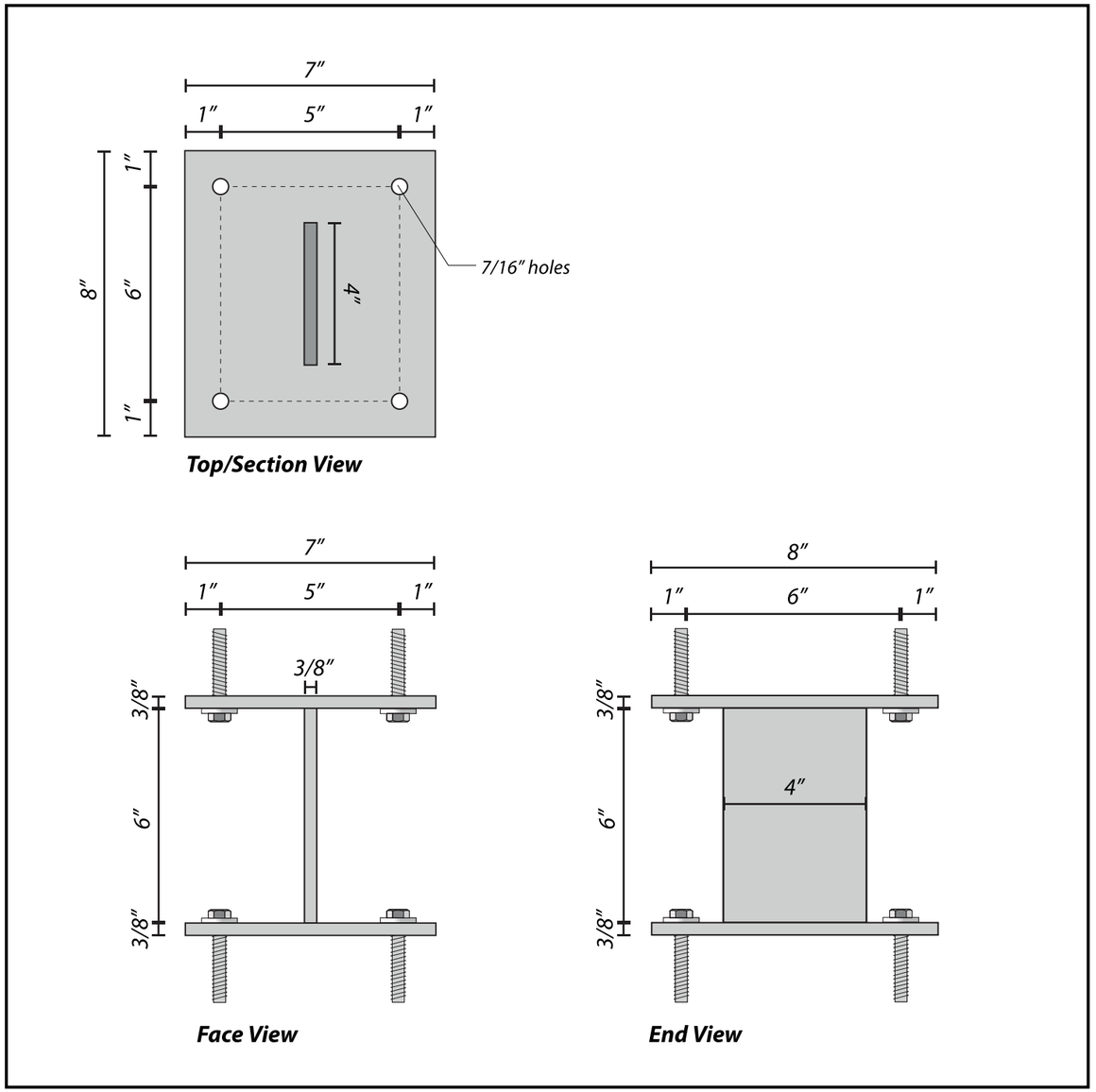

3/8″ x 7″ x 8″ Steel Double Ended Knife Plate Detail

Scale: 3″=1′-0″

A DESIGN STUDIO

MAIN CONTACT
Gracia Mueller
360.929.3077

CREATIVE
Brody Lund
425.359.7380

Additional information:
adesignstudioseattle.com

Follow us on social:
@adesignstudioseattle

COPYRIGHT
All artwork contained herein is the copyrighted property of A Design Studio Seattle. This includes, but is not limited to, logos, specifications, artwork and engineering. Any usage beyond internal reviews shall require our appoval and a separate design fee paid to A Design Studio Seattle. Usage rights can also be purchased (limited or complete) for an additional fee. Any unlawful distribution of said artwork is a violation of federal copyright laws.

PROJECT NAME
Terrace Station

PROJECT #
20-004

ADDRESS
24000 Van Ry Blvd
Mountlake Terrace, WA 98043

DATE
08/05/20

VERSION NOTES

V1	07/14 Concept design
V2	07/31 Revise signs
V3	08/06 Revise signs
V4	08/22 Revise signs
V5	10/02 Revise signs
V6	11/19 Revise signs
V7	01/02 Revise signs
V8	02/20 Revise all concepts & signs
V9	02/24 Revise signs
V10	03/19 Add signs, revise narrative
V11	05/19 Add/revise signs, revise all B3
V12	05/22 Revise B3 & directional signs
V13	06/02 Revise B1 canopy details
V14	08/05 Revise per city comments
V15	

PAGE SCALE
As Noted

PAGE #

B1-S14 - ELEVATIONS

Sign Area: 40.0 Square Feet

B1 East Elevation

A DESIGN STUDIO

MAIN CONTACT
Gracia Mueller
360.929.3077

CREATIVE
Brody Lund
425.359.7380

Additional information:
adesignstudioseattle.com

Follow us on social:
@adesignstudioseattle

COPYRIGHT
All artwork contained herein is the copyrighted property of A Design Studio Seattle. This includes, but is not limited to, logos, specifications, artwork and engineering. Any usage beyond internal reviews shall require our appoval and a separate design fee paid to A Design Studio Seattle. Usage rights can also be purchased (limited or complete) for an additional fee. Any unlawful distribution of said artwork is a violation of federal copyright laws.

PROJECT NAME
Terrace Station

PROJECT #
20-004

ADDRESS
24000 Van Ry Blvd
Mountlake Terrace, WA 98043

DATE
08/05/20

VERSION NOTES

V1	07/14 Concept design
V2	07/31 Revise signs
V3	08/06 Revise signs
V4	08/22 Revise signs
V5	10/02 Revise signs
V6	11/19 Revise signs
V7	01/02 Revise signs
V8	02/20 Revise all concepts & signs
V9	02/24 Revise signs
V10	03/19 Add signs, revise narrative
V11	05/19 Add/revise signs, revise all B3
V12	05/22 Revise B3 & directional signs
V13	06/02 Revise B1 canopy details
V14	08/05 Revise per city comments
V15	

PAGE SCALE
1/4" = 1'-0"

PAGE #
68

B1-S14 - ATTACHMENT DETAILS

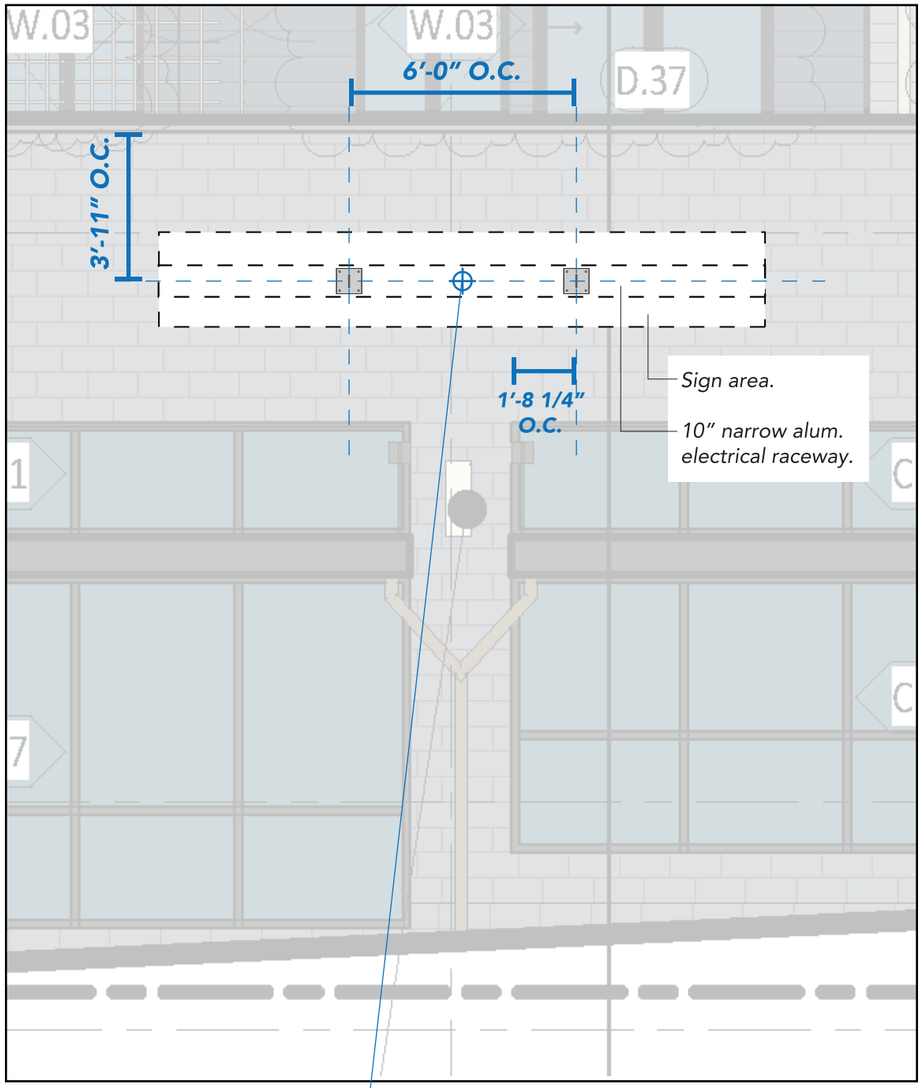

B1 East Elevation
Scale: 1/4"=1'-0"

Primary Electrical Location
Client to provide 20 Amp / 120 Volt dedicated circuit to sign location

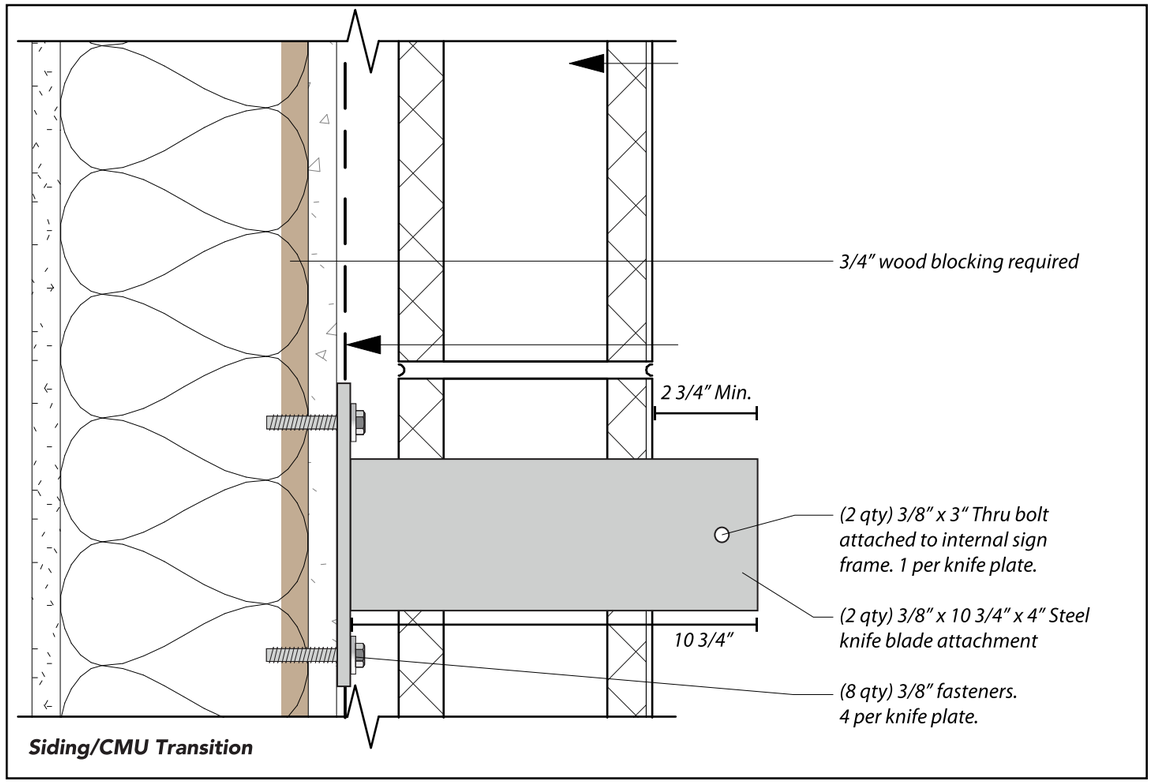

Knife Plate Install Detail
Scale: 3"=1'-0"

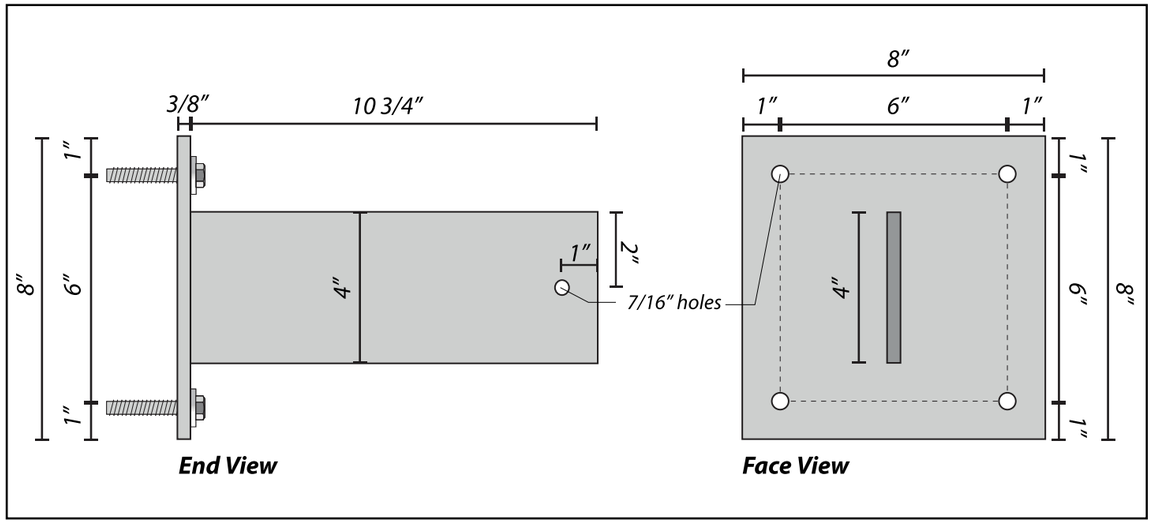

3/8" x 8" x 8" Steel Plate Detail
Scale: 3"=1'-0"

A DESIGN STUDIO

MAIN CONTACT
Gracia Mueller
360.929.3077

CREATIVE
Brody Lund
425.359.7380

Additional information:
adesignstudioseattle.com

Follow us on social:
@adesignstudioseattle

COPYRIGHT
All artwork contained herein is the copyrighted property of A Design Studio Seattle. This includes, but is not limited to, logos, specifications, artwork and engineering. Any usage beyond internal reviews shall require our appoval and a separate design fee paid to A Design Studio Seattle. Usage rights can also be purchased (limited or complete) for an additional fee. Any unlawful distribution of said artwork is a violation of federal copyright laws.

PROJECT NAME
Terrace Station

PROJECT #
20-004

ADDRESS
24000 Van Ry Blvd
Mountlake Terrace, WA 98043

DATE
08/05/20

VERSION NOTES

V1	07/14 Concept design
V2	07/31 Revise signs
V3	08/06 Revise signs
V4	08/22 Revise signs
V5	10/02 Revise signs
V6	11/19 Revise signs
V7	01/02 Revise signs
V8	02/20 Revise all concepts & signs
V9	02/24 Revise signs
V10	03/19 Add signs, revise narrative
V11	05/19 Add/revise signs, revise all B3
V12	05/22 Revise B3 & directional signs
V13	06/02 Revise B1 canopy details
V14	08/05 Revise per city comments
V15	

PAGE SCALE
As Noted

PAGE #

B1-S15 - ELEVATIONS

Sign Area: 40.0 Square Feet

B1 East Elevation

A DESIGN STUDIO

MAIN CONTACT
Gracia Mueller
360.929.3077

CREATIVE
Brody Lund
425.359.7380

Additional information:
adesignstudioseattle.com

Follow us on social:
@adesignstudioseattle

COPYRIGHT
All artwork contained herein is the copyrighted property of A Design Studio Seattle. This includes, but is not limited to, logos, specifications, artwork and engineering. Any usage beyond internal reviews shall require our appoval and a separate design fee paid to A Design Studio Seattle. Usage rights can also be purchased (limited or complete) for an additional fee. Any unlawful distribution of said artwork is a violation of federal copyright laws.

PROJECT NAME
Terrace Station

PROJECT #
20-004

ADDRESS
24000 Van Ry Blvd
Mountlake Terrace, WA 98043

DATE
08/05/20

VERSION NOTES

V1	07/14 Concept design
V2	07/31 Revise signs
V3	08/06 Revise signs
V4	08/22 Revise signs
V5	10/02 Revise signs
V6	11/19 Revise signs
V7	01/02 Revise signs
V8	02/20 Revise all concepts & signs
V9	02/24 Revise signs
V10	03/19 Add signs, revise narrative
V11	05/19 Add/revise signs, revise all B3
V12	05/22 Revise B3 & directional signs
V13	06/02 Revise B1 canopy details
V14	08/05 Revise per city comments
V15	

PAGE SCALE
1/4" = 1'-0"

PAGE #

B1-S15 - ATTACHMENT DETAILS

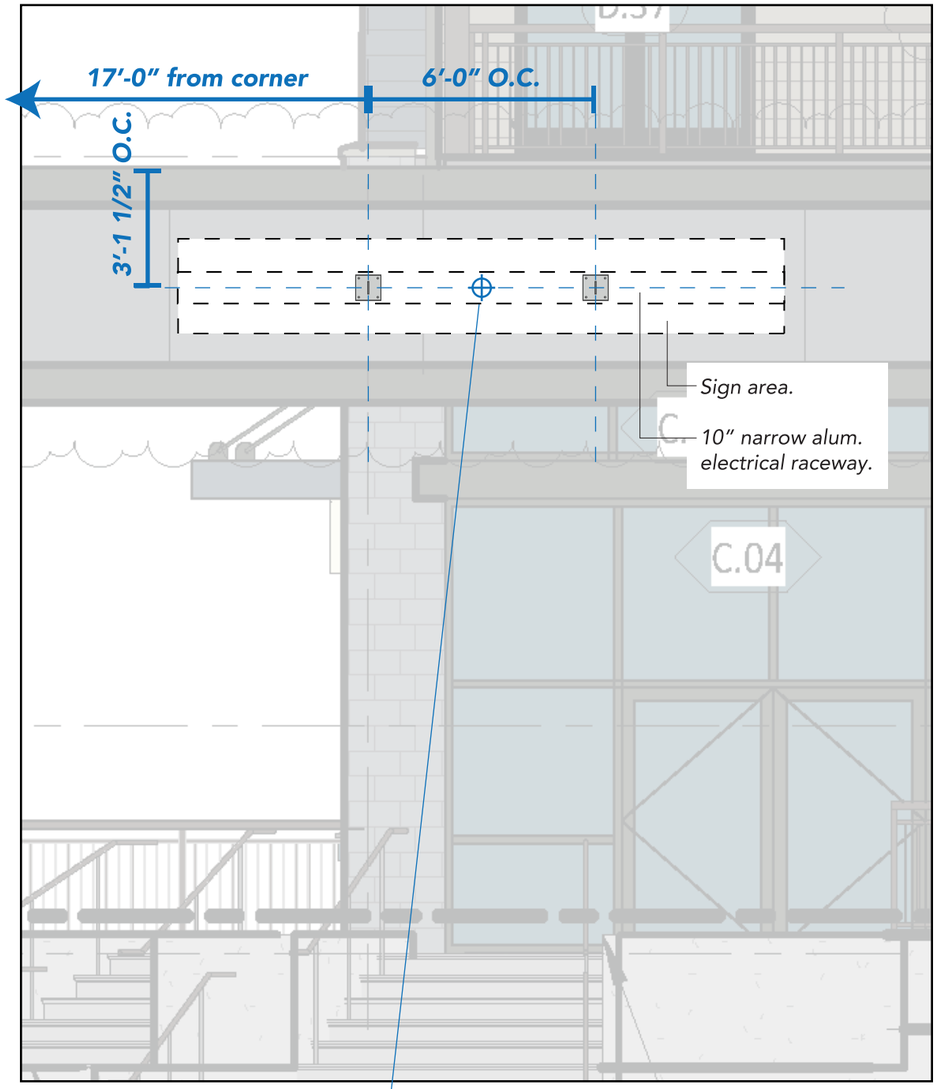

B1 East Elevation
Scale: 1/4"=1'-0"

Primary Electrical Location
Client to provide 20 Amp / 120 Volt dedicated circuit to sign location

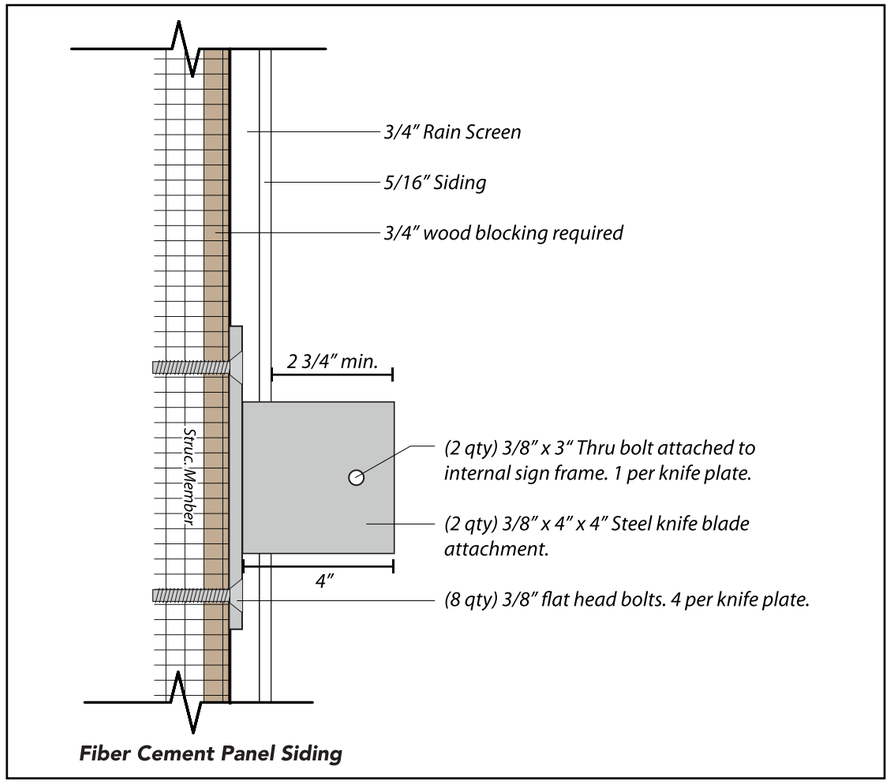

Knife Plate Install Detail
Scale: 3"=1'-0"

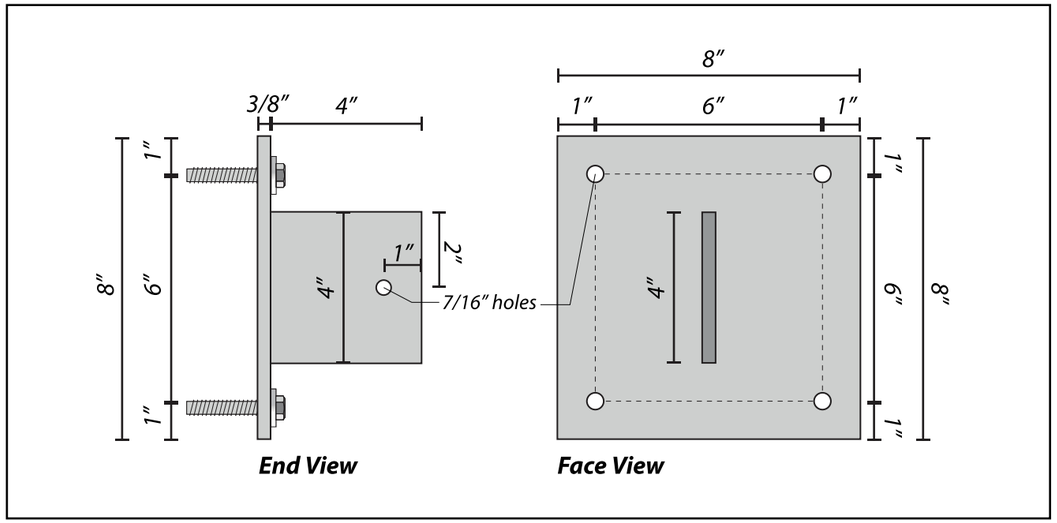

3/8" x 8" x 8" Steel Plate Detail
Scale: 3"=1'-0"

A DESIGN STUDIO

MAIN CONTACT
Gracia Mueller
360.929.3077

CREATIVE
Brody Lund
425.359.7380

Additional information:
adesignstudioseattle.com

Follow us on social:
@adesignstudioseattle

COPYRIGHT
All artwork contained herein is the copyrighted property of A Design Studio Seattle. This includes, but is not limited to, logos, specifications, artwork and engineering. Any usage beyond internal reviews shall require our appoval and a separate design fee paid to A Design Studio Seattle. Usage rights can also be purchased (limited or complete) for an additional fee. Any unlawful distribution of said artwork is a violation of federal copyright laws.

PROJECT NAME
Terrace Station

PROJECT #
20-004

ADDRESS
24000 Van Ry Blvd
Mountlake Terrace, WA 98043

DATE
08/05/20

VERSION NOTES

V1	07/14 Concept design
V2	07/31 Revise signs
V3	08/06 Revise signs
V4	08/22 Revise signs
V5	10/02 Revise signs
V6	11/19 Revise signs
V7	01/02 Revise signs
V8	02/20 Revise all concepts & signs
V9	02/24 Revise signs
V10	03/19 Add signs, revise narrative
V11	05/19 Add/revise signs, revise all B3
V12	05/22 Revise B3 & directional signs
V13	06/02 Revise B1 canopy details
V14	08/05 Revise per city comments
V15	

PAGE SCALE
As Noted

PAGE #

B1-S16 - ELEVATIONS

Sign Area: 40.0 Square Feet

B1 South Elevation

A DESIGN STUDIO

MAIN CONTACT
Gracia Mueller
360.929.3077

CREATIVE
Brody Lund
425.359.7380

Additional information:
adesignstudioseattle.com

Follow us on social:
@adesignstudioseattle

COPYRIGHT
All artwork contained herein is the copyrighted property of A Design Studio Seattle. This includes, but is not limited to, logos, specifications, artwork and engineering. Any usage beyond internal reviews shall require our appoval and a separate design fee paid to A Design Studio Seattle. Usage rights can also be purchased (limited or complete) for an additional fee. Any unlawful distribution of said artwork is a violation of federal copyright laws.

PROJECT NAME
Terrace Station

PROJECT #
20-004

ADDRESS
24000 Van Ry Blvd
Mountlake Terrace, WA 98043

DATE
08/05/20

VERSION NOTES

V1	07/14 Concept design
V2	07/31 Revise signs
V3	08/06 Revise signs
V4	08/22 Revise signs
V5	10/02 Revise signs
V6	11/19 Revise signs
V7	01/02 Revise signs
V8	02/20 Revise all concepts & signs
V9	02/24 Revise signs
V10	03/19 Add signs, revise narrative
V11	05/19 Add/revise signs, revise all B3
V12	05/22 Revise B3 & directional signs
V13	06/02 Revise B1 canopy details
V14	08/05 Revise per city comments
V15	

PAGE SCALE
1/4" = 1'-0"

PAGE #

B1-S16 - ATTACHMENT DETAILS

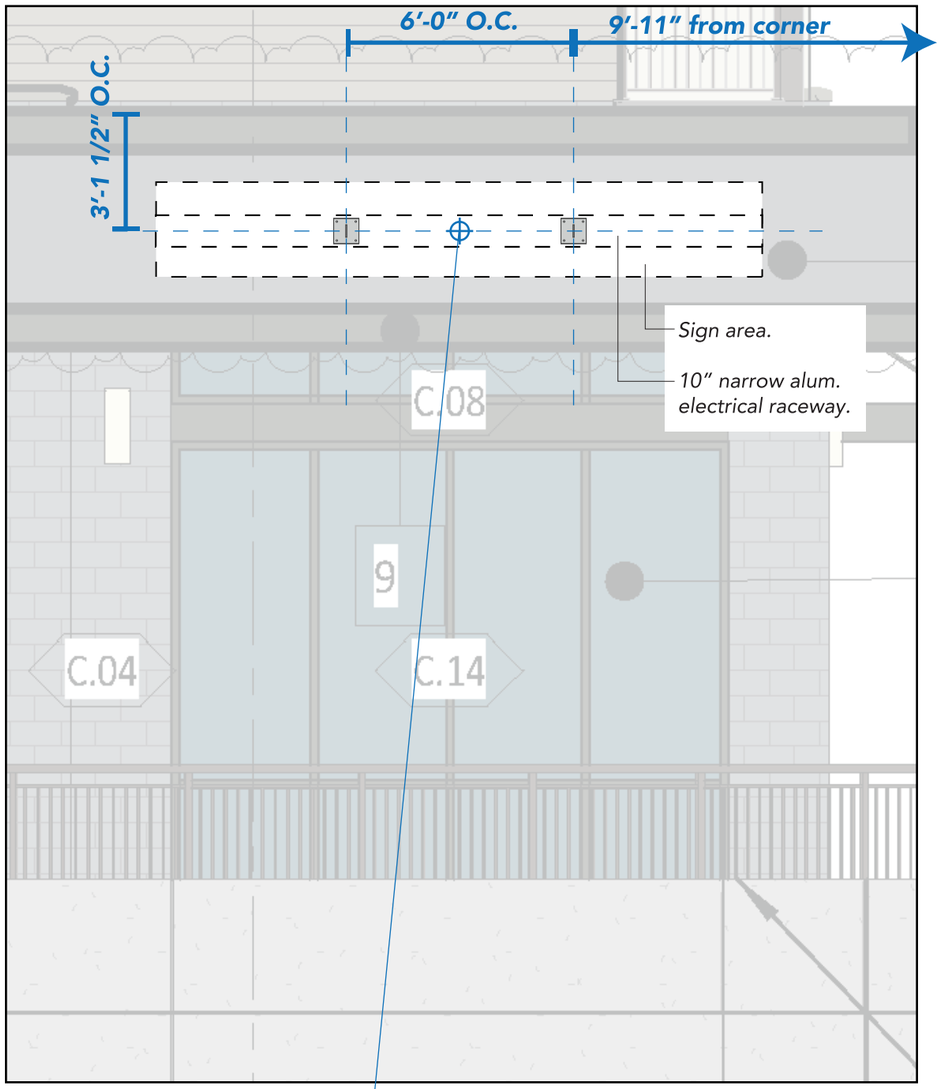

B1 South Elevation
Scale: 1/4"=1'-0"

Primary Electrical Location
Client to provide 20 Amp / 120 Volt dedicated circuit to sign location

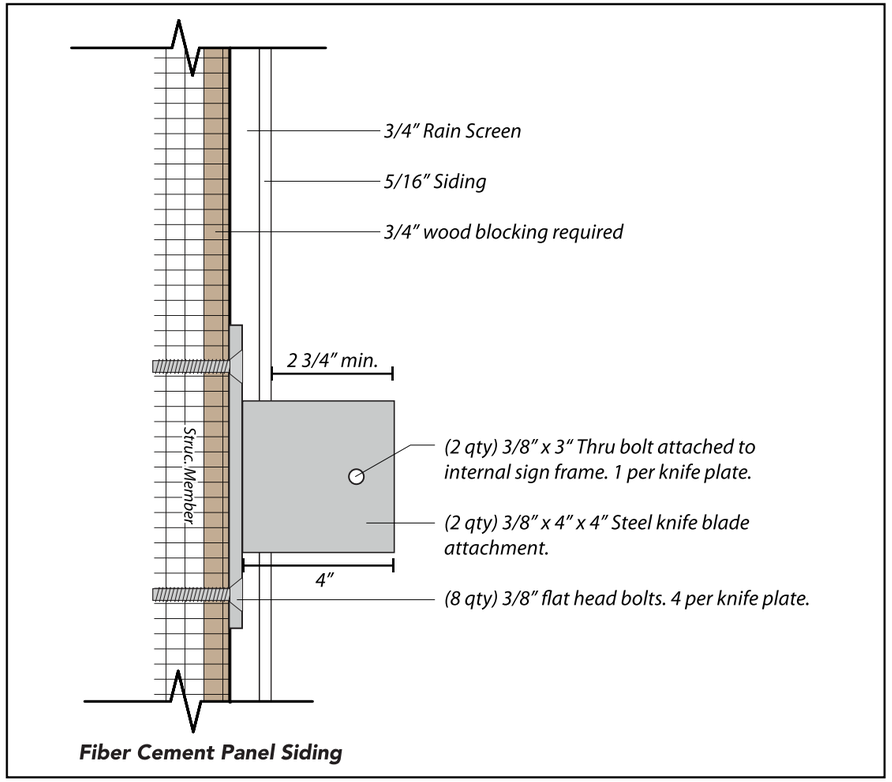

Knife Plate Install Detail
Scale: 3"=1'-0"

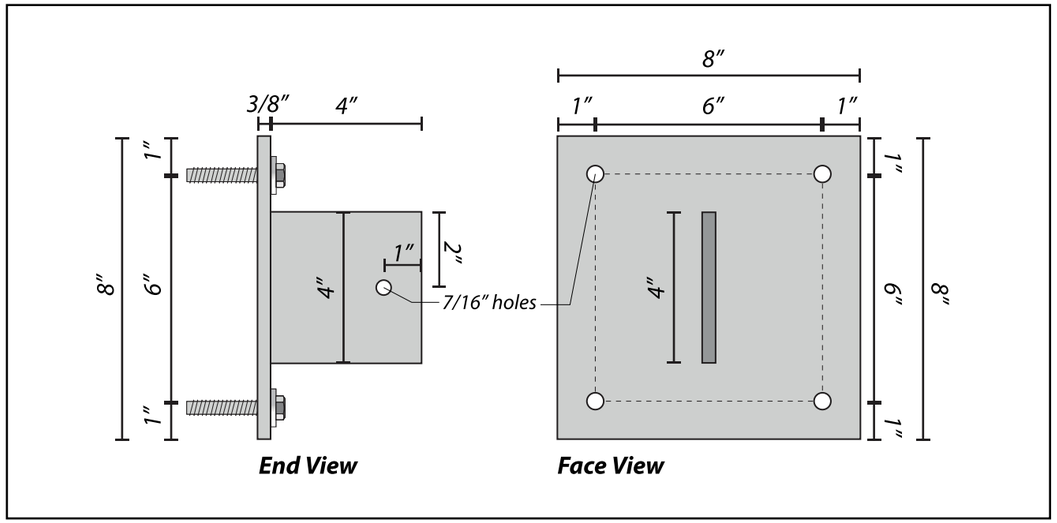

3/8" x 8" x 8" Steel Plate Detail
Scale: 3"=1'-0"

A DESIGN STUDIO

MAIN CONTACT
Gracia Mueller
360.929.3077

CREATIVE
Brody Lund
425.359.7380

Additional information:
adesignstudioseattle.com

Follow us on social:
@adesignstudioseattle

COPYRIGHT
All artwork contained herein is the copyrighted property of A Design Studio Seattle. This includes, but is not limited to, logos, specifications, artwork and engineering. Any usage beyond internal reviews shall require our appoval and a separate design fee paid to A Design Studio Seattle. Usage rights can also be purchased (limited or complete) for an additional fee. Any unlawful distribution of said artwork is a violation of federal copyright laws.

PROJECT NAME
Terrace Station

PROJECT #
20-004

ADDRESS
24000 Van Ry Blvd
Mountlake Terrace, WA 98043

DATE
08/05/20

VERSION NOTES

V1	07/14 Concept design
V2	07/31 Revise signs
V3	08/06 Revise signs
V4	08/22 Revise signs
V5	10/02 Revise signs
V6	11/19 Revise signs
V7	01/02 Revise signs
V8	02/20 Revise all concepts & signs
V9	02/24 Revise signs
V10	03/19 Add signs, revise narrative
V11	05/19 Add/revise signs, revise all B3
V12	05/22 Revise B3 & directional signs
V13	06/02 Revise B1 canopy details
V14	08/05 Revise per city comments
V15	

PAGE SCALE
As Noted

PAGE #

B1-S17 - ELEVATIONS

Sign Area: 40.0 Square Feet

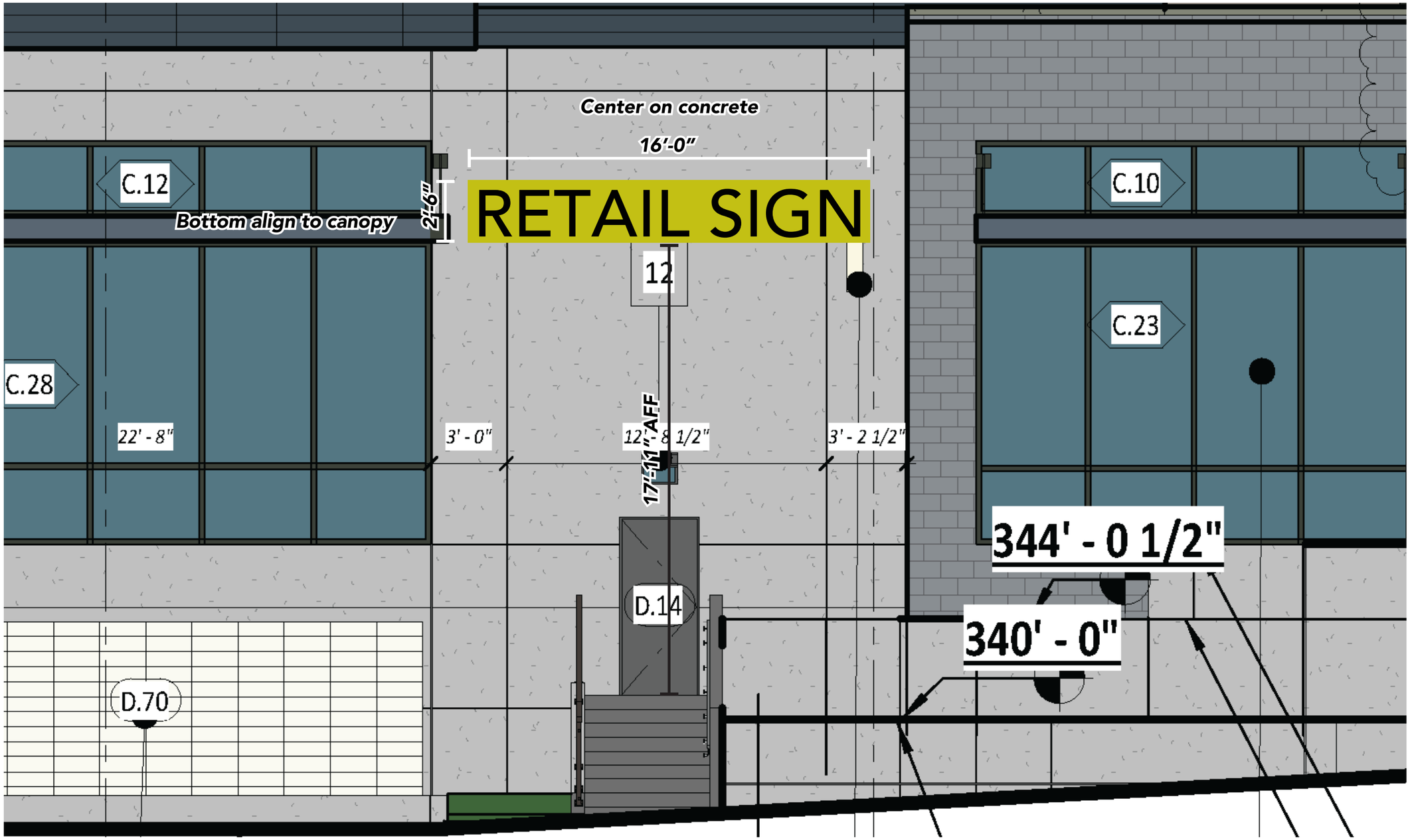

B1 South Elevation

A DESIGN STUDIO

MAIN CONTACT
Gracia Mueller
360.929.3077

CREATIVE
Brody Lund
425.359.7380

Additional information:
adesignstudioseattle.com

Follow us on social:
@adesignstudioseattle

COPYRIGHT
All artwork contained herein is the copyrighted property of A Design Studio Seattle. This includes, but is not limited to, logos, specifications, artwork and engineering. Any usage beyond internal reviews shall require our appoval and a separate design fee paid to A Design Studio Seattle. Usage rights can also be purchased (limited or complete) for an additional fee. Any unlawful distribution of said artwork is a violation of federal copyright laws.

PROJECT NAME
Terrace Station

PROJECT #
20-004

ADDRESS
24000 Van Ry Blvd
Mountlake Terrace, WA 98043

DATE
08/05/20

VERSION NOTES

V1	07/14 Concept design
V2	07/31 Revise signs
V3	08/06 Revise signs
V4	08/22 Revise signs
V5	10/02 Revise signs
V6	11/19 Revise signs
V7	01/02 Revise signs
V8	02/20 Revise all concepts & signs
V9	02/24 Revise signs
V10	03/19 Add signs, revise narrative
V11	05/19 Add/revise signs, revise all B3
V12	05/22 Revise B3 & directional signs
V13	06/02 Revise B1 canopy details
V14	08/05 Revise per city comments
V15	

PAGE SCALE
1/4" = 1'-0"

PAGE #

B1-S17 - ATTACHMENT DETAILS

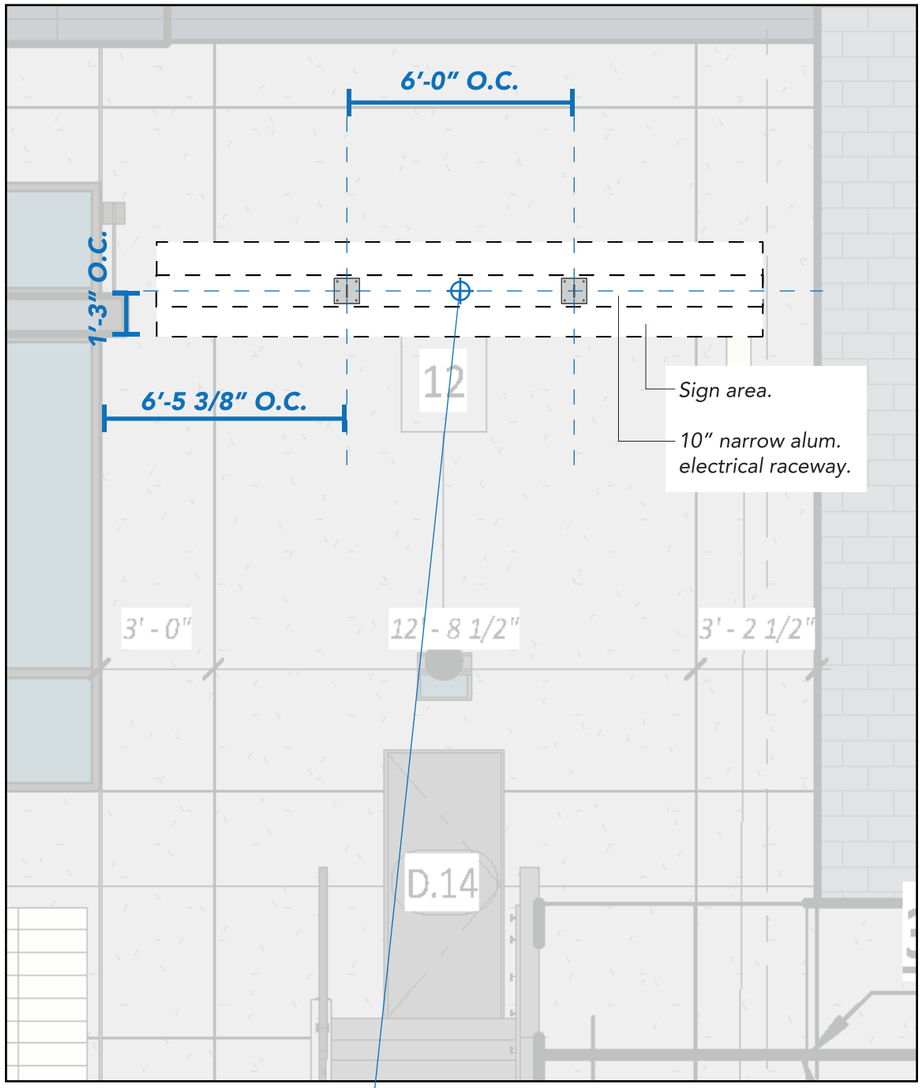

B1 South Elevation
Scale: 1/4"=1'-0"

Primary Electrical Location
Client to provide 20 Amp / 120 Volt dedicated circuit to sign location

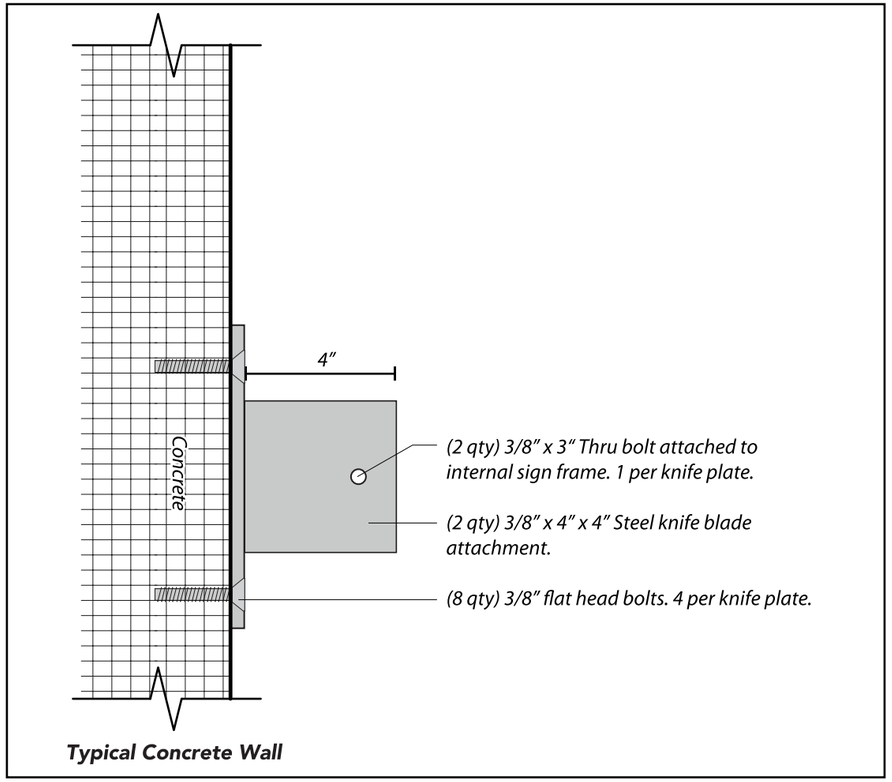

Knife Plate Install Detail
Scale: 3"=1'-0"

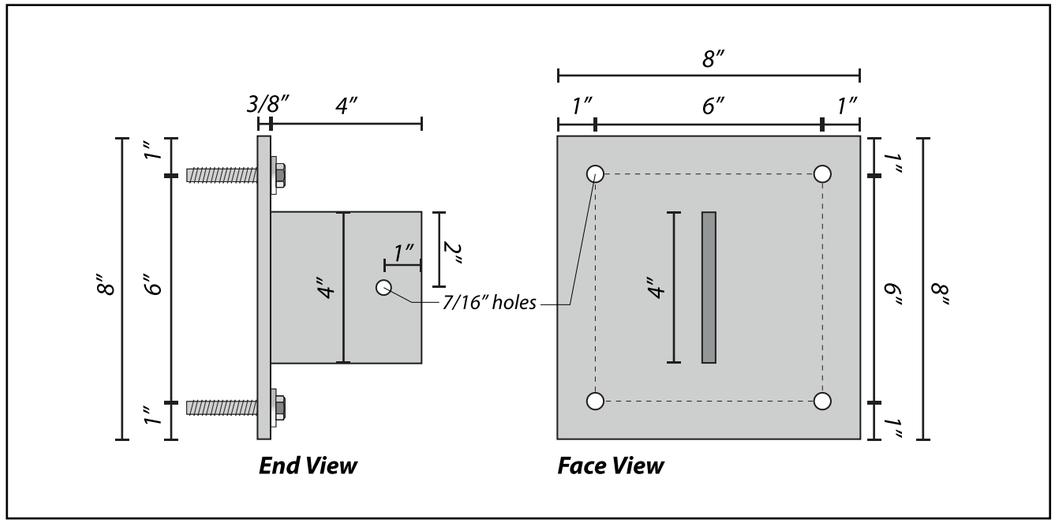

3/8" x 8" x 8" Steel Plate Detail
Scale: 3"=1'-0"

A DESIGN STUDIO

MAIN CONTACT
Gracia Mueller
360.929.3077

CREATIVE
Brody Lund
425.359.7380

Additional information:
adesignstudioseattle.com

Follow us on social:
@adesignstudioseattle

COPYRIGHT
All artwork contained herein is the copyrighted property of A Design Studio Seattle. This includes, but is not limited to, logos, specifications, artwork and engineering. Any usage beyond internal reviews shall require our appoval and a separate design fee paid to A Design Studio Seattle. Usage rights can also be purchased (limited or complete) for an additional fee. Any unlawful distribution of said artwork is a violation of federal copyright laws.

PROJECT NAME
Terrace Station

PROJECT #
20-004

ADDRESS
24000 Van Ry Blvd
Mountlake Terrace, WA 98043

DATE
08/05/20

VERSION NOTES

V1	07/14 Concept design
V2	07/31 Revise signs
V3	08/06 Revise signs
V4	08/22 Revise signs
V5	10/02 Revise signs
V6	11/19 Revise signs
V7	01/02 Revise signs
V8	02/20 Revise all concepts & signs
V9	02/24 Revise signs
V10	03/19 Add signs, revise narrative
V11	05/19 Add/revise signs, revise all B3
V12	05/22 Revise B3 & directional signs
V13	06/02 Revise B1 canopy details
V14	08/05 Revise per city comments
V15	

PAGE SCALE
As Noted

PAGE #

B1-S18 - ELEVATIONS

Sign Area: 40.0 Square Feet

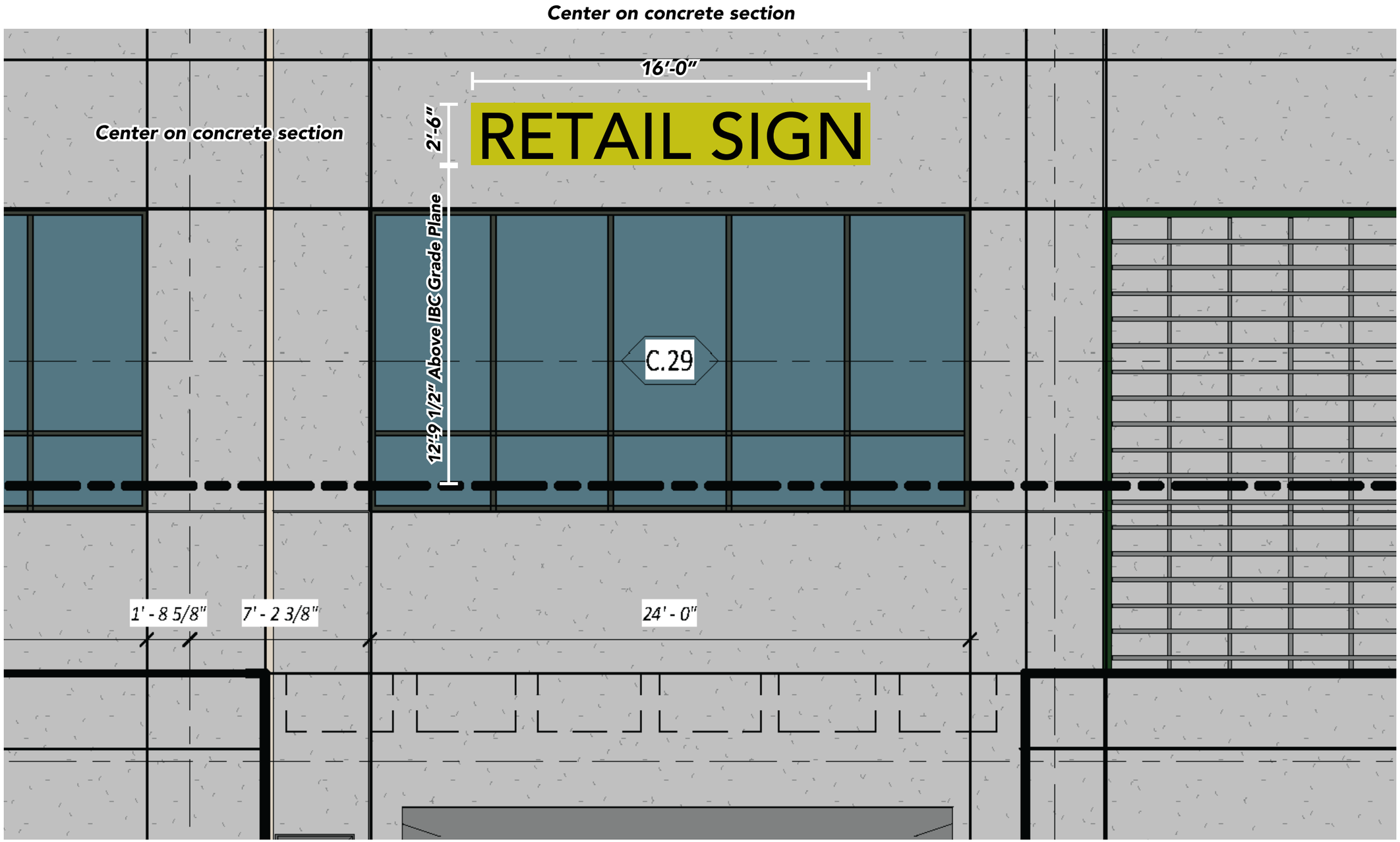

B1 West Elevation

A DESIGN STUDIO

MAIN CONTACT
Gracia Mueller
360.929.3077

CREATIVE
Brody Lund
425.359.7380

Additional information:
adesignstudioseattle.com

Follow us on social:
@adesignstudioseattle

COPYRIGHT
All artwork contained herein is the copyrighted property of A Design Studio Seattle. This includes, but is not limited to, logos, specifications, artwork and engineering. Any usage beyond internal reviews shall require our appoval and a separate design fee paid to A Design Studio Seattle. Usage rights can also be purchased (limited or complete) for an additional fee. Any unlawful distribution of said artwork is a violation of federal copyright laws.

PROJECT NAME
Terrace Station

PROJECT #
20-004

ADDRESS
24000 Van Ry Blvd
Mountlake Terrace, WA 98043

DATE
08/05/20

VERSION NOTES

V1	07/14 Concept design
V2	07/31 Revise signs
V3	08/06 Revise signs
V4	08/22 Revise signs
V5	10/02 Revise signs
V6	11/19 Revise signs
V7	01/02 Revise signs
V8	02/20 Revise all concepts & signs
V9	02/24 Revise signs
V10	03/19 Add signs, revise narrative
V11	05/19 Add/revise signs, revise all B3
V12	05/22 Revise B3 & directional signs
V13	06/02 Revise B1 canopy details
V14	08/05 Revise per city comments
V15	

PAGE SCALE
1/4" = 1'-0"

PAGE #

B1-S18 - ATTACHMENT DETAILS

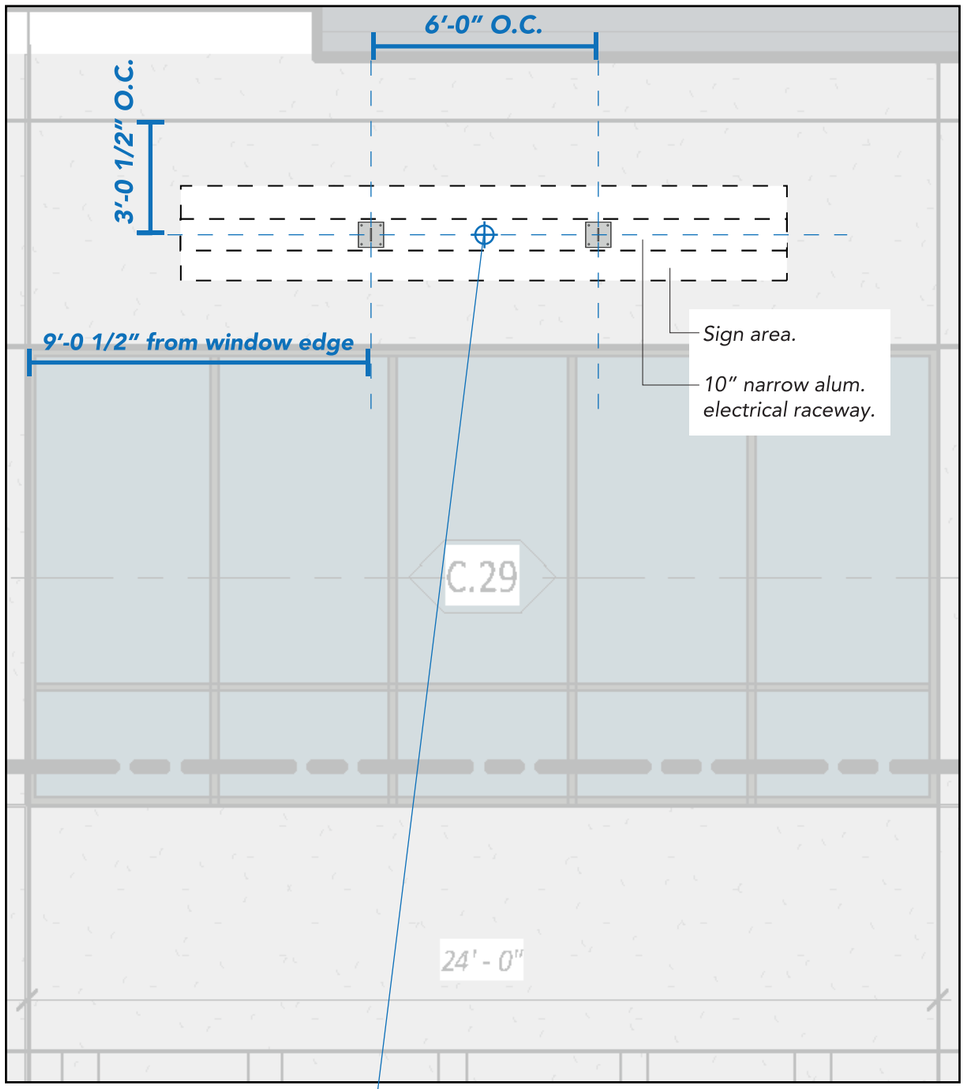

B1 West Elevation
Scale: 1/4"=1'-0"

Primary Electrical Location
Client to provide 20 Amp / 120 Volt dedicated circuit to sign location

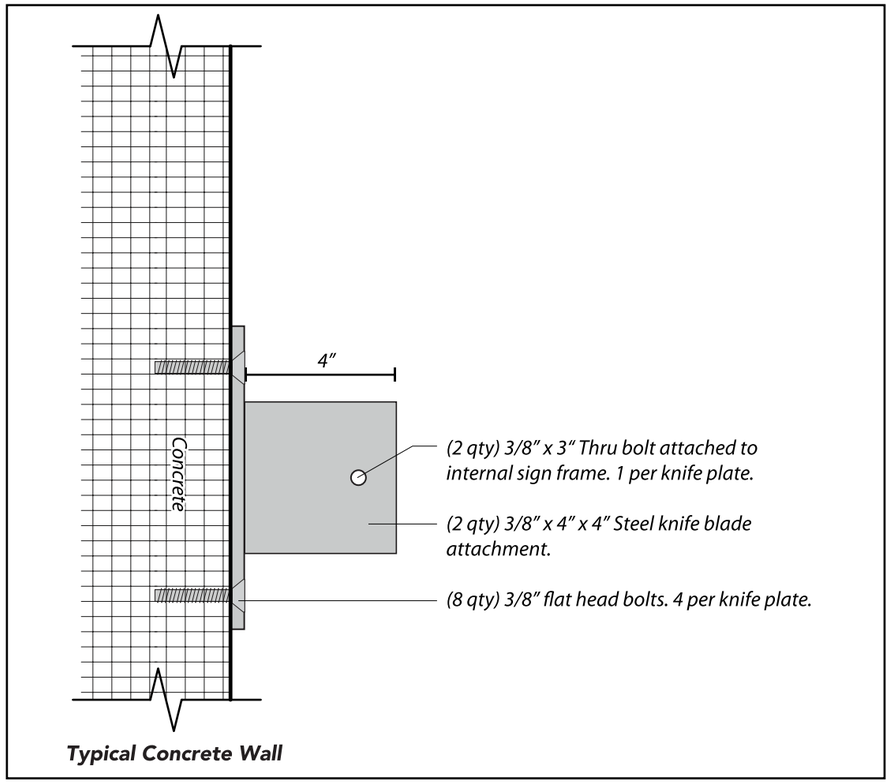

Knife Plate Install Detail
Scale: 3"=1'-0"

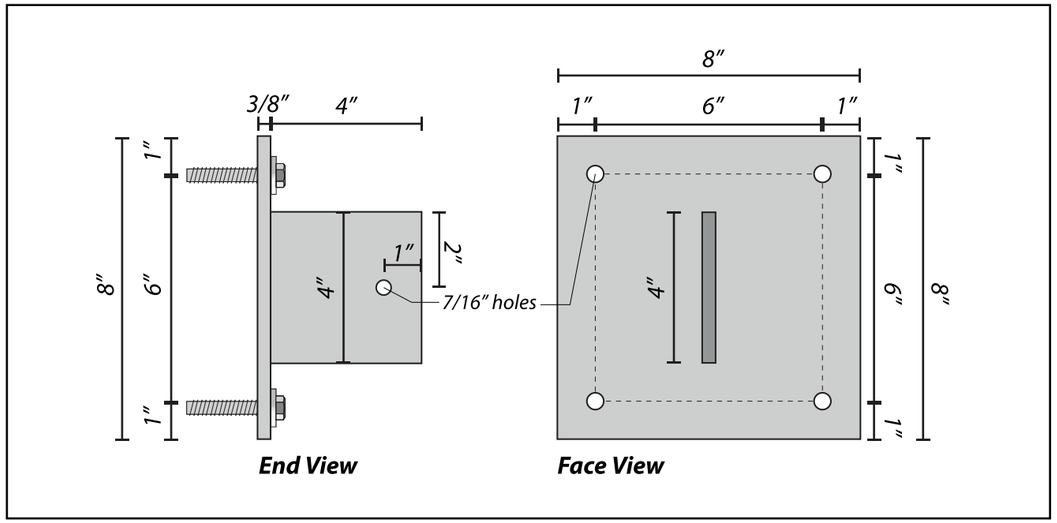

3/8" x 8" x 8" Steel Plate Detail
Scale: 3"=1'-0"

A DESIGN STUDIO

MAIN CONTACT
Gracia Mueller
360.929.3077

CREATIVE
Brody Lund
425.359.7380

Additional information:
adesignstudioseattle.com

Follow us on social:
@adesignstudioseattle

COPYRIGHT
All artwork contained herein is the copyrighted property of A Design Studio Seattle. This includes, but is not limited to, logos, specifications, artwork and engineering. Any usage beyond internal reviews shall require our appoval and a separate design fee paid to A Design Studio Seattle. Usage rights can also be purchased (limited or complete) for an additional fee. Any unlawful distribution of said artwork is a violation of federal copyright laws.

PROJECT NAME
Terrace Station

PROJECT #
20-004

ADDRESS
24000 Van Ry Blvd
Mountlake Terrace, WA 98043

DATE
08/05/20

VERSION NOTES

V1	07/14 Concept design
V2	07/31 Revise signs
V3	08/06 Revise signs
V4	08/22 Revise signs
V5	10/02 Revise signs
V6	11/19 Revise signs
V7	01/02 Revise signs
V8	02/20 Revise all concepts & signs
V9	02/24 Revise signs
V10	03/19 Add signs, revise narrative
V11	05/19 Add/revise signs, revise all B3
V12	05/22 Revise B3 & directional signs
V13	06/02 Revise B1 canopy details
V14	08/05 Revise per city comments
V15	

PAGE SCALE
As Noted

PAGE #
77

B1-S19 - ELEVATIONS

Sign Area: 40.0 Square Feet

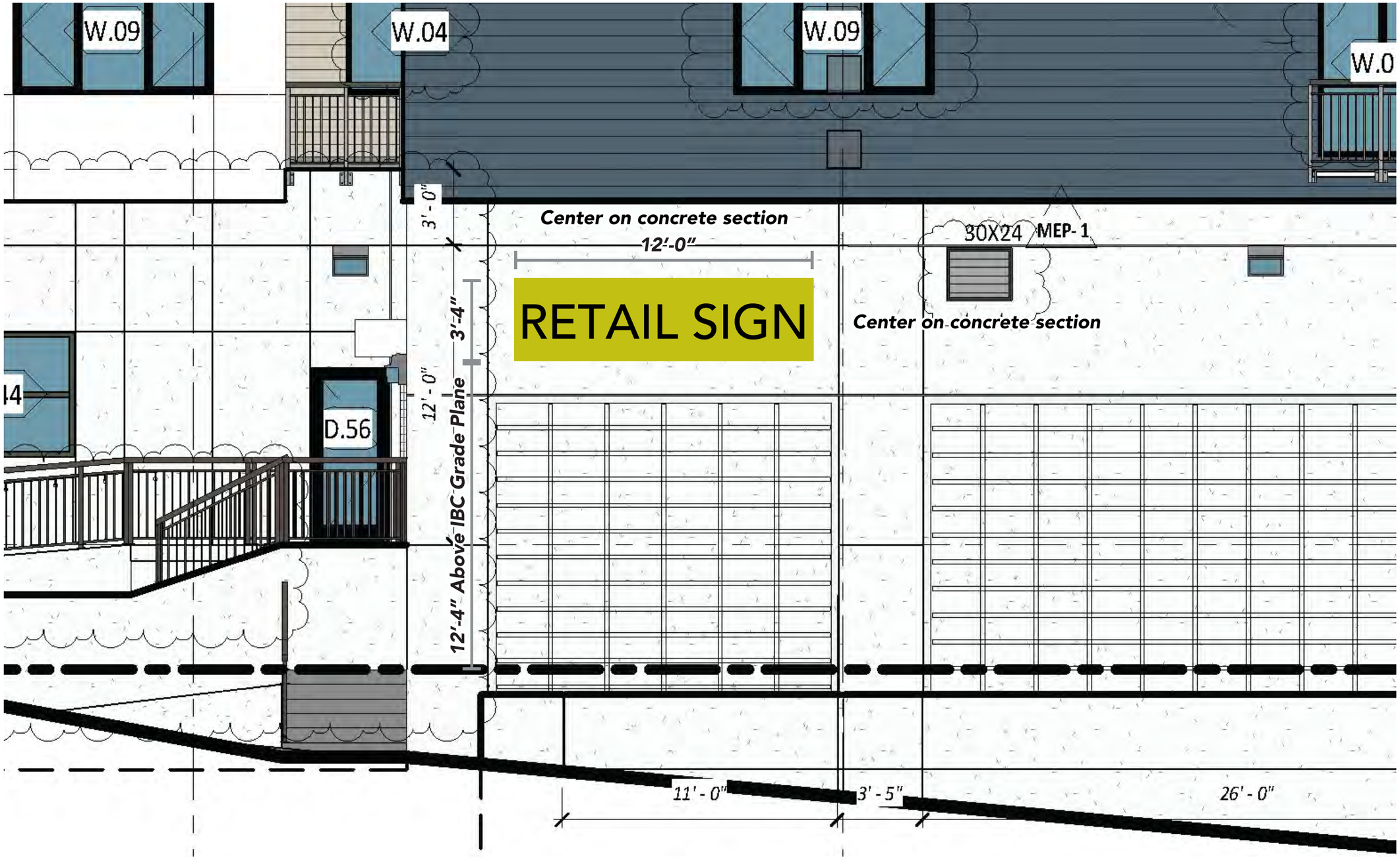

B1 West Elevation

A DESIGN STUDIO

MAIN CONTACT
Gracia Mueller
360.929.3077

CREATIVE
Brody Lund
425.359.7380

Additional information:
adesignstudioseattle.com

Follow us on social:
@adesignstudioseattle

COPYRIGHT
All artwork contained herein is the copyrighted property of A Design Studio Seattle. This includes, but is not limited to, logos, specifications, artwork and engineering. Any usage beyond internal reviews shall require our appoval and a separate design fee paid to A Design Studio Seattle. Usage rights can also be purchased (limited or complete) for an additional fee. Any unlawful distribution of said artwork is a violation of federal copyright laws.

PROJECT NAME
Terrace Station

PROJECT #
20-004

ADDRESS
24000 Van Ry Blvd
Mountlake Terrace, WA 98043

DATE
08/05/20

VERSION NOTES

V1	07/14 Concept design
V2	07/31 Revise signs
V3	08/06 Revise signs
V4	08/22 Revise signs
V5	10/02 Revise signs
V6	11/19 Revise signs
V7	01/02 Revise signs
V8	02/20 Revise all concepts & signs
V9	02/24 Revise signs
V10	03/19 Add signs, revise narrative
V11	05/19 Add/revise signs, revise all B3
V12	05/22 Revise B3 & directional signs
V13	06/02 Revise B1 canopy details
V14	08/05 Revise per city comments
V15	

PAGE SCALE
1/4" = 1'-0"

PAGE #

B1-S19 - ATTACHMENT DETAILS

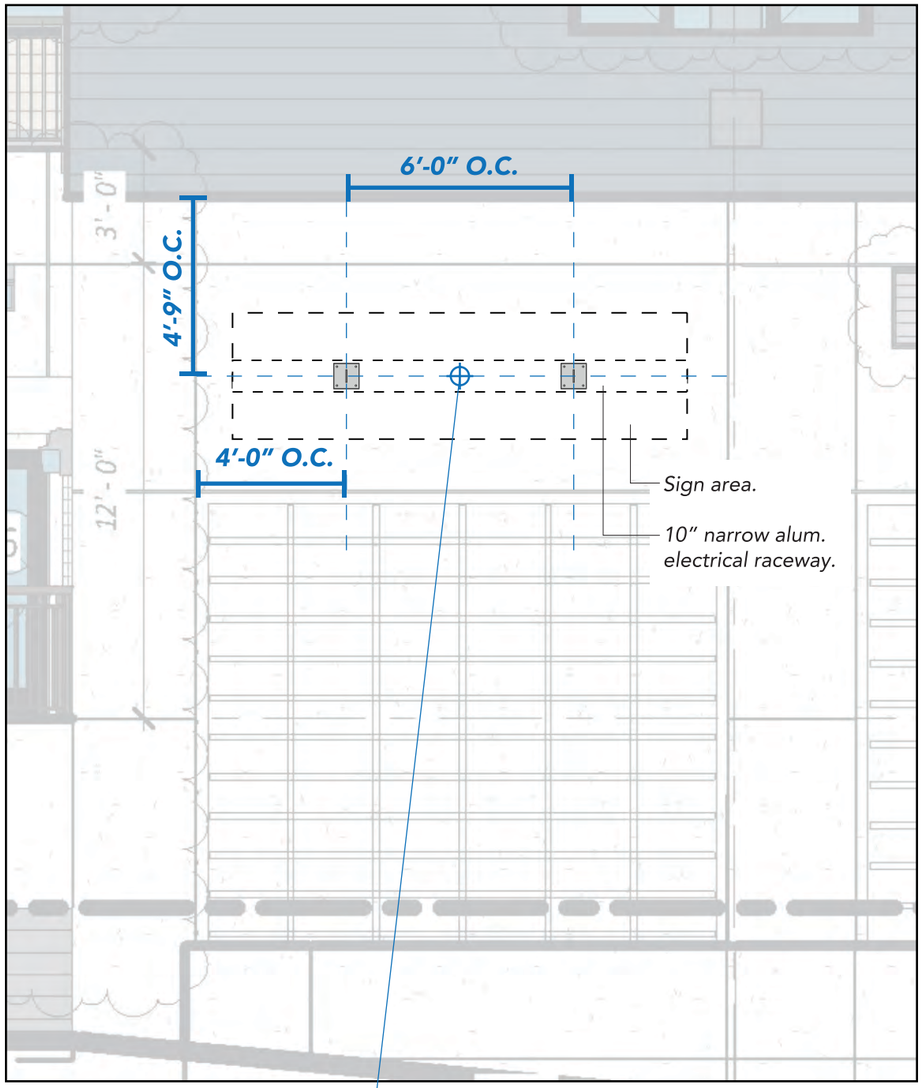

B1 West Elevation
Scale: 1/4"=1'-0"

Primary Electrical Location
Client to provide 20 Amp / 120 Volt dedicated circuit to sign location

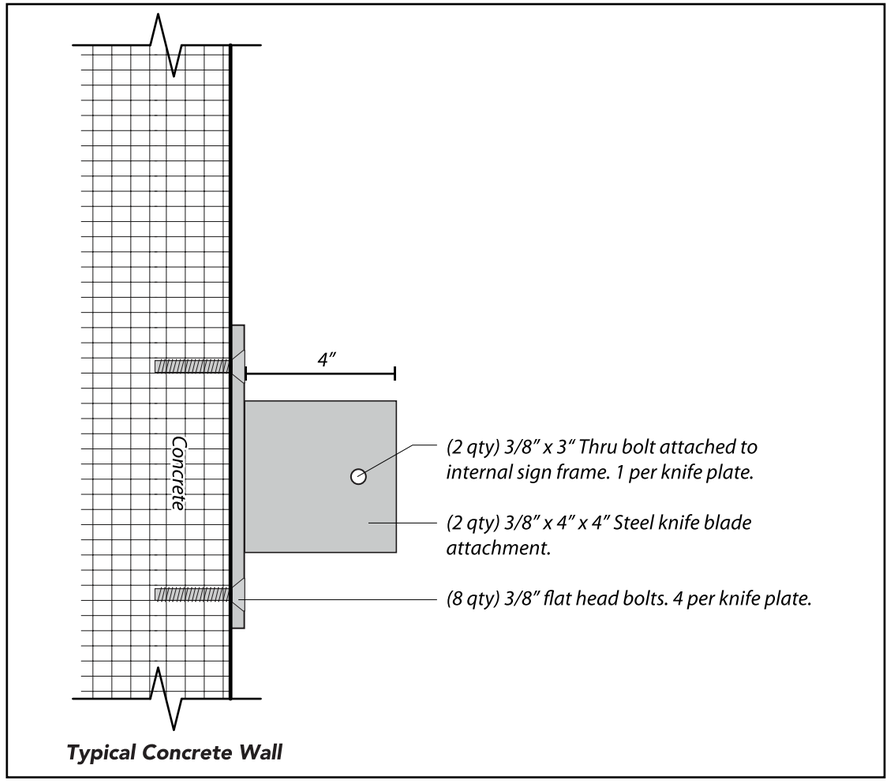

Knife Plate Install Detail
Scale: 3"=1'-0"

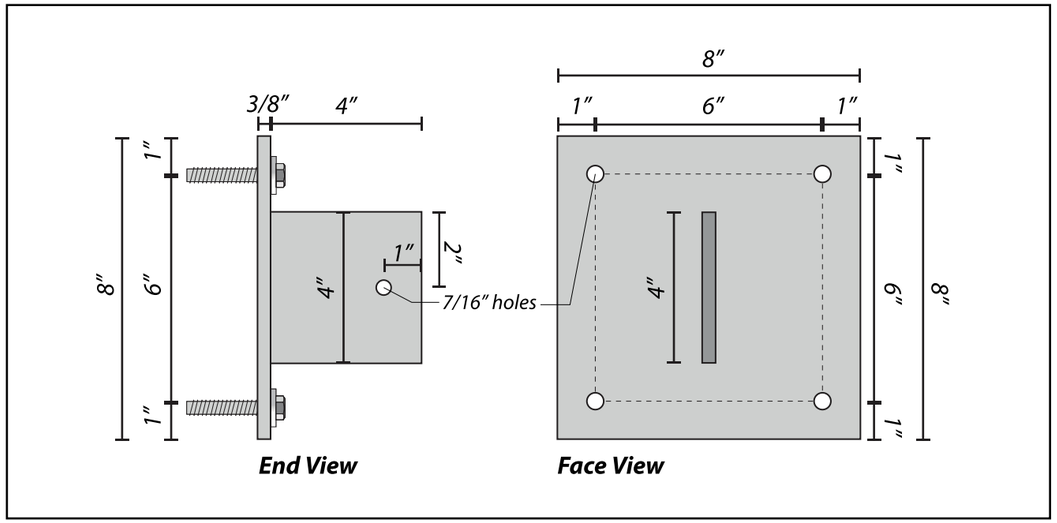

3/8" x 8" x 8" Steel Plate Detail
Scale: 3"=1'-0"

A DESIGN STUDIO

MAIN CONTACT
Gracia Mueller
360.929.3077

CREATIVE
Brody Lund
425.359.7380

Additional information:
adesignstudioseattle.com

Follow us on social:
@adesignstudioseattle

COPYRIGHT
All artwork contained herein is the copyrighted property of A Design Studio Seattle. This includes, but is not limited to, logos, specifications, artwork and engineering. Any usage beyond internal reviews shall require our appoval and a separate design fee paid to A Design Studio Seattle. Usage rights can also be purchased (limited or complete) for an additional fee. Any unlawful distribution of said artwork is a violation of federal copyright laws.

PROJECT NAME
Terrace Station

PROJECT #
20-004

ADDRESS
24000 Van Ry Blvd
Mountlake Terrace, WA 98043

DATE
08/05/20

VERSION NOTES

V1	07/14 Concept design
V2	07/31 Revise signs
V3	08/06 Revise signs
V4	08/22 Revise signs
V5	10/02 Revise signs
V6	11/19 Revise signs
V7	01/02 Revise signs
V8	02/20 Revise all concepts & signs
V9	02/24 Revise signs
V10	03/19 Add signs, revise narrative
V11	05/19 Add/revise signs, revise all B3
V12	05/22 Revise B3 & directional signs
V13	06/02 Revise B1 canopy details
V14	08/05 Revise per city comments
V15	

PAGE SCALE
As Noted

PAGE #

B1-S20 - ELEVATIONS

Sign Area: 34.2 Square Feet

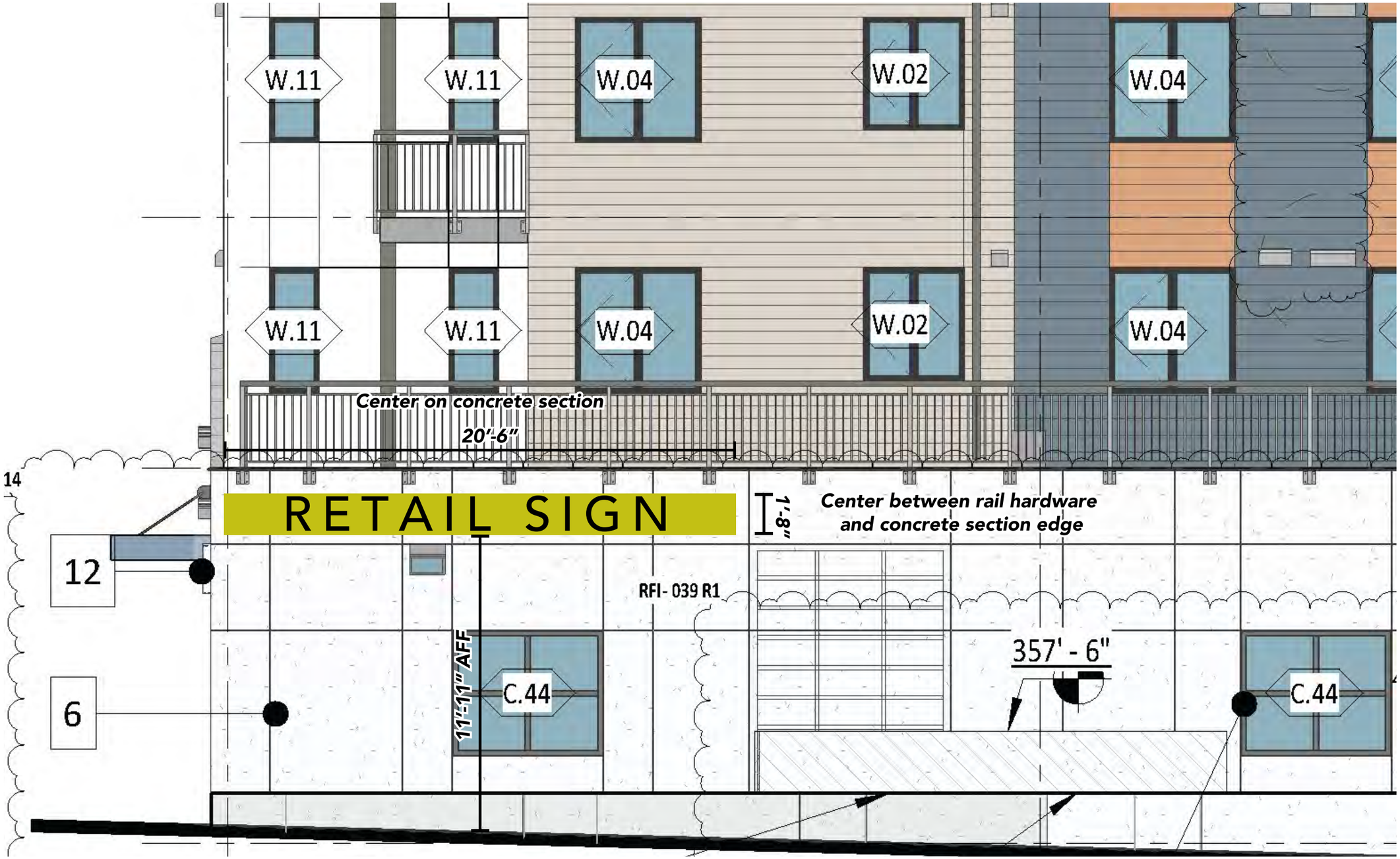

B1 West Elevation

A DESIGN STUDIO

MAIN CONTACT
Gracia Mueller
360.929.3077

CREATIVE
Brody Lund
425.359.7380

Additional information:
adesignstudioseattle.com

Follow us on social:
@adesignstudioseattle

COPYRIGHT
All artwork contained herein is the copyrighted property of A Design Studio Seattle. This includes, but is not limited to, logos, specifications, artwork and engineering. Any usage beyond internal reviews shall require our appoval and a separate design fee paid to A Design Studio Seattle. Usage rights can also be purchased (limited or complete) for an additional fee. Any unlawful distribution of said artwork is a violation of federal copyright laws.

PROJECT NAME
Terrace Station

PROJECT #
20-004

ADDRESS
24000 Van Ry Blvd
Mountlake Terrace, WA 98043

DATE
08/05/20

VERSION NOTES

V1	07/14 Concept design
V2	07/31 Revise signs
V3	08/06 Revise signs
V4	08/22 Revise signs
V5	10/02 Revise signs
V6	11/19 Revise signs
V7	01/02 Revise signs
V8	02/20 Revise all concepts & signs
V9	02/24 Revise signs
V10	03/19 Add signs, revise narrative
V11	05/19 Add/revise signs, revise all B3
V12	05/22 Revise B3 & directional signs
V13	06/02 Revise B1 canopy details
V14	08/05 Revise per city comments
V15	

PAGE SCALE
1/4" = 1'-0"

PAGE #

B1-S20 - ATTACHMENT DETAILS

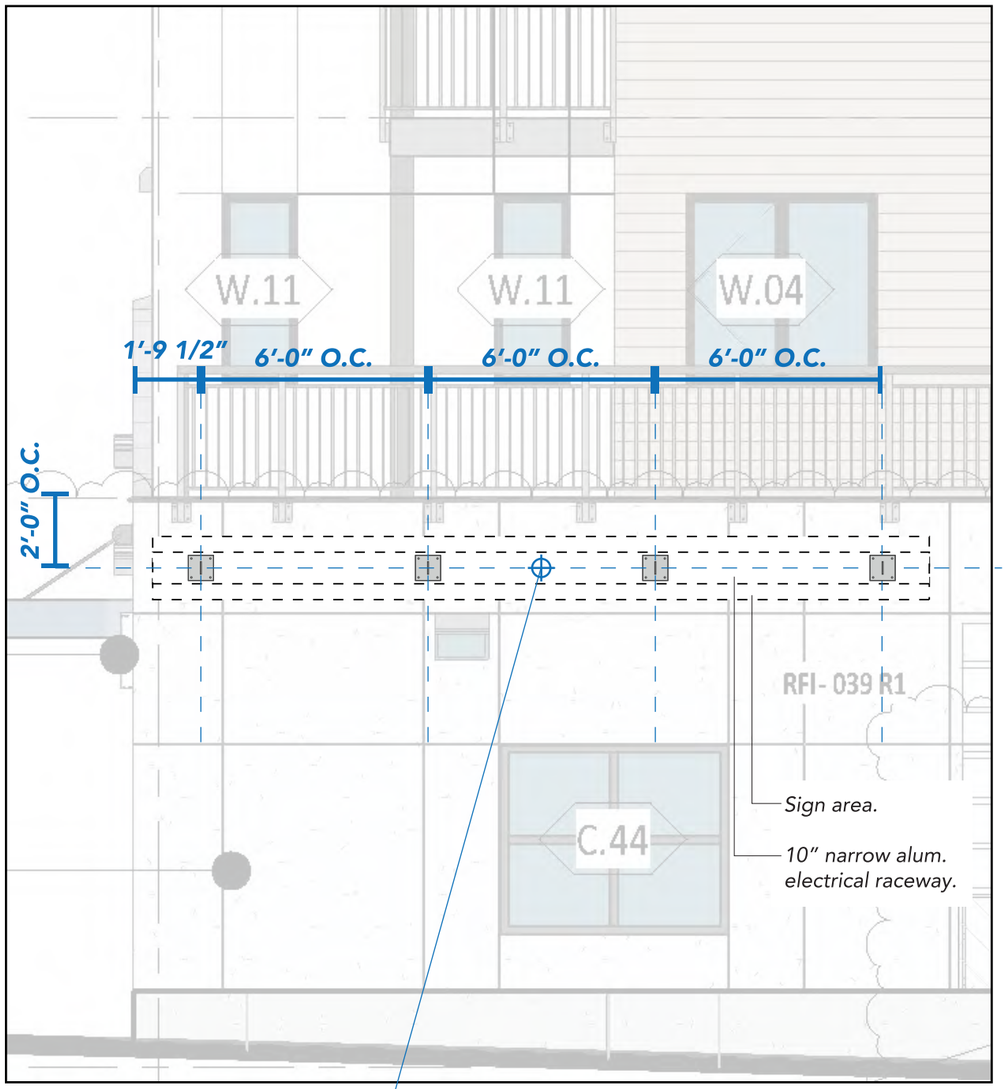

B1 West Elevation
Scale: 1/4"=1'-0"

Primary Electrical Location
Client to provide 20 Amp / 120 Volt dedicated circuit to sign location

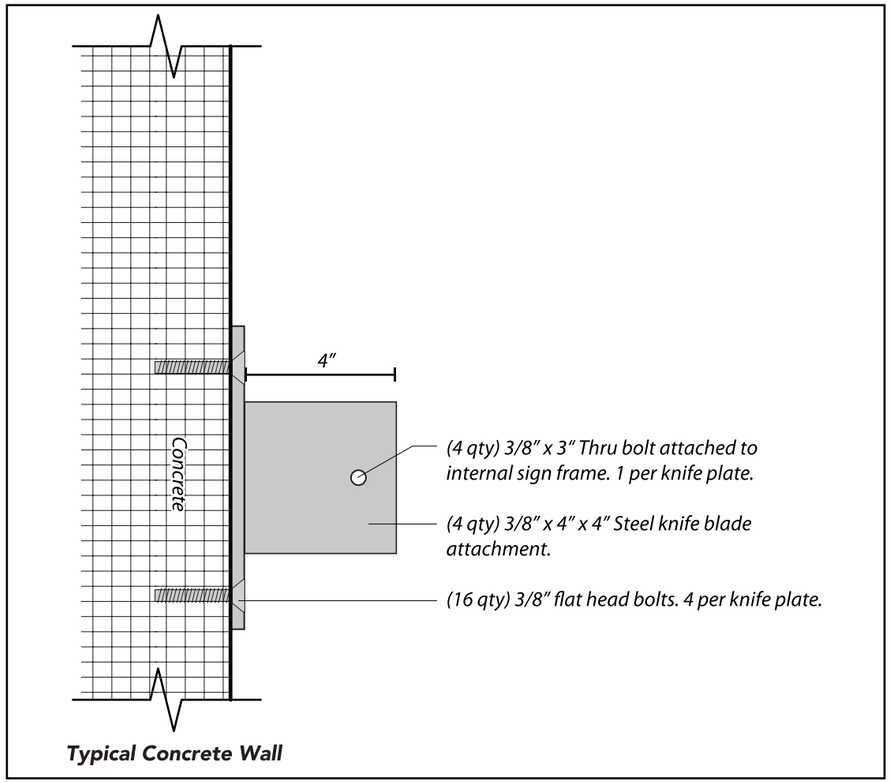

Knife Plate Install Detail
Scale: 3"=1'-0"

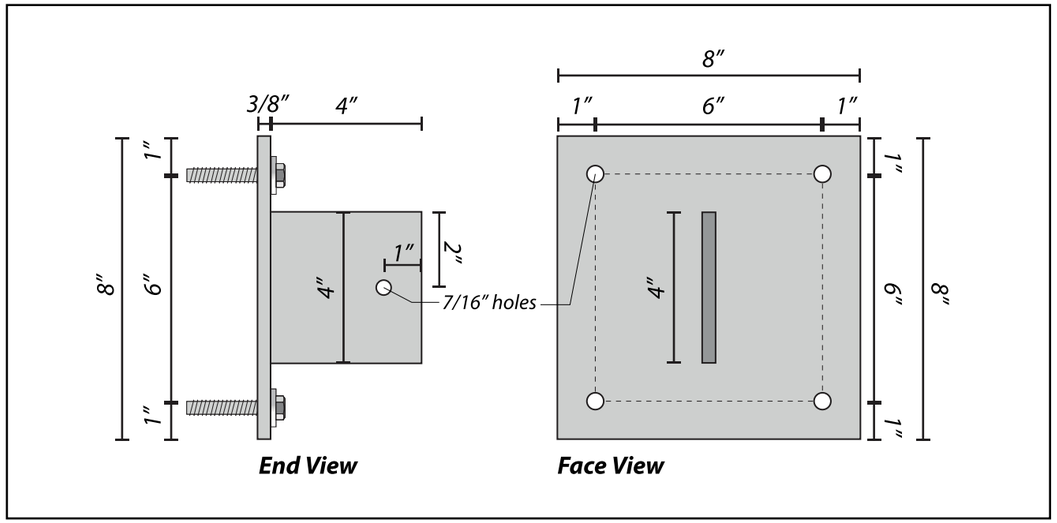

3/8" x 8" x 8" Steel Plate Detail
Scale: 3"=1'-0"

A DESIGN STUDIO

MAIN CONTACT
Gracia Mueller
360.929.3077

CREATIVE
Brody Lund
425.359.7380

Additional information:
adesignstudioseattle.com

Follow us on social:
@adesignstudioseattle

COPYRIGHT
All artwork contained herein is the copyrighted property of A Design Studio Seattle. This includes, but is not limited to, logos, specifications, artwork and engineering. Any usage beyond internal reviews shall require our appoval and a separate design fee paid to A Design Studio Seattle. Usage rights can also be purchased (limited or complete) for an additional fee. Any unlawful distribution of said artwork is a violation of federal copyright laws.

PROJECT NAME
Terrace Station

PROJECT #
20-004

ADDRESS
24000 Van Ry Blvd
Mountlake Terrace, WA 98043

DATE
08/05/20

VERSION NOTES

V1	07/14 Concept design
V2	07/31 Revise signs
V3	08/06 Revise signs
V4	08/22 Revise signs
V5	10/02 Revise signs
V6	11/19 Revise signs
V7	01/02 Revise signs
V8	02/20 Revise all concepts & signs
V9	02/24 Revise signs
V10	03/19 Add signs, revise narrative
V11	05/19 Add/revise signs, revise all B3
V12	05/22 Revise B3 & directional signs
V13	06/02 Revise B1 canopy details
V14	08/05 Revise per city comments
V15	

PAGE SCALE
As Noted

PAGE #
81

B1-S21 - ELEVATIONS

Sign Area: 40.0 Square Feet

B1 North Elevation

A DESIGN STUDIO

MAIN CONTACT
Gracia Mueller
360.929.3077

CREATIVE
Brody Lund
425.359.7380

Additional information:
adesignstudioseattle.com

Follow us on social:
@adesignstudioseattle

COPYRIGHT
All artwork contained herein is the copyrighted property of A Design Studio Seattle. This includes, but is not limited to, logos, specifications, artwork and engineering. Any usage beyond internal reviews shall require our appoval and a separate design fee paid to A Design Studio Seattle. Usage rights can also be purchased (limited or complete) for an additional fee. Any unlawful distribution of said artwork is a violation of federal copyright laws.

PROJECT NAME
Terrace Station

PROJECT #
20-004

ADDRESS
24000 Van Ry Blvd
Mountlake Terrace, WA 98043

DATE
08/05/20

VERSION NOTES

V1	07/14 Concept design
V2	07/31 Revise signs
V3	08/06 Revise signs
V4	08/22 Revise signs
V5	10/02 Revise signs
V6	11/19 Revise signs
V7	01/02 Revise signs
V8	02/20 Revise all concepts & signs
V9	02/24 Revise signs
V10	03/19 Add signs, revise narrative
V11	05/19 Add/revise signs, revise all B3
V12	05/22 Revise B3 & directional signs
V13	06/02 Revise B1 canopy details
V14	08/05 Revise per city comments
V15	

PAGE SCALE
1/4" = 1'-0"

PAGE #

B1-S21 - ATTACHMENT DETAILS

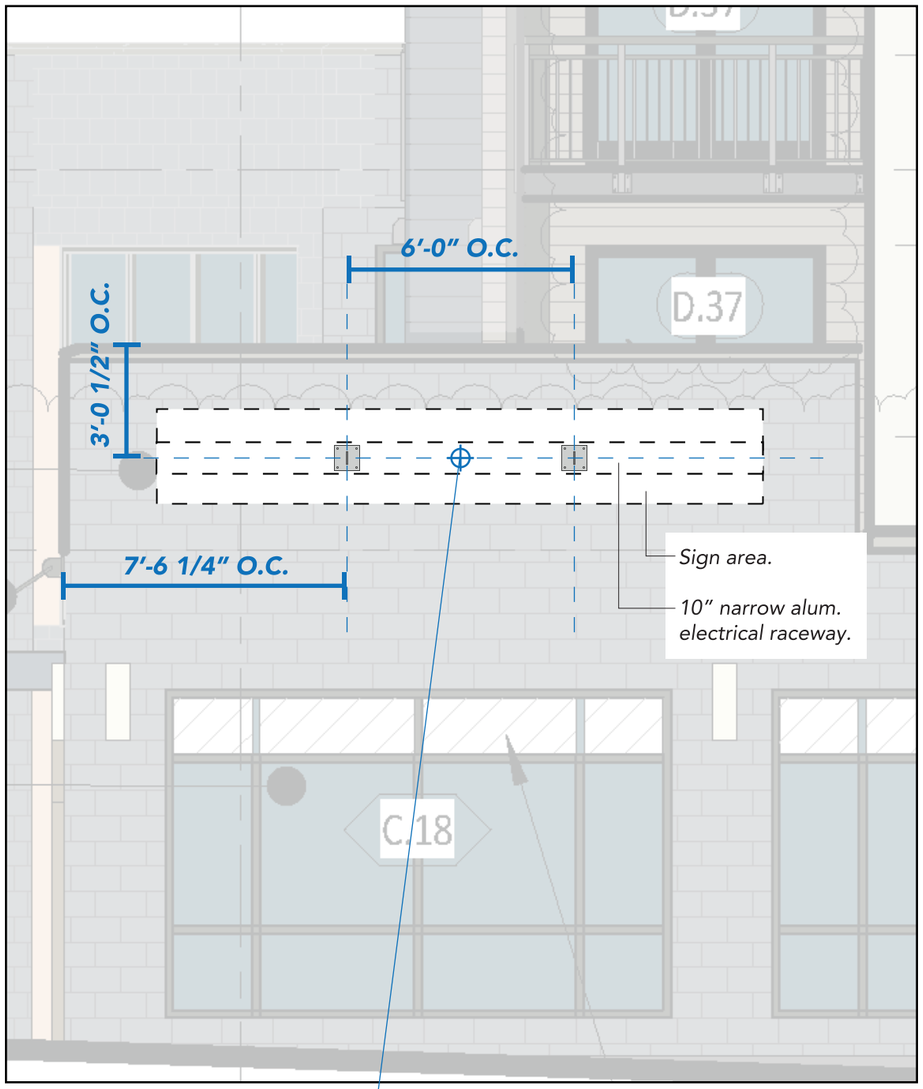

B1 North Elevation
Scale: 1/4"=1'-0"

Primary Electrical Location
Client to provide 20 Amp / 120 Volt dedicated circuit to sign location

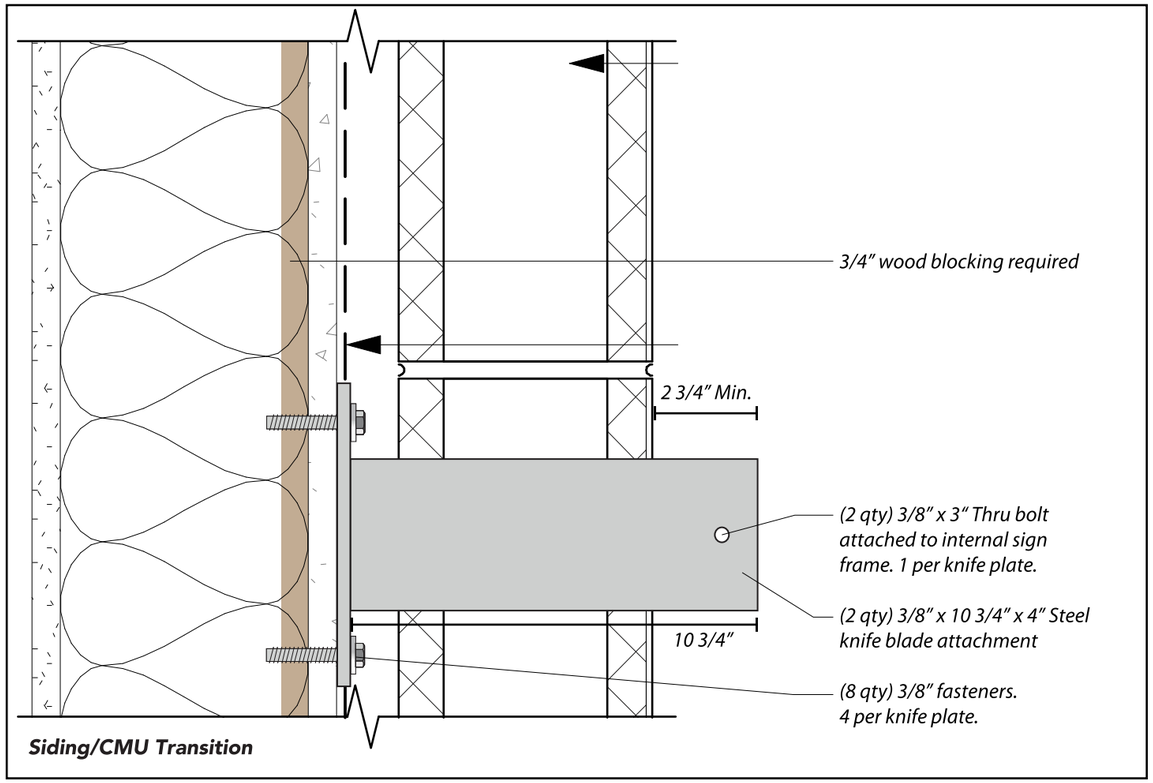

Knife Plate Install Detail
Scale: 3"=1'-0"

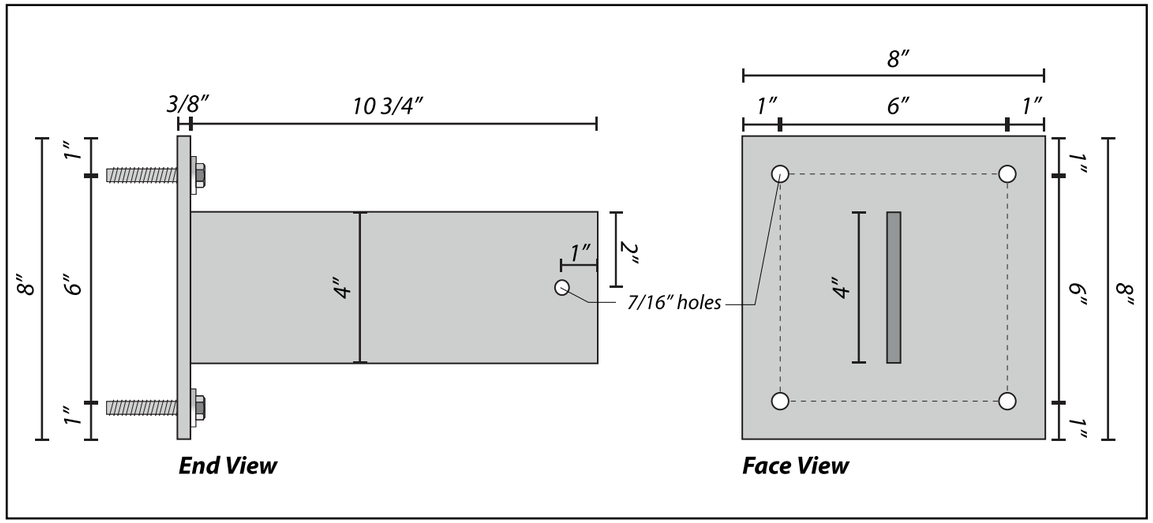

3/8" x 8" x 8" Steel Plate Detail
Scale: 3"=1'-0"

A DESIGN STUDIO

MAIN CONTACT
Gracia Mueller
360.929.3077

CREATIVE
Brody Lund
425.359.7380

Additional information:
adesignstudioseattle.com

Follow us on social:
@adesignstudioseattle

COPYRIGHT
All artwork contained herein is the copyrighted property of A Design Studio Seattle. This includes, but is not limited to, logos, specifications, artwork and engineering. Any usage beyond internal reviews shall require our appoval and a separate design fee paid to A Design Studio Seattle. Usage rights can also be purchased (limited or complete) for an additional fee. Any unlawful distribution of said artwork is a violation of federal copyright laws.

PROJECT NAME
Terrace Station

PROJECT #
20-004

ADDRESS
24000 Van Ry Blvd
Mountlake Terrace, WA 98043

DATE
08/05/20

VERSION NOTES

V1	07/14 Concept design
V2	07/31 Revise signs
V3	08/06 Revise signs
V4	08/22 Revise signs
V5	10/02 Revise signs
V6	11/19 Revise signs
V7	01/02 Revise signs
V8	02/20 Revise all concepts & signs
V9	02/24 Revise signs
V10	03/19 Add signs, revise narrative
V11	05/19 Add/revise signs, revise all B3
V12	05/22 Revise B3 & directional signs
V13	06/02 Revise B1 canopy details
V14	08/05 Revise per city comments
V15	

PAGE SCALE
As Noted

PAGE #
83

B1-S22 - ELEVATIONS

Sign Area: 40.0 Square Feet

B1 East Elevation

A DESIGN STUDIO

MAIN CONTACT
Gracia Mueller
360.929.3077

CREATIVE
Brody Lund
425.359.7380

Additional information:
adesignstudioseattle.com

Follow us on social:
@adesignstudioseattle

COPYRIGHT
All artwork contained herein is the copyrighted property of A Design Studio Seattle. This includes, but is not limited to, logos, specifications, artwork and engineering. Any usage beyond internal reviews shall require our appoval and a separate design fee paid to A Design Studio Seattle. Usage rights can also be purchased (limited or complete) for an additional fee. Any unlawful distribution of said artwork is a violation of federal copyright laws.

PROJECT NAME
Terrace Station

PROJECT #
20-004

ADDRESS
24000 Van Ry Blvd
Mountlake Terrace, WA 98043

DATE
08/05/20

VERSION NOTES

V1	07/14 Concept design
V2	07/31 Revise signs
V3	08/06 Revise signs
V4	08/22 Revise signs
V5	10/02 Revise signs
V6	11/19 Revise signs
V7	01/02 Revise signs
V8	02/20 Revise all concepts & signs
V9	02/24 Revise signs
V10	03/19 Add signs, revise narrative
V11	05/19 Add/revise signs, revise all B3
V12	05/22 Revise B3 & directional signs
V13	06/02 Revise B1 canopy details
V14	08/05 Revise per city comments
V15	

PAGE SCALE
1/4" = 1'-0"

PAGE #

B1-S22 - ATTACHMENT DETAILS

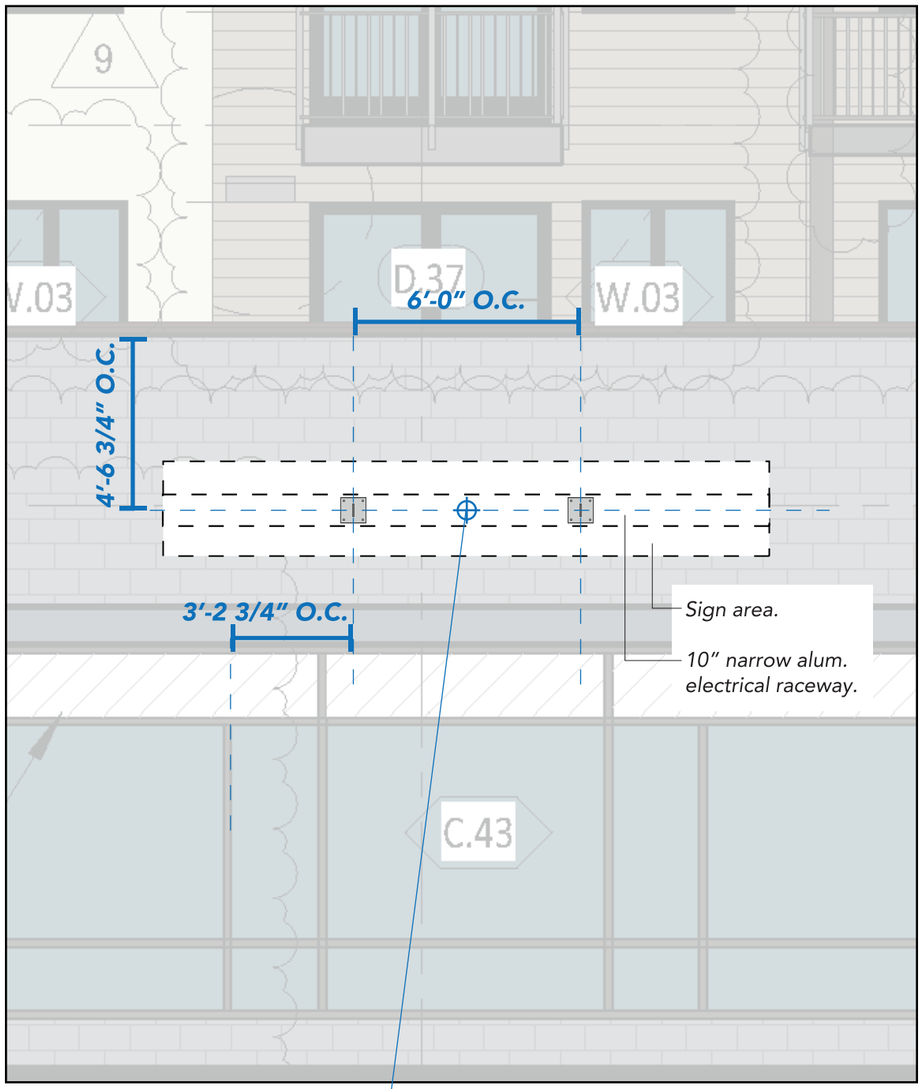

B1 East Elevation
Scale: 1/4"=1'-0"

Primary Electrical Location
Client to provide 20 Amp / 120 Volt dedicated circuit to sign location

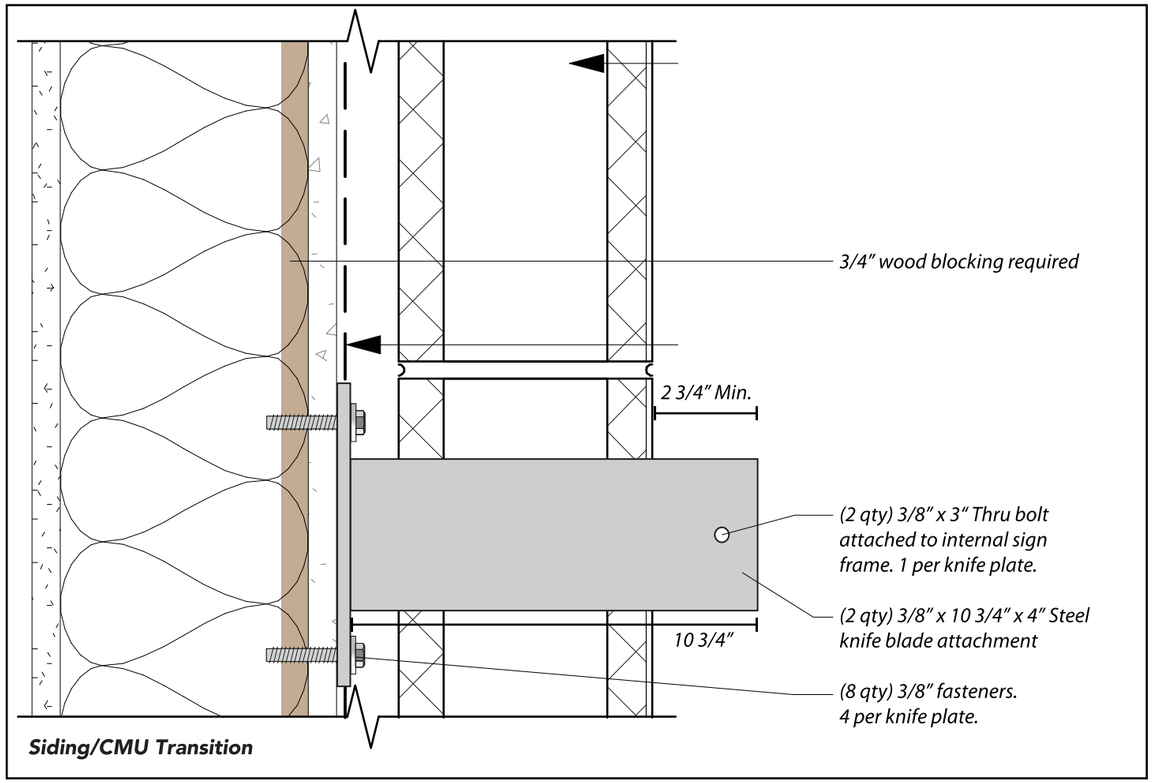

Knife Plate Install Detail
Scale: 3"=1'-0"

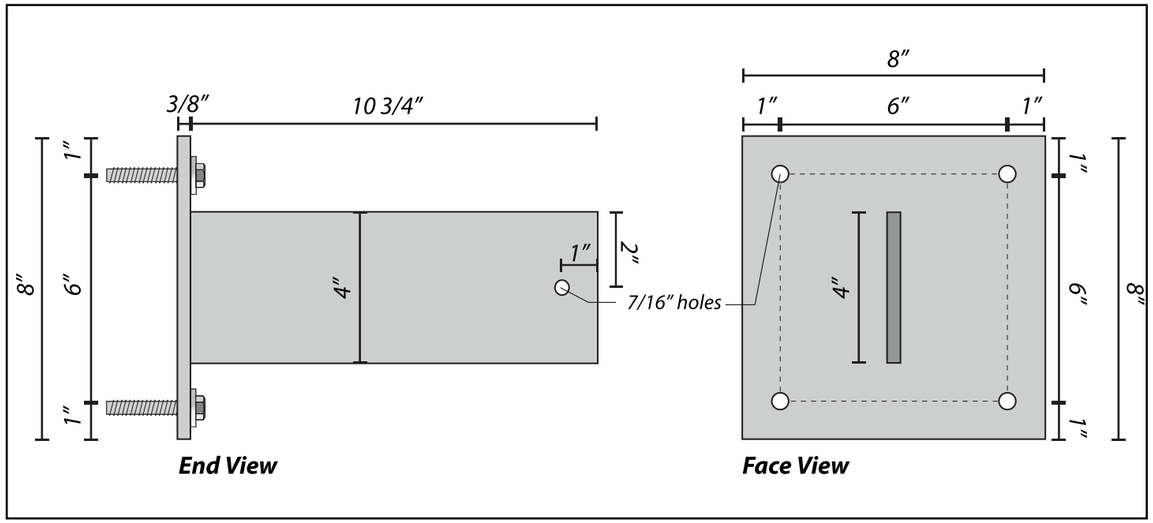

3/8" x 8" x 8" Steel Plate Detail
Scale: 3"=1'-0"

A DESIGN STUDIO

MAIN CONTACT
Gracia Mueller
360.929.3077

CREATIVE
Brody Lund
425.359.7380

Additional information:
adesignstudioseattle.com

Follow us on social:
@adesignstudioseattle

COPYRIGHT
All artwork contained herein is the copyrighted property of A Design Studio Seattle. This includes, but is not limited to, logos, specifications, artwork and engineering. Any usage beyond internal reviews shall require our appoval and a separate design fee paid to A Design Studio Seattle. Usage rights can also be purchased (limited or complete) for an additional fee. Any unlawful distribution of said artwork is a violation of federal copyright laws.

PROJECT NAME
Terrace Station

PROJECT #
20-004

ADDRESS
24000 Van Ry Blvd
Mountlake Terrace, WA 98043

DATE
08/05/20

VERSION NOTES

V1	07/14 Concept design
V2	07/31 Revise signs
V3	08/06 Revise signs
V4	08/22 Revise signs
V5	10/02 Revise signs
V6	11/19 Revise signs
V7	01/02 Revise signs
V8	02/20 Revise all concepts & signs
V9	02/24 Revise signs
V10	03/19 Add signs, revise narrative
V11	05/19 Add/revise signs, revise all B3
V12	05/22 Revise B3 & directional signs
V13	06/02 Revise B1 canopy details
V14	08/05 Revise per city comments
V15	

PAGE SCALE
As Noted

PAGE #

B1-S23 - ELEVATIONS

Sign Area: 40.0 Square Feet

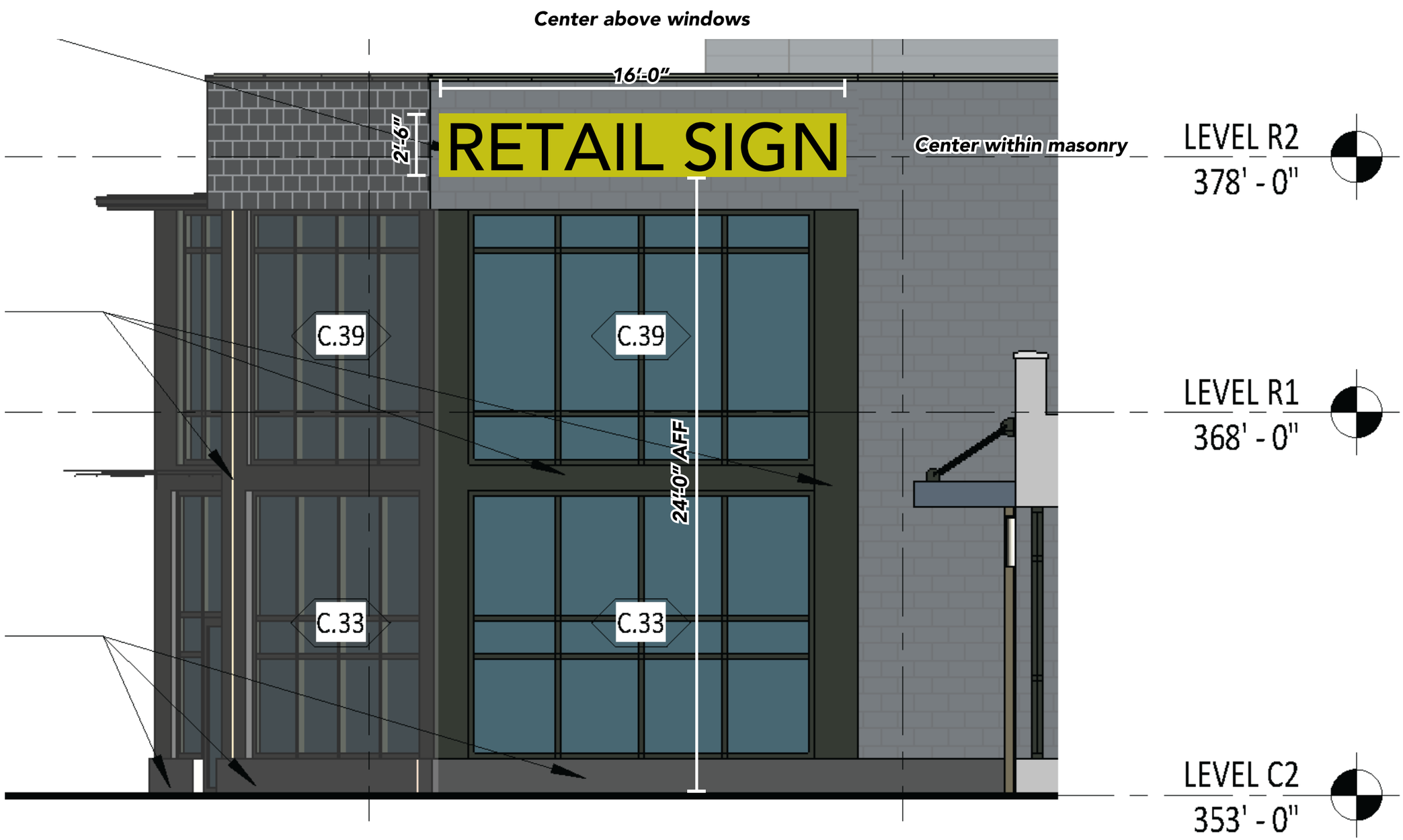

B1 North Elevation - Covered Outdoor Plaza

A DESIGN STUDIO

MAIN CONTACT
Gracia Mueller
360.929.3077

CREATIVE
Brody Lund
425.359.7380

Additional information:
adesignstudioseattle.com

Follow us on social:
@adesignstudioseattle

COPYRIGHT
All artwork contained herein is the copyrighted property of A Design Studio Seattle. This includes, but is not limited to, logos, specifications, artwork and engineering. Any usage beyond internal reviews shall require our appoval and a separate design fee paid to A Design Studio Seattle. Usage rights can also be purchased (limited or complete) for an additional fee. Any unlawful distribution of said artwork is a violation of federal copyright laws.

PROJECT NAME
Terrace Station

PROJECT #
20-004

ADDRESS
24000 Van Ry Blvd
Mountlake Terrace, WA 98043

DATE
08/05/20

VERSION NOTES

V1	07/14 Concept design
V2	07/31 Revise signs
V3	08/06 Revise signs
V4	08/22 Revise signs
V5	10/02 Revise signs
V6	11/19 Revise signs
V7	01/02 Revise signs
V8	02/20 Revise all concepts & signs
V9	02/24 Revise signs
V10	03/19 Add signs, revise narrative
V11	05/19 Add/revise signs, revise all B3
V12	05/22 Revise B3 & directional signs
V13	06/02 Revise B1 canopy details
V14	08/05 Revise per city comments
V15	

PAGE SCALE
1/4" = 1'-0"

PAGE #
86

B1-S23 - ATTACHMENT DETAILS

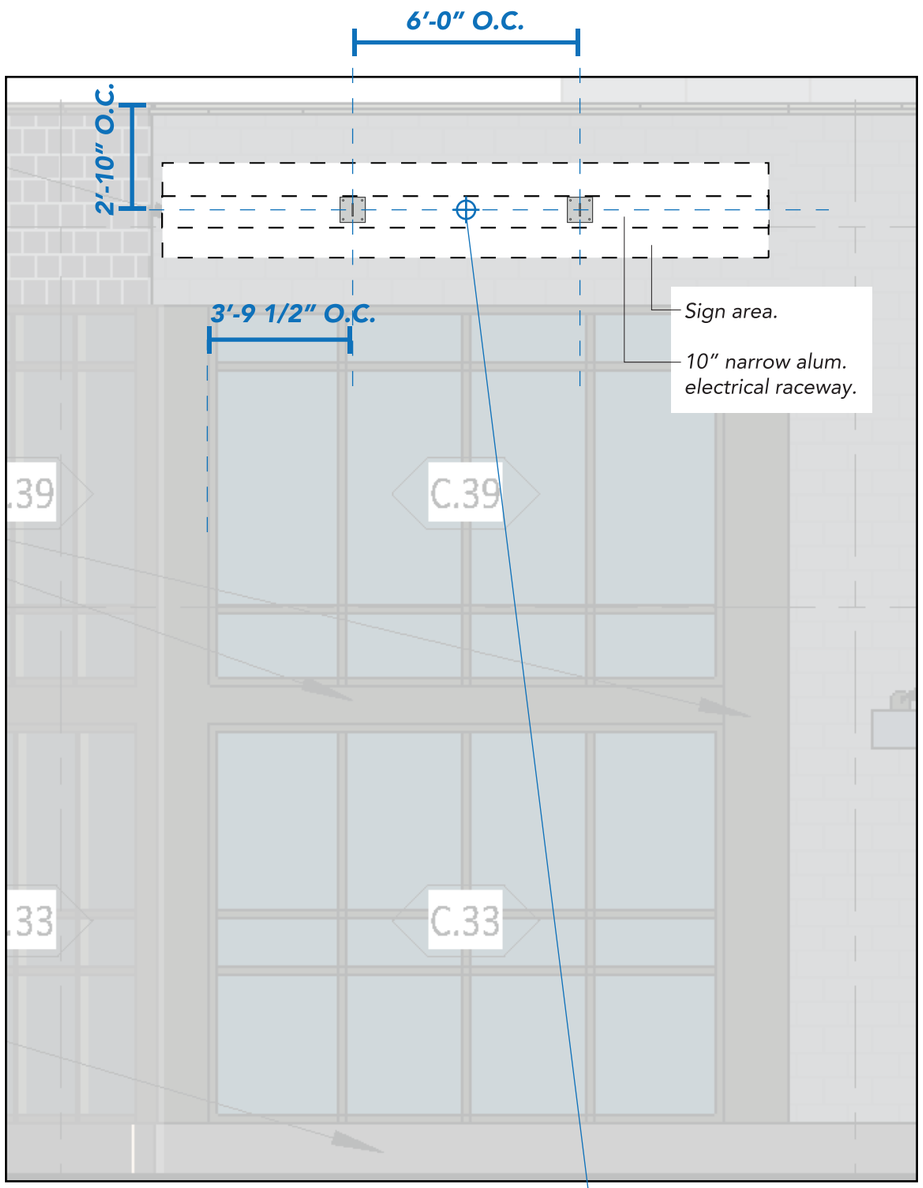

B1 North Elevation - Covered Outdoor Plaza
Scale: 1/4"=1'-0"

Primary Electrical Location
Client to provide 20 Amp / 120 Volt dedicated circuit to sign location

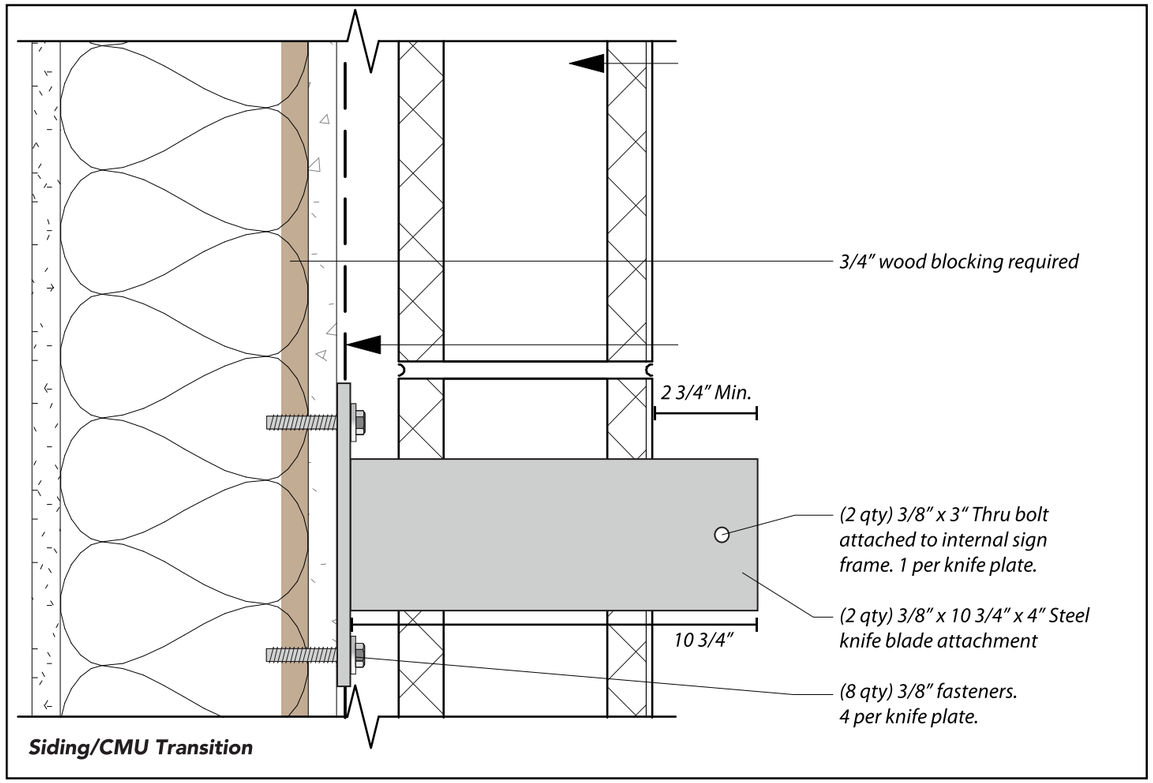

Knife Plate Install Detail
Scale: 3"=1'-0"

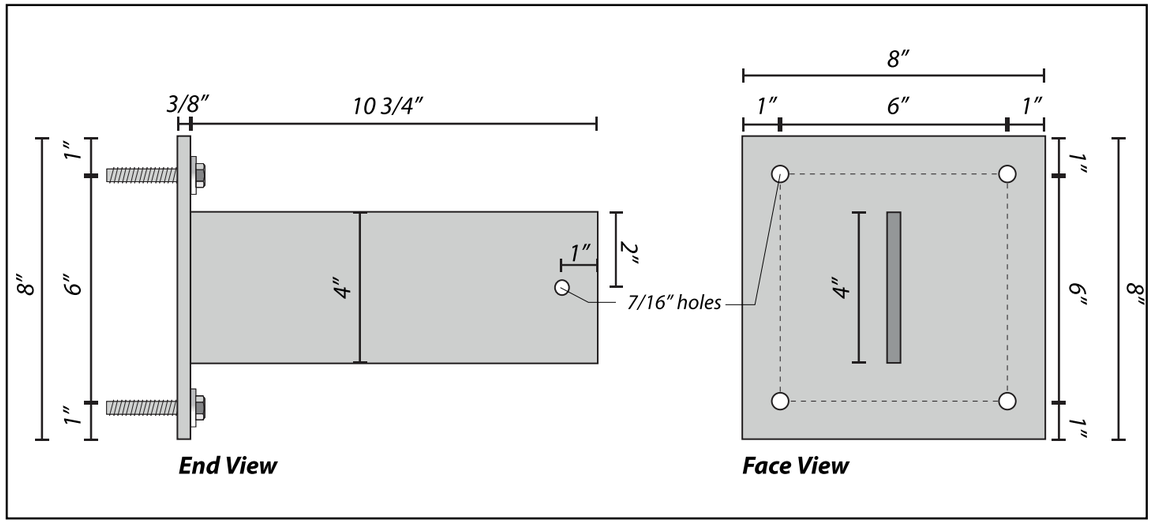

3/8" x 8" x 8" Steel Plate Detail
Scale: 3"=1'-0"

A DESIGN STUDIO

MAIN CONTACT
Gracia Mueller
360.929.3077

CREATIVE
Brody Lund
425.359.7380

Additional information:
adesignstudioseattle.com

Follow us on social:
@adesignstudioseattle

COPYRIGHT
All artwork contained herein is the copyrighted property of A Design Studio Seattle. This includes, but is not limited to, logos, specifications, artwork and engineering. Any usage beyond internal reviews shall require our appoval and a separate design fee paid to A Design Studio Seattle. Usage rights can also be purchased (limited or complete) for an additional fee. Any unlawful distribution of said artwork is a violation of federal copyright laws.

PROJECT NAME
Terrace Station

PROJECT #
20-004

ADDRESS
24000 Van Ry Blvd
Mountlake Terrace, WA 98043

DATE
08/05/20

VERSION NOTES

V1	07/14 Concept design
V2	07/31 Revise signs
V3	08/06 Revise signs
V4	08/22 Revise signs
V5	10/02 Revise signs
V6	11/19 Revise signs
V7	01/02 Revise signs
V8	02/20 Revise all concepts & signs
V9	02/24 Revise signs
V10	03/19 Add signs, revise narrative
V11	05/19 Add/revise signs, revise all B3
V12	05/22 Revise B3 & directional signs
V13	06/02 Revise B1 canopy details
V14	08/05 Revise per city comments
V15	

PAGE SCALE
As Noted

PAGE #
87

BUILDING 2

A DESIGN STUDIO

MAIN CONTACT
Gracia Mueller
360.929.3077

CREATIVE
Jaclyn Veasley
425.890.6251

Additional information:
adesignstudioseattle.com

Follow us on social:
@adesignstudioseattle

COPYRIGHT
All artwork contained herein is the copyrighted property of A Design Studio Seattle. This includes, but is not limited to, logos, specifications, artwork and engineering. Any usage beyond internal reviews shall require our appoval and a separate design fee paid to A Design Studio Seattle. Usage rights can also be purchased (limited or complete) for an additional fee. Any unlawful distribution of said artwork is a violation of federal copyright laws.

PROJECT NAME
Terrace Station

PROJECT #
20-004

ADDRESS
Address Varies
Mountlake Terrace, WA 98043

DATE
08/05/20

VERSION NOTES

V1	07/14 Concept design
V2	07/31 Revise signs
V3	08/06 Revise signs
V4	08/22 Revise signs
V5	10/02 Revise signs
V6	11/19 Revise signs
V7	01/02 Revise signs
V8	02/20 Revise all concepts & signs
V9	02/24 Revise signs
V10	03/19 Add signs, revise narrative
V11	05/19 Add/revise signs, revise all B3
V12	05/22 Revise B3 & directional signs
V13	06/02 Revise B1 canopy details
V14	08/05 Revise per city comments
V15	

PAGE SCALE
As Noted

PAGE #

SITE PLANS - B2

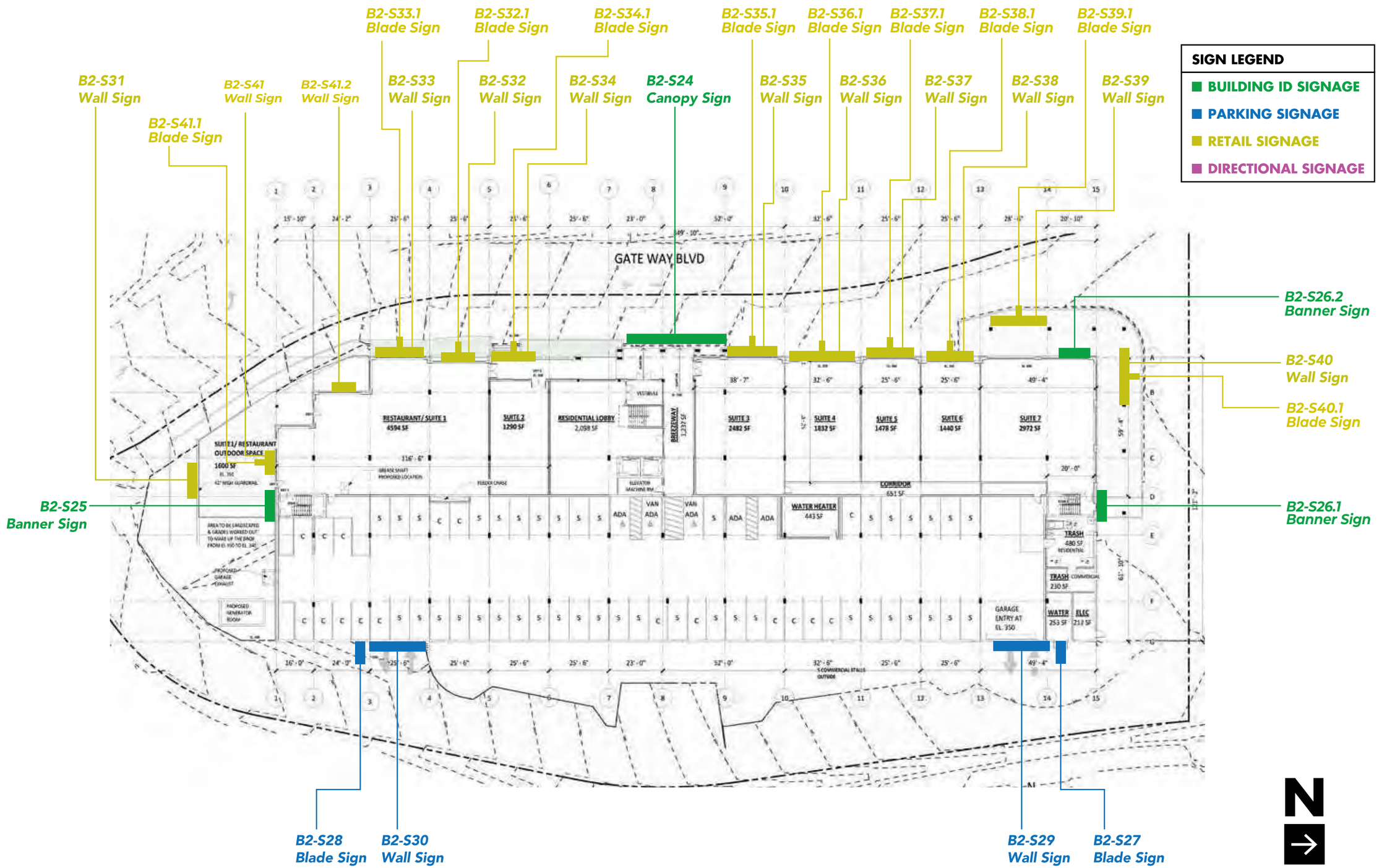

A DESIGN STUDIO

MAIN CONTACT
Gracia Mueller
360.929.3077

CREATIVE
Brody Lund
425.359.7380

Additional information:
adesignstudioseattle.com

Follow us on social:
@adesignstudioseattle

COPYRIGHT
All artwork contained herein is the copyrighted property of A Design Studio Seattle. This includes, but is not limited to, logos, specifications, artwork and engineering. Any usage beyond internal reviews shall require our appoval and a separate design fee paid to A Design Studio Seattle. Usage rights can also be purchased (limited or complete) for an additional fee. Any unlawful distribution of said artwork is a violation of federal copyright laws.

PROJECT NAME
Terrace Station

PROJECT #
20-004

ADDRESS
24015 Van Ry Blvd
Mountlake Terrace, WA 98043

DATE
12/10/20

VERSION NOTES

V1
V2
V3
V4
V5
V6
V7
V8
V9
V10
V11
V12
V13
V14
V15

PAGE SCALE
As Noted

PAGE #

B2 - ELEVATIONS

COLOR KEY
BUILDING ID SIGNAGE
RETAIL SIGNAGE
PARKING SIGNAGE

East Elevation

B2-S28
Blade Sign

B2-S30
Wall Sign

B2-S29
Wall Sign

B2-S27
Blade Sign

A DESIGN STUDIO

MAIN CONTACT
Gracia Mueller
360.929.3077

CREATIVE
Brody Lund
425.359.7380

Additional information:
adesignstudioseattle.com

Follow us on social:
@adesignstudioseattle

COPYRIGHT
All artwork contained herein is the copyrighted property of A Design Studio Seattle. This includes, but is not limited to, logos, specifications, artwork and engineering. Any usage beyond internal reviews shall require our appoval and a separate design fee paid to A Design Studio Seattle. Usage rights can also be purchased (limited or complete) for an additional fee. Any unlawful distribution of said artwork is a violation of federal copyright laws.

PROJECT NAME
Terrace Station

PROJECT #
20-004

ADDRESS
24015 Van Ry Blvd
Mountlake Terrace, WA 98043

DATE
12/10/20

VERSION NOTES

V1
V2
V3
V4
V5
V6
V7
V8
V9
V10
V11
V12
V13
V14
V15

PAGE SCALE
1" = 30'-0"

PAGE #

B2 - ELEVATIONS

COLOR KEY

- **BUILDING ID SIGNAGE**
- **RETAIL SIGNAGE**
- **PARKING SIGNAGE**

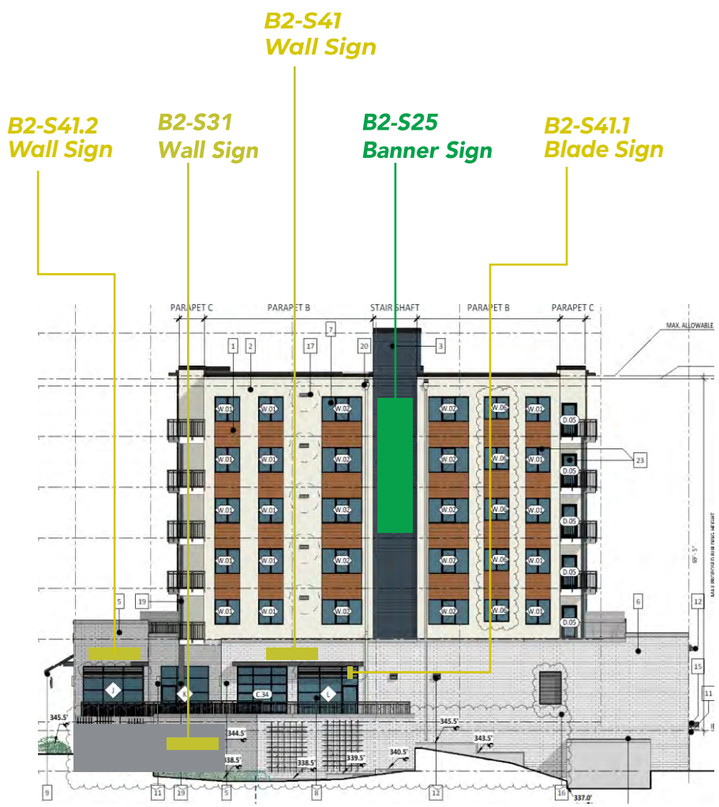

South Elevation

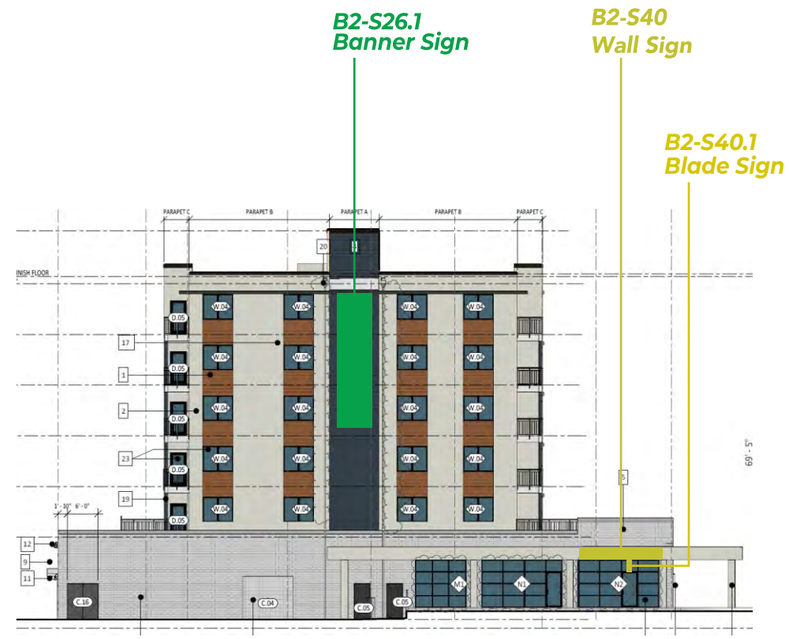

North Elevation

A DESIGN STUDIO

MAIN CONTACT
Gracia Mueller
360.929.3077

CREATIVE
Brody Lund
425.359.7380

Additional information:
adesignstudioseattle.com

Follow us on social:
@adesignstudioseattle

COPYRIGHT
All artwork contained herein is the copyrighted property of A Design Studio Seattle. This includes, but is not limited to, logos, specifications, artwork and engineering. Any usage beyond internal reviews shall require our appoval and a separate design fee paid to A Design Studio Seattle. Usage rights can also be purchased (limited or complete) for an additional fee. Any unlawful distribution of said artwork is a violation of federal copyright laws.

PROJECT NAME
Terrace Station

PROJECT #
20-004

ADDRESS
24015 Van Ry Blvd
Mountlake Terrace, WA 98043

DATE
12/10/20

VERSION NOTES

V1
V2
V3
V4
V5
V6
V7
V8
V9
V10
V11
V12
V13
V14
V15

PAGE SCALE
1" = 30'-0"

PAGE #

B2 - ELEVATIONS

COLOR KEY

- BUILDING ID SIGNAGE
- RETAIL SIGNAGE
- PARKING SIGNAGE

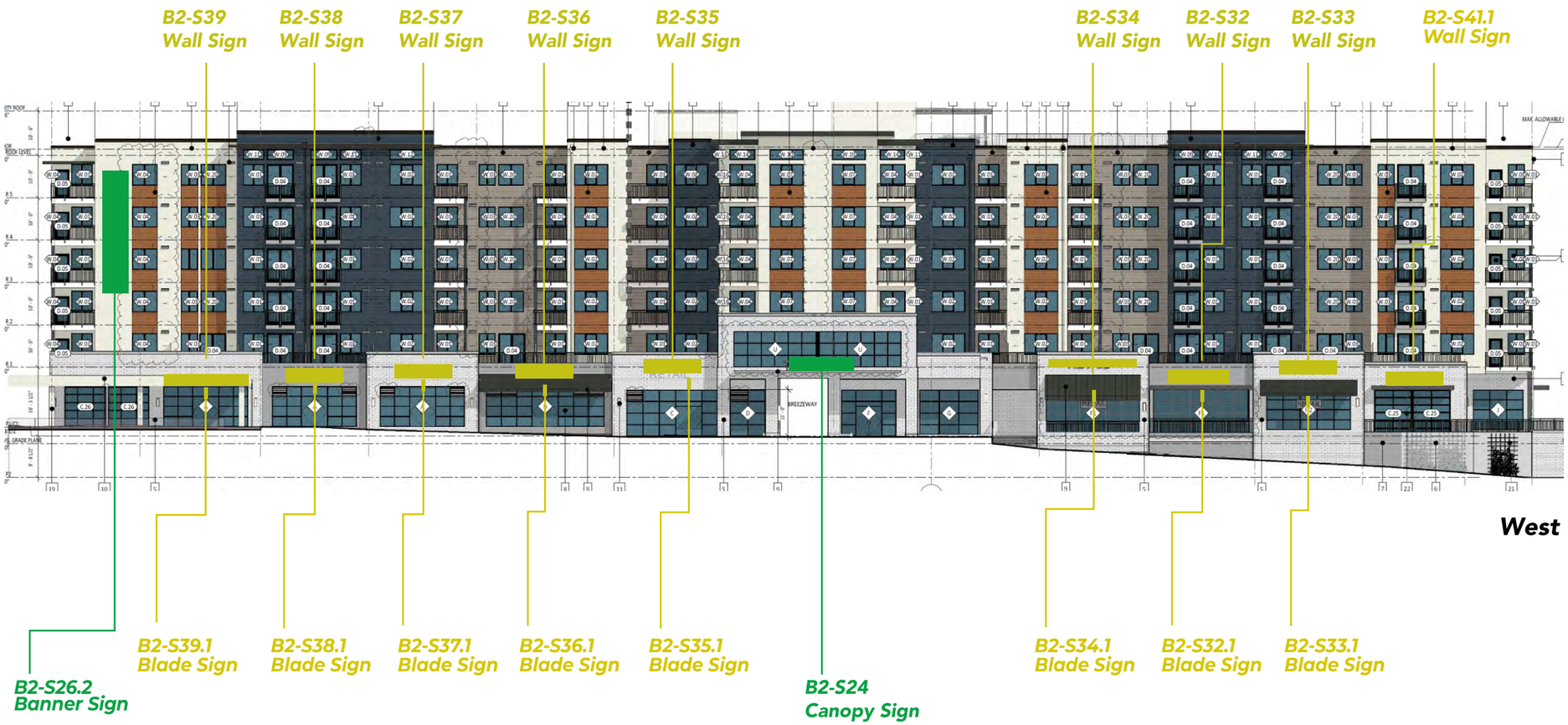

West Elevation

A DESIGN STUDIO

MAIN CONTACT
Gracia Mueller
360.929.3077

CREATIVE
Brody Lund
425.359.7380

Additional information:
adesignstudioseattle.com

Follow us on social:
@adesignstudioseattle

COPYRIGHT
All artwork contained herein is the copyrighted property of A Design Studio Seattle. This includes, but is not limited to, logos, specifications, artwork and engineering. Any usage beyond internal reviews shall require our appoval and a separate design fee paid to A Design Studio Seattle. Usage rights can also be purchased (limited or complete) for an additional fee. Any unlawful distribution of said artwork is a violation of federal copyright laws.

PROJECT NAME
Terrace Station

PROJECT #
20-004

ADDRESS
24015 Van Ry Blvd
Mountlake Terrace, WA 98043

DATE
12/10/20

VERSION NOTES

V1
V2
V3
V4
V5
V6
V7
V8
V9
V10
V11
V12
V13
V14
V15

PAGE SCALE
1" = 30'-0"

PAGE #

B2 - SIGN SCHEDULE

BUILDING 2		PAGE 88
B2-S24	S/F ILLUMINATED CANOPY SIGN ▪ QTY (1) 14'-0"W x 3'-5 5/8"H ▪ SIGN AREA: 48.6 SQ FT	PAGE 94-97
B2-S25	S/F NON-ILLUM. TEMP. BANNER SIGN ▪ QTY (1) 4'-4"W x 26'-7"H ▪ SIGN AREA: 115.2 SQ FT	PAGE 98, 101-102
B2-S26	S/F NON-ILLUM. TEMP. BANNER SIGN ▪ QTY (1) 4'-4"W x 26'-7"H ▪ SIGN AREA: 115.2 SQ FT	PAGE 99-102
B2-S27	D/F ILLUMINATED BLADE SIGN ▪ QTY (1) 2'-0"W x 2'-8"H ▪ SIGN AREA: 5.3 SQ FT	PAGE 103, 105-106
B2-S28	D/F ILLUMINATED BLADE SIGN ▪ QTY (1) 2'-0"W x 2'-8"H ▪ SIGN AREA: 5.3 SQ FT	PAGE 104-105, 107
B2-S29	S/F NON-ILLUMINATED WALL SIGN ▪ QTY (1) 21'-4"W x 1'-6"H ▪ SIGN AREA: 32.0 SQ FT	PAGE 108-109
B2-S30	S/F NON-ILLUMINATED WALL SIGN ▪ QTY (1) 21'-4"W x 1'-6"H ▪ SIGN AREA: 32.0 SQ FT	PAGE 110-111
B2-S31	S/F ILLUMINATED WALL SIGN ▪ QTY (1) 15'-0"W x 2'-4 1/2"H ▪ SIGN AREA: 40.0 SQ FT	PAGE 112-114
B2-S32	S/F ILLUMINATED WALL SIGN ▪ QTY (1) 16'-0"W x 2'-6"H ▪ SIGN AREA: 40 SQ FT	PAGE 115-116
B2-S32.1	D/F NON-ILLUMINATED BLADE SIGN ▪ QTY (1) 4'-0" W x 1'-6" H ▪ SIGN AREA: 6.0 SQ FT	PAGE 116.1
B2-S33	S/F ILLUMINATED WALL SIGN ▪ QTY (1) 16'-0"W x 2'-6"H ▪ SIGN AREA: 40.0 SQ FT	PAGE 117-118
B2-S33.1	D/F NON- ILLUMINATED BLADE SIGN ▪ QTY (1) 4'-0" W x 1'-6" H ▪ SIGN AREA: 6.0 SQ FT	PAGE 118.1
B2-S34	S/F ILLUMINATED WALL SIGN ▪ QTY (1) 16'-0"W x 2'-6"H ▪ SIGN AREA: 40.0 SQ FT	PAGE 119-120
B2-S34.1	D/F NON-ILLUMINATED BLADE SIGN ▪ QTY (1) 4'-0" W x 1'-6" H ▪ SIGN AREA: 6.0 SQ FT	PAGE 120.1
B2-S35	S/F ILLUMINATED WALL SIGN ▪ QTY (1) 16'-0"W x 2'-6"H ▪ SIGN AREA: 40.0 SQ FT	PAGE 121-122
B2-S35.1	D/F NON-ILLUMINATED BLADE SIGN ▪ QTY (1) 4'-0" W x 1'-6" H ▪ SIGN AREA: 6.0 SQ FT	PAGE 122.1
B2-S36	S/F ILLUMINATED WALL SIGN ▪ QTY (1) 22'-0"W x 1'-6"H ▪ SIGN AREA: 33.0 SQ FT	PAGE 123-124
B2-S36.1	D/F NON-ILLUMINATED BLADE SIGN ▪ QTY (1) 4'-0" W x 1'-6" H ▪ SIGN AREA: 6.0 SQ FT	PAGE 124.1
B2-S37	S/F ILLUMINATED WALL SIGN ▪ QTY (1) 16'-0"W x 2'-6"H ▪ SIGN AREA: 40.0 SQ FT	PAGE 125-126
B2-S37.1	D/F NON-ILLUMINATED BLADE SIGN ▪ QTY (1) 4'-0" W x 1'-6" H ▪ SIGN AREA: 6.0 SQ FT	PAGE 126.1
B2-S38	S/F ILLUMINATED WALL SIGN ▪ QTY (1) 16'-0"W x 2'-6"H ▪ SIGN AREA: 40.0 SQ FT	PAGE 127-128
B2-S38.1	D/F NON-ILLUMINATED BLADE SIGN ▪ QTY (1) 4'-0" W x 1'-6" H ▪ SIGN AREA: 6.0 SQ FT	PAGE 128.1
B2-S39	S/F ILLUMINATED WALL SIGN ▪ QTY (1) 20'-0"W x 2'-0"H ▪ SIGN AREA: 40.0 SQ FT	PAGE 129-130
B2-S39.1	D/F NON-ILLUMINATED BLADE SIGN ▪ QTY (1) 4'-0" W x 1'-6" H ▪ SIGN AREA: 6.0 SQ FT	PAGE 130.1
B2-S40	S/F ILLUMINATED WALL SIGN ▪ QTY (1) 20'-0"W x 2'-0"H ▪ SIGN AREA: 40.0 SQ FT	PAGE 131-132
B2-S40.1	D/F NON-ILLUMINATED BLADE SIGN ▪ QTY (1) 4'-0" W x 1'-6" H ▪ SIGN AREA: 6.0 SQ FT	PAGE 132.1
B2-S41	S/F ILLUMINATED WALL SIGN ▪ QTY (1) 20'-0"W x 2'-0"H ▪ SIGN AREA: 40.0 SQ FT	PAGE 133-134
B2-S41.1	D/F NON-ILLUMINATED BLADE SIGN ▪ QTY (1) 4'-0" W x 1'-6" H ▪ SIGN AREA: 6 SQ FT	PAGE 134.1-134.2
B2-S41.2	D/F NON-ILLUMINATED BLADE SIGN ▪ QTY (1) 4'-0" W x 1'-6" H ▪ SIGN AREA: 6 SQ FT	PAGE 134.3

A DESIGN STUDIO

MAIN CONTACT
Gracia Mueller
360.929.3077

CREATIVE
Brody Lund
425.359.7380

Additional information:
adesignstudioseattle.com

Follow us on social:
@adesignstudioseattle

COPYRIGHT
All artwork contained herein is the copyrighted property of A Design Studio Seattle. This includes, but is not limited to, logos, specifications, artwork and engineering. Any usage beyond internal reviews shall require our appoval and a separate design fee paid to A Design Studio Seattle. Usage rights can also be purchased (limited or complete) for an additional fee. Any unlawful distribution of said artwork is a violation of federal copyright laws.

PROJECT NAME
Terrace Station

PROJECT #
20-004

ADDRESS
24015 Van Ry Blvd
Mountlake Terrace, WA 98043

DATE
12/10/20

VERSION NOTES

V1
V2
V3
V4
V5
V6
V7
V8
V9
V10
V11
V12
V13
V14
V15

PAGE SCALE
1/4" = 1'-0"

B2-S24 - ELEVATIONS

Sign Area: 48.6 Square Feet

B2 West Elevation

A DESIGN STUDIO

MAIN CONTACT
Gracia Mueller
360.929.3077

CREATIVE
Brody Lund
425.359.7380

Additional information:
adesignstudioseattle.com

Follow us on social:
@adesignstudioseattle

COPYRIGHT
All artwork contained herein is the copyrighted property of A Design Studio Seattle. This includes, but is not limited to, logos, specifications, artwork and engineering. Any usage beyond internal reviews shall require our appoval and a separate design fee paid to A Design Studio Seattle. Usage rights can also be purchased (limited or complete) for an additional fee. Any unlawful distribution of said artwork is a violation of federal copyright laws.

PROJECT NAME
Terrace Station

PROJECT #
20-004

ADDRESS
24015 Van Ry Blvd
Mountlake Terrace, WA 98043

DATE
12/10/20

VERSION NOTES

V1
V2
V3
V4
V5
V6
V7
V8
V9
V10
V11
V12
V13
V14
V15

PAGE SCALE
1/4" = 1'-0"

PAGE #
94

B2-S24 - DETAILS

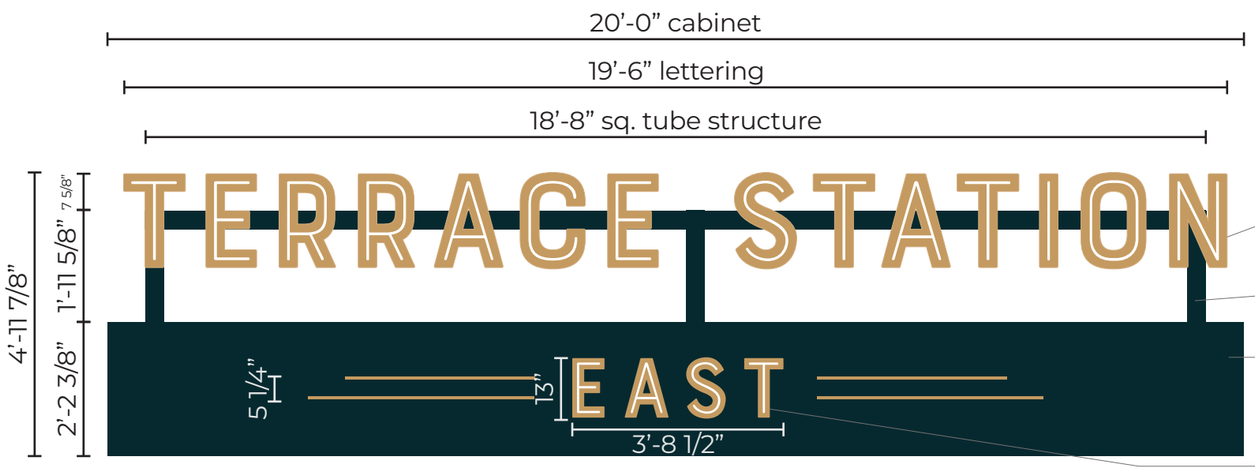

Face View

End View

3" Alum. open pan channel letters. Paint faces and returns gold. 12mm white single tube neon.

4" alum. square tube supports. Paint navy, satin finish.

8" alum sign cabinet. Removable faces. Paint navy, satin finish. 1/2" acrylic push thru graphics. Gold translucent vinyl applied to faces.

3" alum. open pan channel letters. Paint faces and returns gold. 8mm white single tube neon.

Internal power supply.

Drill & tap 3/8" x 4" bolts, 2 places minimum every 4'-0".

Sign B2-S24: *Manufacture & install (1) single face illuminated canopy sign with neon open pan channel lettering.*

Sign Area: 99.8 Square Feet

CLIENT TO PROVIDE
20 AMP / 120 VOLT
DEDICATED SIGN CIRCUIT WITHIN
6 FT OF SIGN LOCATION

A DESIGN STUDIO

MAIN CONTACT
Gracia Mueller
360.929.3077

CREATIVE
Brody Lund
425.359.7380

Additional information:
adesignstudioseattle.com

Follow us on social:
@adesignstudioseattle

COPYRIGHT
All artwork contained herein is the copyrighted property of A Design Studio Seattle. This includes, but is not limited to, logos, specifications, artwork and engineering. Any usage beyond internal reviews shall require our appoval and a separate design fee paid to A Design Studio Seattle. Usage rights can also be purchased (limited or complete) for an additional fee. Any unlawful distribution of said artwork is a violation of federal copyright laws.

PROJECT NAME
Terrace Station

PROJECT #
20-004

ADDRESS
24015 Van Ry Blvd
Mountlake Terrace, WA 98043

DATE
12/10/20

VERSION NOTES

V1
V2
V3
V4
V5
V6
V7
V8
V9
V10
V11
V12
V13
V14
V15

PAGE SCALE
3/8" = 1'-0"

PAGE #
95

B2-S24 - ATTACHMENT DETAILS

Glass to be installed AFTER knife plates: openings cut into glass to accomodate knife plates.

Sign Area: 99.8 Square Feet

Sign Weight: 200 lbs

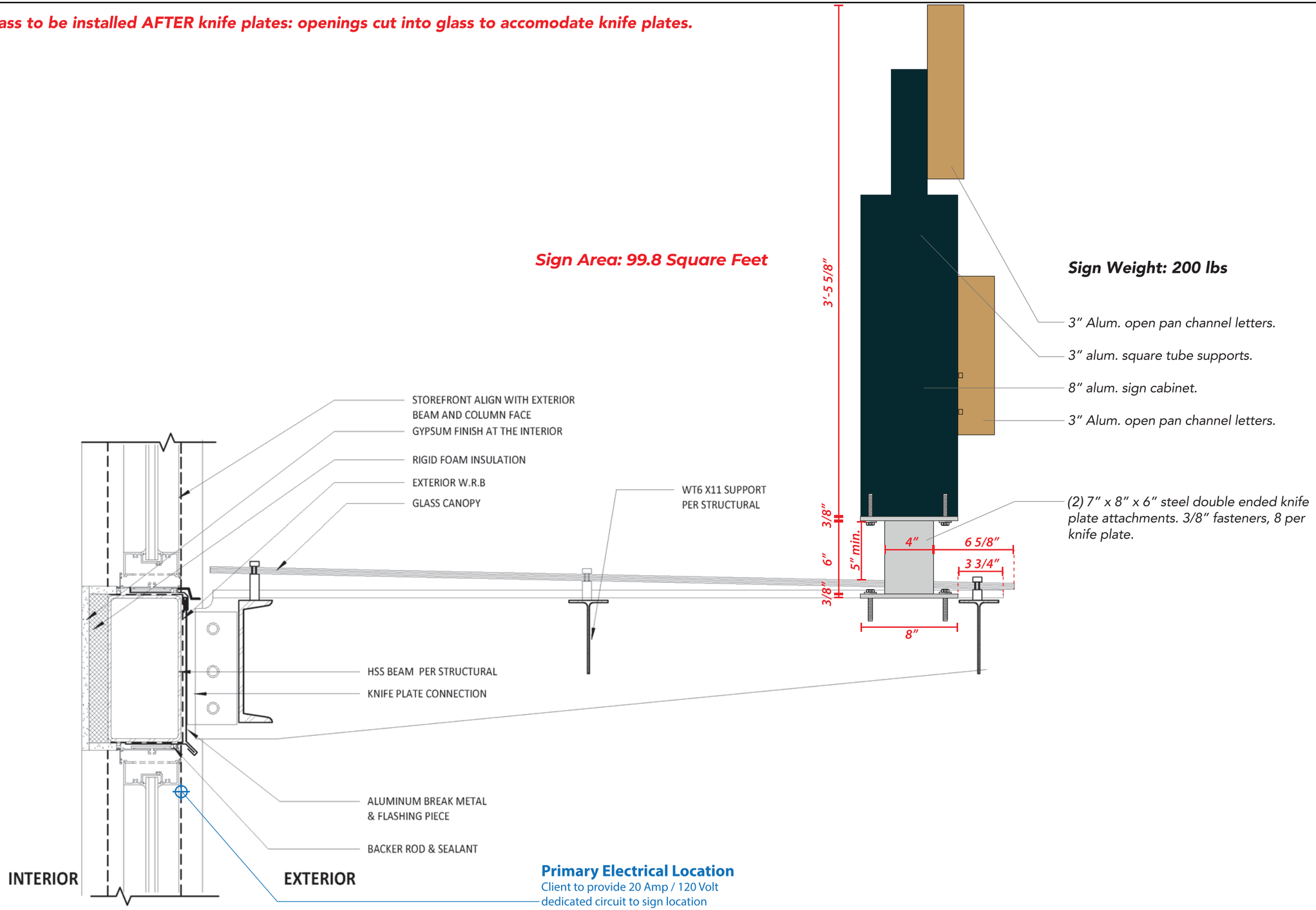

1 BEAM DETAIL AT VESTIBULE ENTRY CANOPY

SCALE: 1 1/2" = 1'-0"

A DESIGN STUDIO

MAIN CONTACT
Gracia Mueller
360.929.3077

CREATIVE
Brody Lund
425.359.7380

Additional information:
adesignstudioseattle.com

Follow us on social:
@adesignstudioseattle

COPYRIGHT
All artwork contained herein is the copyrighted property of A Design Studio Seattle. This includes, but is not limited to, logos, specifications, artwork and engineering. Any usage beyond internal reviews shall require our appoval and a separate design fee paid to A Design Studio Seattle. Usage rights can also be purchased (limited or complete) for an additional fee. Any unlawful distribution of said artwork is a violation of federal copyright laws.

PROJECT NAME
Terrace Station

PROJECT #
20-004

ADDRESS
24015 Van Ry Blvd
Mountlake Terrace, WA 98043

DATE
12/10/20

VERSION NOTES

V1
V2
V3
V4
V5
V6
V7
V8
V9
V10
V11
V12
V13
V14
V15

PAGE SCALE
As Noted

PAGE #
96

B2-S24 - ATTACHMENT DETAILS

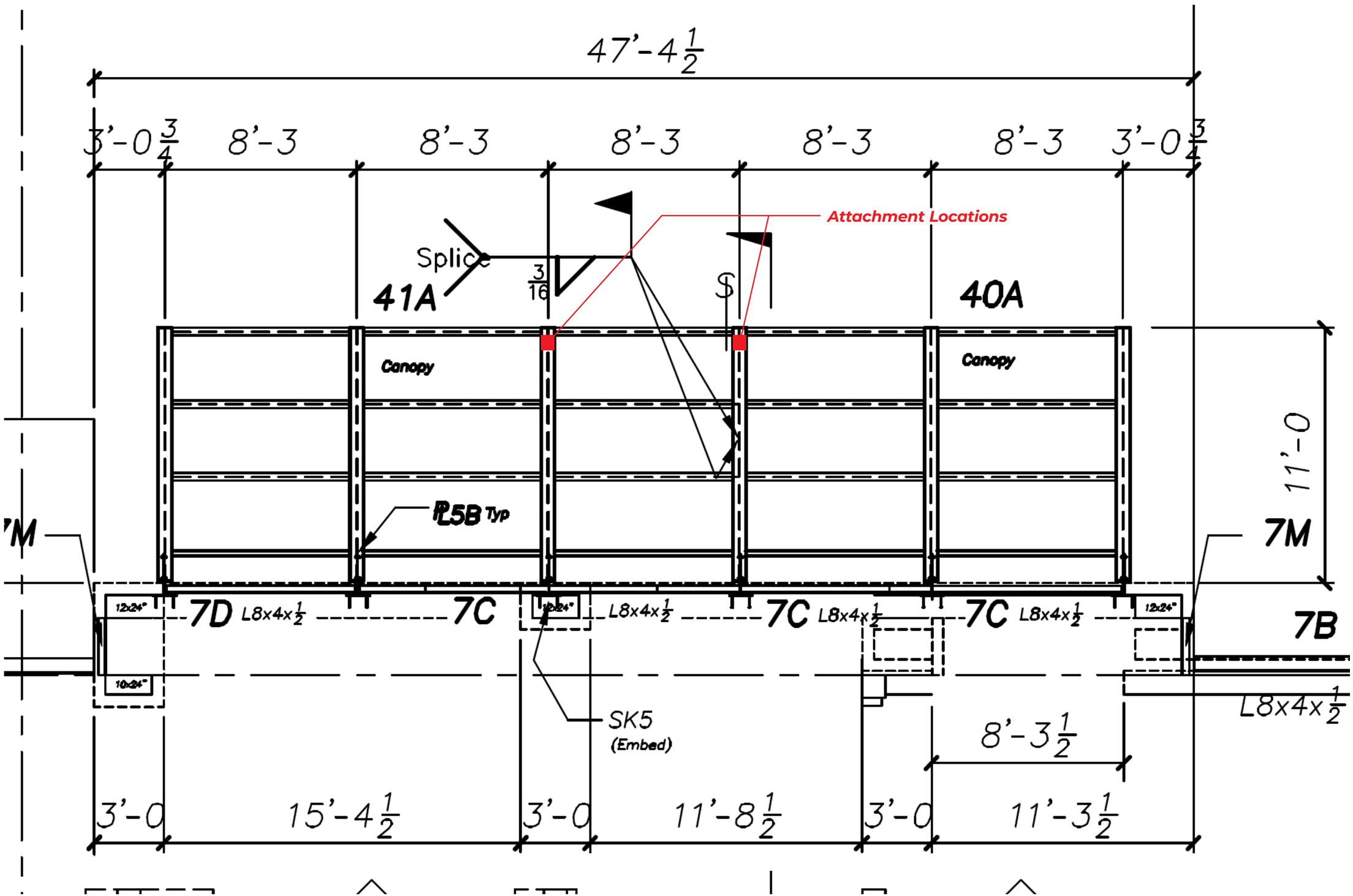

A DESIGN STUDIO

MAIN CONTACT
Gracia Mueller
360.929.3077

CREATIVE
Brody Lund
425.359.7380

Additional information:
adesignstudioseattle.com

Follow us on social:
@adesignstudioseattle

COPYRIGHT
All artwork contained herein is the copyrighted property of A Design Studio Seattle. This includes, but is not limited to, logos, specifications, artwork and engineering. Any usage beyond internal reviews shall require our appoval and a separate design fee paid to A Design Studio Seattle. Usage rights can also be purchased (limited or complete) for an additional fee. Any unlawful distribution of said artwork is a violation of federal copyright laws.

PROJECT NAME
Terrace Station

PROJECT #
20-004

ADDRESS
24015 Van Ry Blvd
Mountlake Terrace, WA 98043

DATE
12/10/20

VERSION NOTES

V1
V2
V3
V4
V5
V6
V7
V8
V9
V10
V11
V12
V13
V14
V15

PAGE SCALE
1/4" = 1'-0"

PAGE #
96.1

B2-S24 - ATTACHMENT DETAILS

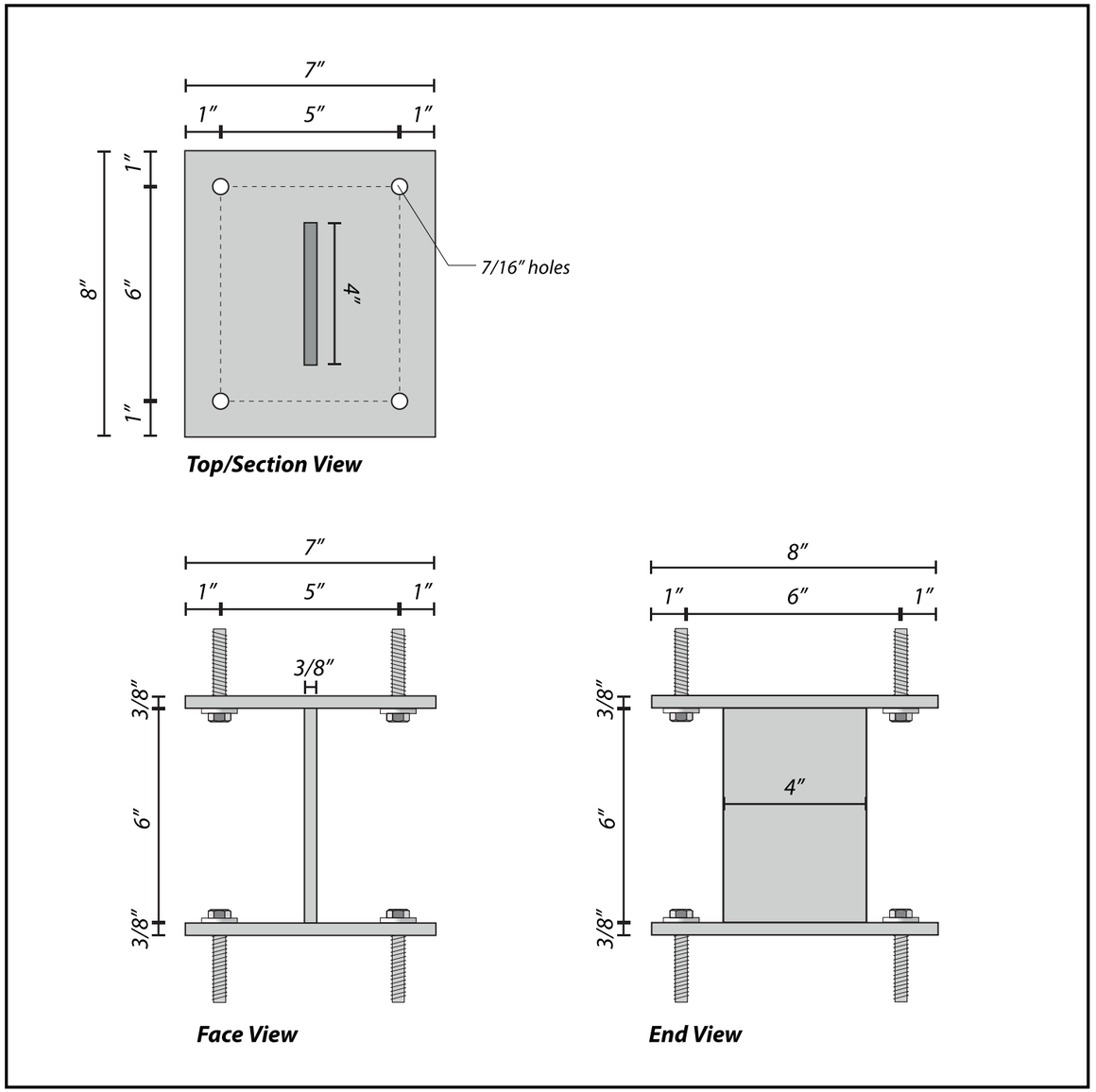

3/8″ x 7″ x 8″ Steel Double Ended Knife Plate Detail

Scale: 3″=1′-0″

A DESIGN STUDIO

MAIN CONTACT
Gracia Mueller
360.929.3077

CREATIVE
Brody Lund
425.359.7380

Additional information:
adesignstudioseattle.com

Follow us on social:
@adesignstudioseattle

COPYRIGHT
All artwork contained herein is the copyrighted property of A Design Studio Seattle. This includes, but is not limited to, logos, specifications, artwork and engineering. Any usage beyond internal reviews shall require our appoval and a separate design fee paid to A Design Studio Seattle. Usage rights can also be purchased (limited or complete) for an additional fee. Any unlawful distribution of said artwork is a violation of federal copyright laws.

PROJECT NAME
Terrace Station

PROJECT #
20-004

ADDRESS
24015 Van Ry Blvd
Mountlake Terrace, WA 98043

DATE
12/10/20

VERSION NOTES

V1
V2
V3
V4
V5
V6
V7
V8
V9
V10
V11
V12
V13
V14
V15

PAGE SCALE
As Noted

PAGE #
97

B2-S25 - ELEVATIONS

Sign Area: 115.2 Square Feet

B2 South Elevation

A DESIGN STUDIO

MAIN CONTACT
Gracia Mueller
360.929.3077

CREATIVE
Brody Lund
425.359.7380

Additional information:
adesignstudioseattle.com

Follow us on social:
@adesignstudioseattle

COPYRIGHT
All artwork contained herein is the copyrighted property of A Design Studio Seattle. This includes, but is not limited to, logos, specifications, artwork and engineering. Any usage beyond internal reviews shall require our appoval and a separate design fee paid to A Design Studio Seattle. Usage rights can also be purchased (limited or complete) for an additional fee. Any unlawful distribution of said artwork is a violation of federal copyright laws.

PROJECT NAME
Terrace Station

PROJECT #
20-004

ADDRESS
24015 Van Ry Blvd
Mountlake Terrace, WA 98043

DATE
12/10/20

VERSION NOTES

V1
V2
V3
V4
V5
V6
V7
V8
V9
V10
V11
V12
V13
V14
V15

PAGE SCALE
1/4" = 1'-0"

PAGE #
98

B2-S26.1 - ELEVATION

Sign Area: 115.2 Square Feet

B2 North Elevation

A DESIGN STUDIO

MAIN CONTACT
Gracia Mueller
360.929.3077

CREATIVE
Brody Lund
425.359.7380

Additional information:
adesignstudioseattle.com

Follow us on social:
@adesignstudioseattle

COPYRIGHT
All artwork contained herein is the copyrighted property of A Design Studio Seattle. This includes, but is not limited to, logos, specifications, artwork and engineering. Any usage beyond internal reviews shall require our appoval and a separate design fee paid to A Design Studio Seattle. Usage rights can also be purchased (limited or complete) for an additional fee. Any unlawful distribution of said artwork is a violation of federal copyright laws.

PROJECT NAME
Terrace Station

PROJECT #
20-004

ADDRESS
24015 Van Ry Blvd
Mountlake Terrace, WA 98043

DATE
12/10/20

VERSION NOTES

V1
V2
V3
V4
V5
V6
V7
V8
V9
V10
V11
V12
V13
V14
V15

PAGE SCALE
1/4" = 1'-0"

PAGE #
99

B2-S26.2 - ELEVATION

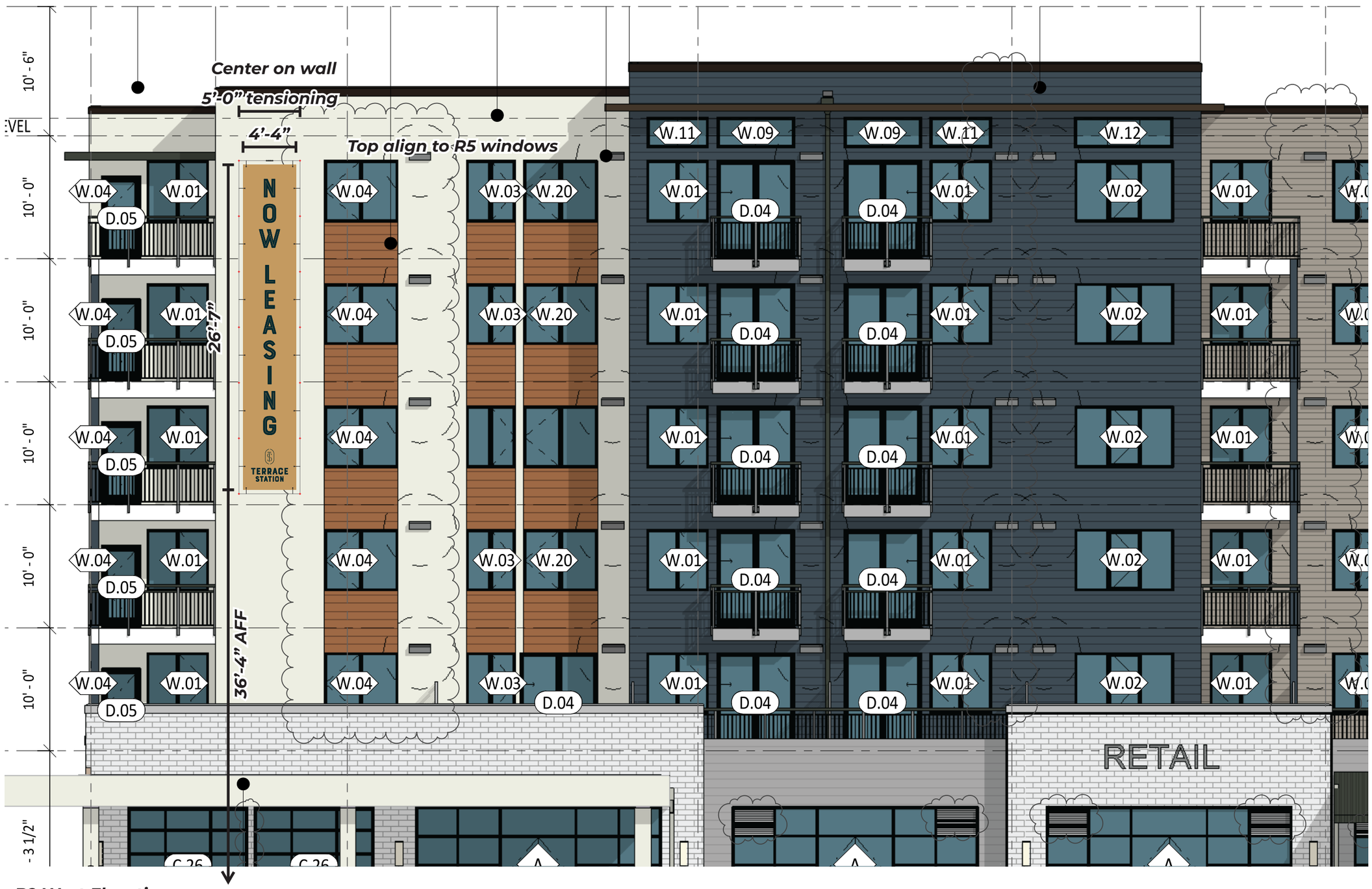

B2 West Elevation

A DESIGN STUDIO

MAIN CONTACT
Gracia Mueller
360.929.3077

CREATIVE
Brody Lund
425.359.7380

Additional information:
adesignstudioseattle.com

Follow us on social:
@adesignstudioseattle

COPYRIGHT
All artwork contained herein is the copyrighted property of A Design Studio Seattle. This includes, but is not limited to, logos, specifications, artwork and engineering. Any usage beyond internal reviews shall require our appoval and a separate design fee paid to A Design Studio Seattle. Usage rights can also be purchased (limited or complete) for an additional fee. Any unlawful distribution of said artwork is a violation of federal copyright laws.

PROJECT NAME
Terrace Station

PROJECT #
20-004

ADDRESS
24015 Van Ry Blvd
Mountlake Terrace, WA 98043

DATE
12/10/20

VERSION NOTES

V1
V2
V3
V4
V5
V6
V7
V8
V9
V10
V11
V12
V13
V14
V15

PAGE SCALE
1/8" = 1'-0"

PAGE #
100

B2-S25 & B2-S26 - DETAILS

Sign Area: 115.2 Square Feet

Signs B2-S25 & B2-S26: *Manufacture & install (2) single face non-illuminated temporary banners.*

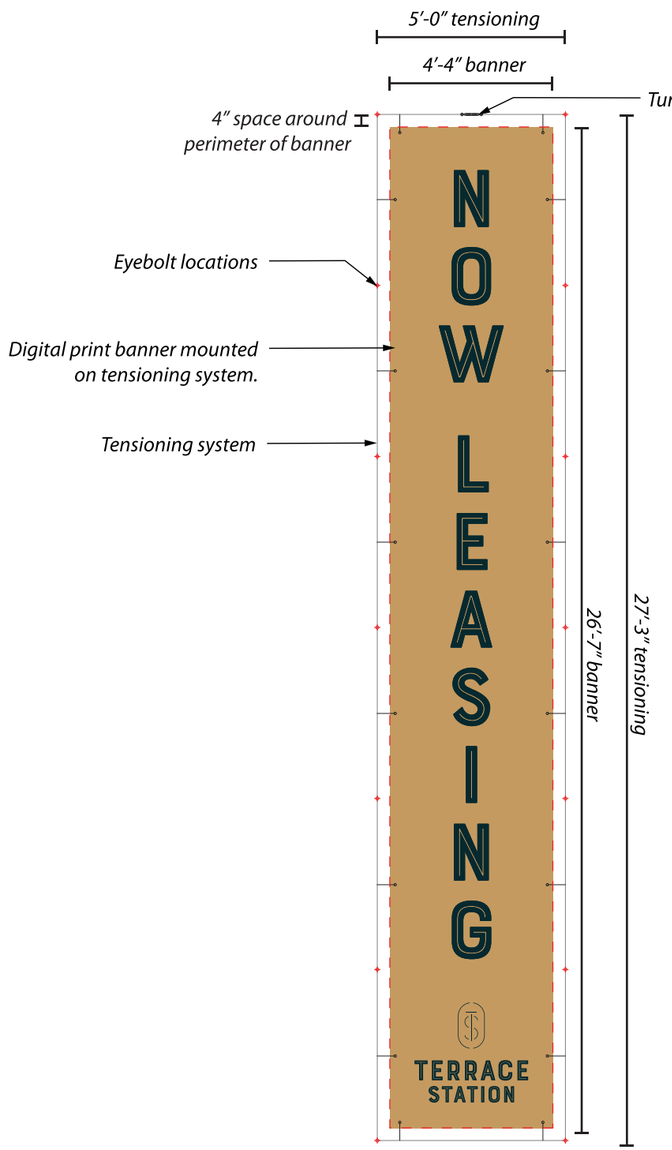

Front View

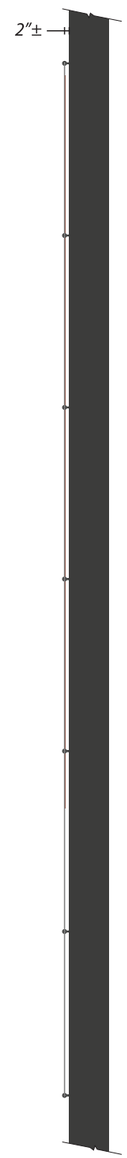

End View

Banner Installation
Required Materials:
- *Eye Bolts*
- *Tenson Cable*
- *Turnbuckle*

Eye Bolts To Be Provided By Others.

Banners Attach to Cable Tension System With Quick Lock Fasteners.

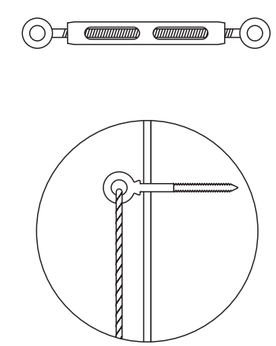

Tensioning System Components

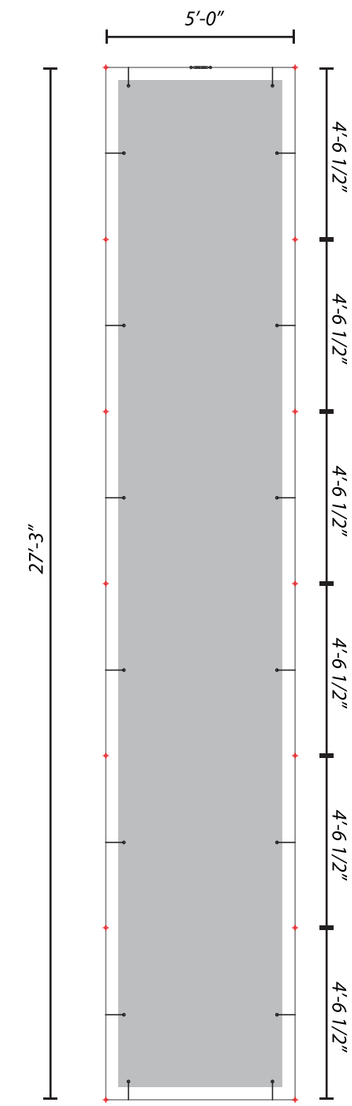

Eyebolt Locations

A DESIGN STUDIO

MAIN CONTACT
Gracia Mueller
360.929.3077

CREATIVE
Brody Lund
425.359.7380

Additional information:
adesignstudioseattle.com

Follow us on social:
@adesignstudioseattle

COPYRIGHT
All artwork contained herein is the copyrighted property of A Design Studio Seattle. This includes, but is not limited to, logos, specifications, artwork and engineering. Any usage beyond internal reviews shall require our appoval and a separate design fee paid to A Design Studio Seattle. Usage rights can also be purchased (limited or complete) for an additional fee. Any unlawful distribution of said artwork is a violation of federal copyright laws.

PROJECT NAME
Terrace Station

PROJECT #
20-004

ADDRESS
24015 Van Ry Blvd
Mountlake Terrace, WA 98043

DATE
12/10/20

VERSION NOTES

V1
V2
V3
V4
V5
V6
V7
V8
V9
V10
V11
V12
V13
V14
V15

PAGE SCALE
1/4" = 1'-0"

PAGE #
101

B2-S25 & B2-S26 - ATTACHMENT DETAILS

NOTES:
1. FRAMING PER ARCH
2. ALIGN FASTENERS w/ BATTENS & STUDS

EXTERIOR

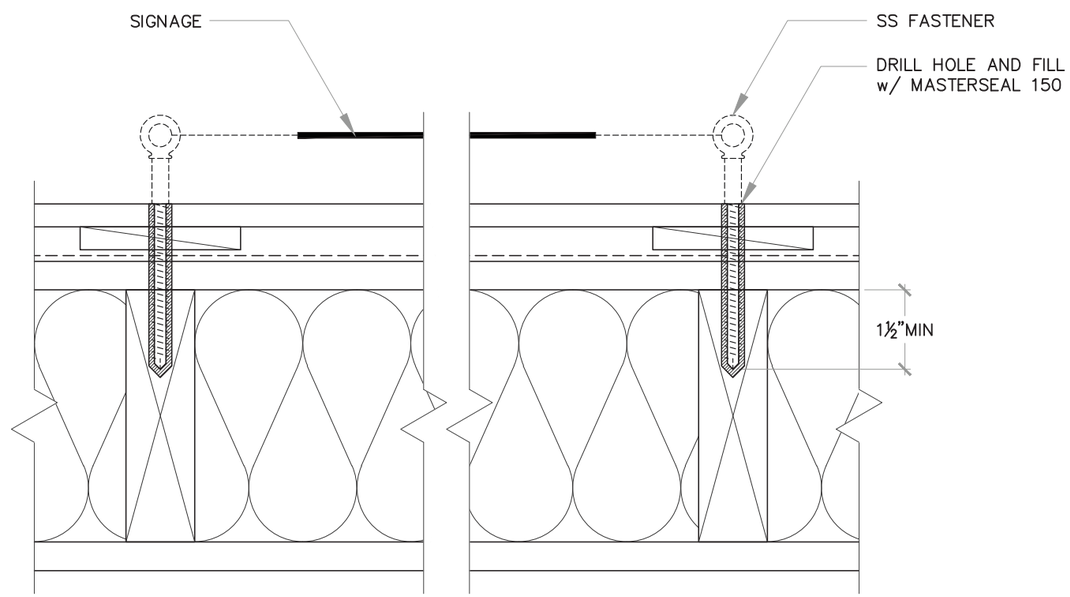

INTERIOR

229 (TYPICAL)

PLAN: TEMPORARY SIGNAGE ATTACHMENT

SCALE: NTS

A DESIGN STUDIO

MAIN CONTACT
Gracia Mueller
360.929.3077

CREATIVE
Brody Lund
425.359.7380

Additional information:
adesignstudioseattle.com

Follow us on social:
@adesignstudioseattle

COPYRIGHT
All artwork contained herein is the copyrighted property of A Design Studio Seattle. This includes, but is not limited to, logos, specifications, artwork and engineering. Any usage beyond internal reviews shall require our appoval and a separate design fee paid to A Design Studio Seattle. Usage rights can also be purchased (limited or complete) for an additional fee. Any unlawful distribution of said artwork is a violation of federal copyright laws.

PROJECT NAME
Terrace Station

PROJECT #
20-004

ADDRESS
24015 Van Ry Blvd
Mountlake Terrace, WA 98043

DATE
12/10/20

VERSION NOTES

V1
V2
V3
V4
V5
V6
V7
V8
V9
V10
V11
V12
V13
V14
V15

PAGE SCALE
As Noted

PAGE #
102

B2-S27 - ELEVATIONS

Sign Area: 5.3 Square Feet

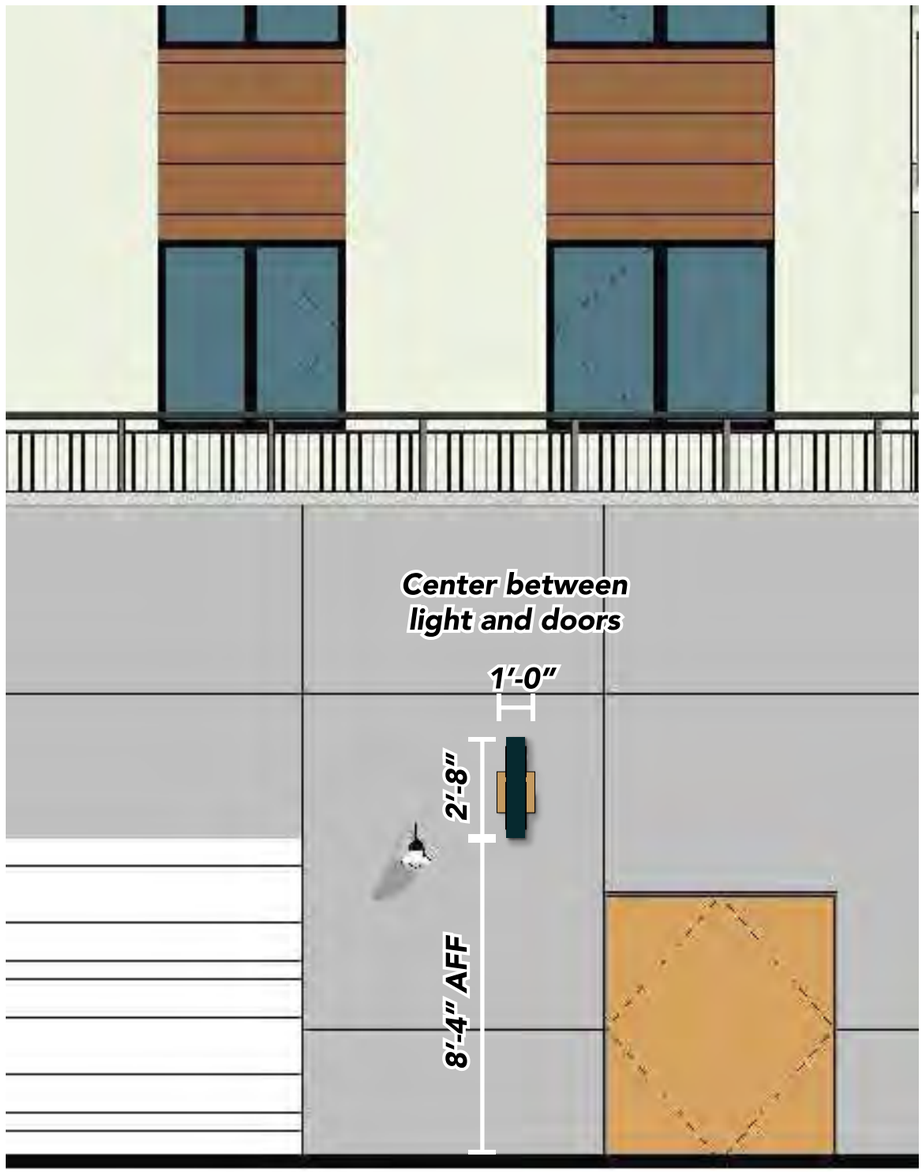

B2 East Elevation

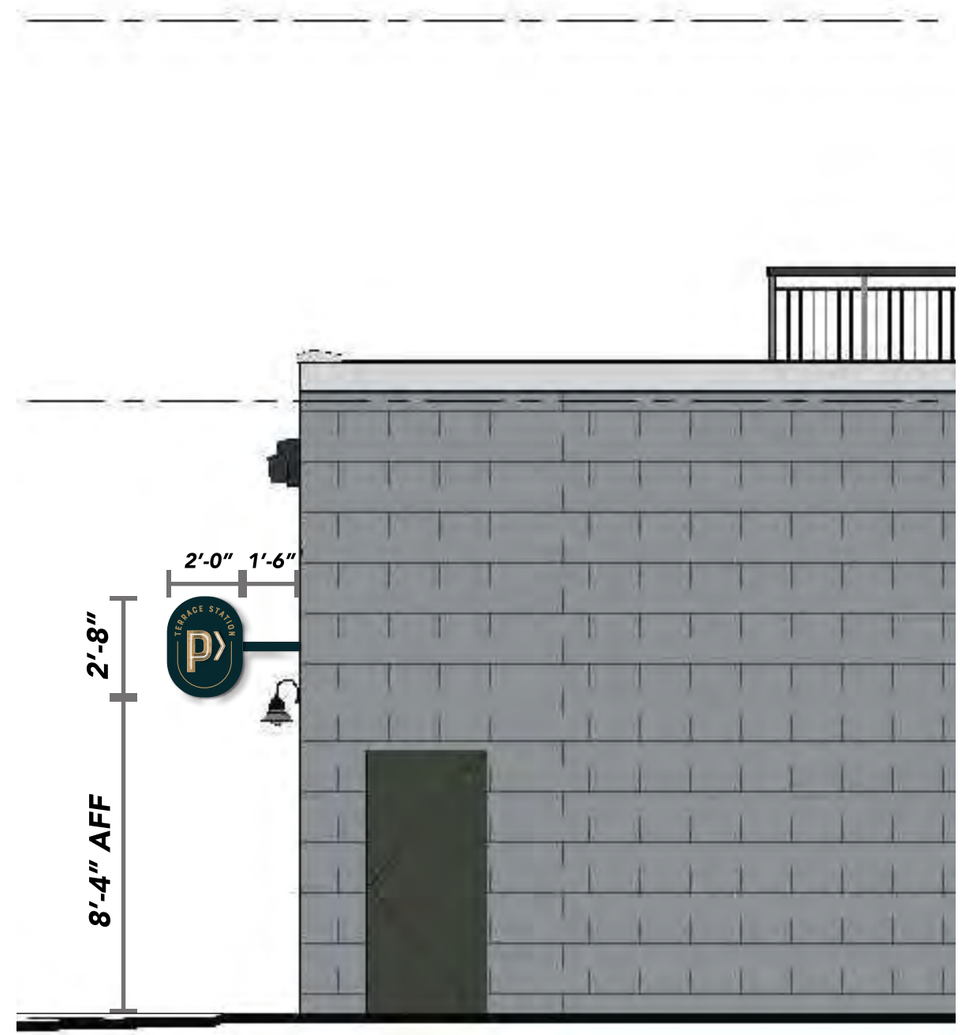

B2 North Elevation

A DESIGN STUDIO

MAIN CONTACT
Gracia Mueller
360.929.3077

CREATIVE
Brody Lund
425.359.7380

Additional information:
adesignstudioseattle.com

Follow us on social:
@adesignstudioseattle

COPYRIGHT
All artwork contained herein is the copyrighted property of A Design Studio Seattle. This includes, but is not limited to, logos, specifications, artwork and engineering. Any usage beyond internal reviews shall require our appoval and a separate design fee paid to A Design Studio Seattle. Usage rights can also be purchased (limited or complete) for an additional fee. Any unlawful distribution of said artwork is a violation of federal copyright laws.

PROJECT NAME
Terrace Station

PROJECT #
20-004

ADDRESS
24015 Van Ry Blvd
Mountlake Terrace, WA 98043

DATE
12/10/20

VERSION NOTES

V1
V2
V3
V4
V5
V6
V7
V8
V9
V10
V11
V12
V13
V14
V15

PAGE SCALE
1/4" = 1'-0"

PAGE #

B2-S28 - ELEVATIONS

Sign Area: 5.3 Square Feet

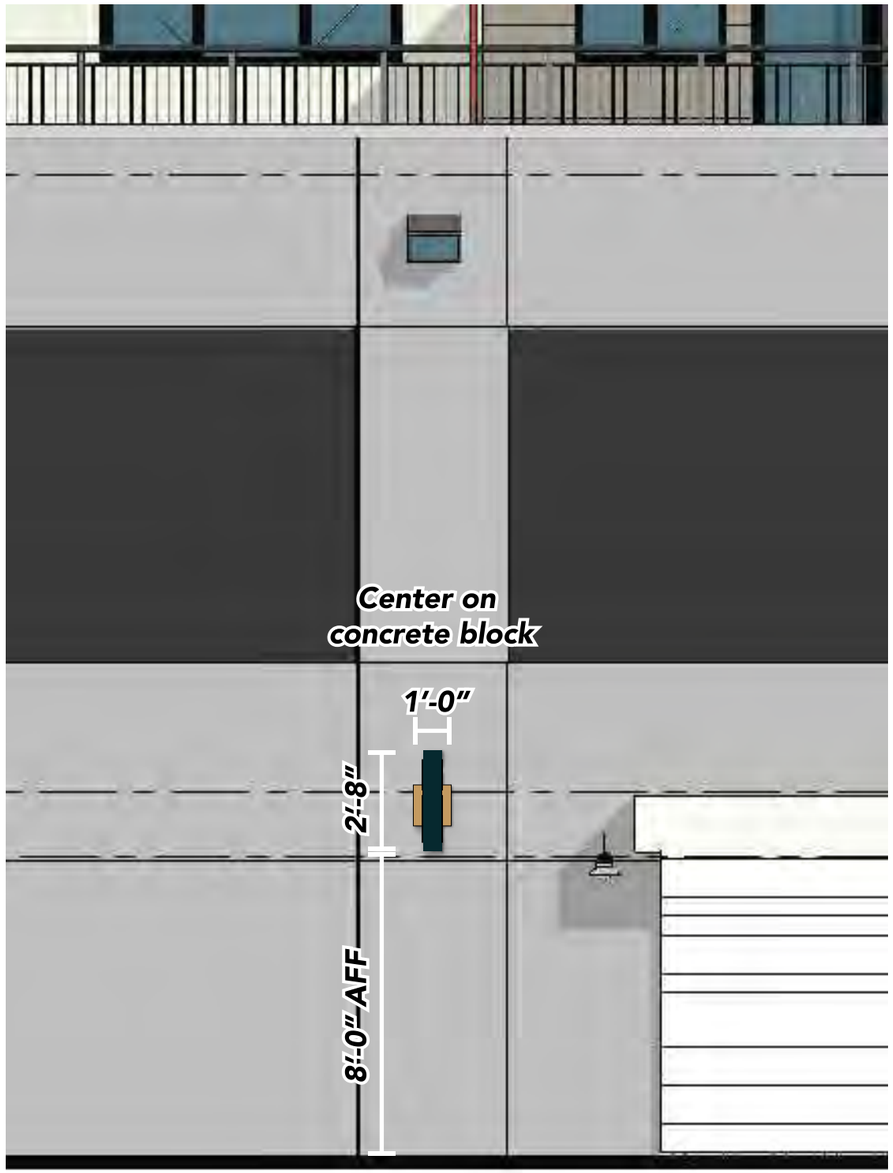

B2 East Elevation

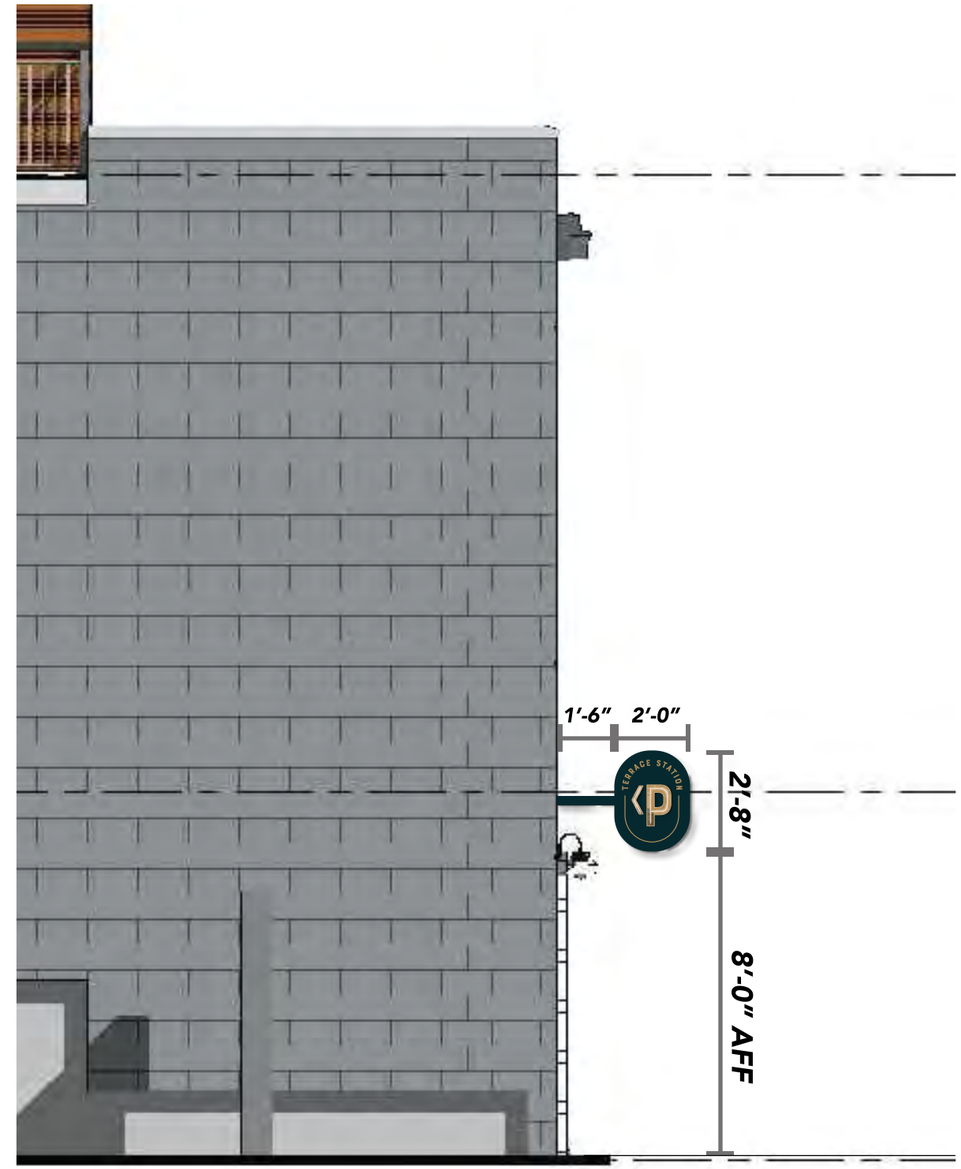

B2 South Elevation

A DESIGN STUDIO

MAIN CONTACT
Gracia Mueller
360.929.3077

CREATIVE
Brody Lund
425.359.7380

Additional information:
adesignstudioseattle.com

Follow us on social:
@adesignstudioseattle

COPYRIGHT
All artwork contained herein is the copyrighted property of A Design Studio Seattle. This includes, but is not limited to, logos, specifications, artwork and engineering. Any usage beyond internal reviews shall require our appoval and a separate design fee paid to A Design Studio Seattle. Usage rights can also be purchased (limited or complete) for an additional fee. Any unlawful distribution of said artwork is a violation of federal copyright laws.

PROJECT NAME
Terrace Station

PROJECT #
20-004

ADDRESS
24015 Van Ry Blvd
Mountlake Terrace, WA 98043

DATE
12/10/20

VERSION NOTES

V1
V2
V3
V4
V5
V6
V7
V8
V9
V10
V11
V12
V13
V14
V15

PAGE SCALE
1/4" = 1'-0"

PAGE #
104

B2-S27 & B2-S28 - DETAILS

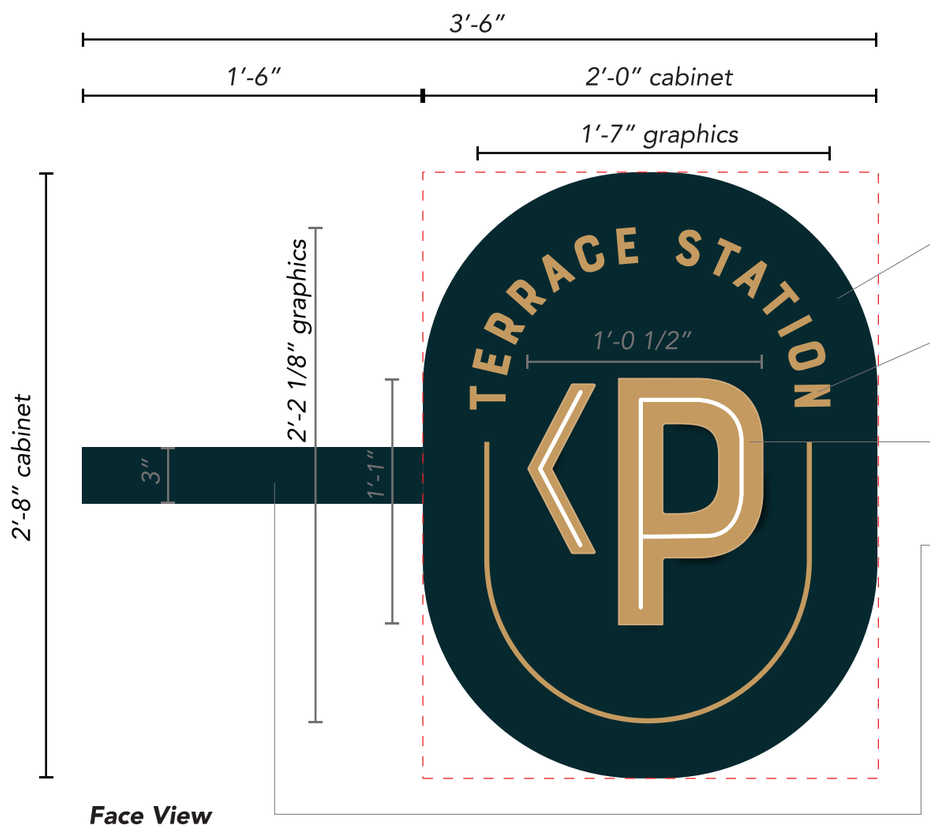

Face View

6″ deep fabricated alum. cabinet. Faces and returns painted navy, satin finish. Removable faces.

1/4″ clear acrylic push through graphics with gold translucent vinyl applied to faces. Illuminate with white LEDs.

3″ Alum. open pan channel graphics. Paint faces and returns gold. 8mm white single tube neon.

3″ alum. square tube arm. Paint navy, satin finish.

Attach with 3/8″ x 8″ x 8″ square tube knife plate.

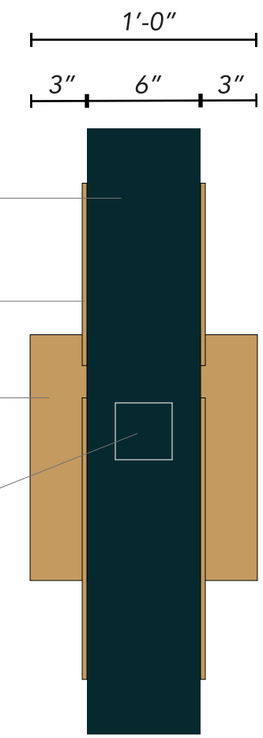

End View

Signs B2-S27 & B2-S28: *Manufacture & install (2) double face illuminated blade signs with neon open pan channel graphics.*

Sign Area: 5.3 Square Feet

Reverse Face View (NTS)

CLIENT TO PROVIDE
20 AMP / 120 VOLT
DEDICATED SIGN CIRCUIT WITHIN
6 FT OF SIGN LOCATION

A DESIGN STUDIO

MAIN CONTACT
Gracia Mueller
360.929.3077

CREATIVE
Brody Lund
425.359.7380

Additional information:
adesignstudioseattle.com

Follow us on social:
@adesignstudioseattle

COPYRIGHT
All artwork contained herein is the copyrighted property of A Design Studio Seattle. This includes, but is not limited to, logos, specifications, artwork and engineering. Any usage beyond internal reviews shall require our appoval and a separate design fee paid to A Design Studio Seattle. Usage rights can also be purchased (limited or complete) for an additional fee. Any unlawful distribution of said artwork is a violation of federal copyright laws.

PROJECT NAME
Terrace Station

PROJECT #
20-004

ADDRESS
24015 Van Ry Blvd
Mountlake Terrace, WA 98043

DATE
12/10/20

VERSION NOTES

V1
V2
V3
V4
V5
V6
V7
V8
V9
V10
V11
V12
V13
V14
V15

PAGE SCALE
1 1/2″ = 1′-0″

PAGE #
105

B2-S27 - ATTACHMENT DETAILS

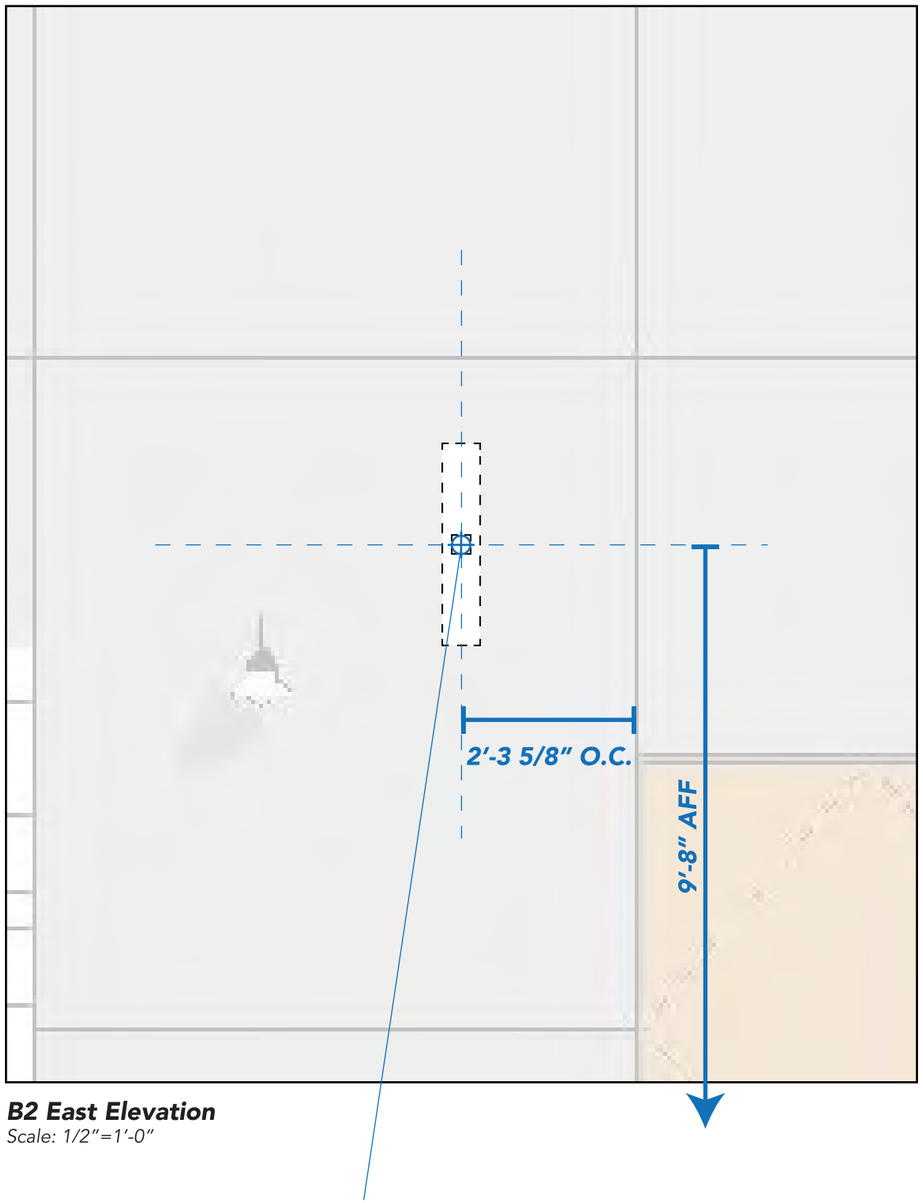

B2 East Elevation
Scale: 1/2"=1'-0"

Primary Electrical Location
Client to provide 20 Amp / 120 Volt dedicated circuit to sign location

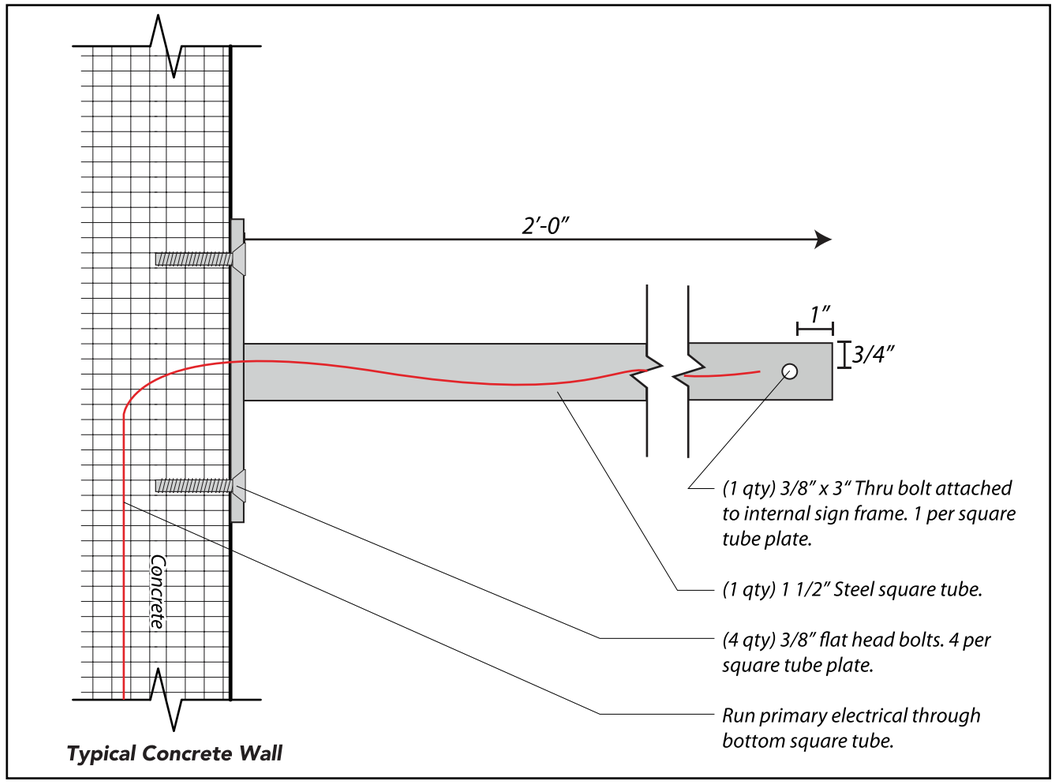

Square Tube Plate Install Detail
Scale: 3"=1'-0"

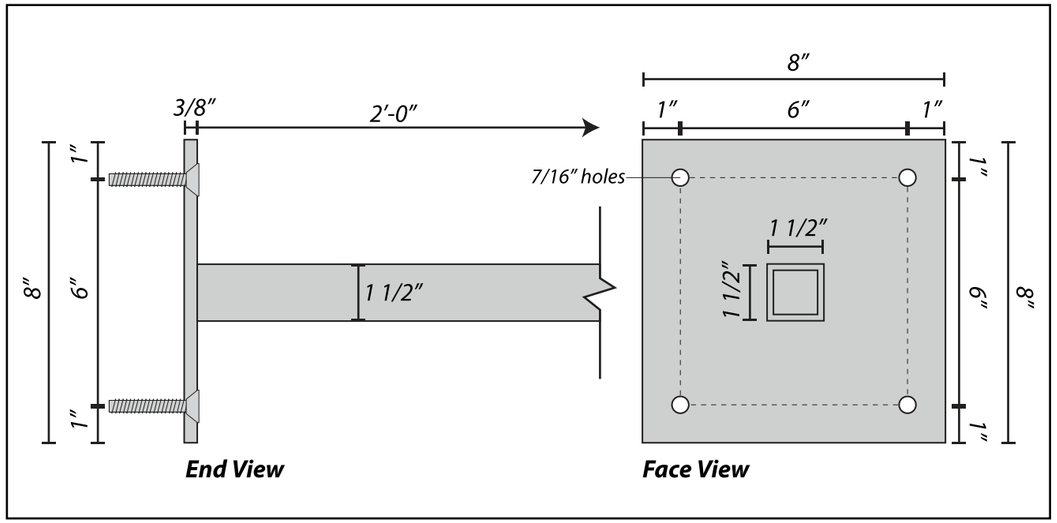

3/8" x 8" x 8" Steel Square Tube Plate Detail
Scale: 3"=1'-0"

A DESIGN STUDIO

MAIN CONTACT
Gracia Mueller
360.929.3077

CREATIVE
Brody Lund
425.359.7380

Additional information:
adesignstudioseattle.com

Follow us on social:
@adesignstudioseattle

COPYRIGHT
All artwork contained herein is the copyrighted property of A Design Studio Seattle. This includes, but is not limited to, logos, specifications, artwork and engineering. Any usage beyond internal reviews shall require our appoval and a separate design fee paid to A Design Studio Seattle. Usage rights can also be purchased (limited or complete) for an additional fee. Any unlawful distribution of said artwork is a violation of federal copyright laws.

PROJECT NAME
Terrace Station

PROJECT #
20-004

ADDRESS
24015 Van Ry Blvd
Mountlake Terrace, WA 98043

DATE
12/10/20

VERSION NOTES
V1
V2
V3
V4
V5
V6
V7
V8
V9
V10
V11
V12
V13
V14
V15

PAGE SCALE
As Noted

PAGE #
106

B2-S28 - ATTACHMENT DETAILS

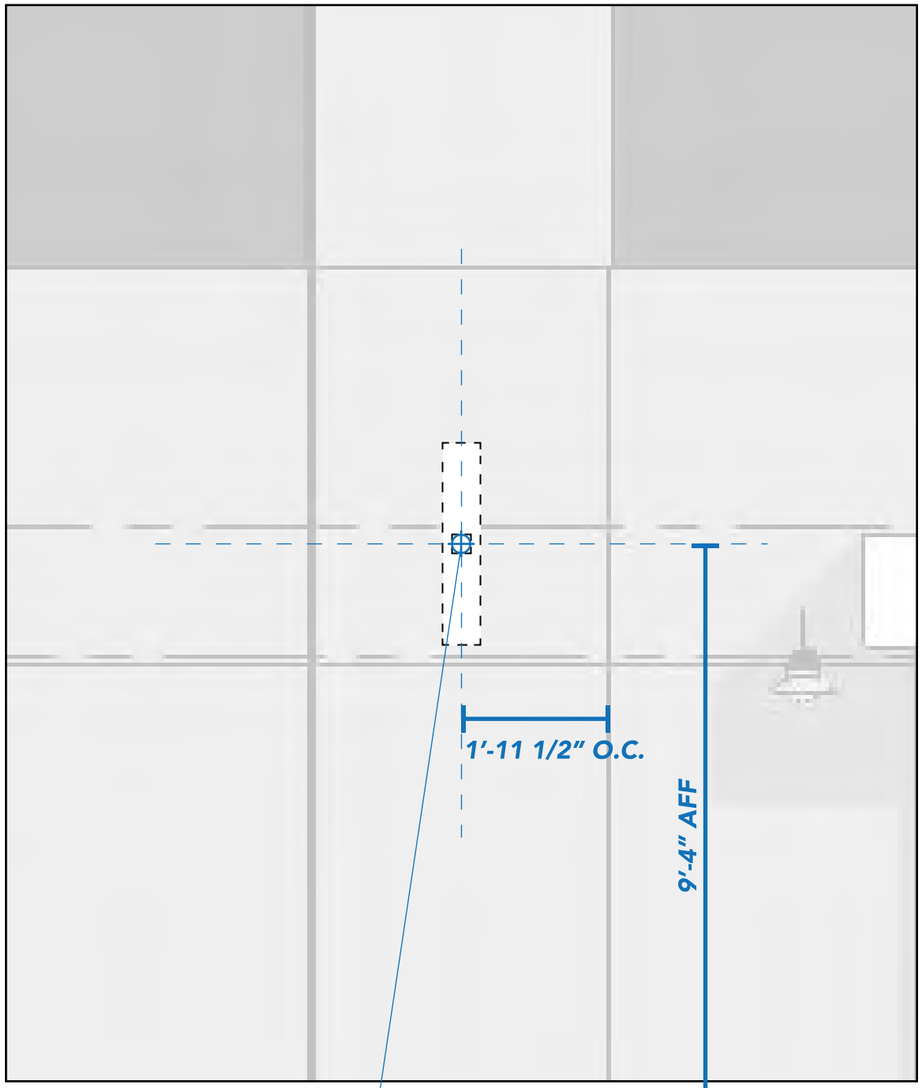

B2 East Elevation
Scale: 1/2"=1'-0"

Primary Electrical Location
Client to provide 20 Amp / 120 Volt dedicated circuit to sign location

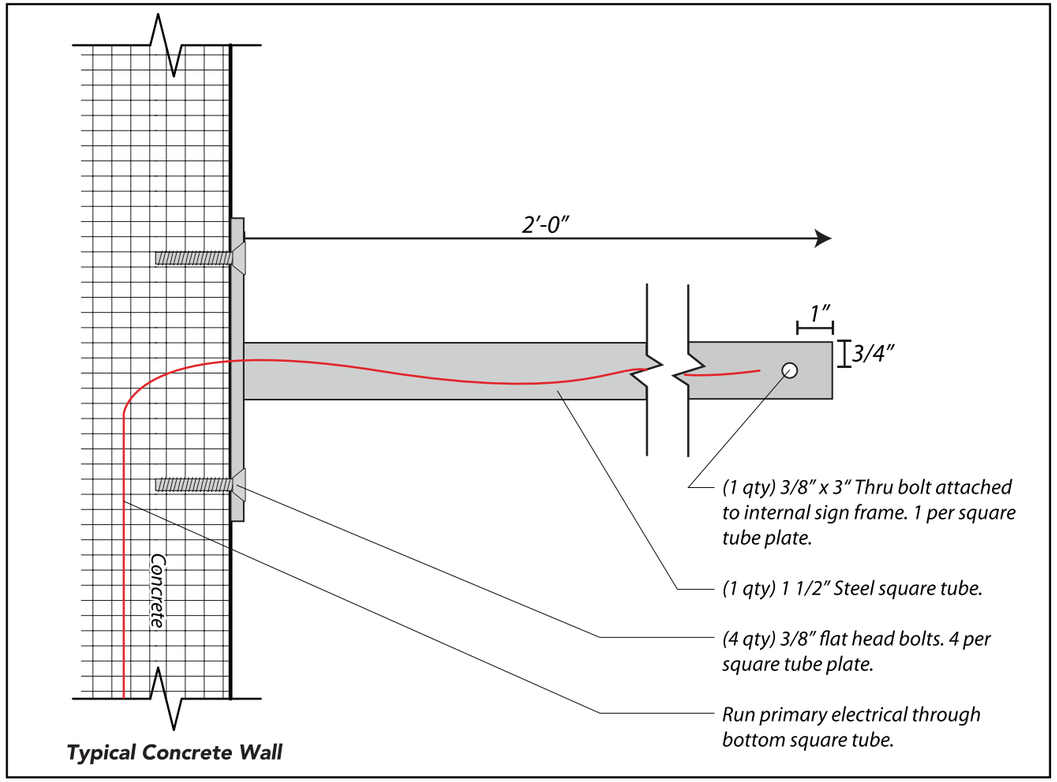

Square Tube Plate Install Detail
Scale: 3"=1'-0"

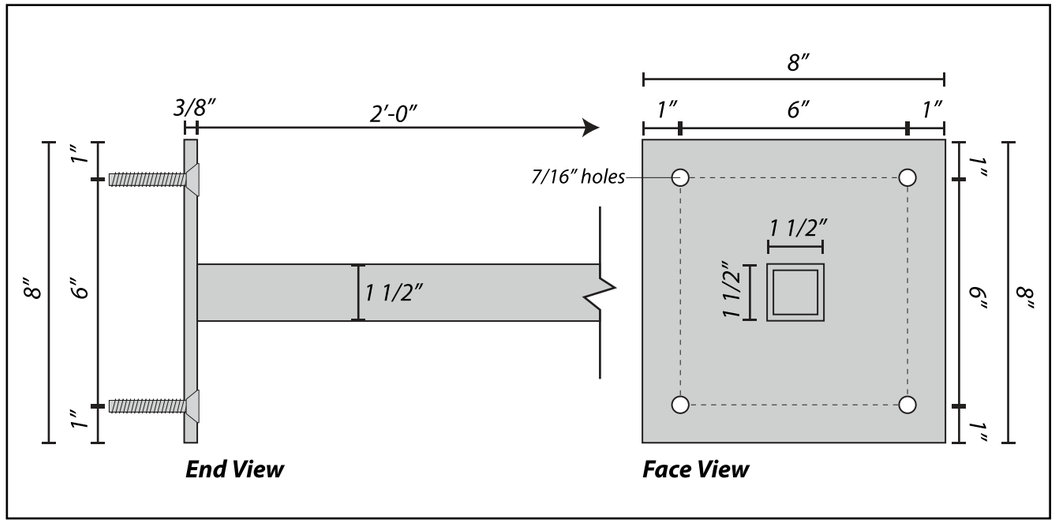

3/8" x 8" x 8" Steel Square Tube Plate Detail
Scale: 3"=1'-0"

A DESIGN STUDIO

MAIN CONTACT
Gracia Mueller
360.929.3077

CREATIVE
Brody Lund
425.359.7380

Additional information:
adesignstudioseattle.com

Follow us on social:
@adesignstudioseattle

COPYRIGHT
All artwork contained herein is the copyrighted property of A Design Studio Seattle. This includes, but is not limited to, logos, specifications, artwork and engineering. Any usage beyond internal reviews shall require our appoval and a separate design fee paid to A Design Studio Seattle. Usage rights can also be purchased (limited or complete) for an additional fee. Any unlawful distribution of said artwork is a violation of federal copyright laws.

PROJECT NAME
Terrace Station

PROJECT #
20-004

ADDRESS
24015 Van Ry Blvd
Mountlake Terrace, WA 98043

DATE
12/10/20

VERSION NOTES

V1
V2
V3
V4
V5
V6
V7
V8
V9
V10
V11
V12
V13
V14
V15

PAGE SCALE
As Noted

PAGE #

B2-S29 - ELEVATIONS

Sign Area: 32.0 Square Feet

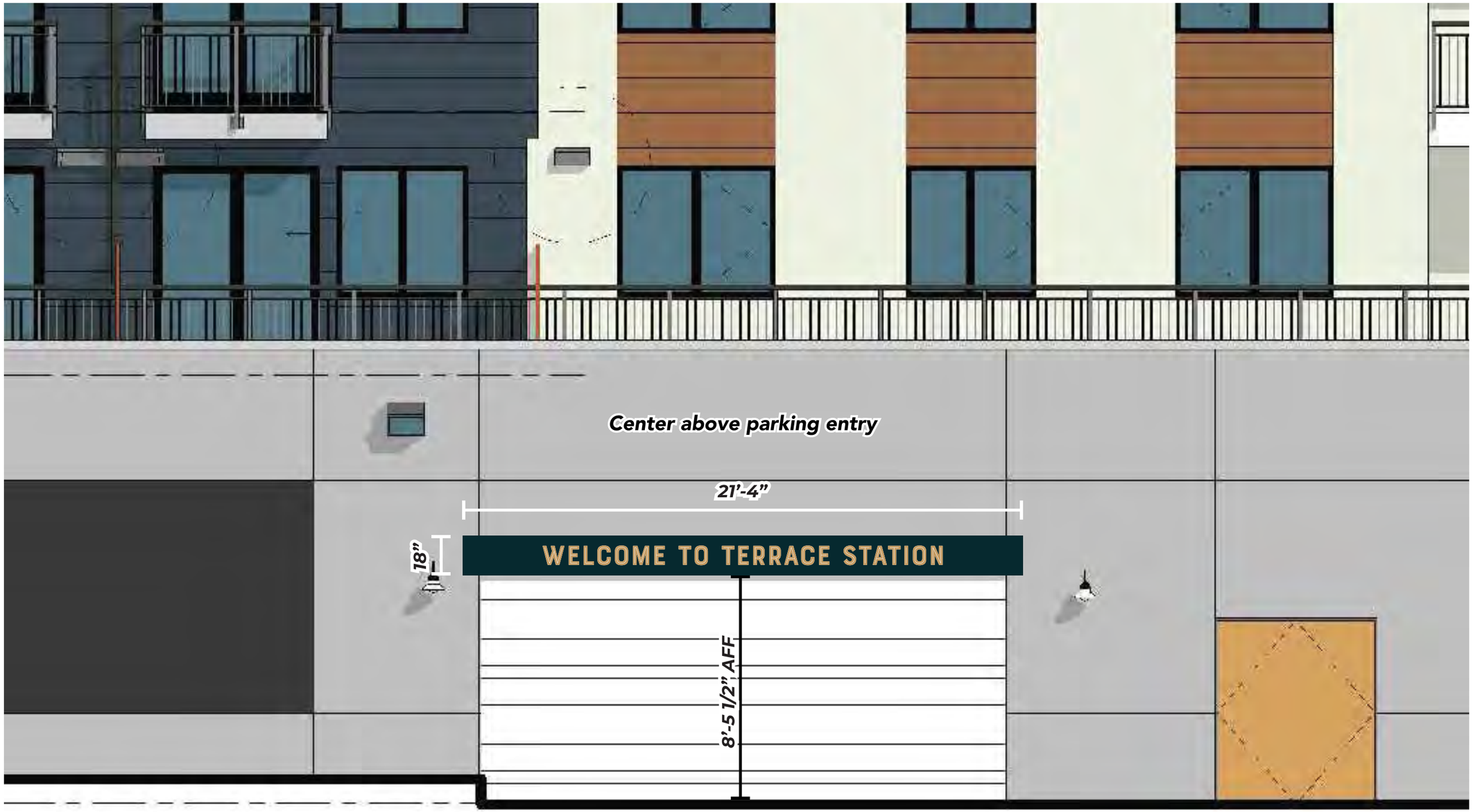

B2 East Elevation

A DESIGN STUDIO

MAIN CONTACT
Gracia Mueller
360.929.3077

CREATIVE
Brody Lund
425.359.7380

Additional information:
adesignstudioseattle.com

Follow us on social:
@adesignstudioseattle

COPYRIGHT
All artwork contained herein is the copyrighted property of A Design Studio Seattle. This includes, but is not limited to, logos, specifications, artwork and engineering. Any usage beyond internal reviews shall require our appoval and a separate design fee paid to A Design Studio Seattle. Usage rights can also be purchased (limited or complete) for an additional fee. Any unlawful distribution of said artwork is a violation of federal copyright laws.

PROJECT NAME
Terrace Station

PROJECT #
20-004

ADDRESS
24015 Van Ry Blvd
Mountlake Terrace, WA 98043

DATE
12/10/20

VERSION NOTES

V1
V2
V3
V4
V5
V6
V7
V8
V9
V10
V11
V12
V13
V14
V15

PAGE SCALE
1/4" = 1'-0"

PAGE #
108

B2-S29 - DETAILS

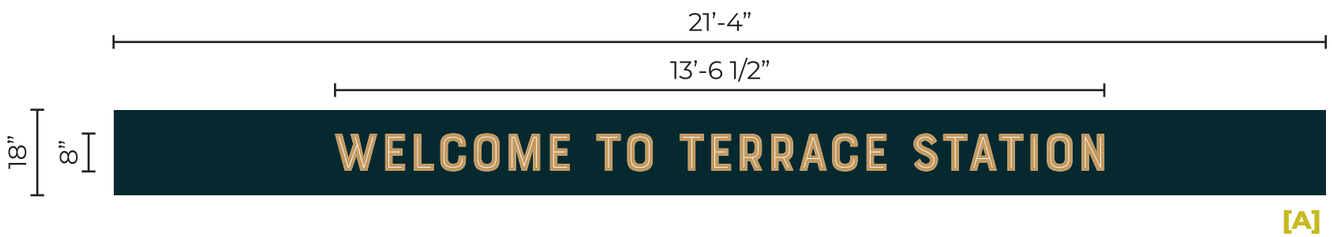

Face View

Sign B2-S29: *Manufacture & install (1) single face non-illuminated wall sign with FCO graphics.*

Sign Area: 32.0 Square Feet

[A] Digitally-printed first-surface vinyl graphics. Colors to match brand colors.

A DESIGN STUDIO

MAIN CONTACT
Gracia Mueller
360.929.3077

CREATIVE
Brody Lund
425.359.7380

Additional information:
adesignstudioseattle.com

Follow us on social:
@adesignstudioseattle

COPYRIGHT
All artwork contained herein is the copyrighted property of A Design Studio Seattle. This includes, but is not limited to, logos, specifications, artwork and engineering. Any usage beyond internal reviews shall require our appoval and a separate design fee paid to A Design Studio Seattle. Usage rights can also be purchased (limited or complete) for an additional fee. Any unlawful distribution of said artwork is a violation of federal copyright laws.

PROJECT NAME
Terrace Station

PROJECT #
20-004

ADDRESS
24015 Van Ry Blvd
Mountlake Terrace, WA 98043

DATE
12/10/20

VERSION NOTES

V1
V2
V3
V4
V5
V6
V7
V8
V9
V10
V11
V12
V13
V14
V15

PAGE SCALE
3/8" = 1'-0"

B2-S30 - ELEVATIONS

Sign Area: 32.0 Square Feet

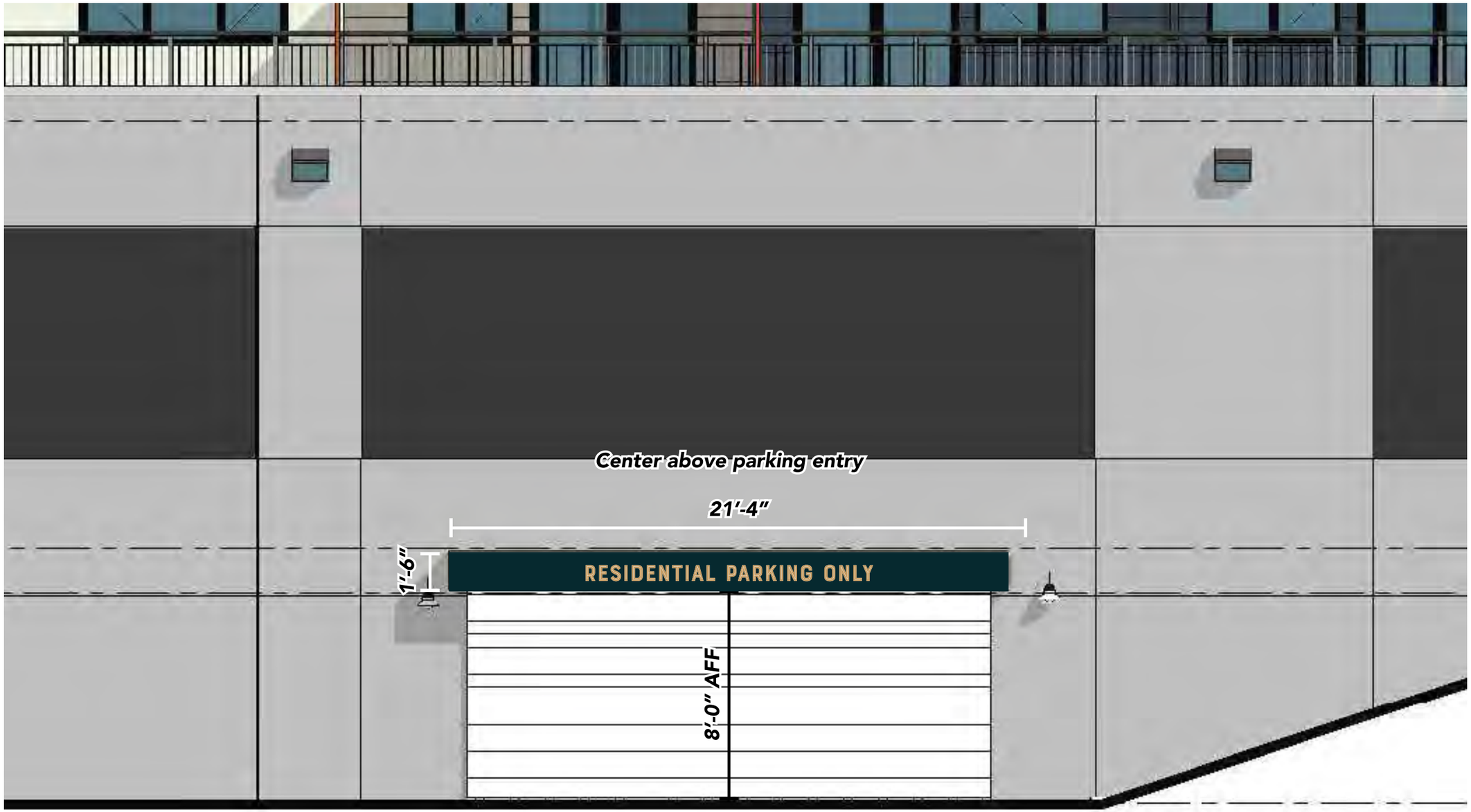

B2 East Elevation

A DESIGN STUDIO

MAIN CONTACT
Gracia Mueller
360.929.3077

CREATIVE
Brody Lund
425.359.7380

Additional information:
adesignstudioseattle.com

Follow us on social:
@adesignstudioseattle

COPYRIGHT
All artwork contained herein is the copyrighted property of A Design Studio Seattle. This includes, but is not limited to, logos, specifications, artwork and engineering. Any usage beyond internal reviews shall require our appoval and a separate design fee paid to A Design Studio Seattle. Usage rights can also be purchased (limited or complete) for an additional fee. Any unlawful distribution of said artwork is a violation of federal copyright laws.

PROJECT NAME
Terrace Station

PROJECT #
20-004

ADDRESS
24015 Van Ry Blvd
Mountlake Terrace, WA 98043

DATE
12/10/20

VERSION NOTES

V1
V2
V3
V4
V5
V6
V7
V8
V9
V10
V11
V12
V13
V14
V15

PAGE SCALE
1/4" = 1'-0"

PAGE #
110

B2-S30 - DETAILS

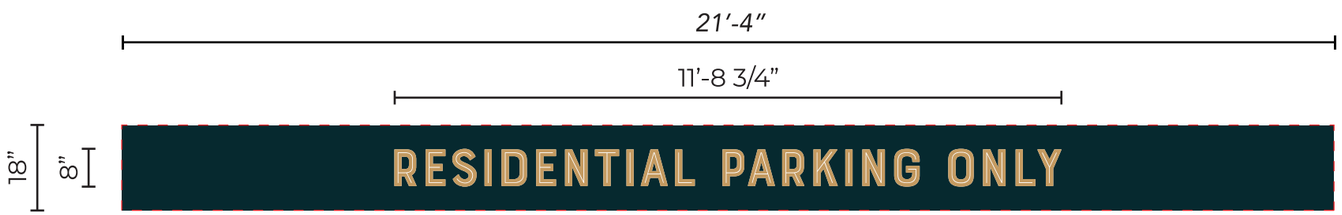

Face View

[A]

Sign B2-S30: *Manufacture & install (1) single face non-illuminated wall sign with FCO graphics.*

Sign Area: 32.0 Square Feet

[A] Digitally-printed first-surface vinyl graphics. Colors to match brand colors.

A DESIGN STUDIO

MAIN CONTACT
Gracia Mueller
360.929.3077

CREATIVE
Brody Lund
425.359.7380

Additional information:
adesignstudioseattle.com

Follow us on social:
@adesignstudioseattle

COPYRIGHT
All artwork contained herein is the copyrighted property of A Design Studio Seattle. This includes, but is not limited to, logos, specifications, artwork and engineering. Any usage beyond internal reviews shall require our appoval and a separate design fee paid to A Design Studio Seattle. Usage rights can also be purchased (limited or complete) for an additional fee. Any unlawful distribution of said artwork is a violation of federal copyright laws.

PROJECT NAME
Terrace Station

PROJECT #
20-004

ADDRESS
24015 Van Ry Blvd
Mountlake Terrace, WA 98043

DATE
12/10/20

VERSION NOTES

V1
V2
V3
V4
V5
V6
V7
V8
V9
V10
V11
V12
V13
V14
V15

PAGE SCALE
3/8" = 1'-0"

PAGE #
111

B2-S31 - ELEVATIONS

Sign Area: 37.5 Square Feet

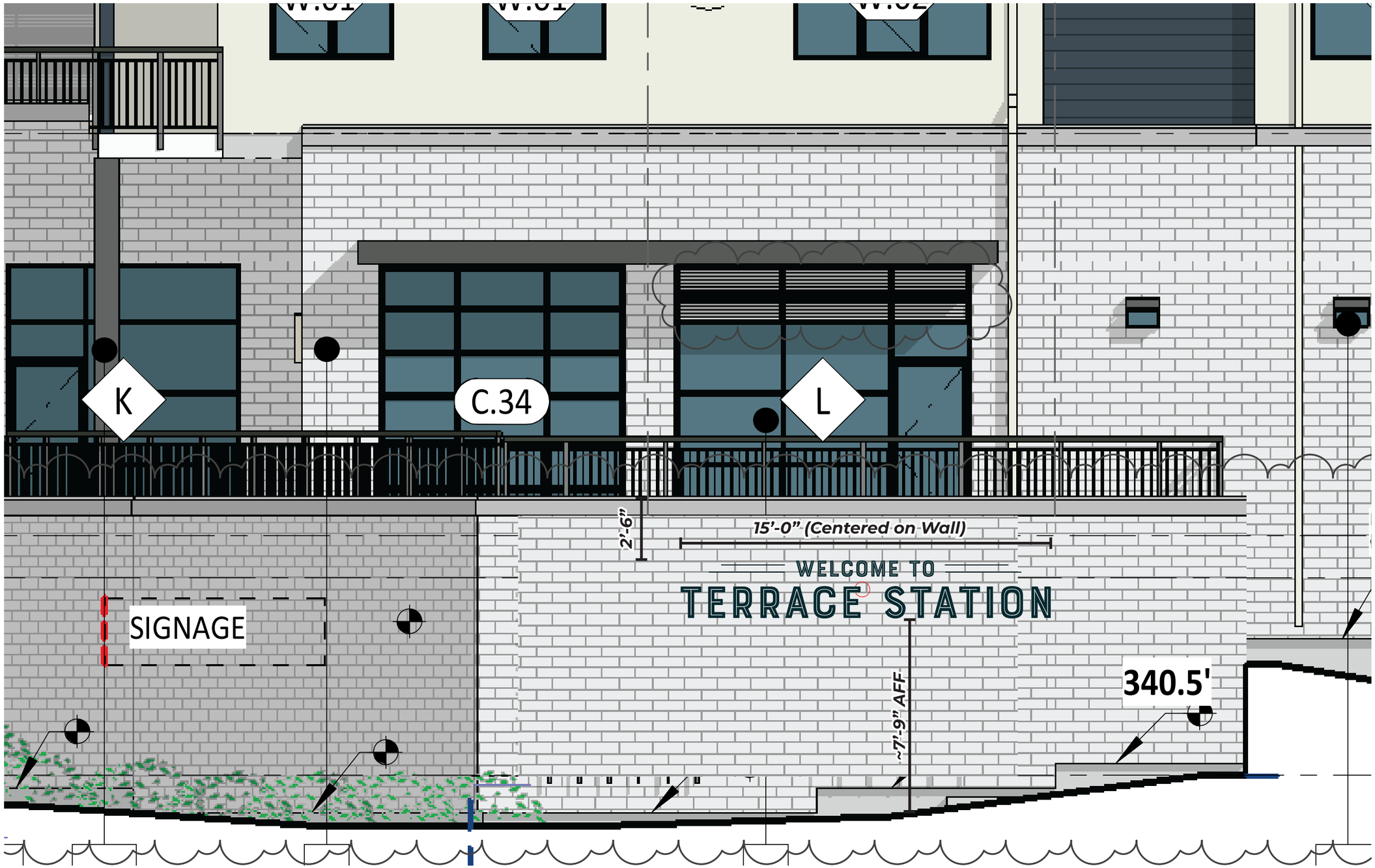

B2 South Elevation

A DESIGN STUDIO

MAIN CONTACT
Gracia Mueller
360.929.3077

CREATIVE
Brody Lund
425.359.7380

Additional information:
adesignstudioseattle.com

Follow us on social:
@adesignstudioseattle

COPYRIGHT
All artwork contained herein is the copyrighted property of A Design Studio Seattle. This includes, but is not limited to, logos, specifications, artwork and engineering. Any usage beyond internal reviews shall require our appoval and a separate design fee paid to A Design Studio Seattle. Usage rights can also be purchased (limited or complete) for an additional fee. Any unlawful distribution of said artwork is a violation of federal copyright laws.

PROJECT NAME
Terrace Station

PROJECT #
20-004

ADDRESS
24015 Van Ry Blvd
Mountlake Terrace, WA 98043

DATE
12/10/20

VERSION NOTES

V1
V2
V3
V4
V5
V6
V7
V8
V9
V10
V11
V12
V13
V14
V15

PAGE SCALE
1/4" = 1'-0"

PAGE #
112

B2-S31 - ATTACHMENT

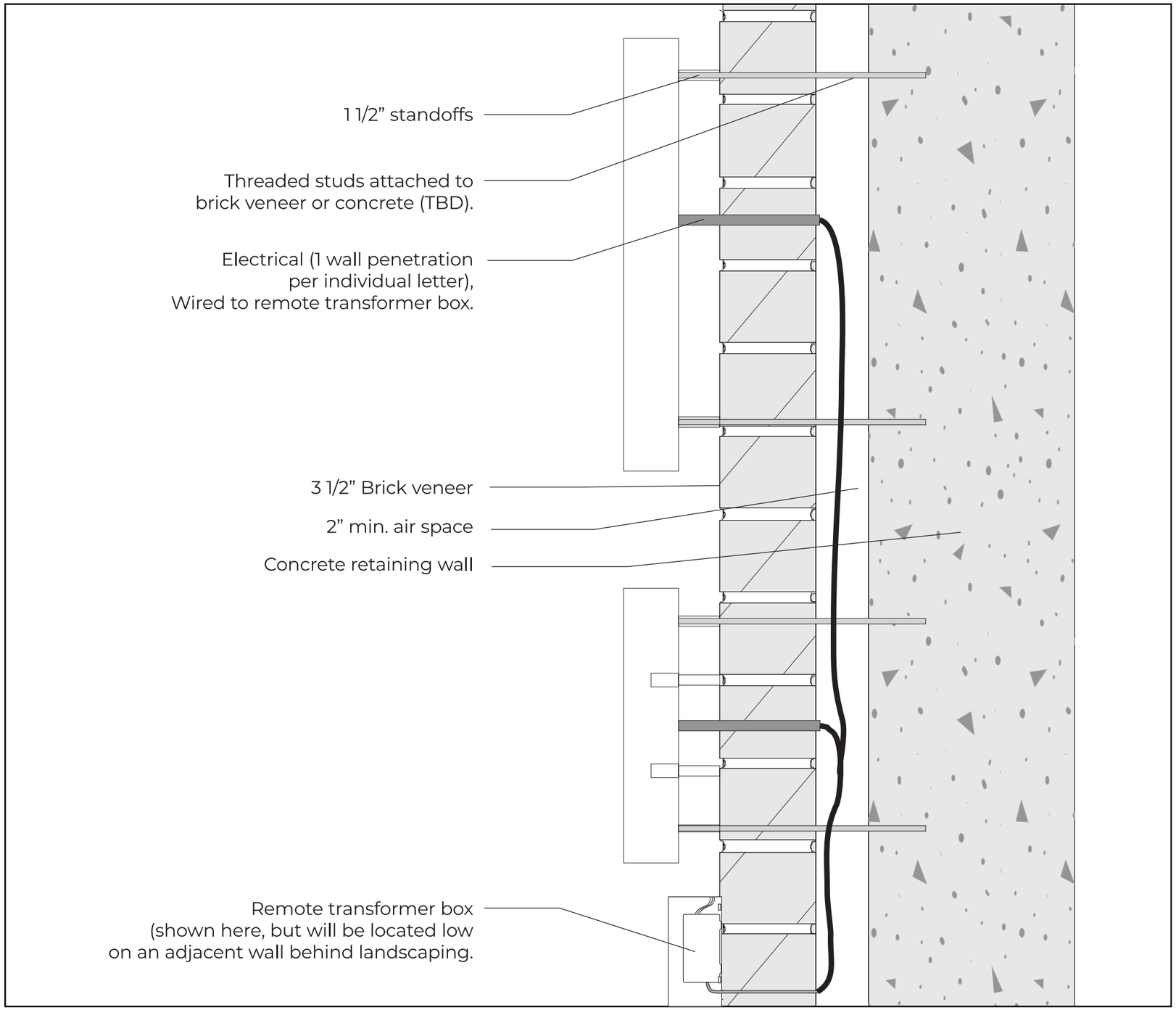

Attachment Detail

Scale: 3” = 1’-0”

A DESIGN STUDIO

MAIN CONTACT
Gracia Mueller
360.929.3077

CREATIVE
Brody Lund
425.359.7380

Additional information:
adesignstudioseattle.com

Follow us on social:
@adesignstudioseattle

COPYRIGHT
All artwork contained herein is the copyrighted property of A Design Studio Seattle. This includes, but is not limited to, logos, specifications, artwork and engineering. Any usage beyond internal reviews shall require our appoval and a separate design fee paid to A Design Studio Seattle. Usage rights can also be purchased (limited or complete) for an additional fee. Any unlawful distribution of said artwork is a violation of federal copyright laws.

PROJECT NAME
Terrace Station

PROJECT #
20-004

ADDRESS
24015 Van Ry Blvd
Mountlake Terrace, WA 98043

DATE
12/10/20

VERSION NOTES

V1
V2
V3
V4
V5
V6
V7
V8
V9
V10
V11
V12
V13
V14
V15

PAGE SCALE
As Noted

PAGE #

B2-S31 - DETAILS

FACE VIEW

[A] 2" deep aluminum halo-lit letters, paint to match PMS 546 C, satin finish, with white vinyl linework.
Halo-lit with white LEDs.

[B] 1" thick aluminum accent lines, painted to match PMS 546 C, satin finish. Non-illuminated.

[C] Mounted to brick wall with 1 1/2" standoffs.

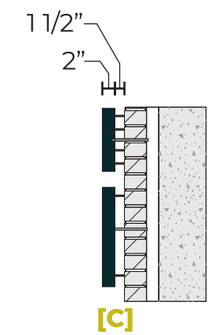

END VIEW

Sign B2-S31: *Manufacture & install (1) single-face halo-illuminated wall sign.*

Sign Area: 37.5 Square Feet

NIGHT VIEW

A DESIGN STUDIO

MAIN CONTACT
Gracia Mueller
360.929.3077

CREATIVE
Brody Lund
425.359.7380

Additional information:
adesignstudioseattle.com

Follow us on social:
@adesignstudioseattle

COPYRIGHT
All artwork contained herein is the copyrighted property of A Design Studio Seattle. This includes, but is not limited to, logos, specifications, artwork and engineering. Any usage beyond internal reviews shall require our appoval and a separate design fee paid to A Design Studio Seattle. Usage rights can also be purchased (limited or complete) for an additional fee. Any unlawful distribution of said artwork is a violation of federal copyright laws.

PROJECT NAME
Terrace Station

PROJECT #
20-004

ADDRESS
24015 Van Ry Blvd
Mountlake Terrace, WA 98043

DATE
12/10/20

VERSION NOTES

V1
V2
V3
V4
V5
V6
V7
V8
V9
V10
V11
V12
V13
V14
V15

PAGE SCALE
1/2" = 1'-0"

PAGE #
114

B2-S32 - ELEVATIONS

Sign Area: 40.0 Square Feet

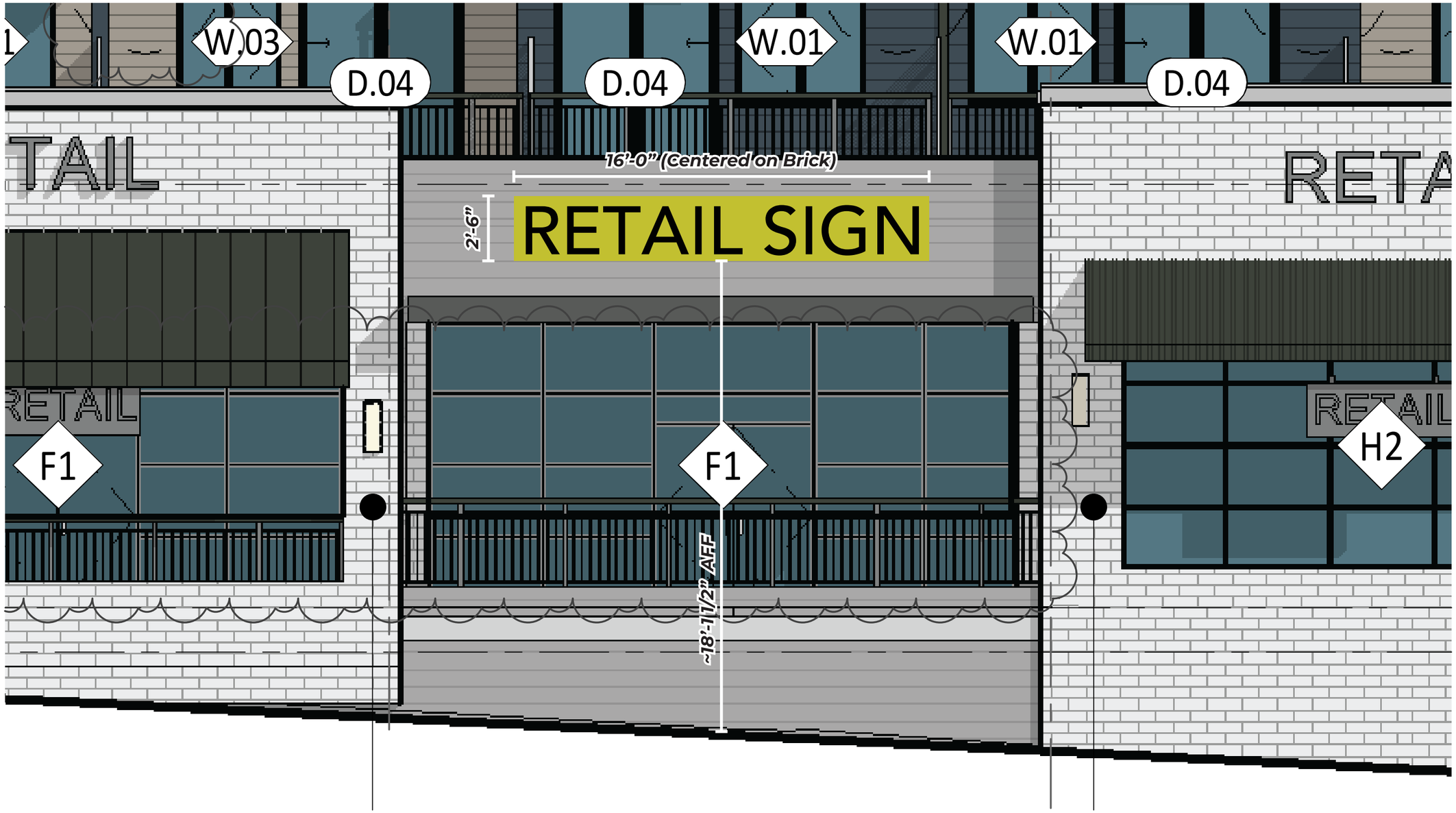

B2 West Elevation

A DESIGN STUDIO

MAIN CONTACT
Gracia Mueller
360.929.3077

CREATIVE
Brody Lund
425.359.7380

Additional information:
adesignstudioseattle.com

Follow us on social:
@adesignstudioseattle

COPYRIGHT
All artwork contained herein is the copyrighted property of A Design Studio Seattle. This includes, but is not limited to, logos, specifications, artwork and engineering. Any usage beyond internal reviews shall require our appoval and a separate design fee paid to A Design Studio Seattle. Usage rights can also be purchased (limited or complete) for an additional fee. Any unlawful distribution of said artwork is a violation of federal copyright laws.

PROJECT NAME
Terrace Station

PROJECT #
20-004

ADDRESS
24015 Van Ry Blvd
Mountlake Terrace, WA 98043

DATE
12/10/20

VERSION NOTES

V1
V2
V3
V4
V5
V6
V7
V8
V9
V10
V11
V12
V13
V14
V15

PAGE SCALE
1/4" = 1'-0"

PAGE #

B2-S32 - ATTACHMENT DETAILS

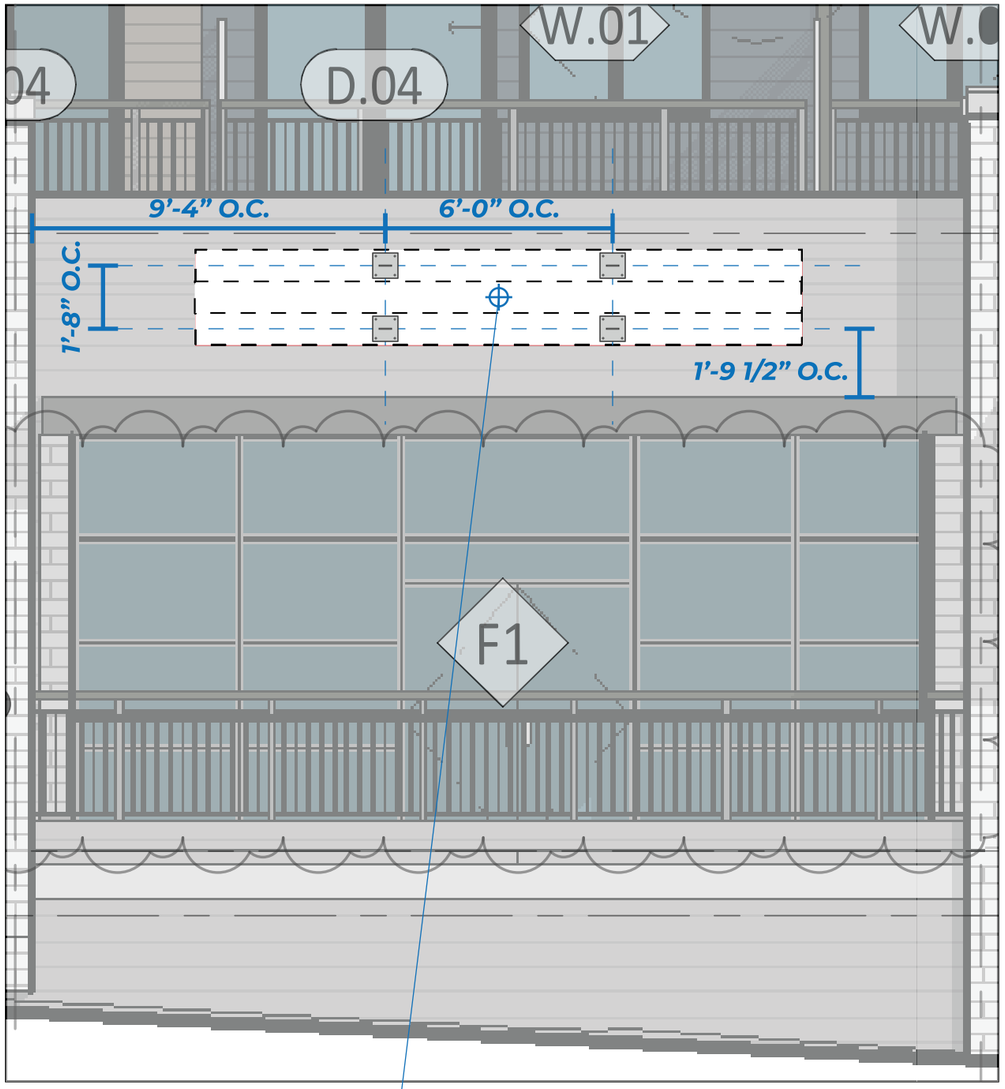

B2 West Elevation
Scale: 1/4"=1'-0"

Primary Electrical Location
Client to provide 20 Amp / 120 Volt dedicated circuit to sign location

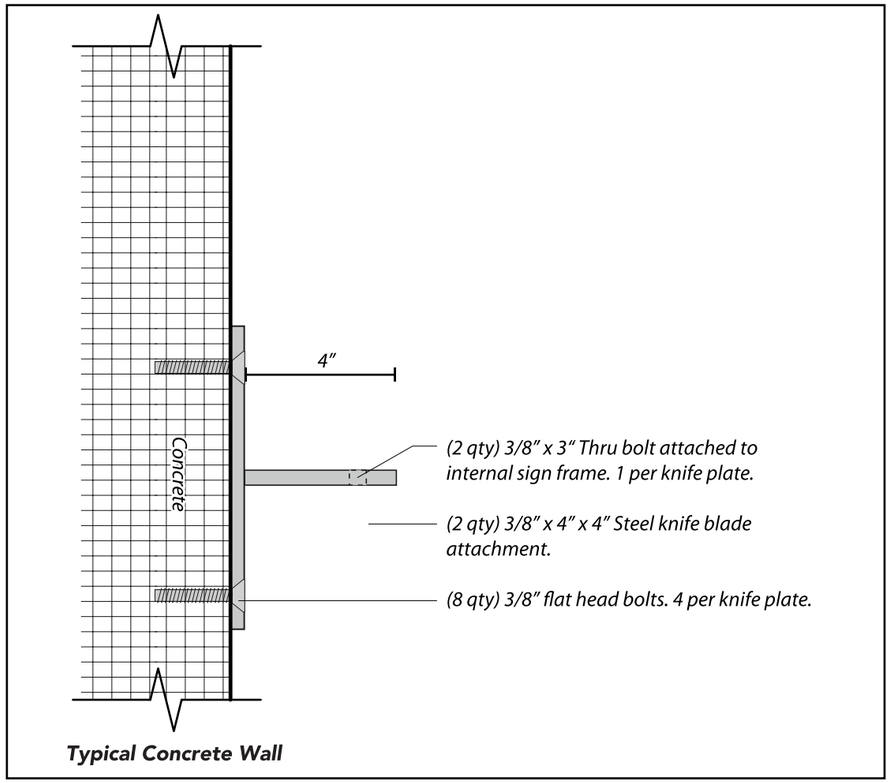

Knife Plate Install Detail
Scale: 3"=1'-0"

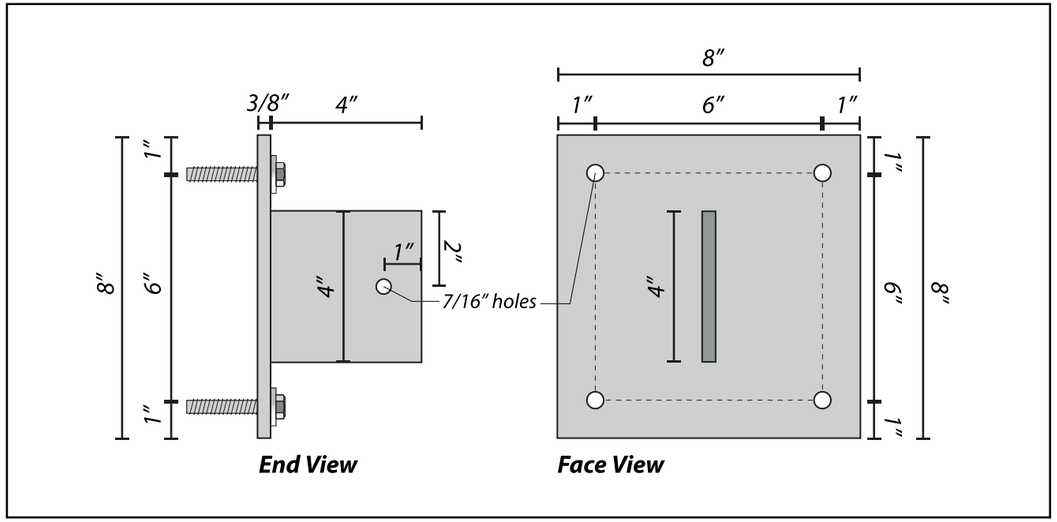

3/8" x 8" x 8" Steel Plate Detail
Scale: 3"=1'-0"

A DESIGN STUDIO

MAIN CONTACT
Gracia Mueller
360.929.3077

CREATIVE
Brody Lund
425.359.7380

Additional information:
adesignstudioseattle.com

Follow us on social:
@adesignstudioseattle

COPYRIGHT
All artwork contained herein is the copyrighted property of A Design Studio Seattle. This includes, but is not limited to, logos, specifications, artwork and engineering. Any usage beyond internal reviews shall require our appoval and a separate design fee paid to A Design Studio Seattle. Usage rights can also be purchased (limited or complete) for an additional fee. Any unlawful distribution of said artwork is a violation of federal copyright laws.

PROJECT NAME
Terrace Station

PROJECT #
20-004

ADDRESS
24015 Van Ry Blvd
Mountlake Terrace, WA 98043

DATE
12/10/20

VERSION NOTES

V1
V2
V3
V4
V5
V6
V7
V8
V9
V10
V11
V12
V13
V14
V15

PAGE SCALE
As Noted

PAGE #

B2-S32.1 - ELEVATIONS

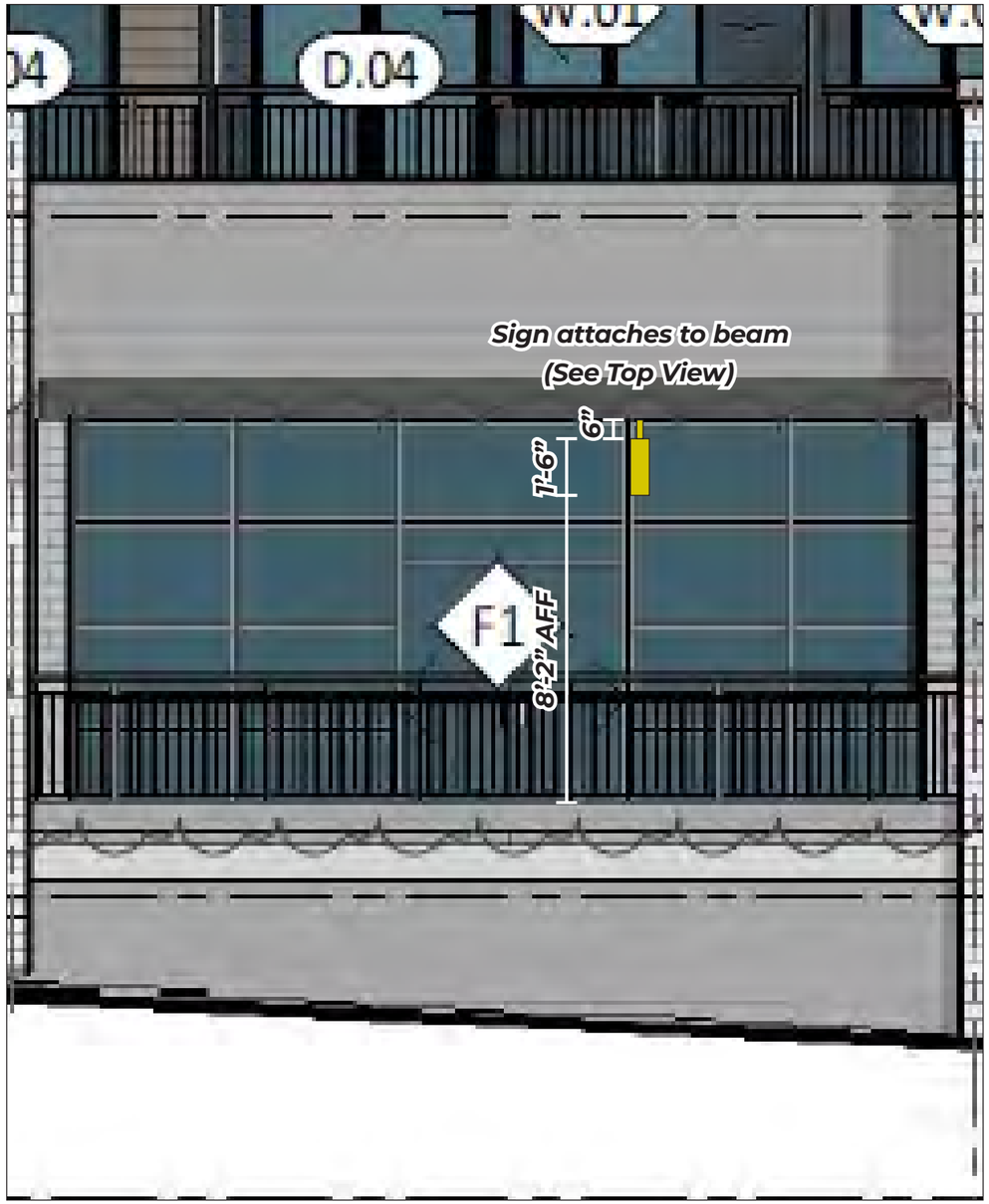

B2 West Elevation
Scale: 1/4"=1'-0"

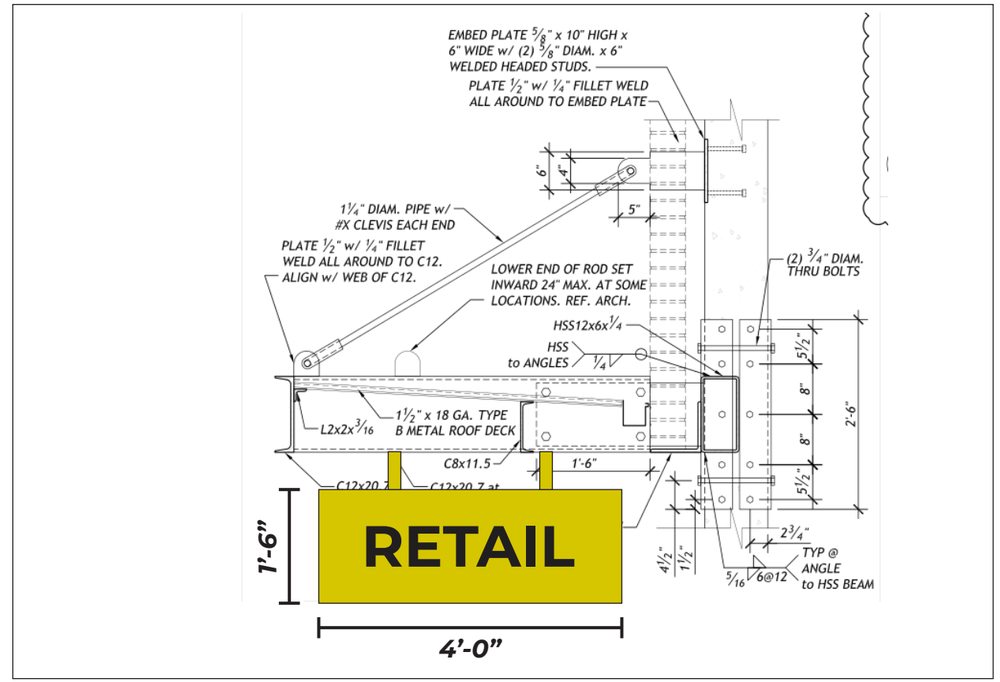

END VIEW
Scale: 1/2" = 1'-0"

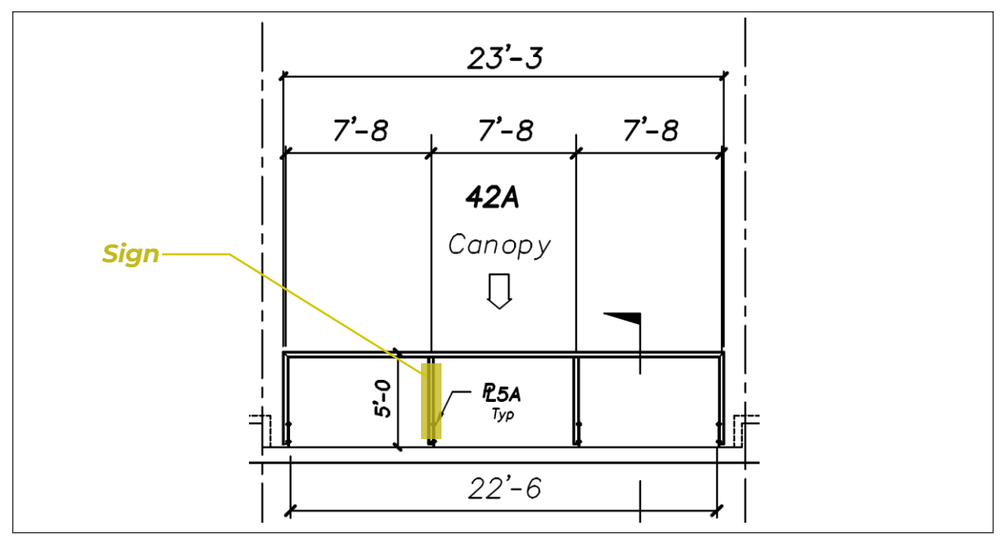

TOP VIEW
Scale: 1/8" = 1'-0"

A DESIGN STUDIO

MAIN CONTACT
Gracia Mueller
360.929.3077

CREATIVE
Brody Lund
425.359.7380

Additional information:
adesignstudioseattle.com

Follow us on social:
@adesignstudioseattle

COPYRIGHT
All artwork contained herein is the copyrighted property of A Design Studio Seattle. This includes, but is not limited to, logos, specifications, artwork and engineering. Any usage beyond internal reviews shall require our appoval and a separate design fee paid to A Design Studio Seattle. Usage rights can also be purchased (limited or complete) for an additional fee. Any unlawful distribution of said artwork is a violation of federal copyright laws.

PROJECT NAME
Terrace Station

PROJECT #
20-004

ADDRESS
24015 Van Ry Blvd
Mountlake Terrace, WA 98043

DATE
12/10/20

VERSION NOTES

V1
V2
V3
V4
V5
V6
V7
V8
V9
V10
V11
V12
V13
V14
V15

PAGE SCALE
1/4" = 1'-0"

PAGE #
116.1

B2-S33 - ELEVATIONS

Sign Area: 40.0 Square Feet

B2 West Elevation

A DESIGN STUDIO

MAIN CONTACT
Gracia Mueller
360.929.3077

CREATIVE
Brody Lund
425.359.7380

Additional information:
adesignstudioseattle.com

Follow us on social:
@adesignstudioseattle

COPYRIGHT
All artwork contained herein is the copyrighted property of A Design Studio Seattle. This includes, but is not limited to, logos, specifications, artwork and engineering. Any usage beyond internal reviews shall require our appoval and a separate design fee paid to A Design Studio Seattle. Usage rights can also be purchased (limited or complete) for an additional fee. Any unlawful distribution of said artwork is a violation of federal copyright laws.

PROJECT NAME
Terrace Station

PROJECT #
20-004

ADDRESS
24015 Van Ry Blvd
Mountlake Terrace, WA 98043

DATE
12/10/20

VERSION NOTES

V1
V2
V3
V4
V5
V6
V7
V8
V9
V10
V11
V12
V13
V14
V15

PAGE SCALE
1/4" = 1'-0"

PAGE #

B2-S33 - ATTACHMENT DETAILS

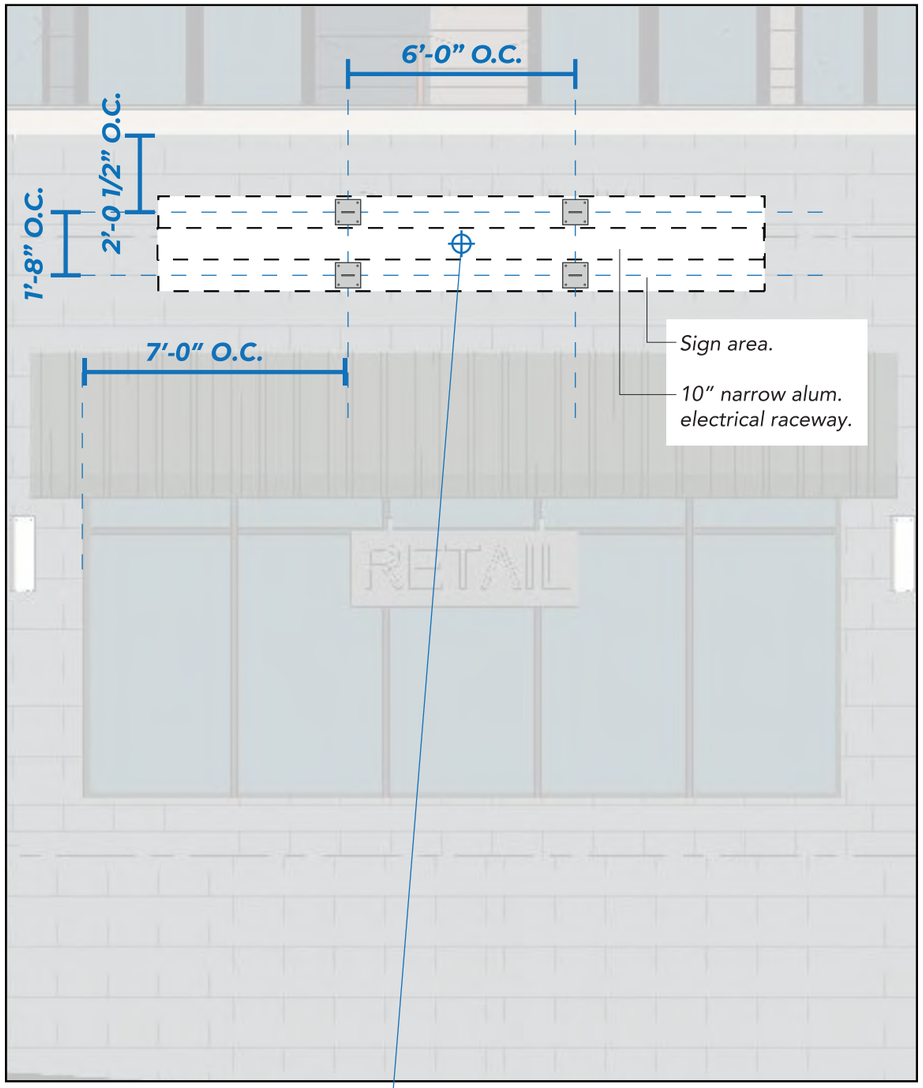

B2 West Elevation
Scale: 1/4"=1'-0"

Primary Electrical Location
Client to provide 20 Amp / 120 Volt dedicated circuit to sign location

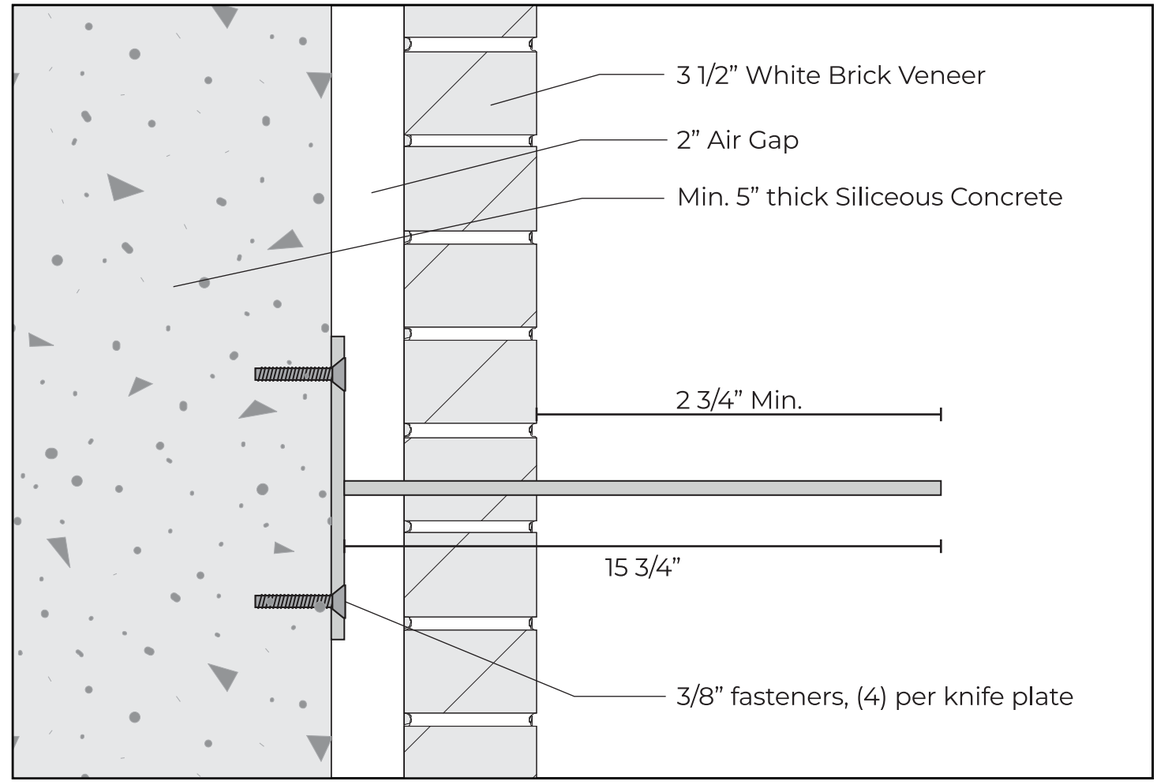

Knife Plate Install Detail
Scale: 3"=1'-0"

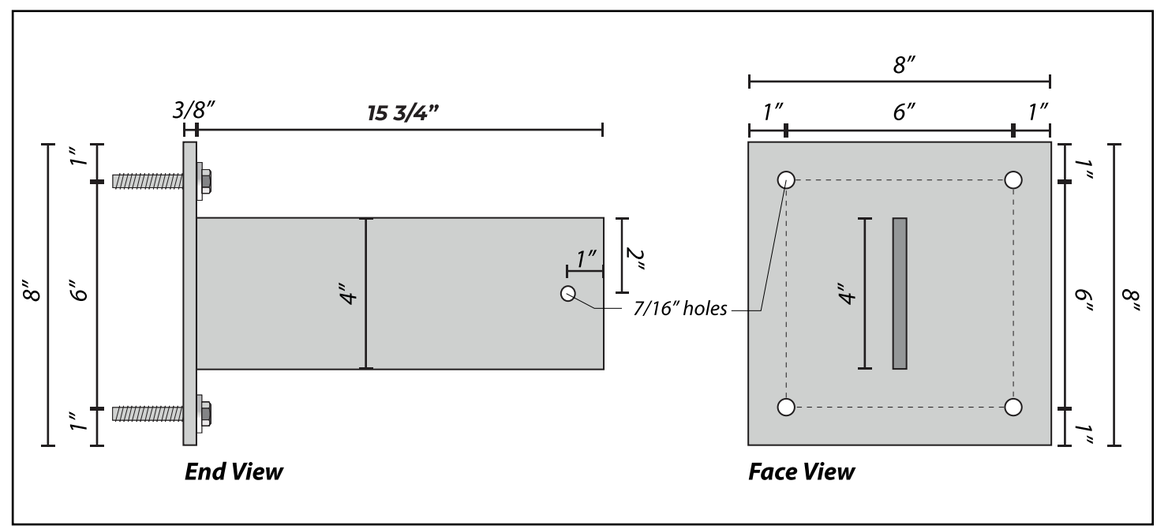

3/8" x 8" x 8" Steel Plate Detail
Scale: 3"=1'-0"

A DESIGN STUDIO

MAIN CONTACT
Gracia Mueller
360.929.3077

CREATIVE
Brody Lund
425.359.7380

Additional information:
adesignstudioseattle.com

Follow us on social:
@adesignstudioseattle

COPYRIGHT
All artwork contained herein is the copyrighted property of A Design Studio Seattle. This includes, but is not limited to, logos, specifications, artwork and engineering. Any usage beyond internal reviews shall require our appoval and a separate design fee paid to A Design Studio Seattle. Usage rights can also be purchased (limited or complete) for an additional fee. Any unlawful distribution of said artwork is a violation of federal copyright laws.

PROJECT NAME
Terrace Station

PROJECT #
20-004

ADDRESS
24015 Van Ry Blvd
Mountlake Terrace, WA 98043

DATE
12/10/20

VERSION NOTES

V1	
V2	Revised knife plate length
V3	
V4	
V5	
V6	
V7	
V8	
V9	
V10	
V11	
V12	
V13	
V14	
V15	

PAGE SCALE
As Noted

PAGE #

B2-S33.1 - ELEVATIONS

B2 West Elevation
Scale: 1/4"=1'-0"

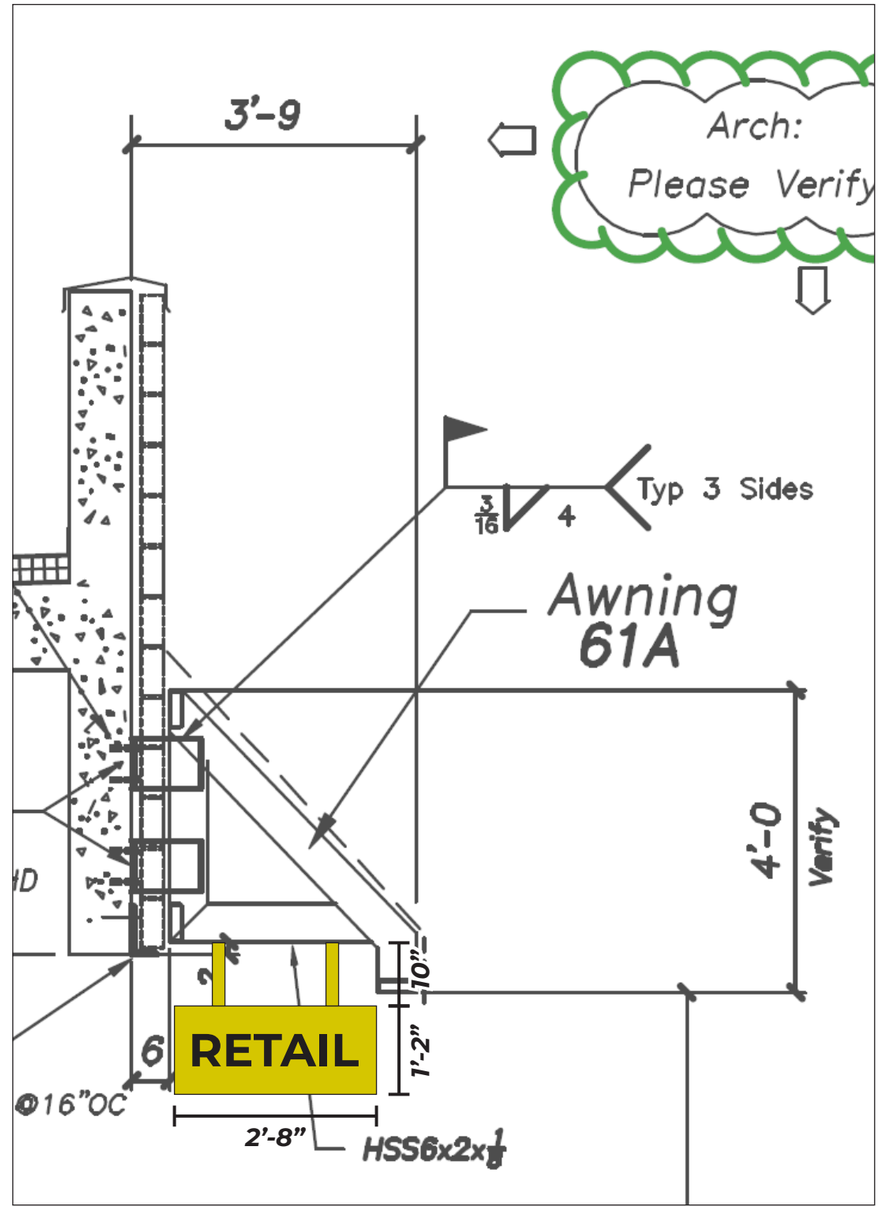

END VIEW
Scale: 1/2" = 1'-0"

A DESIGN STUDIO

MAIN CONTACT
Gracia Mueller
360.929.3077

CREATIVE
Brody Lund
425.359.7380

Additional information:
adesignstudioseattle.com

Follow us on social:
@adesignstudioseattle

COPYRIGHT
All artwork contained herein is the copyrighted property of A Design Studio Seattle. This includes, but is not limited to, logos, specifications, artwork and engineering. Any usage beyond internal reviews shall require our appoval and a separate design fee paid to A Design Studio Seattle. Usage rights can also be purchased (limited or complete) for an additional fee. Any unlawful distribution of said artwork is a violation of federal copyright laws.

PROJECT NAME
Terrace Station

PROJECT #
20-004

ADDRESS
24015 Van Ry Blvd
Mountlake Terrace, WA 98043

DATE
12/10/20

VERSION NOTES

V1	
V2	Revised knife plate length
V3	
V4	
V5	
V6	
V7	
V8	
V9	
V10	
V11	
V12	
V13	
V14	
V15	

PAGE SCALE
As Noted

PAGE #
118.1

B2-S33.1 - DETAILS

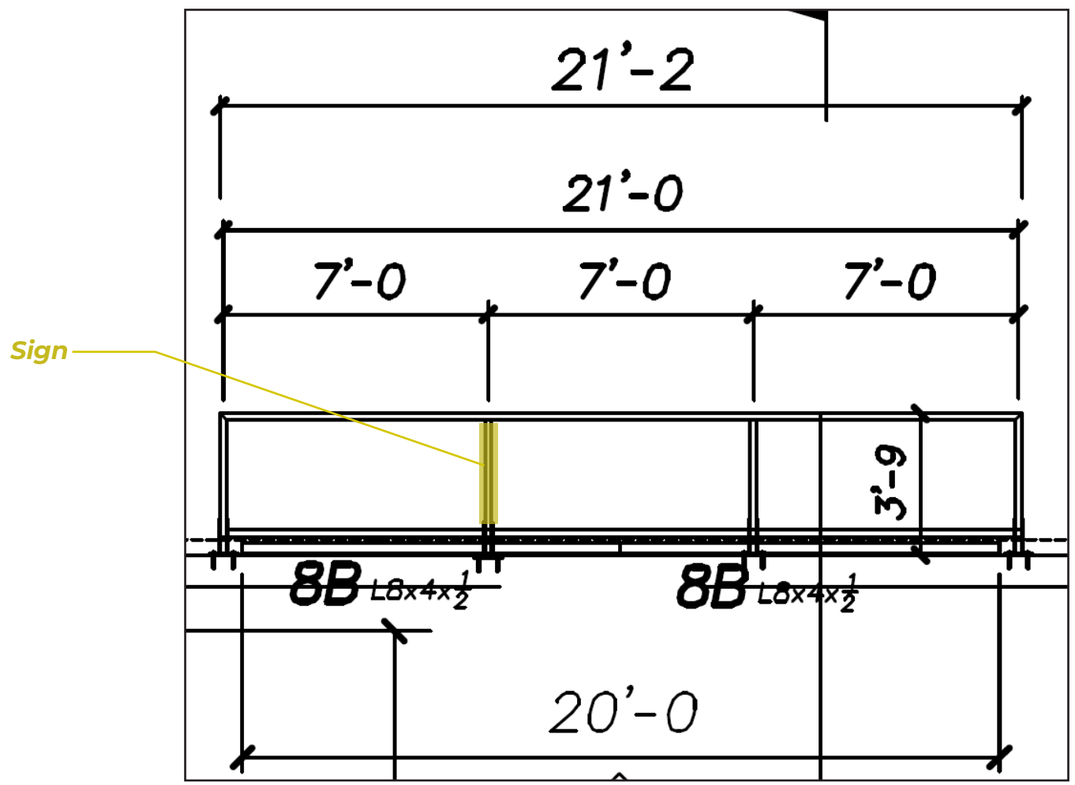

TOP VIEW
Scale: 1/4" = 1'-0"

A DESIGN STUDIO

MAIN CONTACT
Gracia Mueller
360.929.3077

CREATIVE
Brody Lund
425.359.7380

Additional information:
adesignstudioseattle.com

Follow us on social:
@adesignstudioseattle

COPYRIGHT
All artwork contained herein is the copyrighted property of A Design Studio Seattle. This includes, but is not limited to, logos, specifications, artwork and engineering. Any usage beyond internal reviews shall require our appoval and a separate design fee paid to A Design Studio Seattle. Usage rights can also be purchased (limited or complete) for an additional fee. Any unlawful distribution of said artwork is a violation of federal copyright laws.

PROJECT NAME
Terrace Station

PROJECT #
20-004

ADDRESS
24015 Van Ry Blvd
Mountlake Terrace, WA 98043

DATE
12/10/20

VERSION NOTES

V1	
V2	Revised knife plate length
V3	
V4	
V5	
V6	
V7	
V8	
V9	
V10	
V11	
V12	
V13	
V14	
V15	

PAGE SCALE
1/4" = 1'-0"

PAGE #
118.2

B2-S34 - ELEVATIONS

Sign Area: 40.0 Square Feet

B2 West Elevation

A DESIGN STUDIO

MAIN CONTACT
Gracia Mueller
360.929.3077

CREATIVE
Brody Lund
425.359.7380

Additional information:
adesignstudioseattle.com

Follow us on social:
@adesignstudioseattle

COPYRIGHT
All artwork contained herein is the copyrighted property of A Design Studio Seattle. This includes, but is not limited to, logos, specifications, artwork and engineering. Any usage beyond internal reviews shall require our appoval and a separate design fee paid to A Design Studio Seattle. Usage rights can also be purchased (limited or complete) for an additional fee. Any unlawful distribution of said artwork is a violation of federal copyright laws.

PROJECT NAME
Terrace Station

PROJECT #
20-004

ADDRESS
24015 Van Ry Blvd
Mountlake Terrace, WA 98043

DATE
12/10/20

VERSION NOTES

V1
V2
V3
V4
V5
V6
V7
V8
V9
V10
V11
V12
V13
V14
V15

PAGE SCALE
1/4" = 1'-0"

PAGE #

B2-S34 - ATTACHMENT DETAILS

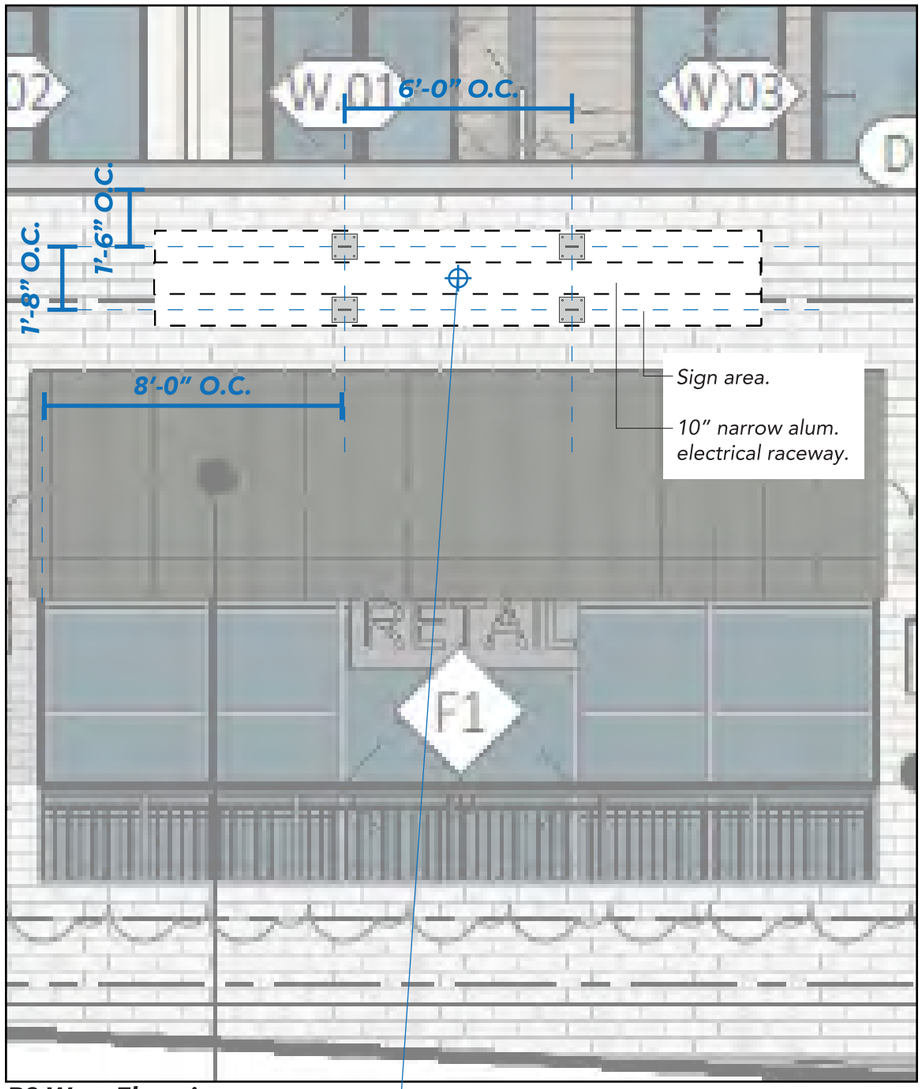

B2 West Elevation
Scale: 1/4"=1'-0"

Primary Electrical Location
Client to provide 20 Amp / 120 Volt dedicated circuit to sign location

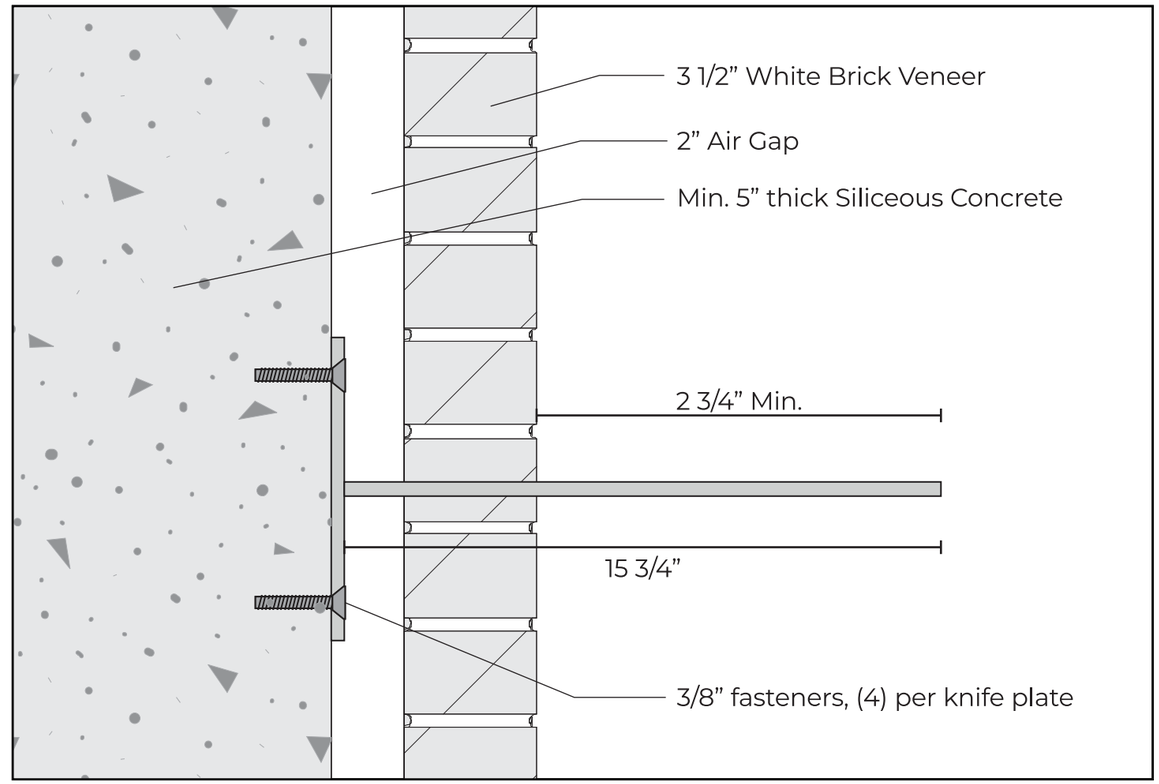

Knife Plate Install Detail
Scale: 3"=1'-0"

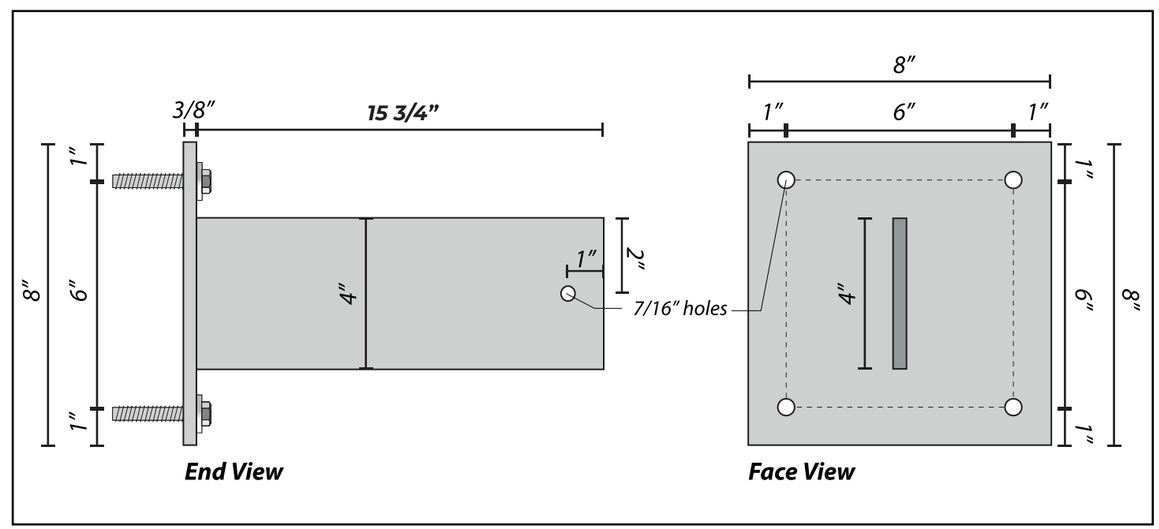

3/8" x 8" x 8" Steel Plate Detail
Scale: 3"=1'-0"

A DESIGN STUDIO

MAIN CONTACT
Gracia Mueller
360.929.3077

CREATIVE
Brody Lund
425.359.7380

Additional information:
adesignstudioseattle.com

Follow us on social:
@adesignstudioseattle

COPYRIGHT
All artwork contained herein is the copyrighted property of A Design Studio Seattle. This includes, but is not limited to, logos, specifications, artwork and engineering. Any usage beyond internal reviews shall require our appoval and a separate design fee paid to A Design Studio Seattle. Usage rights can also be purchased (limited or complete) for an additional fee. Any unlawful distribution of said artwork is a violation of federal copyright laws.

PROJECT NAME
Terrace Station

PROJECT #
20-004

ADDRESS
24015 Van Ry Blvd
Mountlake Terrace, WA 98043

DATE
12/10/20

VERSION NOTES
V1
V2
V3
V4
V5
V6
V7
V8
V9
V10
V11
V12
V13
V14
V15

PAGE SCALE
As Noted

PAGE #
120

B2-S34.1 - ELEVATIONS

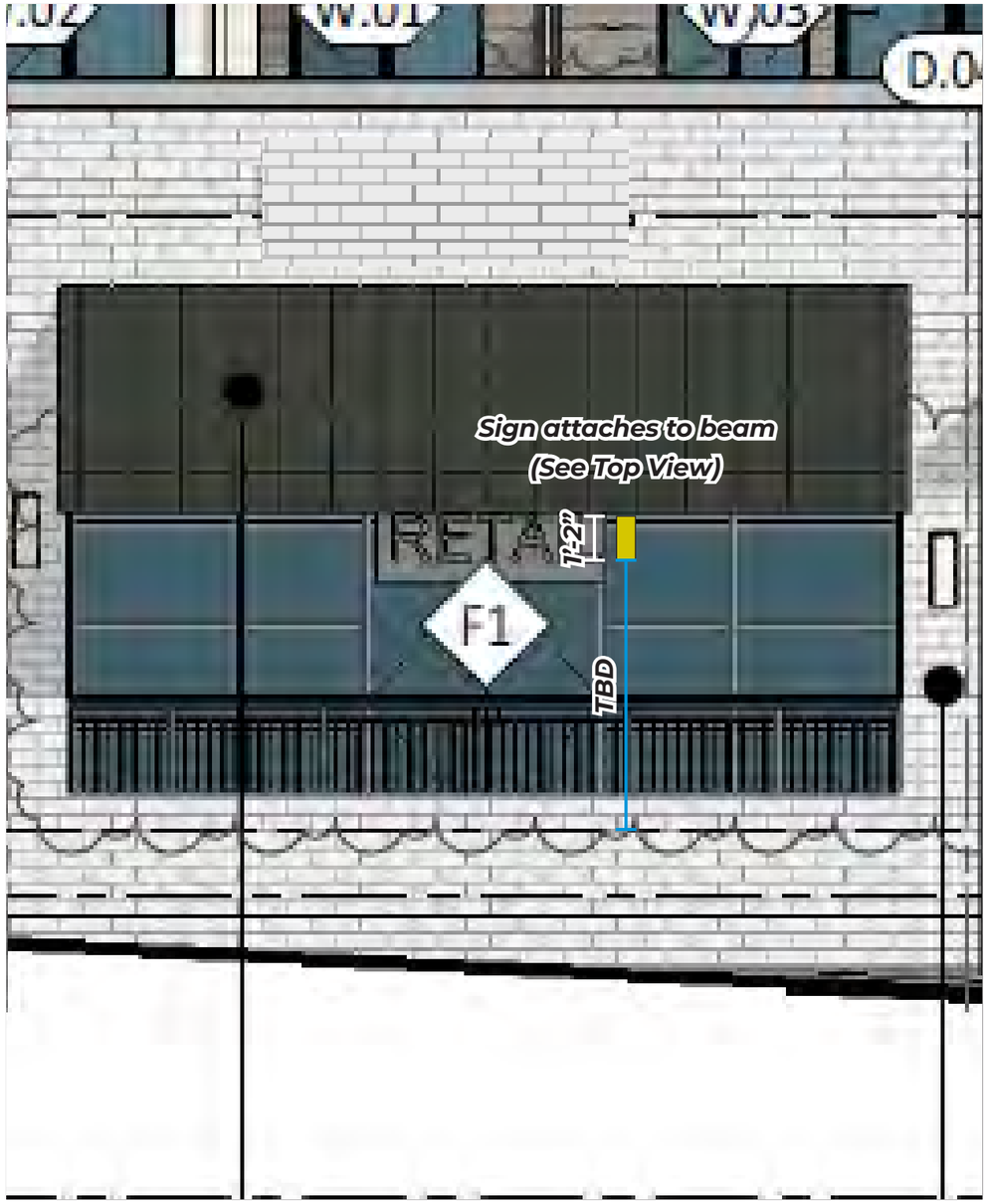

B2 West Elevation
Scale: 1/4"=1'-0"

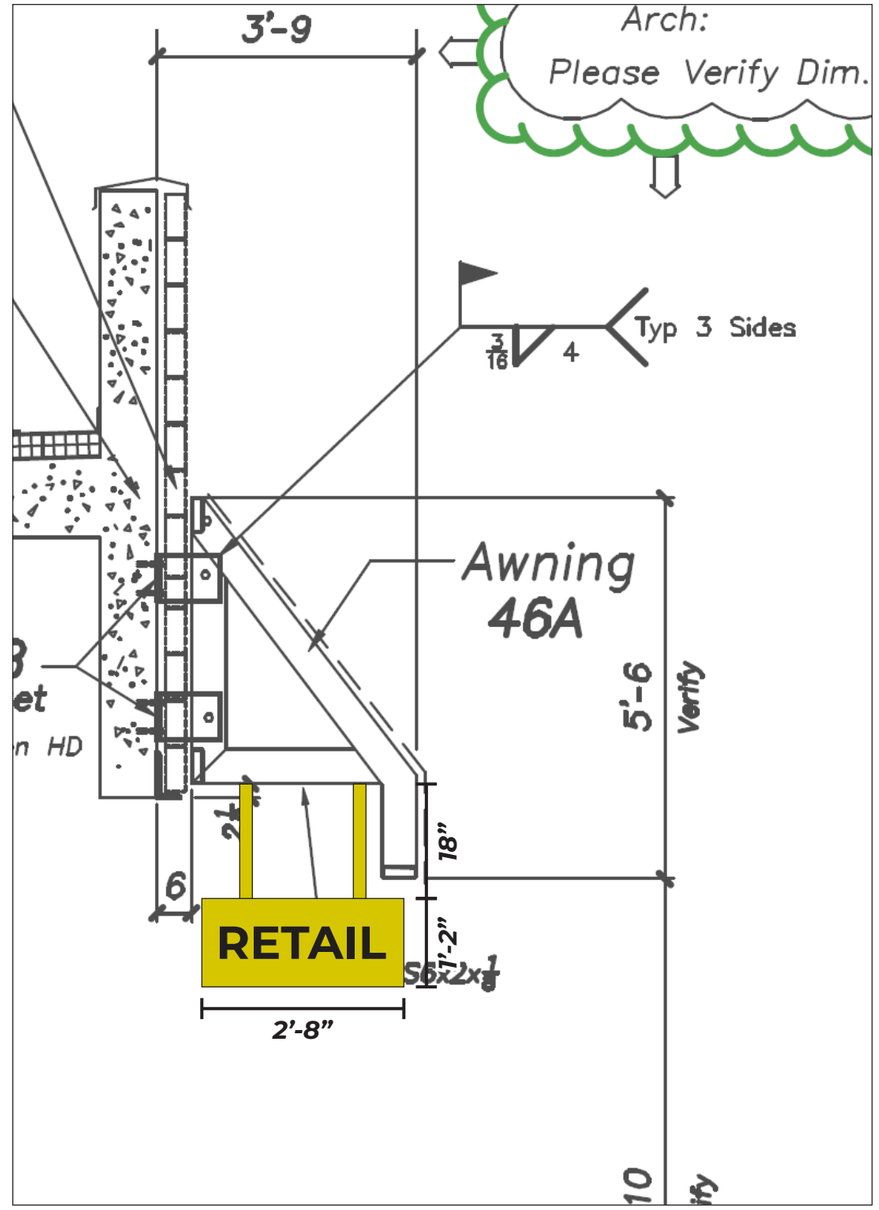

END VIEW
Scale: 1/2" = 1'-0"

A DESIGN STUDIO

MAIN CONTACT
Gracia Mueller
360.929.3077

CREATIVE
Brody Lund
425.359.7380

Additional information:
adesignstudioseattle.com

Follow us on social:
@adesignstudioseattle

COPYRIGHT
All artwork contained herein is the copyrighted property of A Design Studio Seattle. This includes, but is not limited to, logos, specifications, artwork and engineering. Any usage beyond internal reviews shall require our appoval and a separate design fee paid to A Design Studio Seattle. Usage rights can also be purchased (limited or complete) for an additional fee. Any unlawful distribution of said artwork is a violation of federal copyright laws.

PROJECT NAME
Terrace Station

PROJECT #
20-004

ADDRESS
24015 Van Ry Blvd
Mountlake Terrace, WA 98043

DATE
12/10/20

VERSION NOTES

V1
V2
V3
V4
V5
V6
V7
V8
V9
V10
V11
V12
V13
V14
V15

PAGE SCALE
As Noted

PAGE #
120.1

B2-S34.1 - DETAILS

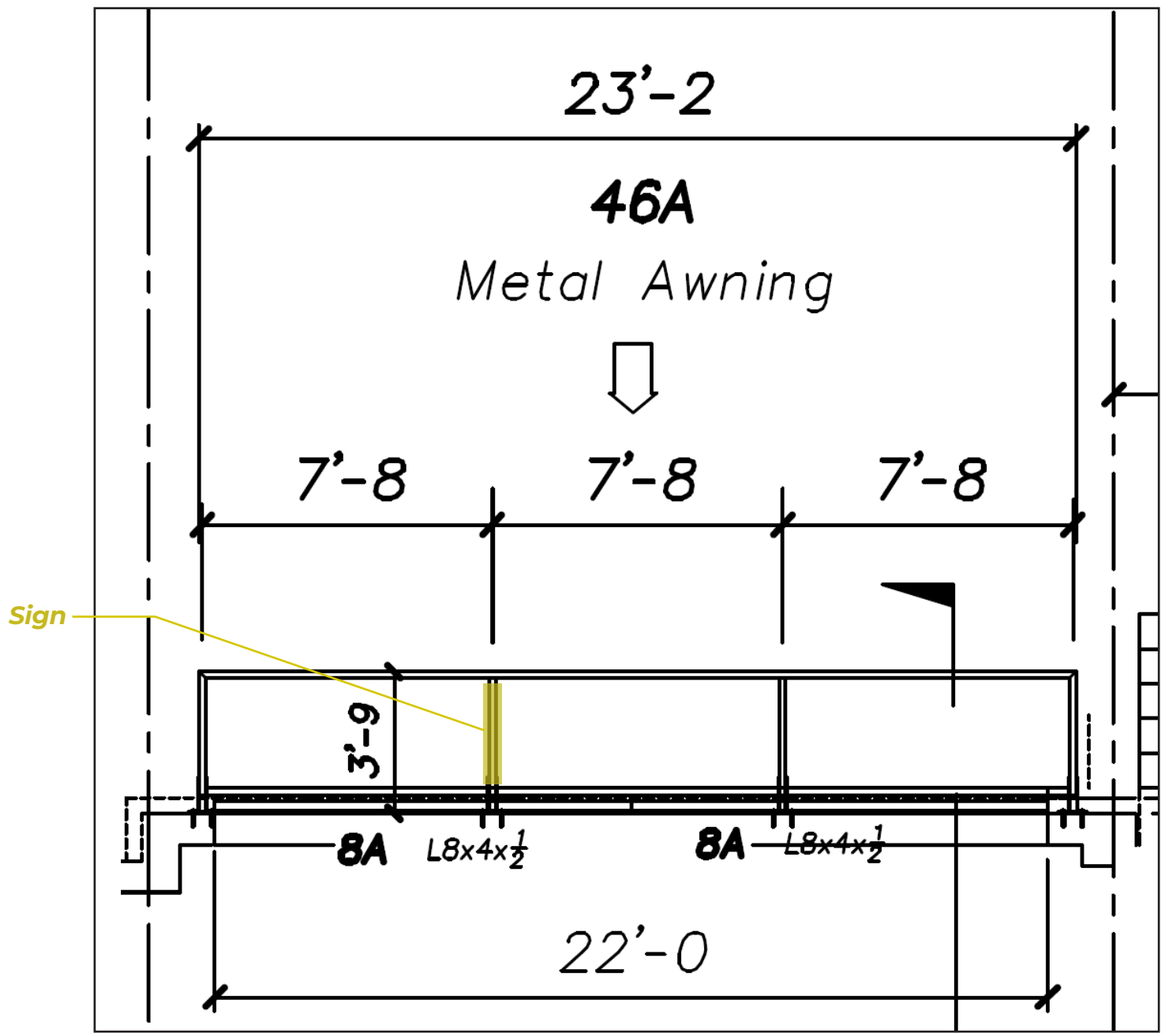

TOP VIEW
Scale: 1/4" = 1'-0"

A DESIGN STUDIO

MAIN CONTACT
Gracia Mueller
360.929.3077

CREATIVE
Brody Lund
425.359.7380

Additional information:
adesignstudioseattle.com

Follow us on social:
@adesignstudioseattle

COPYRIGHT
All artwork contained herein is the copyrighted property of A Design Studio Seattle. This includes, but is not limited to, logos, specifications, artwork and engineering. Any usage beyond internal reviews shall require our appoval and a separate design fee paid to A Design Studio Seattle. Usage rights can also be purchased (limited or complete) for an additional fee. Any unlawful distribution of said artwork is a violation of federal copyright laws.

PROJECT NAME
Terrace Station

PROJECT #
20-004

ADDRESS
24015 Van Ry Blvd
Mountlake Terrace, WA 98043

DATE
12/10/20

VERSION NOTES

V1
V2
V3
V4
V5
V6
V7
V8
V9
V10
V11
V12
V13
V14
V15

PAGE SCALE
As Noted

PAGE #
120.2

B2-S35 - ELEVATIONS

Sign Area: 40.0 Square Feet

B2 West Elevation

A DESIGN STUDIO

MAIN CONTACT
Gracia Mueller
360.929.3077

CREATIVE
Brody Lund
425.359.7380

Additional information:
adesignstudioseattle.com

Follow us on social:
@adesignstudioseattle

COPYRIGHT
All artwork contained herein is the copyrighted property of A Design Studio Seattle. This includes, but is not limited to, logos, specifications, artwork and engineering. Any usage beyond internal reviews shall require our appoval and a separate design fee paid to A Design Studio Seattle. Usage rights can also be purchased (limited or complete) for an additional fee. Any unlawful distribution of said artwork is a violation of federal copyright laws.

PROJECT NAME
Terrace Station

PROJECT #
20-004

ADDRESS
24015 Van Ry Blvd
Mountlake Terrace, WA 98043

DATE
12/10/20

VERSION NOTES

V1
V2
V3
V4
V5
V6
V7
V8
V9
V10
V11
V12
V13
V14
V15

PAGE SCALE
1/4" = 1'-0"

PAGE #
121

B2-S35 - ATTACHMENT DETAILS

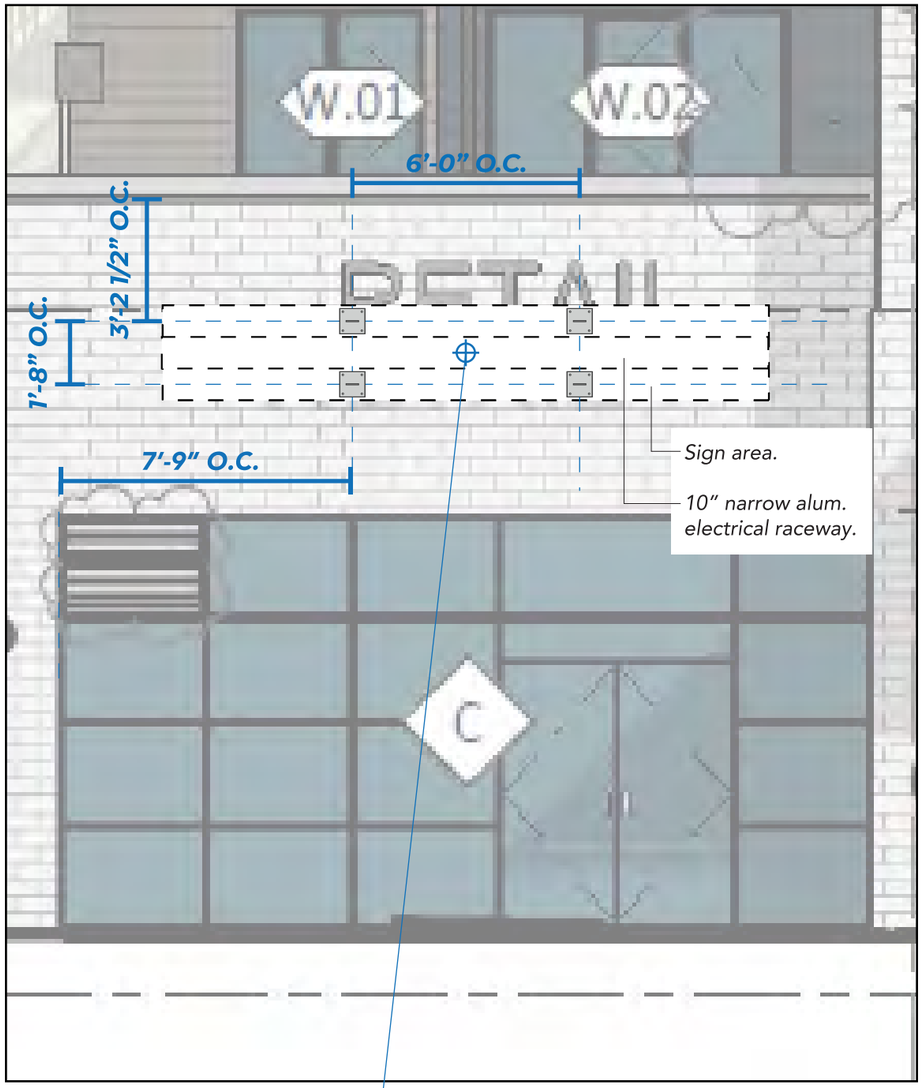

B2 West Elevation
Scale: 1/4"=1'-0"

Primary Electrical Location
Client to provide 20 Amp / 120 Volt dedicated circuit to sign location

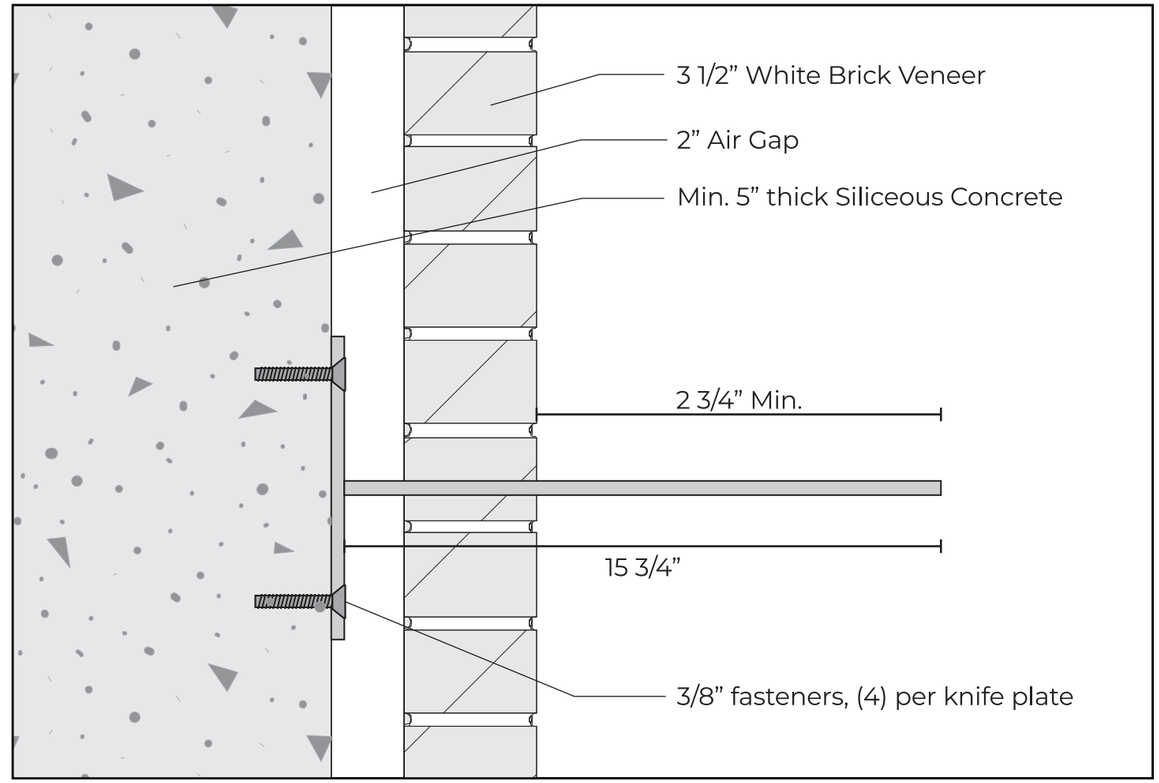

Knife Plate Install Detail
Scale: 3"=1'-0"

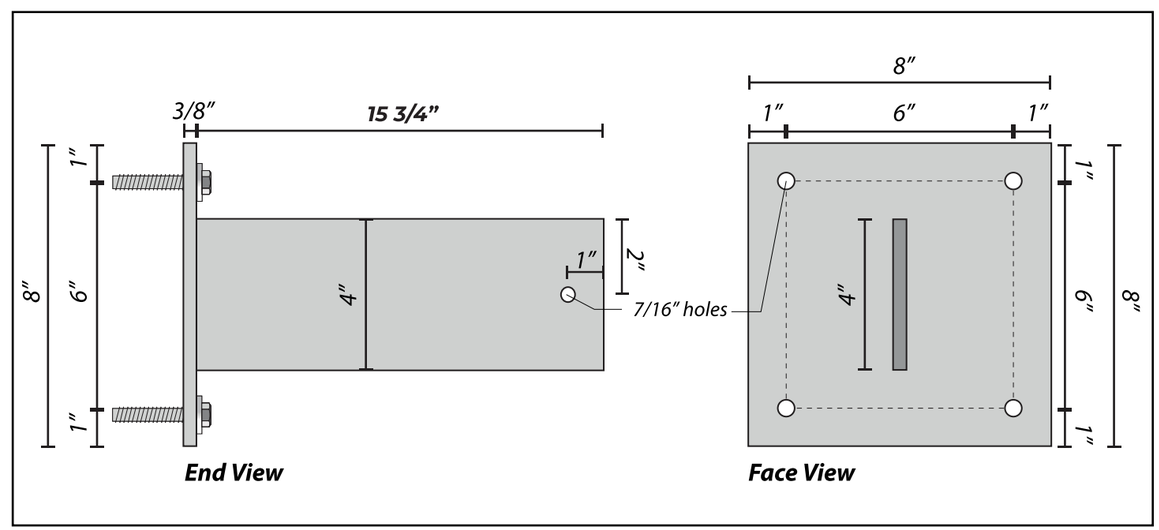

3/8" x 8" x 8" Steel Plate Detail
Scale: 3"=1'-0"

A DESIGN STUDIO

MAIN CONTACT
Gracia Mueller
360.929.3077

CREATIVE
Brody Lund
425.359.7380

Additional information:
adesignstudioseattle.com

Follow us on social:
@adesignstudioseattle

COPYRIGHT
All artwork contained herein is the copyrighted property of A Design Studio Seattle. This includes, but is not limited to, logos, specifications, artwork and engineering. Any usage beyond internal reviews shall require our appoval and a separate design fee paid to A Design Studio Seattle. Usage rights can also be purchased (limited or complete) for an additional fee. Any unlawful distribution of said artwork is a violation of federal copyright laws.

PROJECT NAME
Terrace Station

PROJECT #
20-004

ADDRESS
24015 Van Ry Blvd
Mountlake Terrace, WA 98043

DATE
12/10/20

VERSION NOTES

V1
V2
V3
V4
V5
V6
V7
V8
V9
V10
V11
V12
V13
V14
V15

PAGE SCALE
As Noted

PAGE #

B2-S35.1 - ELEVATIONS

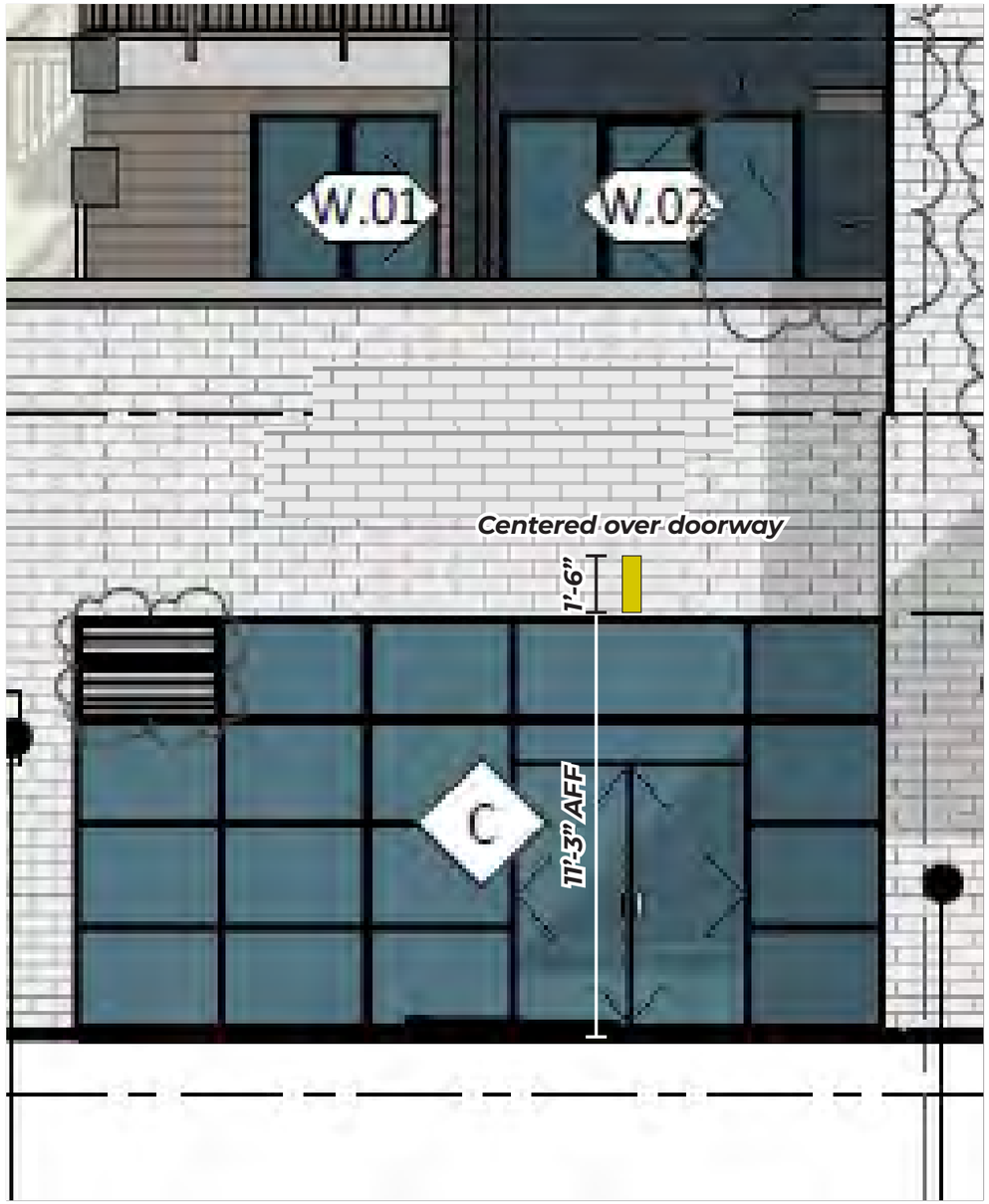

B2 West Elevation
Scale: 1/4"=1'-0"

FINAL LOCATION, ATTACHMENT METHOD PENDING SURVEY

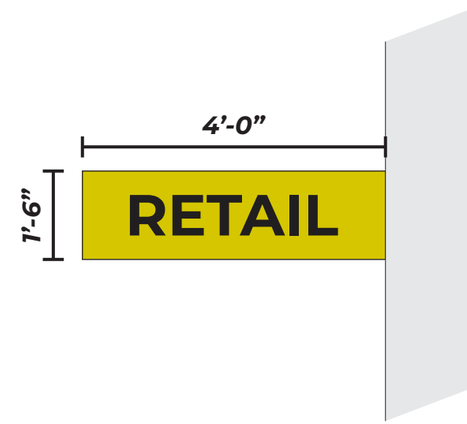

END VIEW
Scale: 1/2" = 1'-0"

A DESIGN STUDIO

MAIN CONTACT
Gracia Mueller
360.929.3077

CREATIVE
Brody Lund
425.359.7380

Additional information:
adesignstudioseattle.com

Follow us on social:
@adesignstudioseattle

COPYRIGHT
All artwork contained herein is the copyrighted property of A Design Studio Seattle. This includes, but is not limited to, logos, specifications, artwork and engineering. Any usage beyond internal reviews shall require our appoval and a separate design fee paid to A Design Studio Seattle. Usage rights can also be purchased (limited or complete) for an additional fee. Any unlawful distribution of said artwork is a violation of federal copyright laws.

PROJECT NAME
Terrace Station

PROJECT #
20-004

ADDRESS
24015 Van Ry Blvd
Mountlake Terrace, WA 98043

DATE
12/10/20

VERSION NOTES

V1
V2
V3
V4
V5
V6
V7
V8
V9
V10
V11
V12
V13
V14
V15

PAGE SCALE
As Noted

PAGE #
122.1

B2-S36 - ELEVATIONS

Sign Area: 33.0 Square Feet

B2 West Elevation

A DESIGN STUDIO

MAIN CONTACT
Gracia Mueller
360.929.3077

CREATIVE
Brody Lund
425.359.7380

Additional information:
adesignstudioseattle.com

Follow us on social:
@adesignstudioseattle

COPYRIGHT
All artwork contained herein is the copyrighted property of A Design Studio Seattle. This includes, but is not limited to, logos, specifications, artwork and engineering. Any usage beyond internal reviews shall require our appoval and a separate design fee paid to A Design Studio Seattle. Usage rights can also be purchased (limited or complete) for an additional fee. Any unlawful distribution of said artwork is a violation of federal copyright laws.

PROJECT NAME
Terrace Station

PROJECT #
20-004

ADDRESS
24015 Van Ry Blvd
Mountlake Terrace, WA 98043

DATE
12/10/20

VERSION NOTES

V1
V2
V3
V4
V5
V6
V7
V8
V9
V10
V11
V12
V13
V14
V15

PAGE SCALE
1/4" = 1'-0"

PAGE #

B2-S36 - ATTACHMENT DETAILS

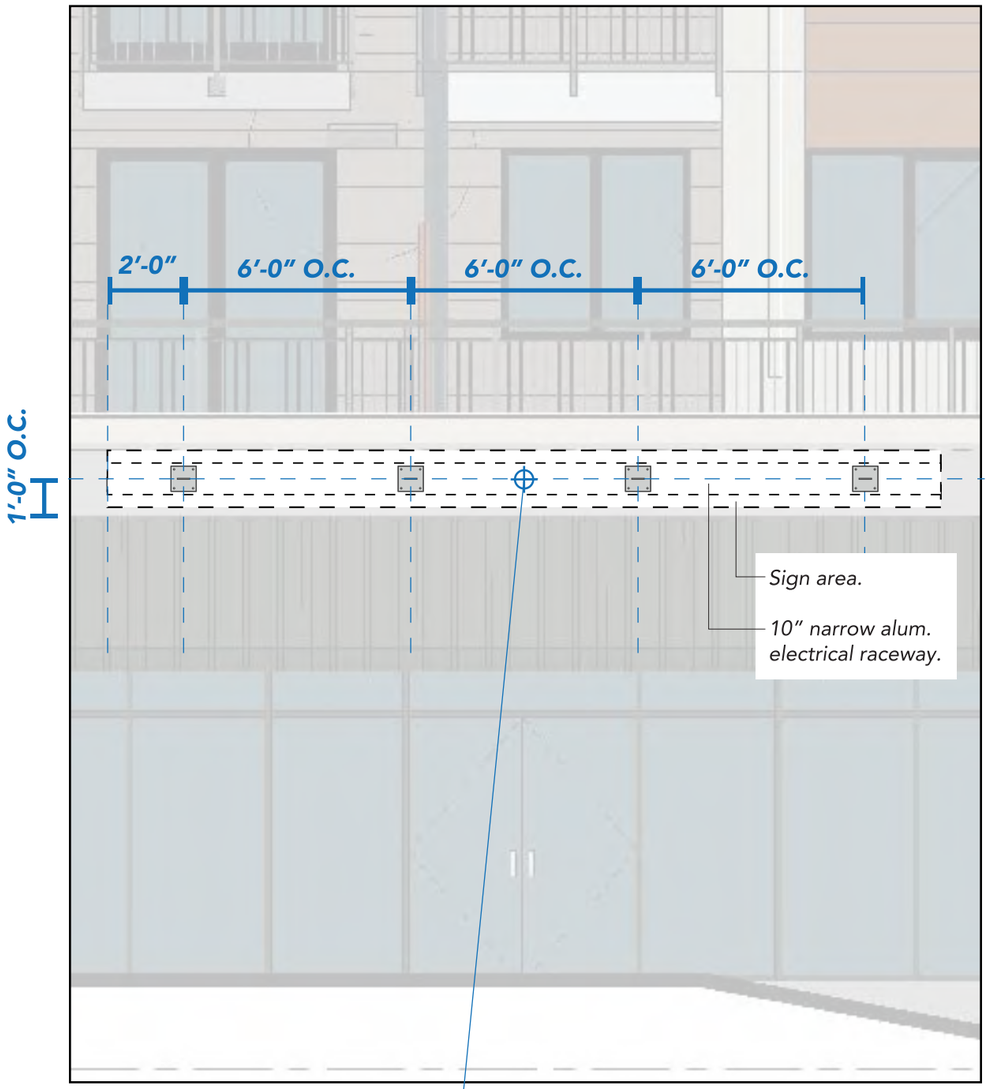

B2 West Elevation
Scale: 1/4"=1'-0"

Primary Electrical Location
Client to provide 20 Amp / 120 Volt dedicated circuit to sign location

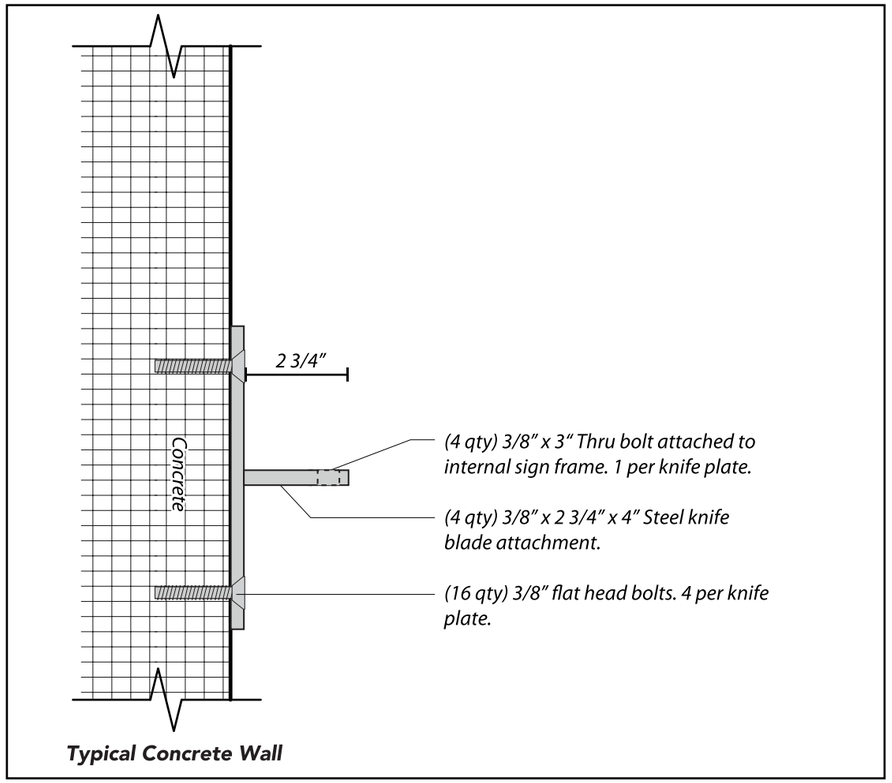

Knife Plate Install Detail
Scale: 3"=1'-0"

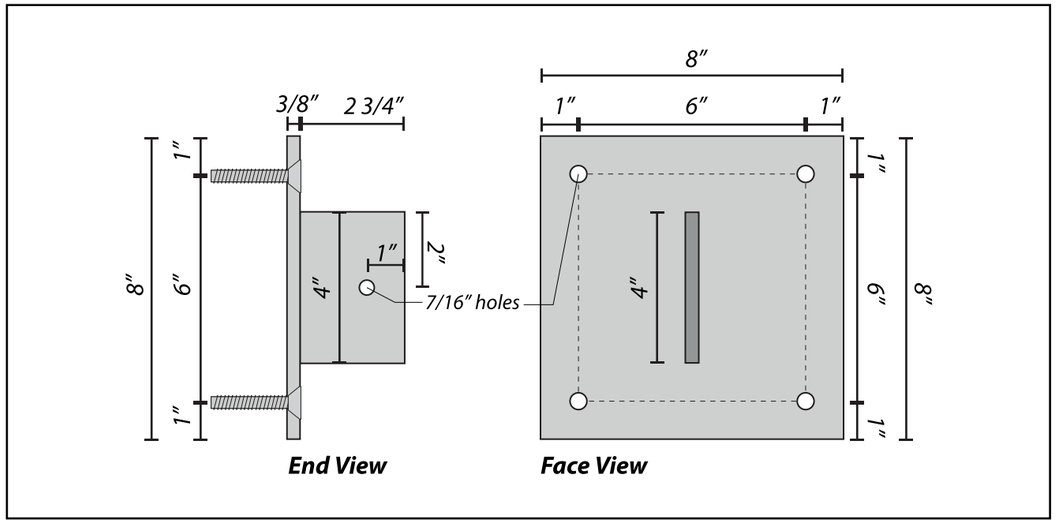

3/8" x 8" x 8" Steel Plate Detail
Scale: 3"=1'-0"

A DESIGN STUDIO

MAIN CONTACT
Gracia Mueller
360.929.3077

CREATIVE
Brody Lund
425.359.7380

Additional information:
adesignstudioseattle.com

Follow us on social:
@adesignstudioseattle

COPYRIGHT
All artwork contained herein is the copyrighted property of A Design Studio Seattle. This includes, but is not limited to, logos, specifications, artwork and engineering. Any usage beyond internal reviews shall require our appoval and a separate design fee paid to A Design Studio Seattle. Usage rights can also be purchased (limited or complete) for an additional fee. Any unlawful distribution of said artwork is a violation of federal copyright laws.

PROJECT NAME
Terrace Station

PROJECT #
20-004

ADDRESS
24015 Van Ry Blvd
Mountlake Terrace, WA 98043

DATE
12/10/20

VERSION NOTES

V1
V2
V3
V4
V5
V6
V7
V8
V9
V10
V11
V12
V13
V14
V15

PAGE SCALE
As Noted

PAGE #
124

B2-S36.1 - ELEVATIONS

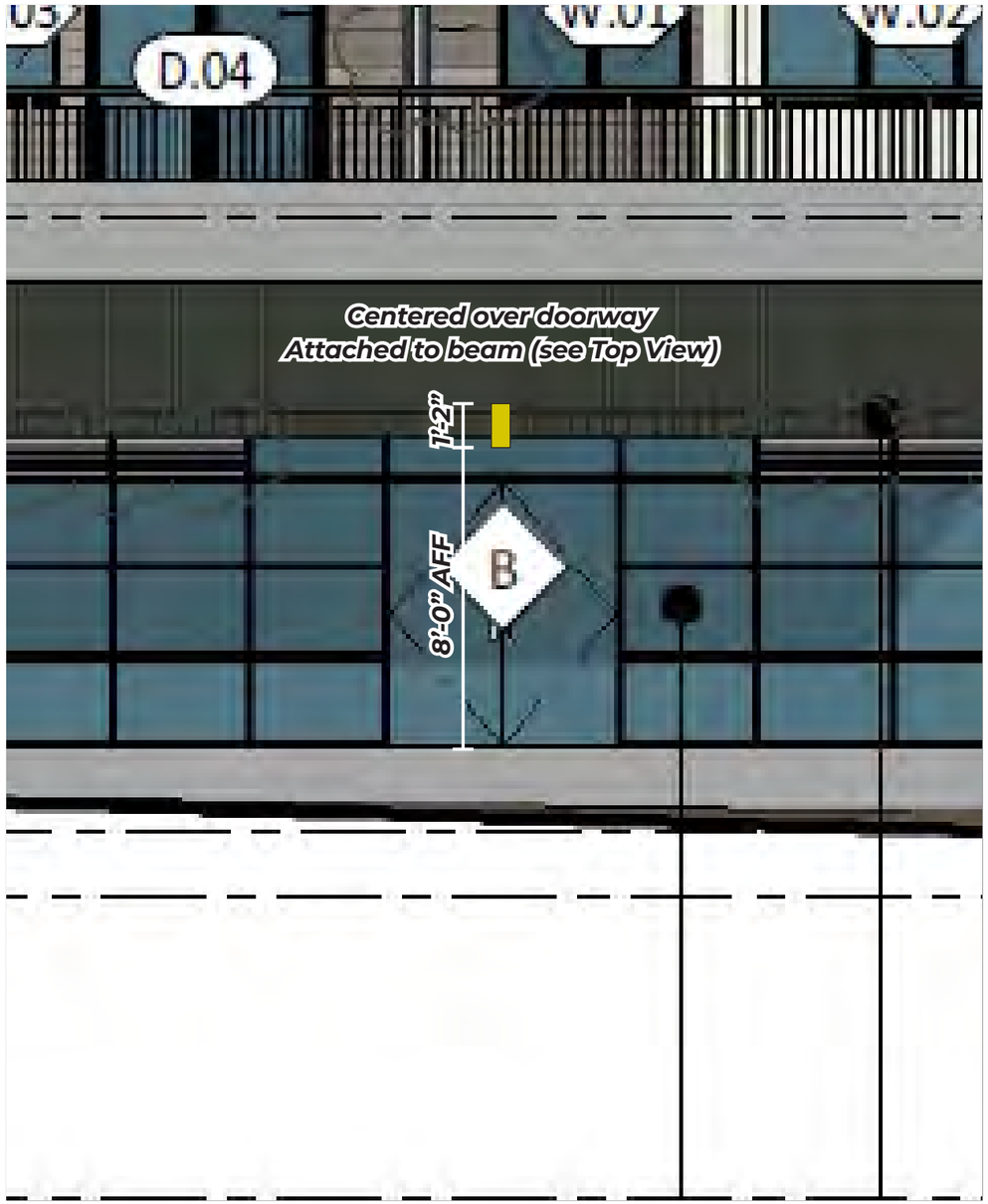

B2 West Elevation
Scale: 1/4"=1'-0"

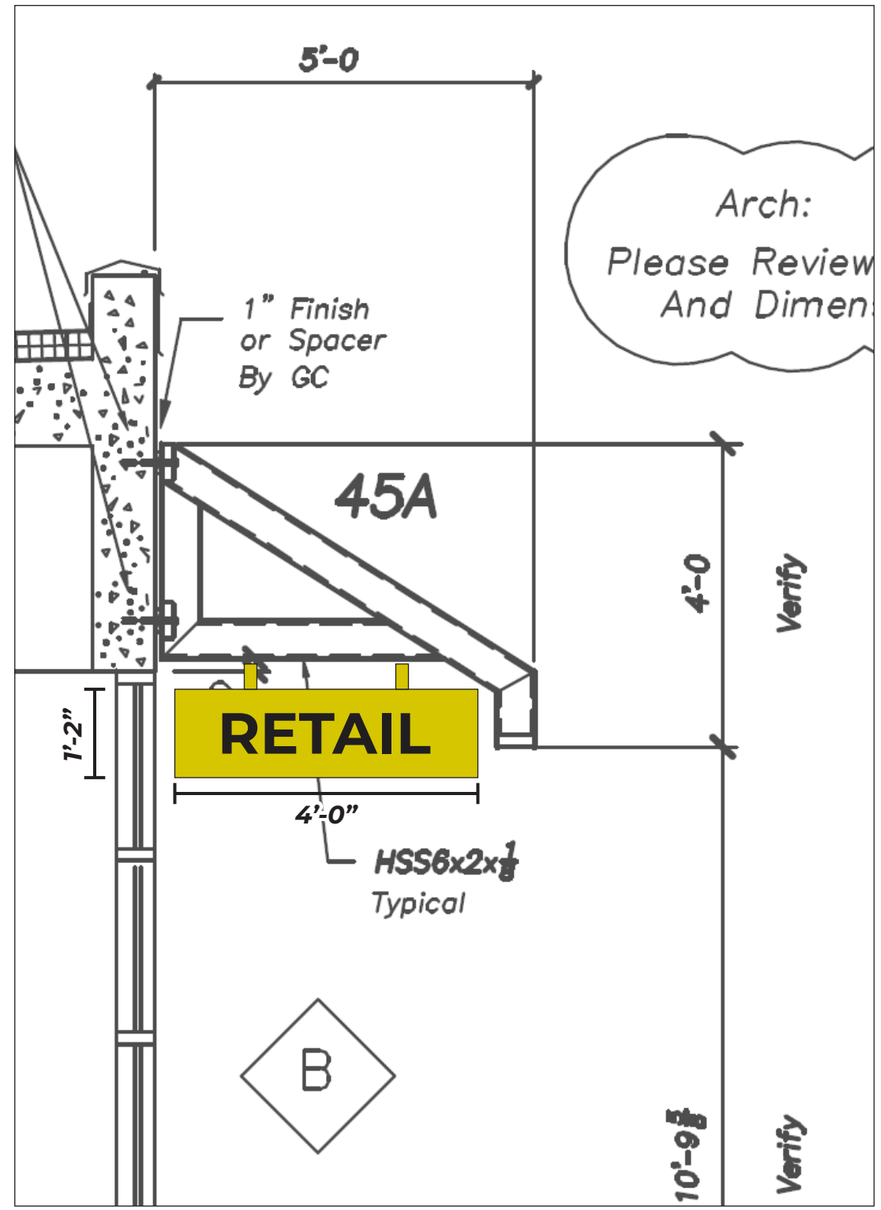

END VIEW
Scale: 1/2" = 1'-0"

A DESIGN STUDIO

MAIN CONTACT
Gracia Mueller
360.929.3077

CREATIVE
Brody Lund
425.359.7380

Additional information:
adesignstudioseattle.com

Follow us on social:
@adesignstudioseattle

COPYRIGHT
All artwork contained herein is the copyrighted property of A Design Studio Seattle. This includes, but is not limited to, logos, specifications, artwork and engineering. Any usage beyond internal reviews shall require our appoval and a separate design fee paid to A Design Studio Seattle. Usage rights can also be purchased (limited or complete) for an additional fee. Any unlawful distribution of said artwork is a violation of federal copyright laws.

PROJECT NAME
Terrace Station

PROJECT #
20-004

ADDRESS
24015 Van Ry Blvd
Mountlake Terrace, WA 98043

DATE
12/10/20

VERSION NOTES

V1
V2
V3
V4
V5
V6
V7
V8
V9
V10
V11
V12
V13
V14
V15

PAGE SCALE
As Noted

PAGE #
124.1

B2-S36.1 - DETAILS

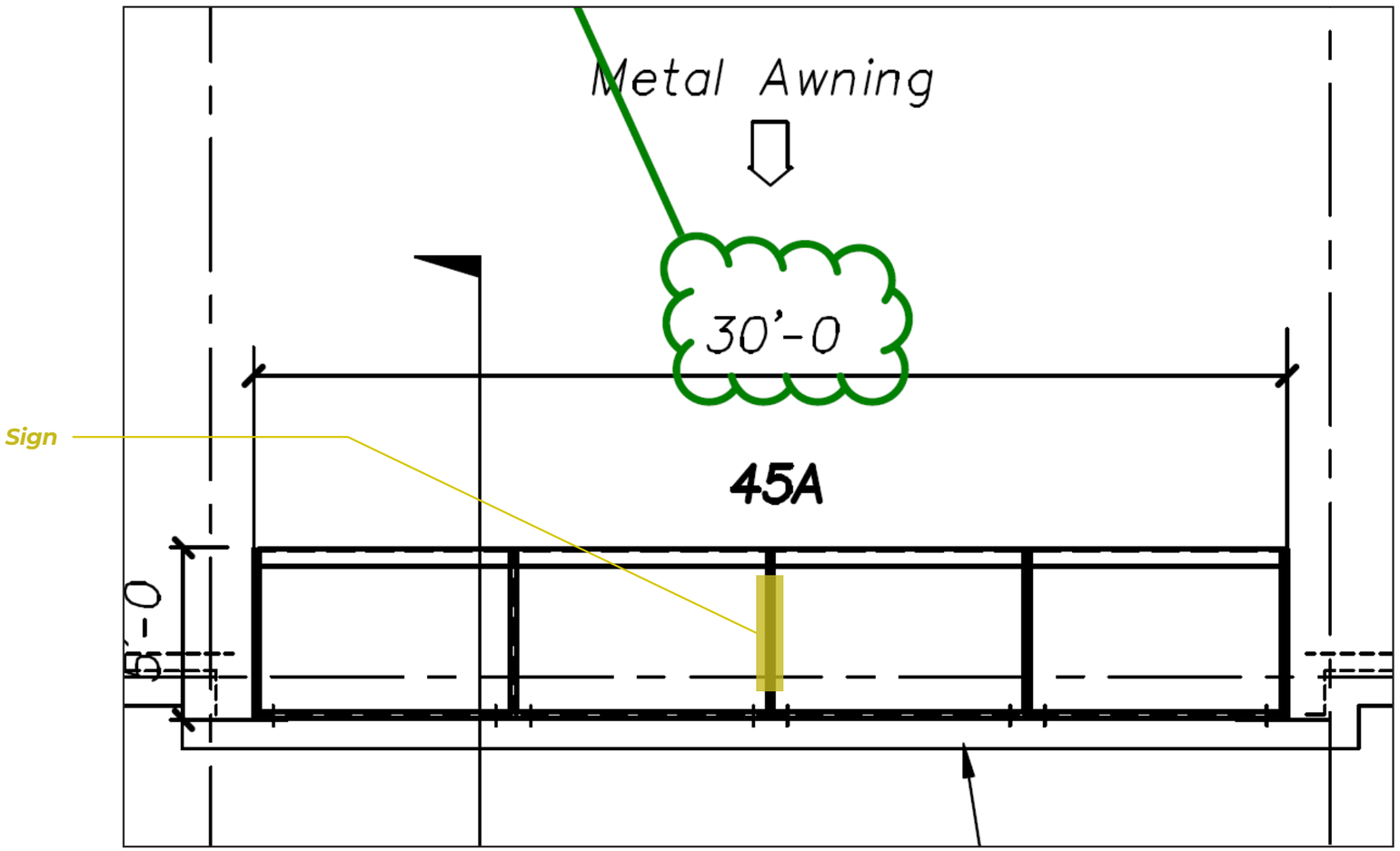

TOP VIEW
Scale: 1/4" = 1'-0"

A DESIGN STUDIO

MAIN CONTACT
Gracia Mueller
360.929.3077

CREATIVE
Brody Lund
425.359.7380

Additional information:
adesignstudioseattle.com

Follow us on social:
@adesignstudioseattle

COPYRIGHT
All artwork contained herein is the copyrighted property of A Design Studio Seattle. This includes, but is not limited to, logos, specifications, artwork and engineering. Any usage beyond internal reviews shall require our appoval and a separate design fee paid to A Design Studio Seattle. Usage rights can also be purchased (limited or complete) for an additional fee. Any unlawful distribution of said artwork is a violation of federal copyright laws.

PROJECT NAME
Terrace Station

PROJECT #
20-004

ADDRESS
24015 Van Ry Blvd
Mountlake Terrace, WA 98043

DATE
12/10/20

VERSION NOTES

V1
V2
V3
V4
V5
V6
V7
V8
V9
V10
V11
V12
V13
V14
V15

PAGE SCALE
1/4" = 1'-0"

PAGE #
124.2

B2-S37 - ELEVATIONS

Sign Area: 40.0 Square Feet

B2 West Elevation

A DESIGN STUDIO

MAIN CONTACT
Gracia Mueller
360.929.3077

CREATIVE
Brody Lund
425.359.7380

Additional information:
adesignstudioseattle.com

Follow us on social:
@adesignstudioseattle

COPYRIGHT
All artwork contained herein is the copyrighted property of A Design Studio Seattle. This includes, but is not limited to, logos, specifications, artwork and engineering. Any usage beyond internal reviews shall require our appoval and a separate design fee paid to A Design Studio Seattle. Usage rights can also be purchased (limited or complete) for an additional fee. Any unlawful distribution of said artwork is a violation of federal copyright laws.

PROJECT NAME
Terrace Station

PROJECT #
20-004

ADDRESS
24015 Van Ry Blvd
Mountlake Terrace, WA 98043

DATE
12/10/20

VERSION NOTES

V1
V2
V3
V4
V5
V6
V7
V8
V9
V10
V11
V12
V13
V14
V15

PAGE SCALE
1/4" = 1'-0"

PAGE #

B2-S37 - ATTACHMENT DETAILS

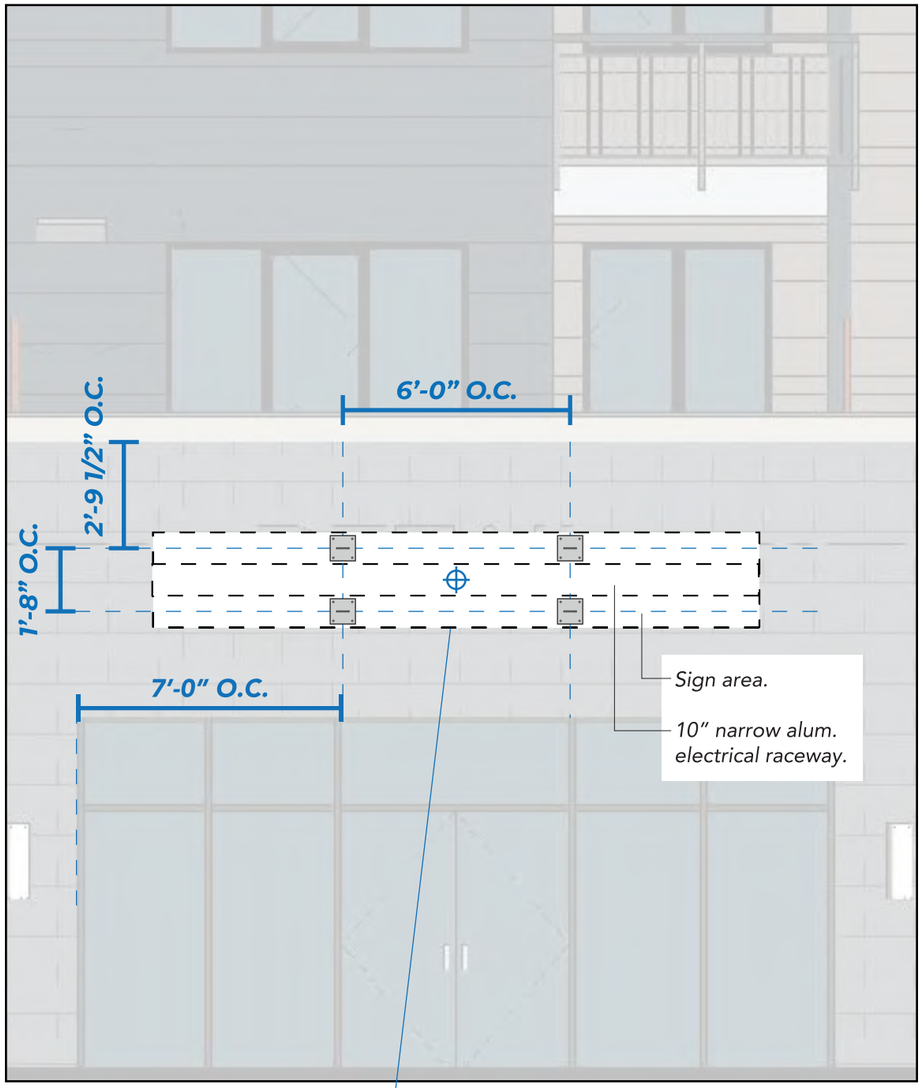

B2 West Elevation
Scale: 1/4"=1'-0"

Primary Electrical Location
Client to provide 20 Amp / 120 Volt dedicated circuit to sign location

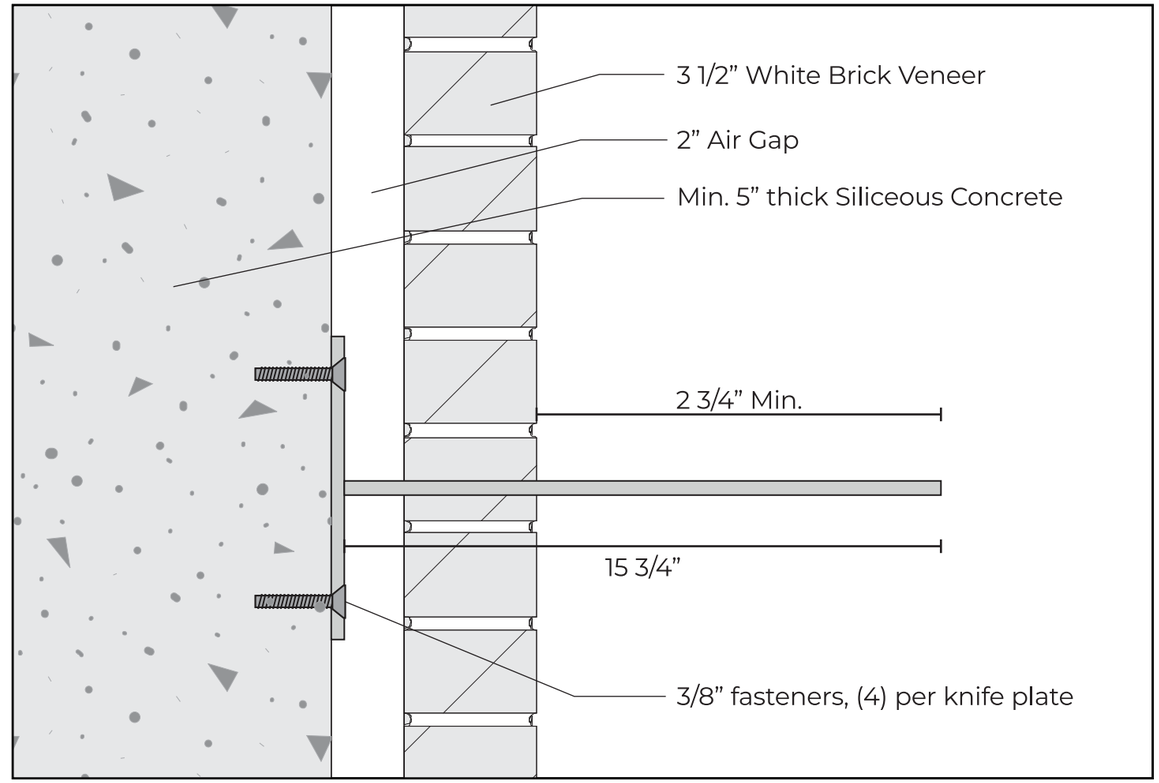

Knife Plate Install Detail
Scale: 3"=1'-0"

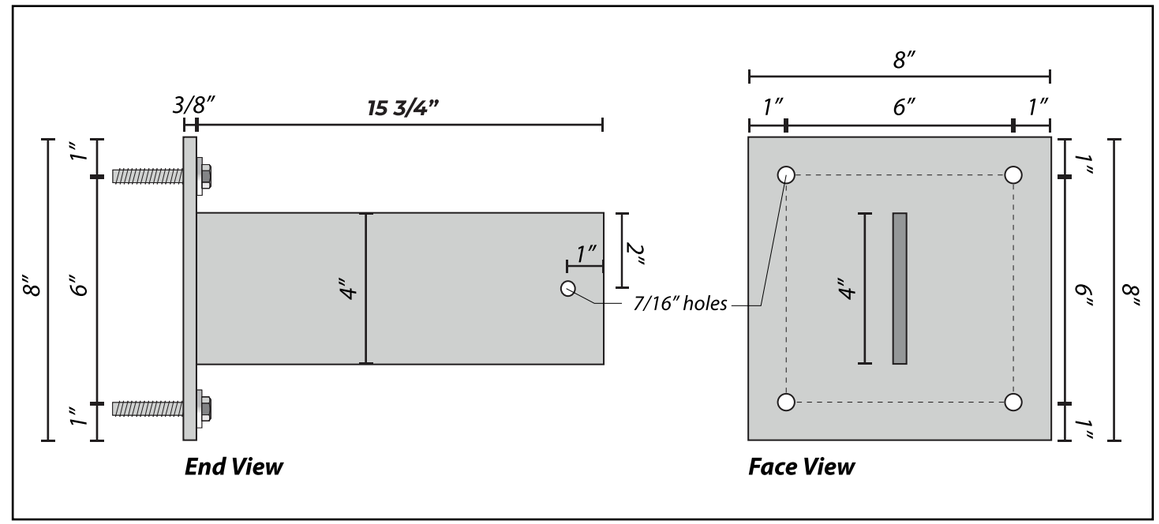

3/8" x 8" x 8" Steel Plate Detail
Scale: 3"=1'-0"

A DESIGN STUDIO

MAIN CONTACT
Gracia Mueller
360.929.3077

CREATIVE
Brody Lund
425.359.7380

Additional information:
adesignstudioseattle.com

Follow us on social:
@adesignstudioseattle

COPYRIGHT
All artwork contained herein is the copyrighted property of A Design Studio Seattle. This includes, but is not limited to, logos, specifications, artwork and engineering. Any usage beyond internal reviews shall require our appoval and a separate design fee paid to A Design Studio Seattle. Usage rights can also be purchased (limited or complete) for an additional fee. Any unlawful distribution of said artwork is a violation of federal copyright laws.

PROJECT NAME
Terrace Station

PROJECT #
20-004

ADDRESS
24015 Van Ry Blvd
Mountlake Terrace, WA 98043

DATE
12/10/20

VERSION NOTES

V1
V2
V3
V4
V5
V6
V7
V8
V9
V10
V11
V12
V13
V14
V15

PAGE SCALE
As Noted

PAGE #
126

B2-S37.1 - ELEVATIONS

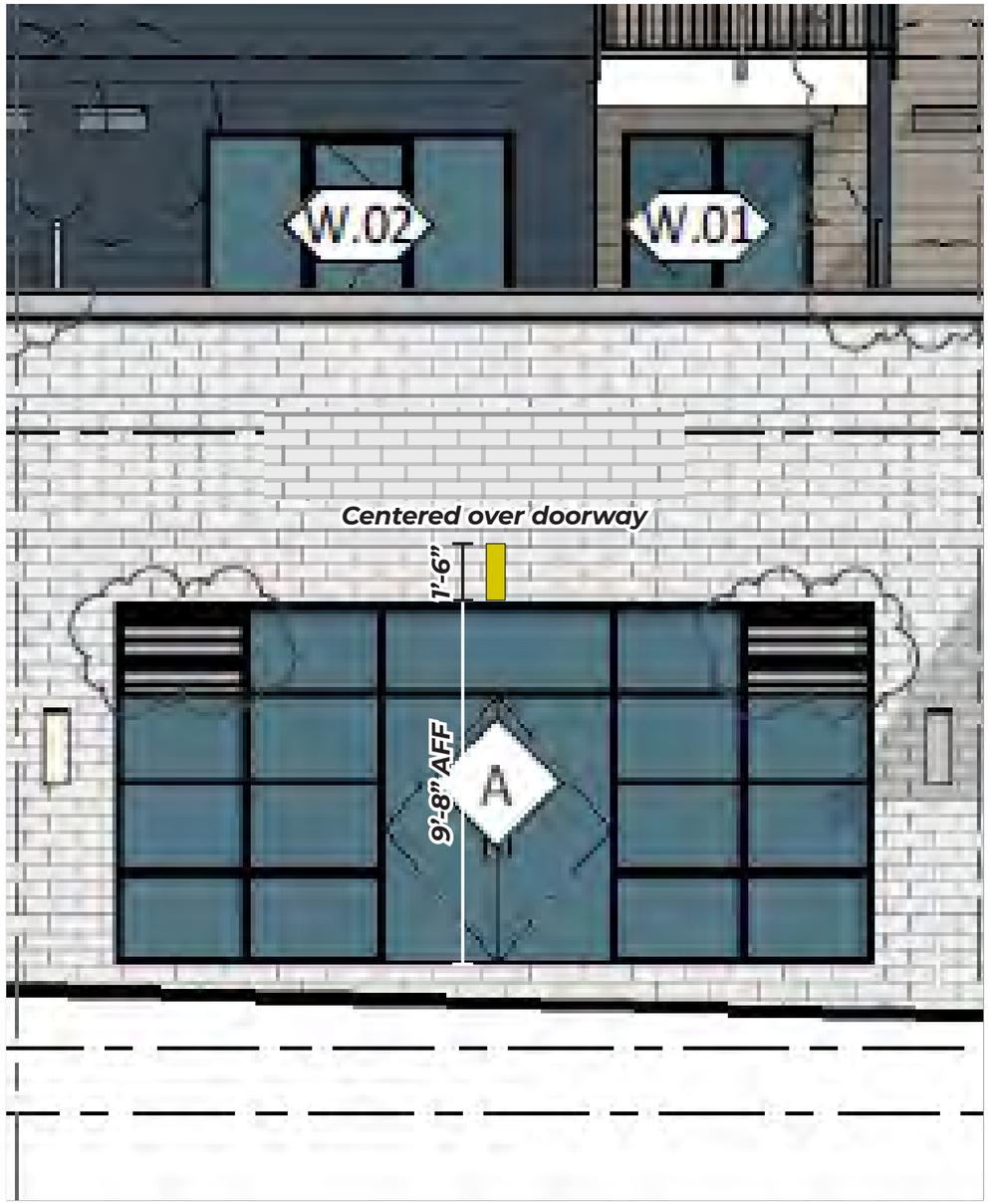

B2 West Elevation
Scale: 1/4"=1'-0"

FINAL LOCATION, ATTACHMENT METHOD PENDING SURVEY

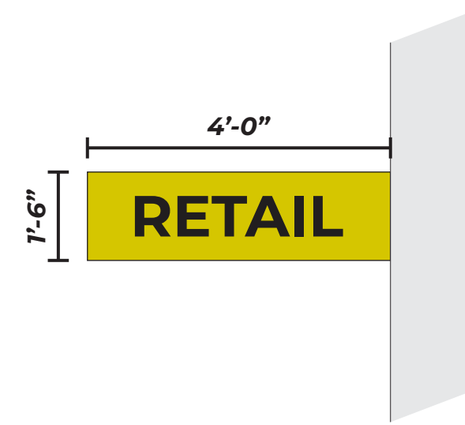

END VIEW
Scale: 1/2" = 1'-0"

A DESIGN STUDIO

MAIN CONTACT
Gracia Mueller
360.929.3077

CREATIVE
Brody Lund
425.359.7380

Additional information:
adesignstudioseattle.com

Follow us on social:
@adesignstudioseattle

COPYRIGHT
All artwork contained herein is the copyrighted property of A Design Studio Seattle. This includes, but is not limited to, logos, specifications, artwork and engineering. Any usage beyond internal reviews shall require our appoval and a separate design fee paid to A Design Studio Seattle. Usage rights can also be purchased (limited or complete) for an additional fee. Any unlawful distribution of said artwork is a violation of federal copyright laws.

PROJECT NAME
Terrace Station

PROJECT #
20-004

ADDRESS
24015 Van Ry Blvd
Mountlake Terrace, WA 98043

DATE
12/10/20

VERSION NOTES

V1
V2
V3
V4
V5
V6
V7
V8
V9
V10
V11
V12
V13
V14
V15

PAGE SCALE
As Noted

PAGE #
126.1

B2-S38 - ELEVATIONS

Sign Area: 40.0 Square Feet

B2 West Elevation

A DESIGN STUDIO

MAIN CONTACT
Gracia Mueller
360.929.3077

CREATIVE
Brody Lund
425.359.7380

Additional information:
adesignstudioseattle.com

Follow us on social:
@adesignstudioseattle

COPYRIGHT
All artwork contained herein is the copyrighted property of A Design Studio Seattle. This includes, but is not limited to, logos, specifications, artwork and engineering. Any usage beyond internal reviews shall require our appoval and a separate design fee paid to A Design Studio Seattle. Usage rights can also be purchased (limited or complete) for an additional fee. Any unlawful distribution of said artwork is a violation of federal copyright laws.

PROJECT NAME
Terrace Station

PROJECT #
20-004

ADDRESS
24015 Van Ry Blvd
Mountlake Terrace, WA 98043

DATE
12/10/20

VERSION NOTES

V1
V2
V3
V4
V5
V6
V7
V8
V9
V10
V11
V12
V13
V14
V15

PAGE SCALE
1/4" = 1'-0"

PAGE #

B2-S38 - ATTACHMENT DETAILS

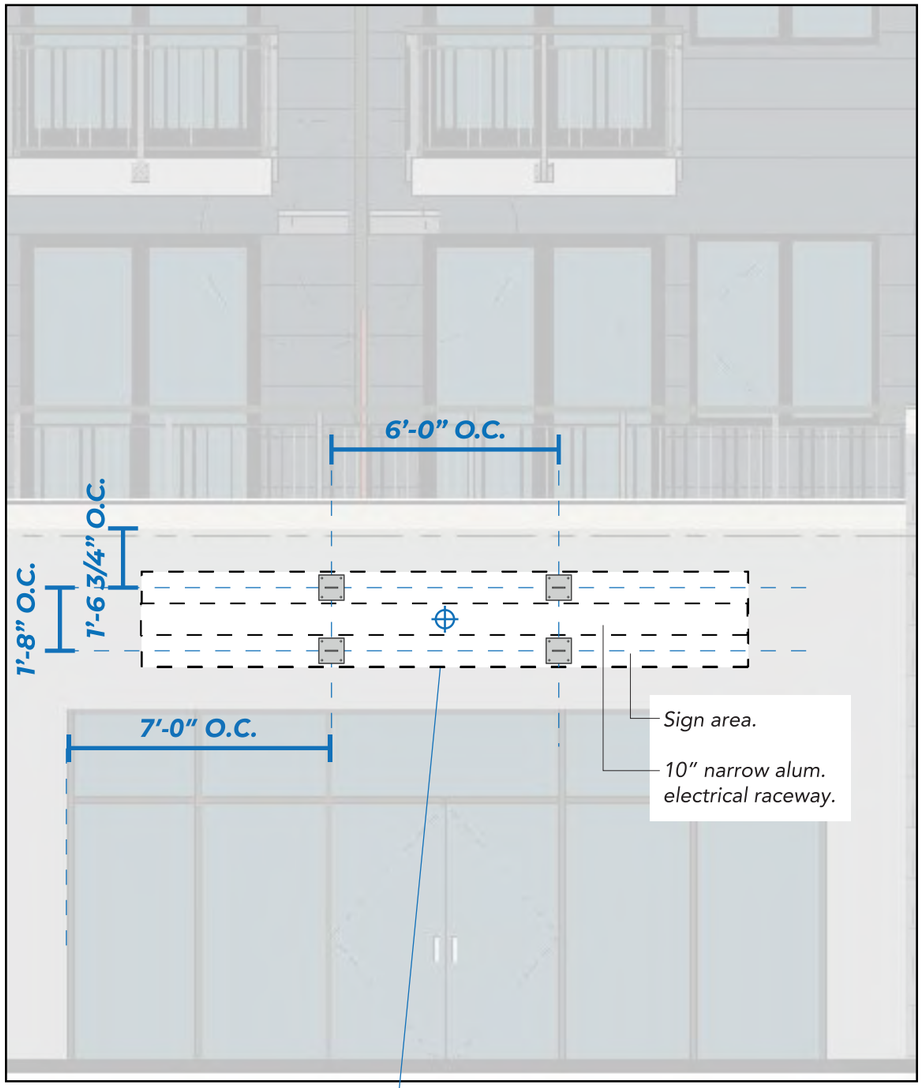

B2 West Elevation
Scale: 1/4"=1'-0"

Primary Electrical Location
Client to provide 20 Amp / 120 Volt dedicated circuit to sign location

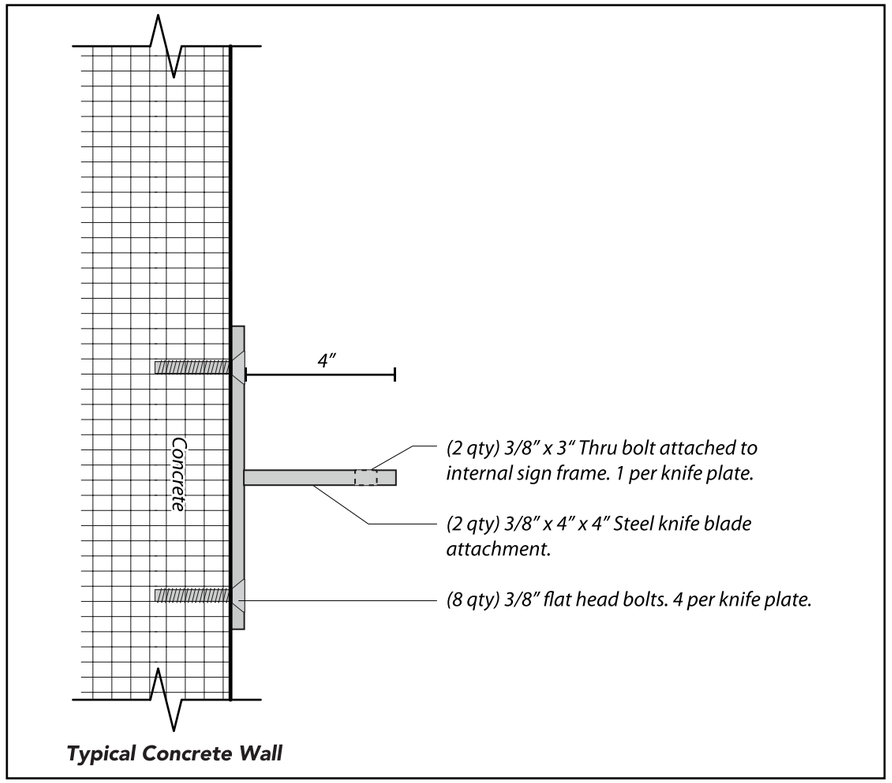

Knife Plate Install Detail
Scale: 3"=1'-0"

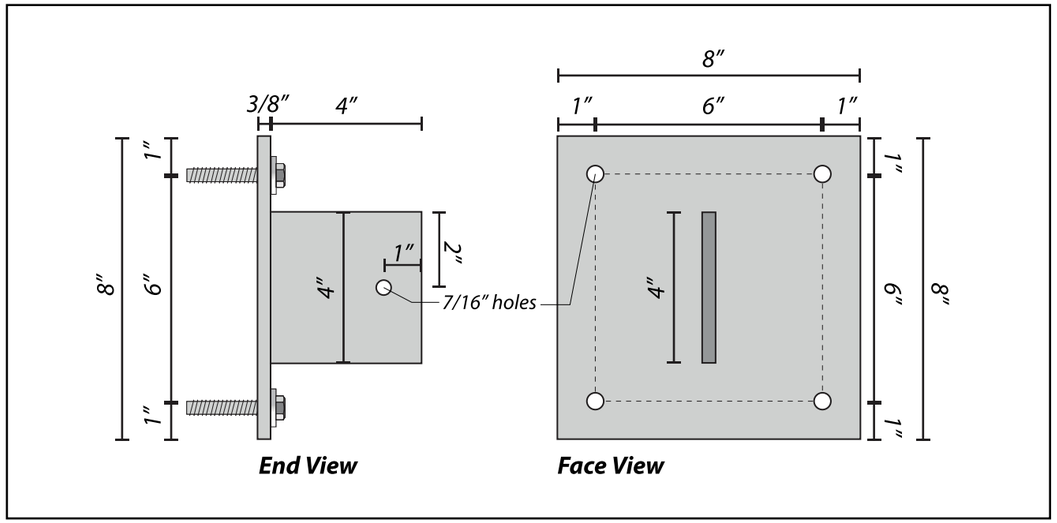

3/8" x 8" x 8" Steel Plate Detail
Scale: 3"=1'-0"

A DESIGN STUDIO

MAIN CONTACT
Gracia Mueller
360.929.3077

CREATIVE
Brody Lund
425.359.7380

Additional information:
adesignstudioseattle.com

Follow us on social:
@adesignstudioseattle

COPYRIGHT
All artwork contained herein is the copyrighted property of A Design Studio Seattle. This includes, but is not limited to, logos, specifications, artwork and engineering. Any usage beyond internal reviews shall require our appoval and a separate design fee paid to A Design Studio Seattle. Usage rights can also be purchased (limited or complete) for an additional fee. Any unlawful distribution of said artwork is a violation of federal copyright laws.

PROJECT NAME
Terrace Station

PROJECT #
20-004

ADDRESS
24015 Van Ry Blvd
Mountlake Terrace, WA 98043

DATE
12/10/20

VERSION NOTES
V1
V2
V3
V4
V5
V6
V7
V8
V9
V10
V11
V12
V13
V14
V15

PAGE SCALE
As Noted

PAGE #
128

B2-S38.1 - ELEVATIONS

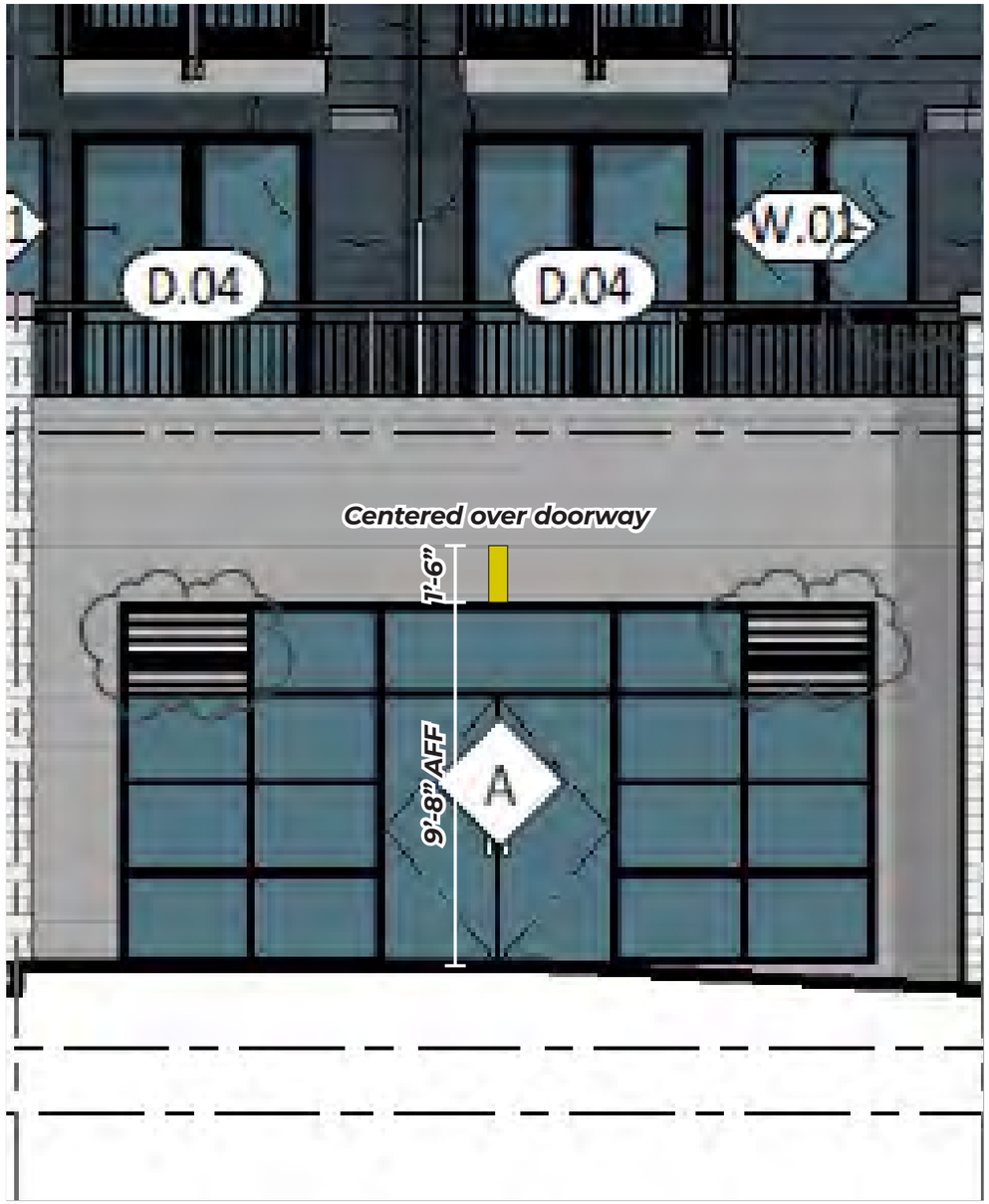

B2 West Elevation
Scale: 1/4"=1'-0"

FINAL LOCATION, ATTACHMENT METHOD, AND ELECTRICAL PENDING SURVEY

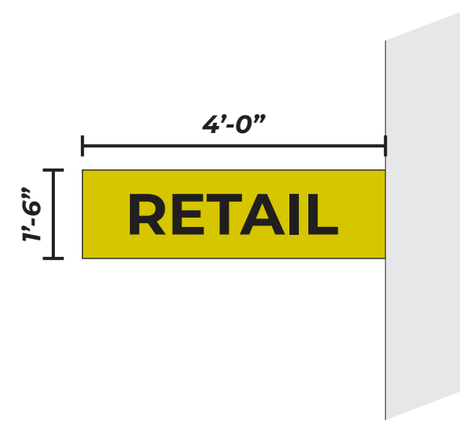

END VIEW
Scale: 1/2" = 1'-0"

A DESIGN STUDIO

MAIN CONTACT
Gracia Mueller
360.929.3077

CREATIVE
Brody Lund
425.359.7380

Additional information:
adesignstudioseattle.com

Follow us on social:
@adesignstudioseattle

COPYRIGHT
All artwork contained herein is the copyrighted property of A Design Studio Seattle. This includes, but is not limited to, logos, specifications, artwork and engineering. Any usage beyond internal reviews shall require our appoval and a separate design fee paid to A Design Studio Seattle. Usage rights can also be purchased (limited or complete) for an additional fee. Any unlawful distribution of said artwork is a violation of federal copyright laws.

PROJECT NAME
Terrace Station

PROJECT #
20-004

ADDRESS
24015 Van Ry Blvd
Mountlake Terrace, WA 98043

DATE
12/10/20

VERSION NOTES

V1
V2
V3
V4
V5
V6
V7
V8
V9
V10
V11
V12
V13
V14
V15

PAGE SCALE
As Noted

PAGE #
128.1

B2-S39 - ELEVATIONS

Sign Area: 40.0 Square Feet

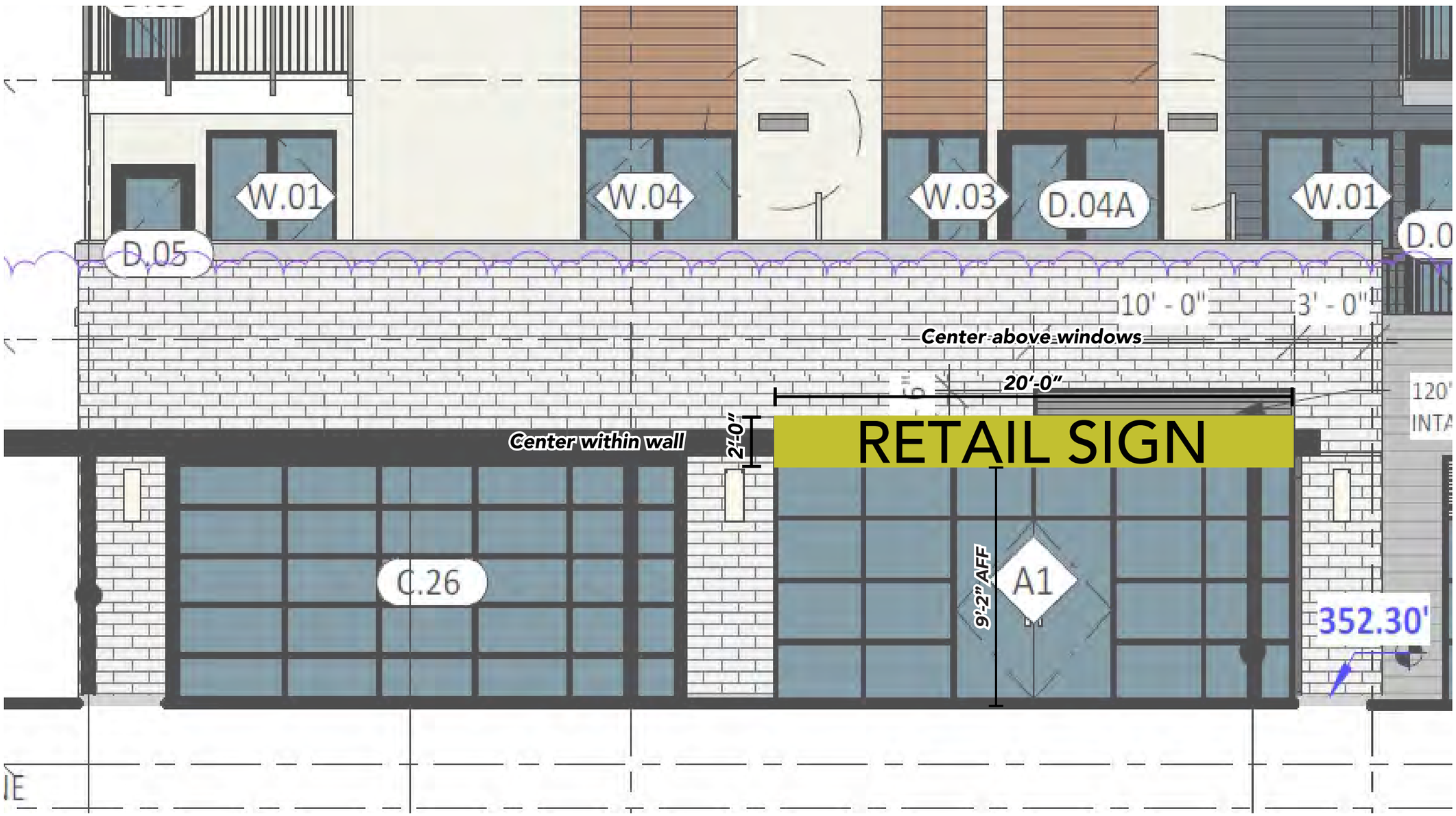

B2 West Elevation

A DESIGN STUDIO

MAIN CONTACT
Gracia Mueller
360.929.3077

CREATIVE
Brody Lund
425.359.7380

Additional information:
adesignstudioseattle.com

Follow us on social:
@adesignstudioseattle

COPYRIGHT
All artwork contained herein is the copyrighted property of A Design Studio Seattle. This includes, but is not limited to, logos, specifications, artwork and engineering. Any usage beyond internal reviews shall require our appoval and a separate design fee paid to A Design Studio Seattle. Usage rights can also be purchased (limited or complete) for an additional fee. Any unlawful distribution of said artwork is a violation of federal copyright laws.

PROJECT NAME
Terrace Station

PROJECT #
20-004

ADDRESS
24015 Van Ry Blvd
Mountlake Terrace, WA 98043

DATE
12/10/20

VERSION NOTES

V1
V2
V3
V4
V5
V6
V7
V8
V9
V10
V11
V12
V13
V14
V15

PAGE SCALE
1/4" = 1'-0"

PAGE #

B2-S39 - ATTACHMENT DETAILS

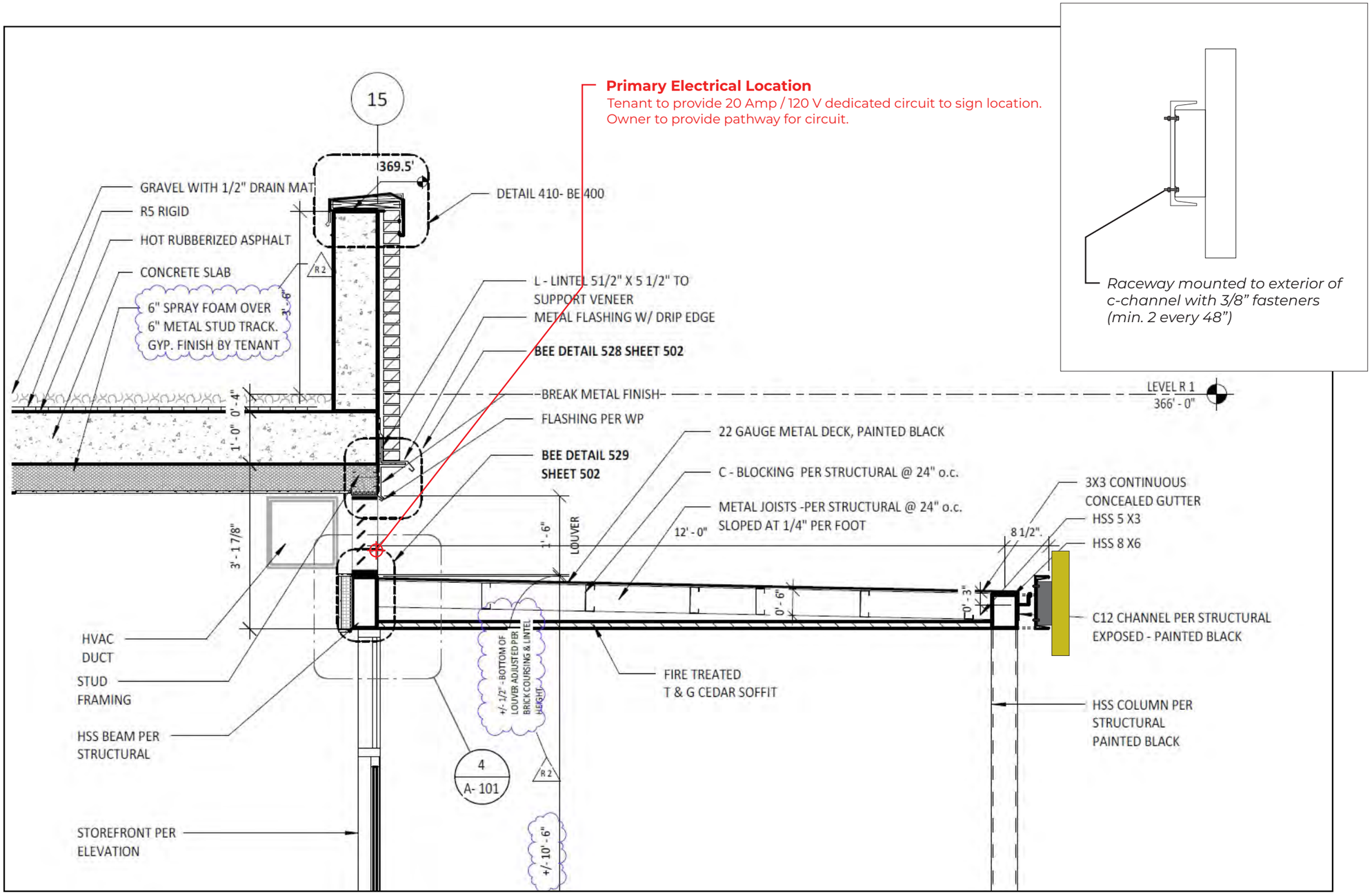

CANOPY - END VIEW
Scale: 1/2" = 1'-0"

A DESIGN STUDIO

MAIN CONTACT
Gracia Mueller
360.929.3077

CREATIVE
Brody Lund
425.359.7380

Additional information:
adesignstudioseattle.com

Follow us on social:
@adesignstudioseattle

COPYRIGHT
All artwork contained herein is the copyrighted property of A Design Studio Seattle. This includes, but is not limited to, logos, specifications, artwork and engineering. Any usage beyond internal reviews shall require our appoval and a separate design fee paid to A Design Studio Seattle. Usage rights can also be purchased (limited or complete) for an additional fee. Any unlawful distribution of said artwork is a violation of federal copyright laws.

PROJECT NAME
Terrace Station

PROJECT #
20-004

ADDRESS
24015 Van Ry Blvd
Mountlake Terrace, WA 98043

DATE
12/10/20

VERSION NOTES

V1
V2
V3
V4
V5
V6
V7
V8
V9
V10
V11
V12
V13
V14
V15

PAGE SCALE
As Noted

PAGE #
130

B2-S39.1 - ELEVATIONS

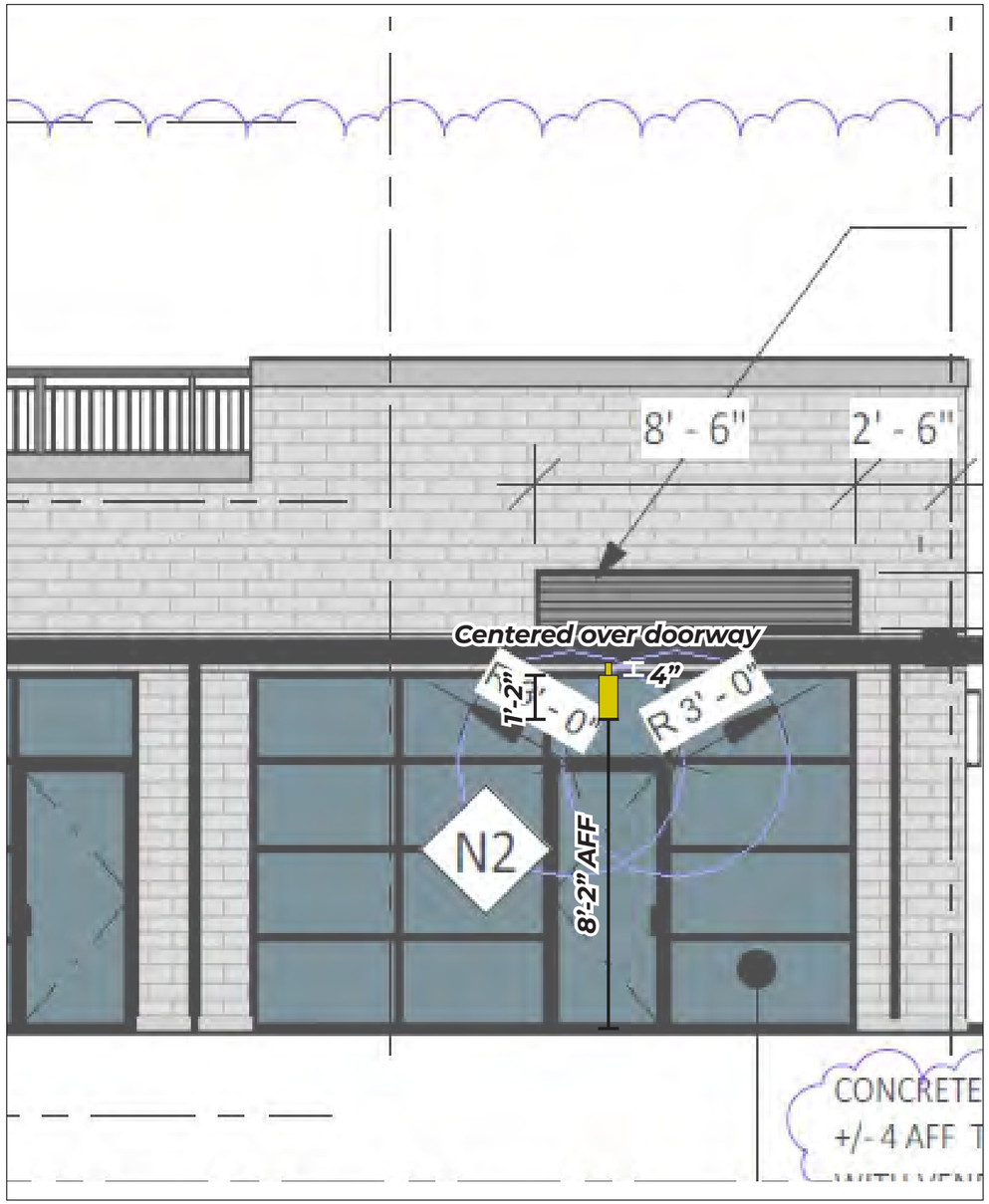

B2 West Elevation
Scale: 1/4"=1'-0"

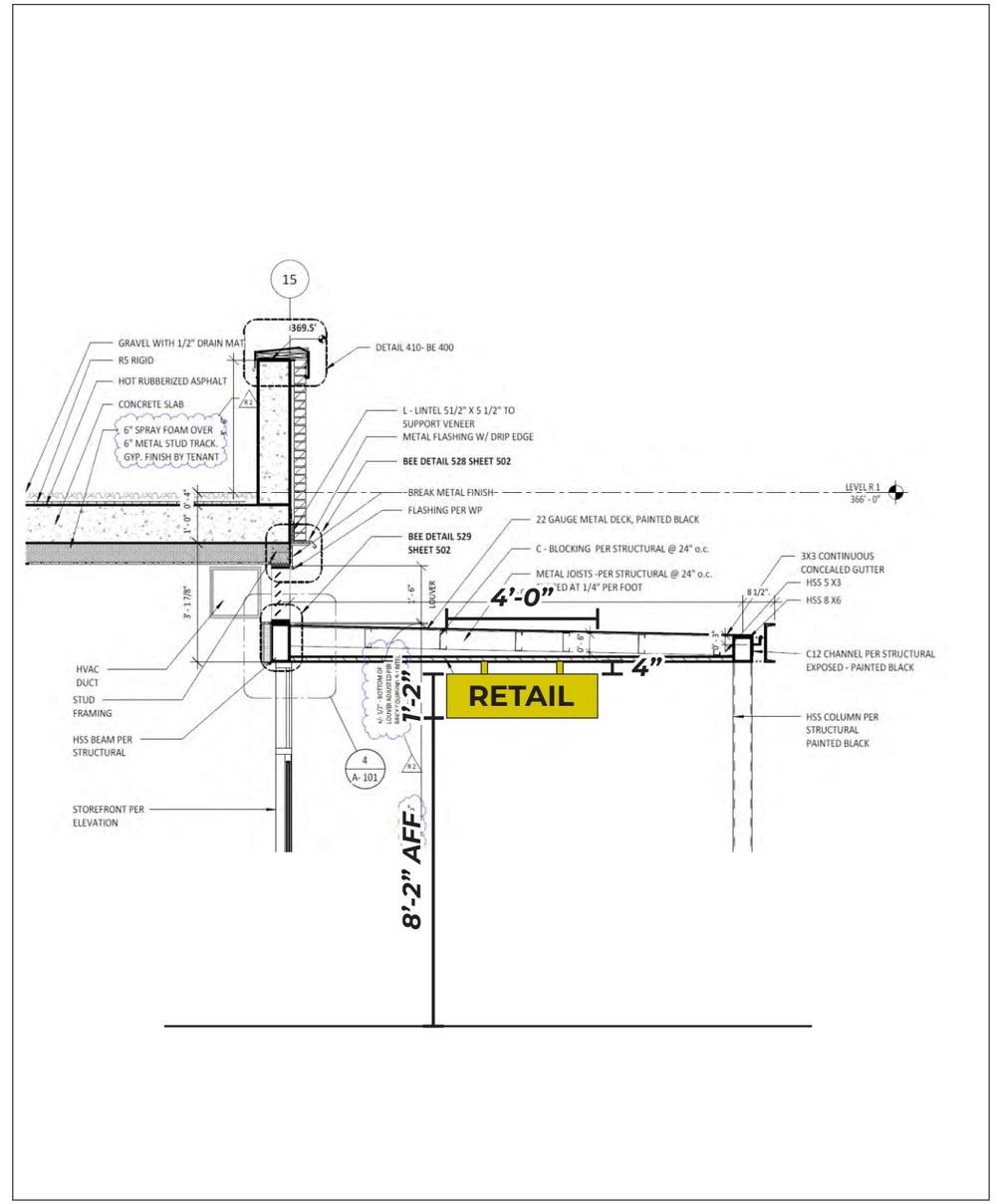

B2 North Elevation
Scale: 1/4"=1'-0"

A DESIGN STUDIO

MAIN CONTACT
Gracia Mueller
360.929.3077

CREATIVE
Brody Lund
425.359.7380

Additional information:
adesignstudioseattle.com

Follow us on social:
@adesignstudioseattle

COPYRIGHT
All artwork contained herein is the copyrighted property of A Design Studio Seattle. This includes, but is not limited to, logos, specifications, artwork and engineering. Any usage beyond internal reviews shall require our appoval and a separate design fee paid to A Design Studio Seattle. Usage rights can also be purchased (limited or complete) for an additional fee. Any unlawful distribution of said artwork is a violation of federal copyright laws.

PROJECT NAME
Terrace Station

PROJECT #
20-004

ADDRESS
24015 Van Ry Blvd
Mountlake Terrace, WA 98043

DATE
12/10/20

VERSION NOTES

V1
V2
V3
V4
V5
V6
V7
V8
V9
V10
V11
V12
V13
V14
V15

PAGE SCALE
1/4" = 1'-0"

PAGE #
130.1

B2-S40 - ELEVATIONS

Sign Area: 40.0 Square Feet

B2 North Elevation

A DESIGN STUDIO

MAIN CONTACT
Gracia Mueller
360.929.3077

CREATIVE
Brody Lund
425.359.7380

Additional information:
adesignstudioseattle.com

Follow us on social:
@adesignstudioseattle

COPYRIGHT
All artwork contained herein is the copyrighted property of A Design Studio Seattle. This includes, but is not limited to, logos, specifications, artwork and engineering. Any usage beyond internal reviews shall require our appoval and a separate design fee paid to A Design Studio Seattle. Usage rights can also be purchased (limited or complete) for an additional fee. Any unlawful distribution of said artwork is a violation of federal copyright laws.

PROJECT NAME
Terrace Station

PROJECT #
20-004

ADDRESS
24015 Van Ry Blvd
Mountlake Terrace, WA 98043

DATE
12/10/20

VERSION NOTES

V1
V2
V3
V4
V5
V6
V7
V8
V9
V10
V11
V12
V13
V14
V15

PAGE SCALE
1/4" = 1'-0"

PAGE #

B2-S40 - ATTACHMENT DETAILS

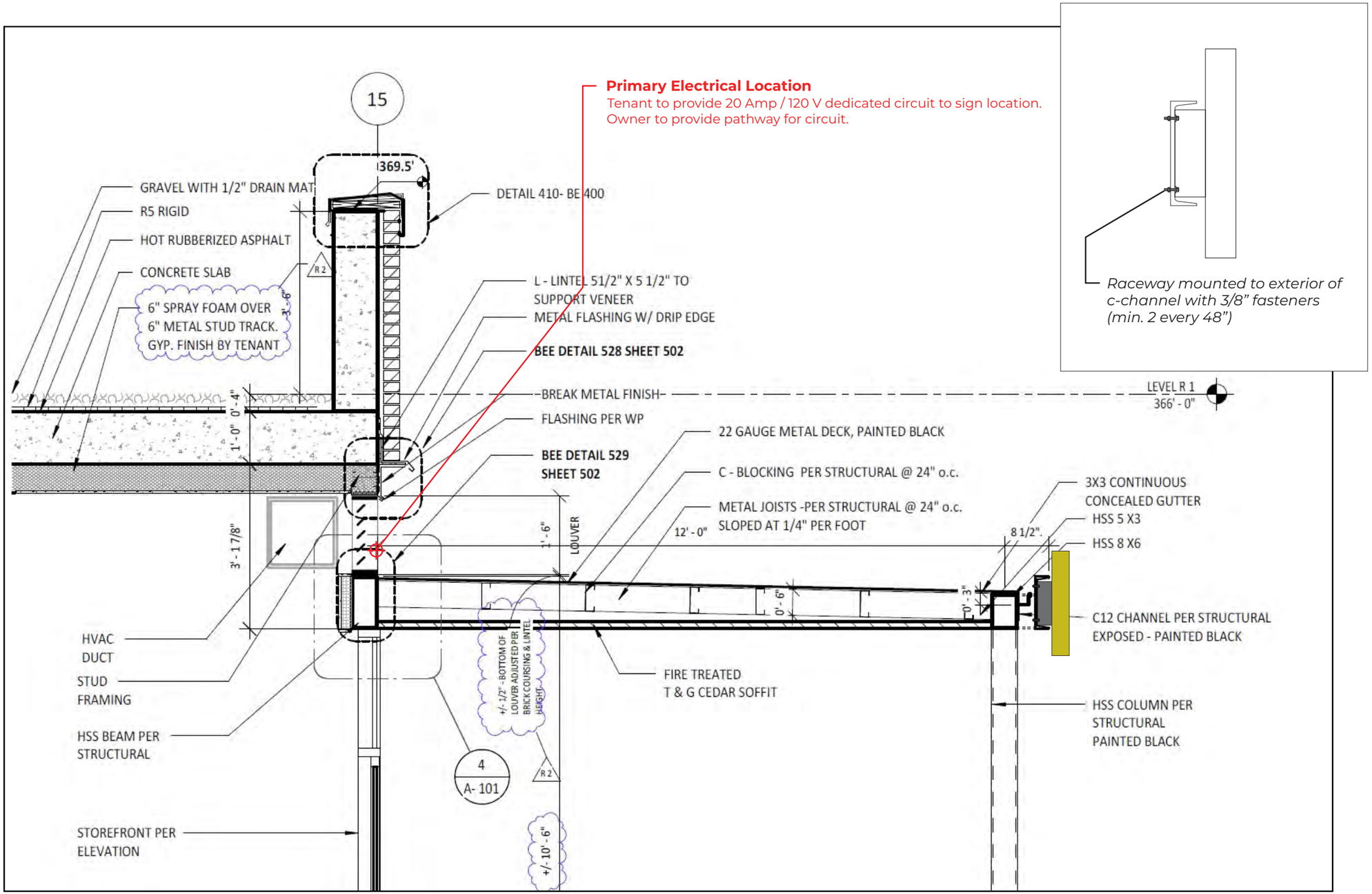

CANOPY - END VIEW
Scale: 1/2" = 1'-0"

A DESIGN STUDIO

MAIN CONTACT
Gracia Mueller
360.929.3077

CREATIVE
Brody Lund
425.359.7380

Additional information:
adesignstudioseattle.com

Follow us on social:
@adesignstudioseattle

COPYRIGHT
All artwork contained herein is the copyrighted property of A Design Studio Seattle. This includes, but is not limited to, logos, specifications, artwork and engineering. Any usage beyond internal reviews shall require our appoval and a separate design fee paid to A Design Studio Seattle. Usage rights can also be purchased (limited or complete) for an additional fee. Any unlawful distribution of said artwork is a violation of federal copyright laws.

PROJECT NAME
Terrace Station

PROJECT #
20-004

ADDRESS
24015 Van Ry Blvd
Mountlake Terrace, WA 98043

DATE
12/10/20

VERSION NOTES

V1
V2
V3
V4
V5
V6
V7
V8
V9
V10
V11
V12
V13
V14
V15

PAGE SCALE
As Noted

PAGE #

B2-S40.1 - ELEVATIONS

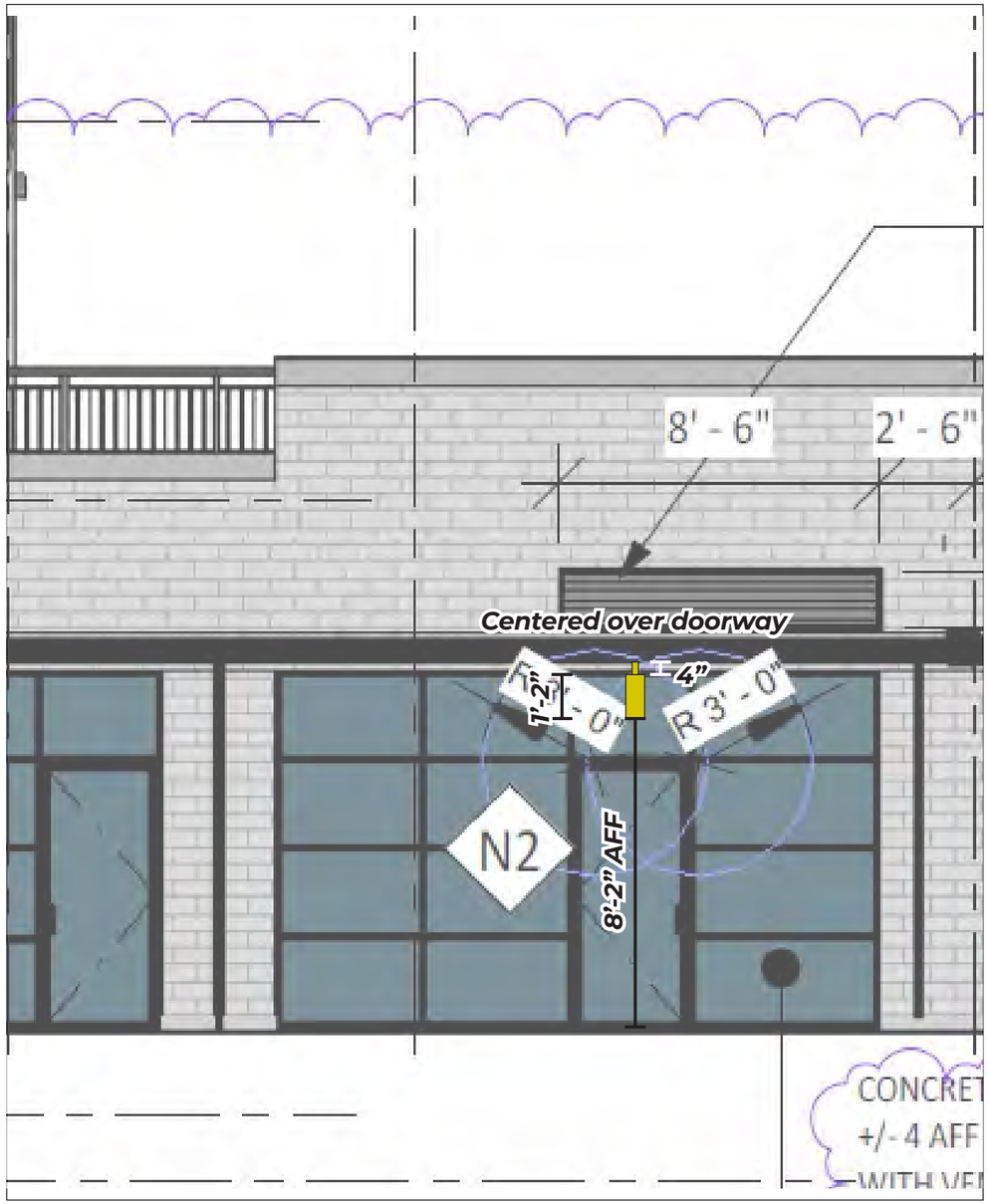

B2 North Elevation
Scale: 1/4"=1'-0"

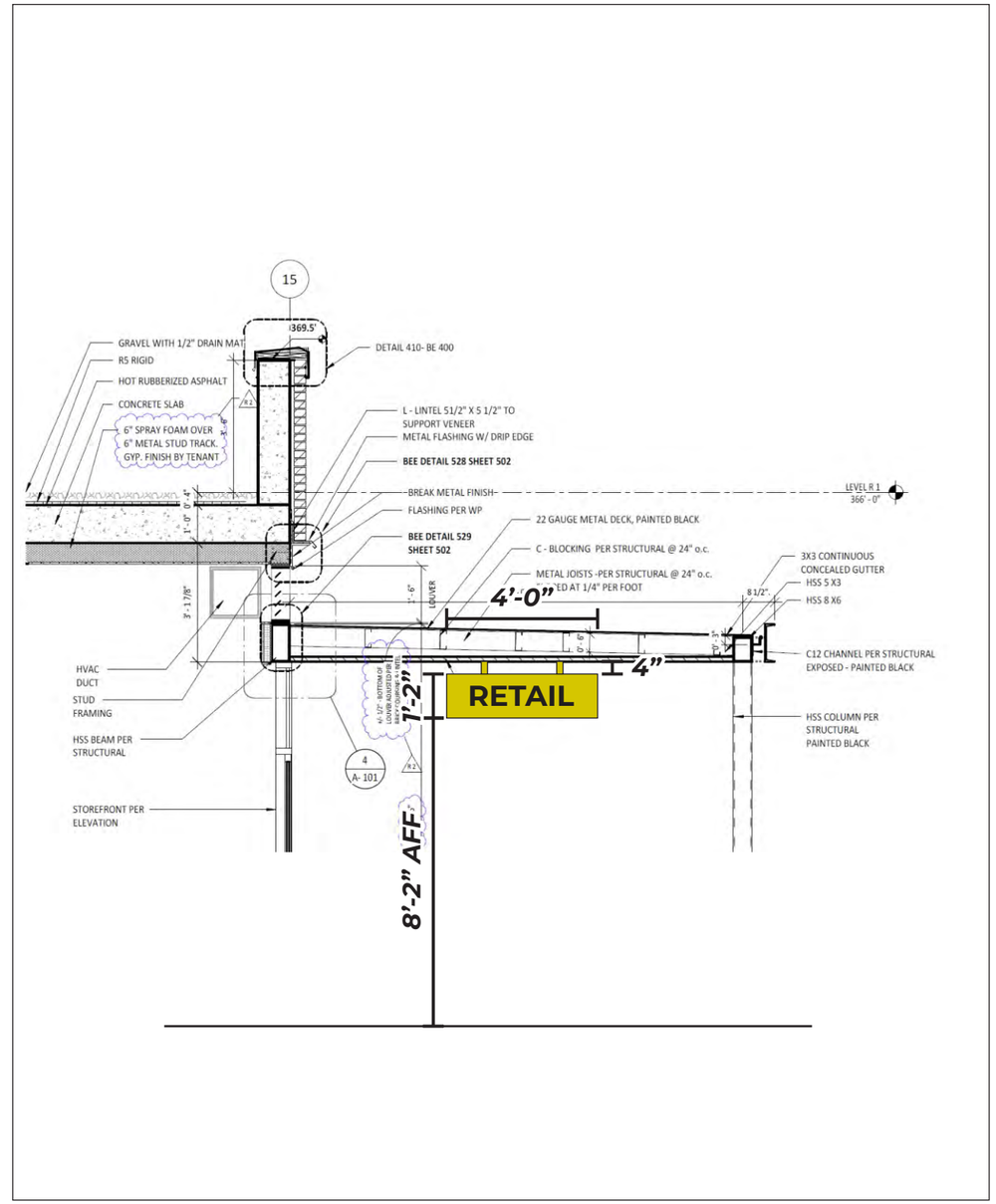

B2 West Elevation
Scale: 1/4"=1'-0"

A DESIGN STUDIO

MAIN CONTACT
Gracia Mueller
360.929.3077

CREATIVE
Brody Lund
425.359.7380

Additional information:
adesignstudioseattle.com

Follow us on social:
@adesignstudioseattle

COPYRIGHT
All artwork contained herein is the copyrighted property of A Design Studio Seattle. This includes, but is not limited to, logos, specifications, artwork and engineering. Any usage beyond internal reviews shall require our appoval and a separate design fee paid to A Design Studio Seattle. Usage rights can also be purchased (limited or complete) for an additional fee. Any unlawful distribution of said artwork is a violation of federal copyright laws.

PROJECT NAME
Terrace Station

PROJECT #
20-004

ADDRESS
24015 Van Ry Blvd
Mountlake Terrace, WA 98043

DATE
12/10/20

VERSION NOTES

V1
V2
V3
V4
V5
V6
V7
V8
V9
V10
V11
V12
V13
V14
V15

PAGE SCALE
1/4" = 1'-0"

PAGE #
132.1

B2-S41 - ELEVATION

B2 South Elevation

A DESIGN STUDIO

MAIN CONTACT
Gracia Mueller
360.929.3077

CREATIVE
Brody Lund
425.359.7380

Additional information:
adesignstudioseattle.com

Follow us on social:
@adesignstudioseattle

COPYRIGHT
All artwork contained herein is the copyrighted property of A Design Studio Seattle. This includes, but is not limited to, logos, specifications, artwork and engineering. Any usage beyond internal reviews shall require our appoval and a separate design fee paid to A Design Studio Seattle. Usage rights can also be purchased (limited or complete) for an additional fee. Any unlawful distribution of said artwork is a violation of federal copyright laws.

PROJECT NAME
Terrace Station

PROJECT #
20-004

ADDRESS
24015 Van Ry Blvd
Mountlake Terrace, WA 98043

DATE
12/10/20

VERSION NOTES

V1
V2
V3
V4
V5
V6
V7
V8
V9
V10
V11
V12
V13
V14
V15

PAGE SCALE
1/4" = 1'-0"

PAGE #
133

B2-S41 - ELEVATION

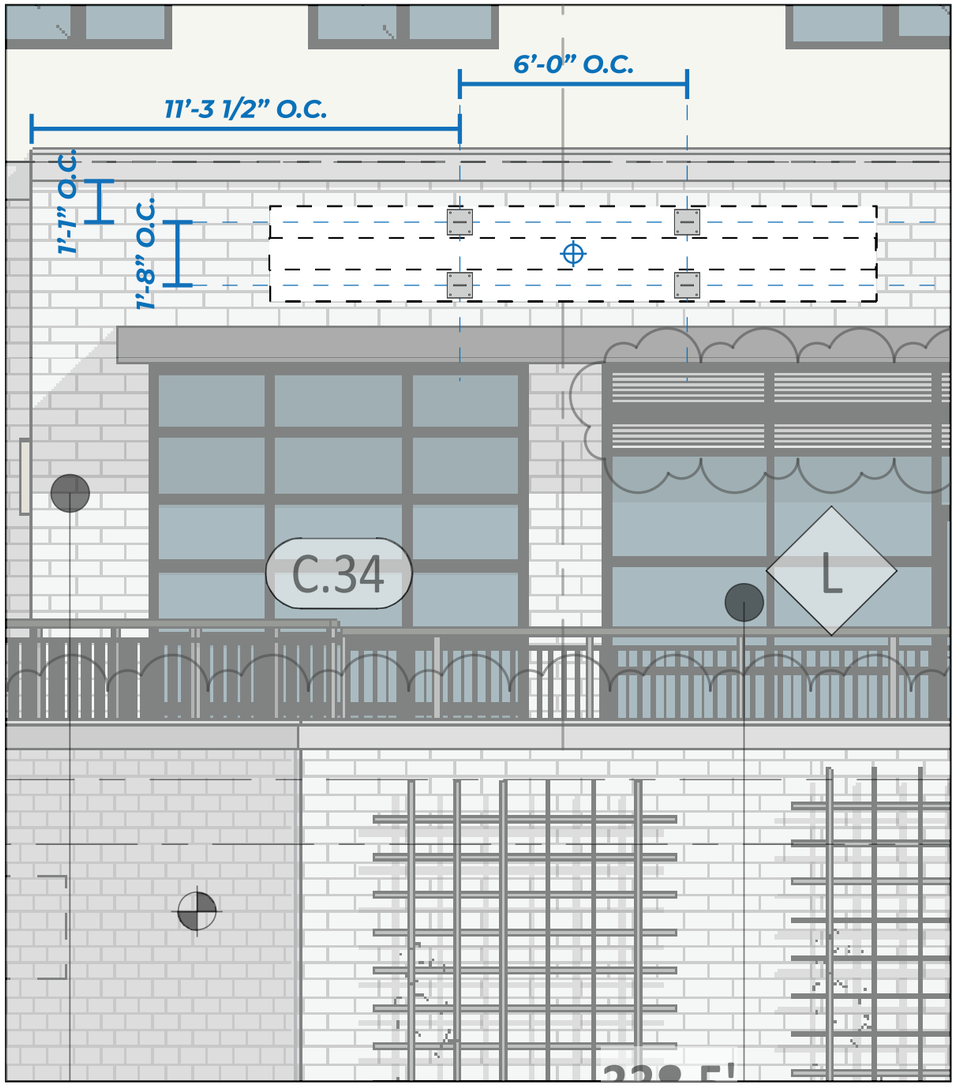

B2 South Elevation
Scale: 1/4" = 1'-0"

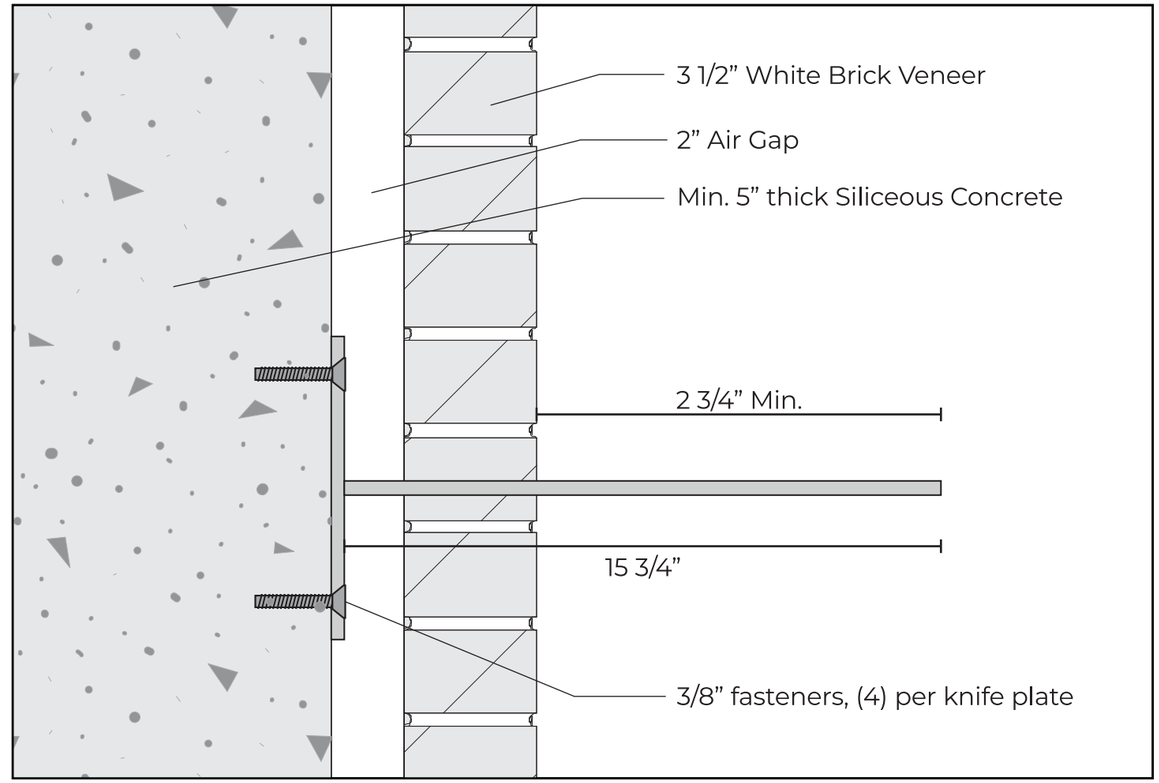

Knife Plate Install Detail
Scale: 3"=1'-0"

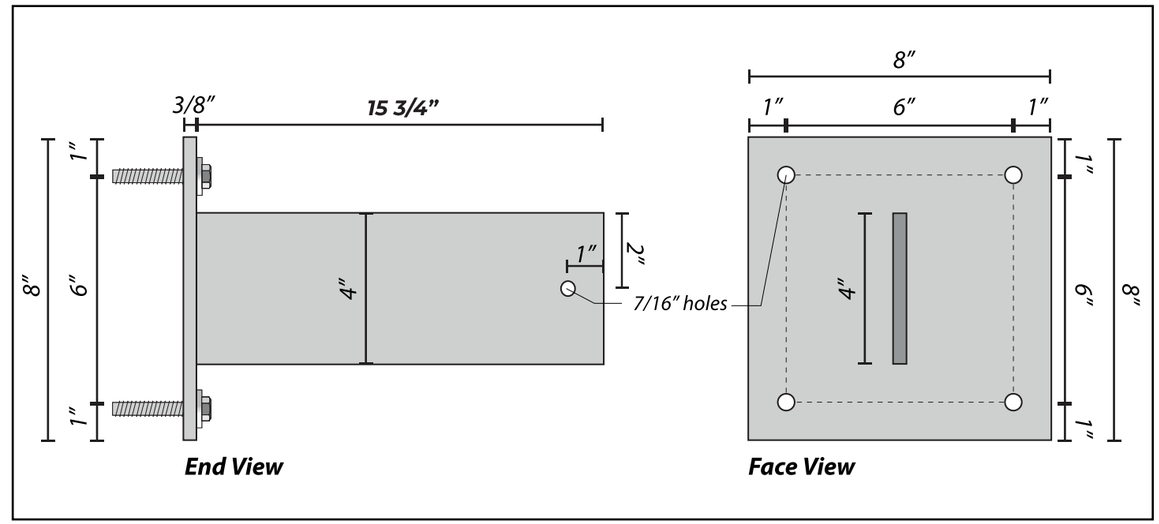

3/8" x 8" x 8" Steel Plate Detail
Scale: 3"=1'-0"

A DESIGN STUDIO

MAIN CONTACT
Gracia Mueller
360.929.3077

CREATIVE
Brody Lund
425.359.7380

Additional information:
adesignstudioseattle.com

Follow us on social:
@adesignstudioseattle

COPYRIGHT
All artwork contained herein is the copyrighted property of A Design Studio Seattle. This includes, but is not limited to, logos, specifications, artwork and engineering. Any usage beyond internal reviews shall require our appoval and a separate design fee paid to A Design Studio Seattle. Usage rights can also be purchased (limited or complete) for an additional fee. Any unlawful distribution of said artwork is a violation of federal copyright laws.

PROJECT NAME
Terrace Station

PROJECT #
20-004

ADDRESS
24015 Van Ry Blvd
Mountlake Terrace, WA 98043

DATE
12/10/20

VERSION NOTES

V1
V2
V3
V4
V5
V6
V7
V8
V9
V10
V11
V12
V13
V14
V15

PAGE SCALE
1/4" = 1'-0"

PAGE #
134

B2-S41.1 - ELEVATIONS

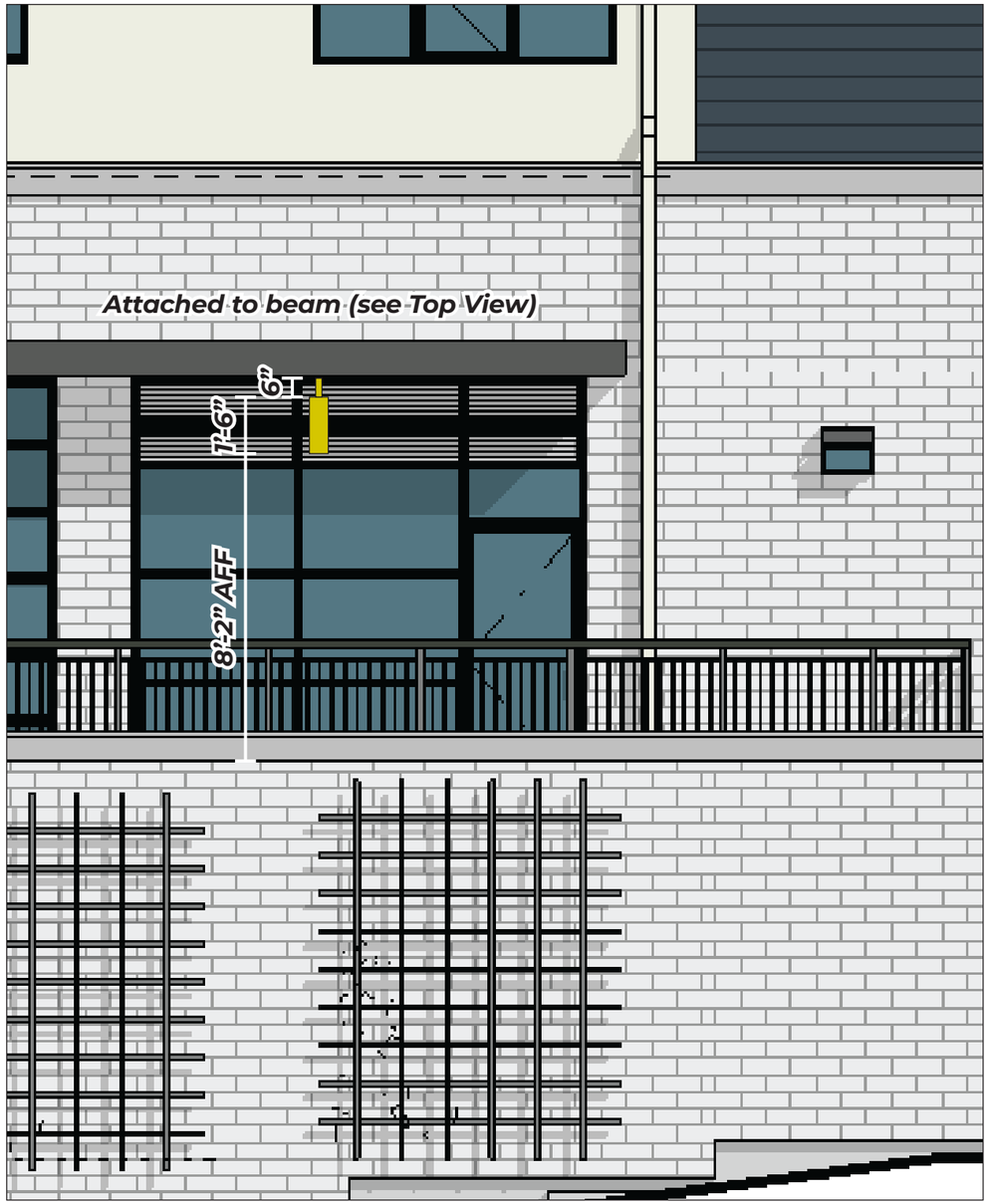

B2 South Elevation

Scale: 1/4" = 1'-0"

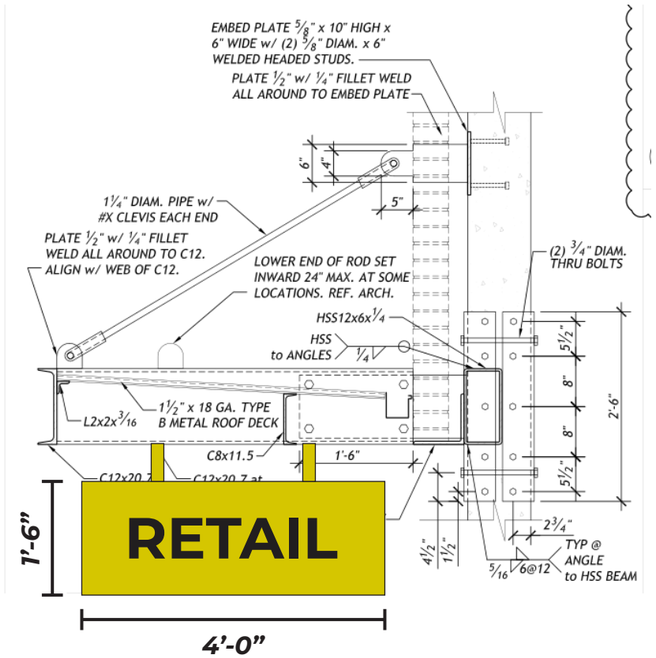

END VIEW

Scale: 1/2" = 1'-0"

A DESIGN STUDIO

MAIN CONTACT
Gracia Mueller
360.929.3077

CREATIVE
Brody Lund
425.359.7380

Additional information:
adesignstudioseattle.com

Follow us on social:
@adesignstudioseattle

COPYRIGHT
All artwork contained herein is the copyrighted property of A Design Studio Seattle. This includes, but is not limited to, logos, specifications, artwork and engineering. Any usage beyond internal reviews shall require our appoval and a separate design fee paid to A Design Studio Seattle. Usage rights can also be purchased (limited or complete) for an additional fee. Any unlawful distribution of said artwork is a violation of federal copyright laws.

PROJECT NAME
Terrace Station

PROJECT #
20-004

ADDRESS
24015 Van Ry Blvd
Mountlake Terrace, WA 98043

DATE
12/10/20

VERSION NOTES

- V1
- V2
- V3
- V4
- V5
- V6
- V7
- V8
- V9
- V10
- V11
- V12
- V13
- V14
- V15

PAGE SCALE
1/4" = 1'-0"

PAGE #
134.1

B2-S41.1 - DETAILS

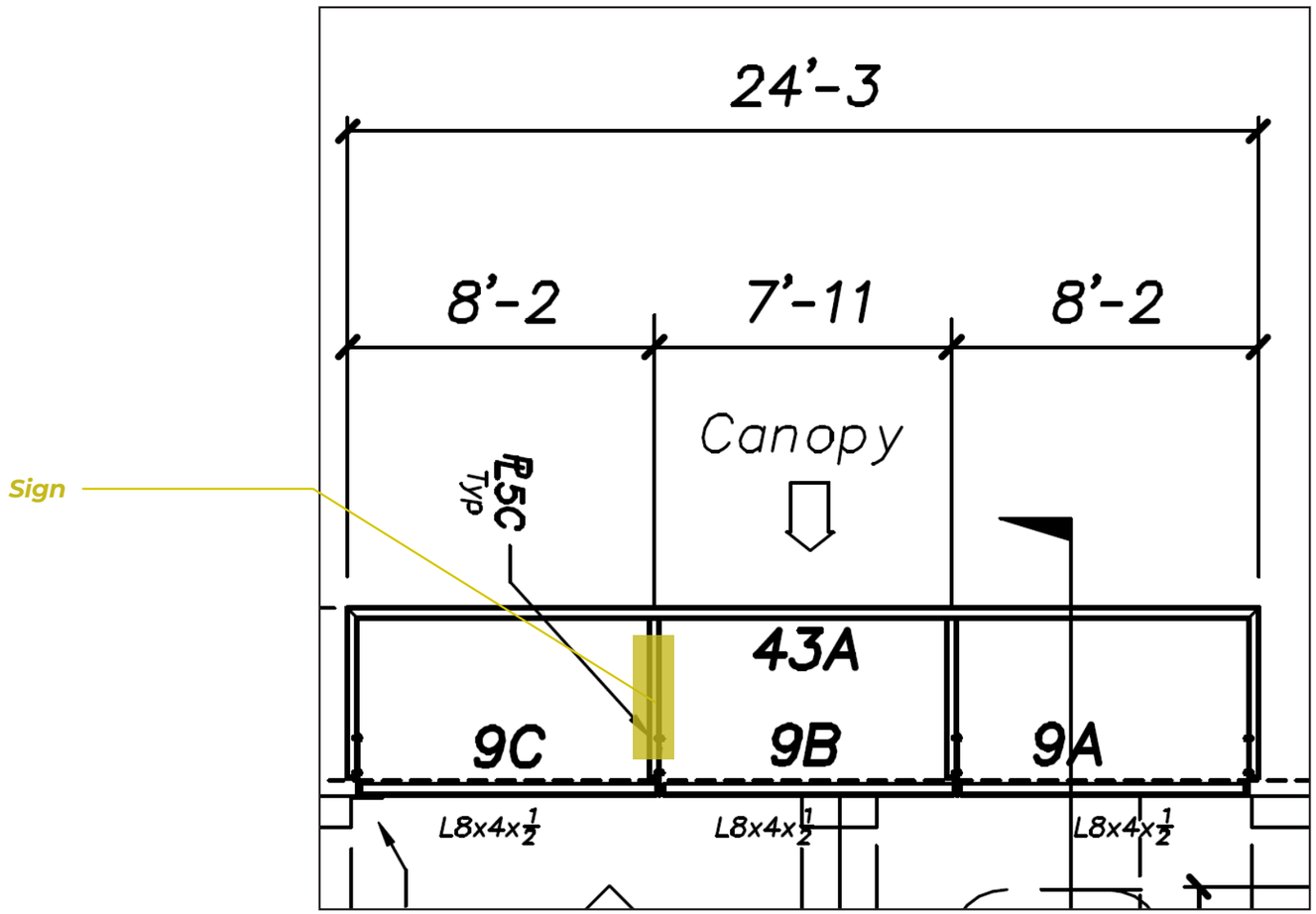

TOP VIEW
Scale: 1/4" = 1'-0"

A DESIGN STUDIO

MAIN CONTACT
Gracia Mueller
360.929.3077

CREATIVE
Brody Lund
425.359.7380

Additional information:
adesignstudioseattle.com

Follow us on social:
@adesignstudioseattle

COPYRIGHT
All artwork contained herein is the copyrighted property of A Design Studio Seattle. This includes, but is not limited to, logos, specifications, artwork and engineering. Any usage beyond internal reviews shall require our appoval and a separate design fee paid to A Design Studio Seattle. Usage rights can also be purchased (limited or complete) for an additional fee. Any unlawful distribution of said artwork is a violation of federal copyright laws.

PROJECT NAME
Terrace Station

PROJECT #
20-004

ADDRESS
24015 Van Ry Blvd
Mountlake Terrace, WA 98043

DATE
12/10/20

VERSION NOTES

V1
V2
V3
V4
V5
V6
V7
V8
V9
V10
V11
V12
V13
V14
V15

PAGE SCALE
1/4" = 1'-0"

PAGE #
134.2

B2-S41.2 - ELEVATION

B2 West Elevation

A DESIGN STUDIO

MAIN CONTACT
Gracia Mueller
360.929.3077

CREATIVE
Brody Lund
425.359.7380

Additional information:
adesignstudioseattle.com

Follow us on social:
@adesignstudioseattle

COPYRIGHT
All artwork contained herein is the copyrighted property of A Design Studio Seattle. This includes, but is not limited to, logos, specifications, artwork and engineering. Any usage beyond internal reviews shall require our appoval and a separate design fee paid to A Design Studio Seattle. Usage rights can also be purchased (limited or complete) for an additional fee. Any unlawful distribution of said artwork is a violation of federal copyright laws.

PROJECT NAME
Terrace Station

PROJECT #
20-004

ADDRESS
24015 Van Ry Blvd
Mountlake Terrace, WA 98043

DATE
12/10/20

VERSION NOTES

V1
V2
V3
V4
V5
V6
V7
V8
V9
V10
V11
V12
V13
V14
V15

PAGE SCALE
1/4" = 1'-0"

PAGE #
134.2

B2-S41.2 - ELEVATION

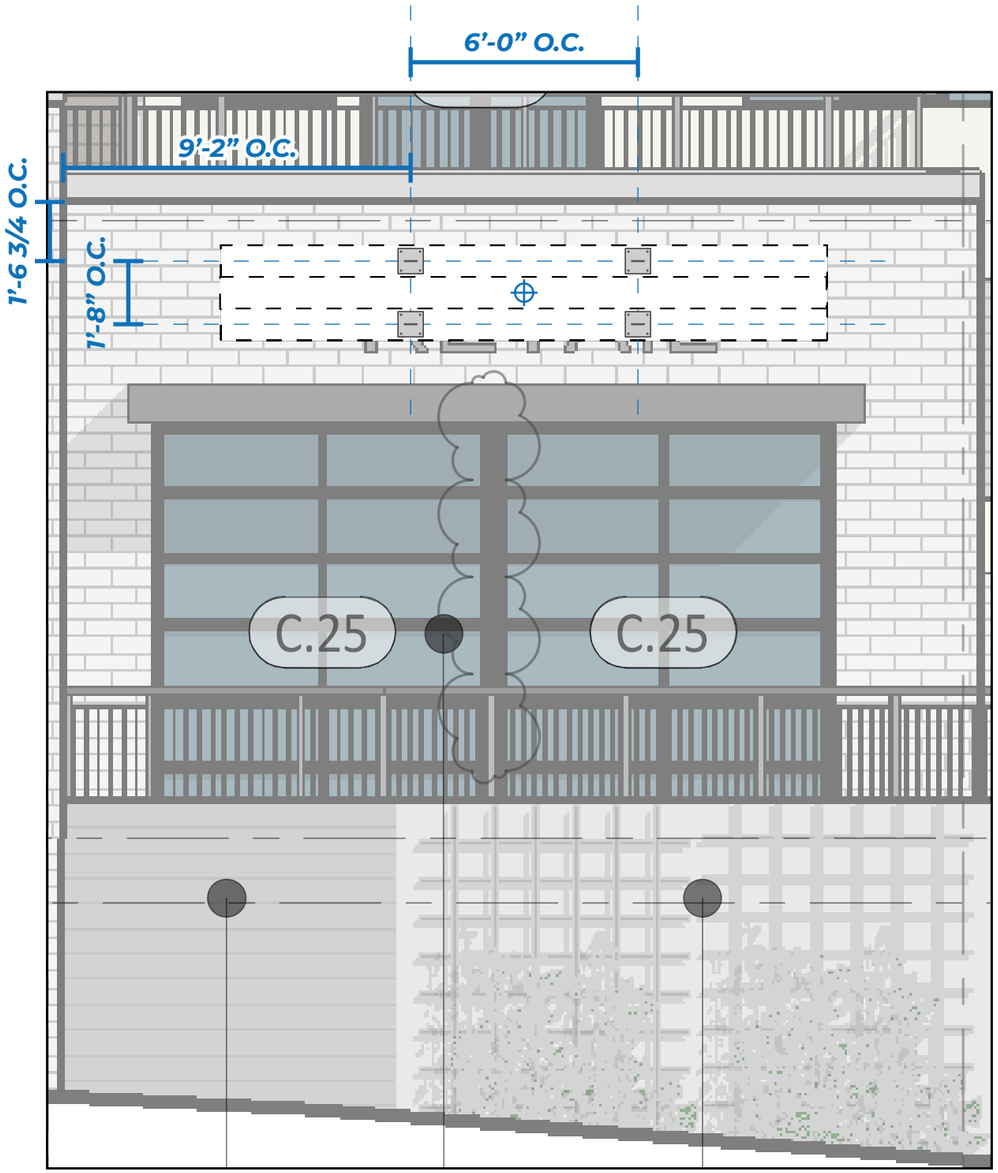

B2 West Elevation
Scale: 1/4" = 1'-0"

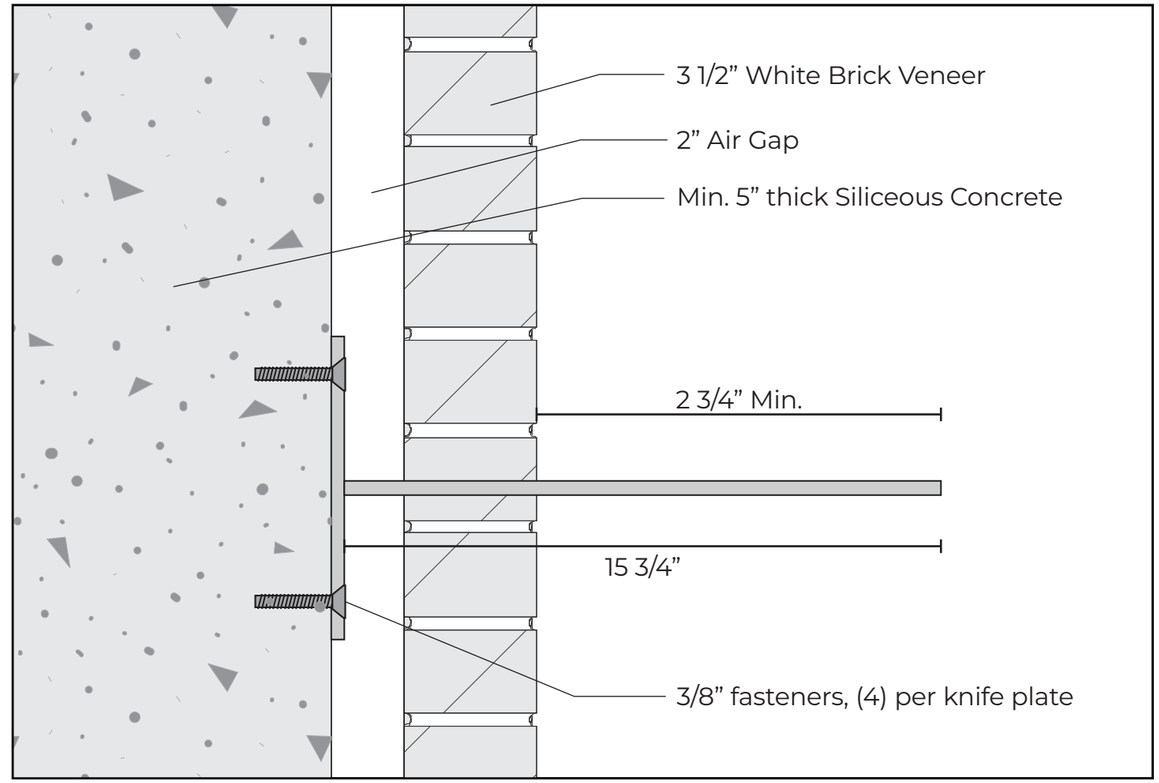

Knife Plate Install Detail
Scale: 3"=1'-0"

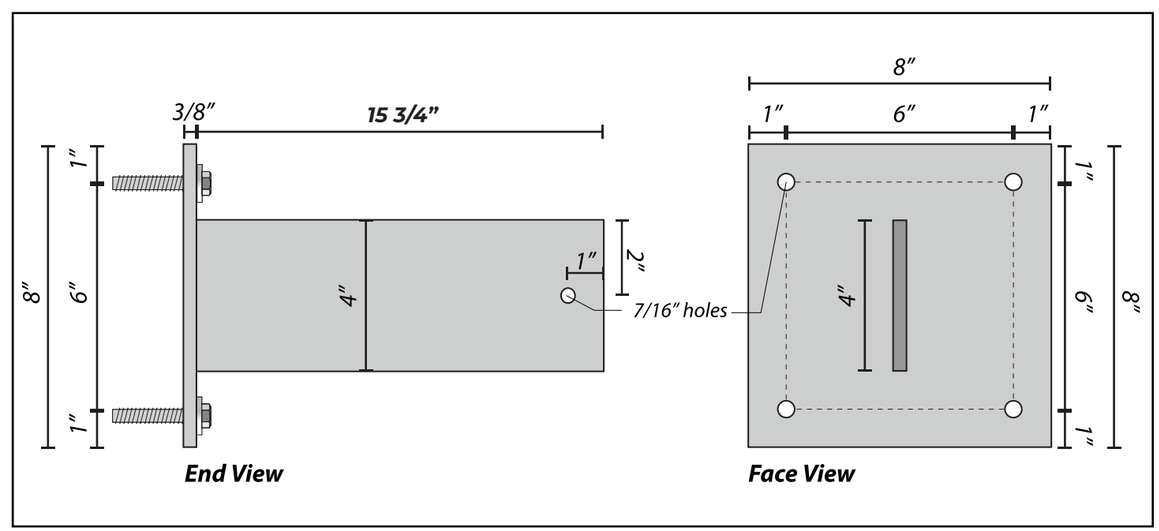

3/8" x 8" x 8" Steel Plate Detail
Scale: 3"=1'-0"

A DESIGN STUDIO

MAIN CONTACT
Gracia Mueller
360.929.3077

CREATIVE
Brody Lund
425.359.7380

Additional information:
adesignstudioseattle.com

Follow us on social:
@adesignstudioseattle

COPYRIGHT
All artwork contained herein is the copyrighted property of A Design Studio Seattle. This includes, but is not limited to, logos, specifications, artwork and engineering. Any usage beyond internal reviews shall require our appoval and a separate design fee paid to A Design Studio Seattle. Usage rights can also be purchased (limited or complete) for an additional fee. Any unlawful distribution of said artwork is a violation of federal copyright laws.

PROJECT NAME
Terrace Station

PROJECT #
20-004

ADDRESS
24015 Van Ry Blvd
Mountlake Terrace, WA 98043

DATE
12/10/20

VERSION NOTES

V1
V2
V3
V4
V5
V6
V7
V8
V9
V10
V11
V12
V13
V14
V15

PAGE SCALE
1/4" = 1'-0"

PAGE #
134.3

BUILDING 3

A DESIGN STUDIO

MAIN CONTACT
Gracia Mueller
360.929.3077

CREATIVE
Brody Lund
425.359.7380

Additional information:
adesignstudioseattle.com

Follow us on social:
@adesignstudioseattle

COPYRIGHT
All artwork contained herein is the copyrighted property of A Design Studio Seattle. This includes, but is not limited to, logos, specifications, artwork and engineering. Any usage beyond internal reviews shall require our appoval and a separate design fee paid to A Design Studio Seattle. Usage rights can also be purchased (limited or complete) for an additional fee. Any unlawful distribution of said artwork is a violation of federal copyright laws.

PROJECT NAME
Terrace Station

PROJECT #
20-004

ADDRESS
24015 Van Ry Blvd
Mountlake Terrace, WA 98043

DATE
12/10/20

VERSION NOTES

V1
V2
V3
V4
V5
V6
V7
V8
V9
V10
V11
V12
V13
V14
V15

PAGE SCALE
N/A

PAGE #

SITE PLANS - B3

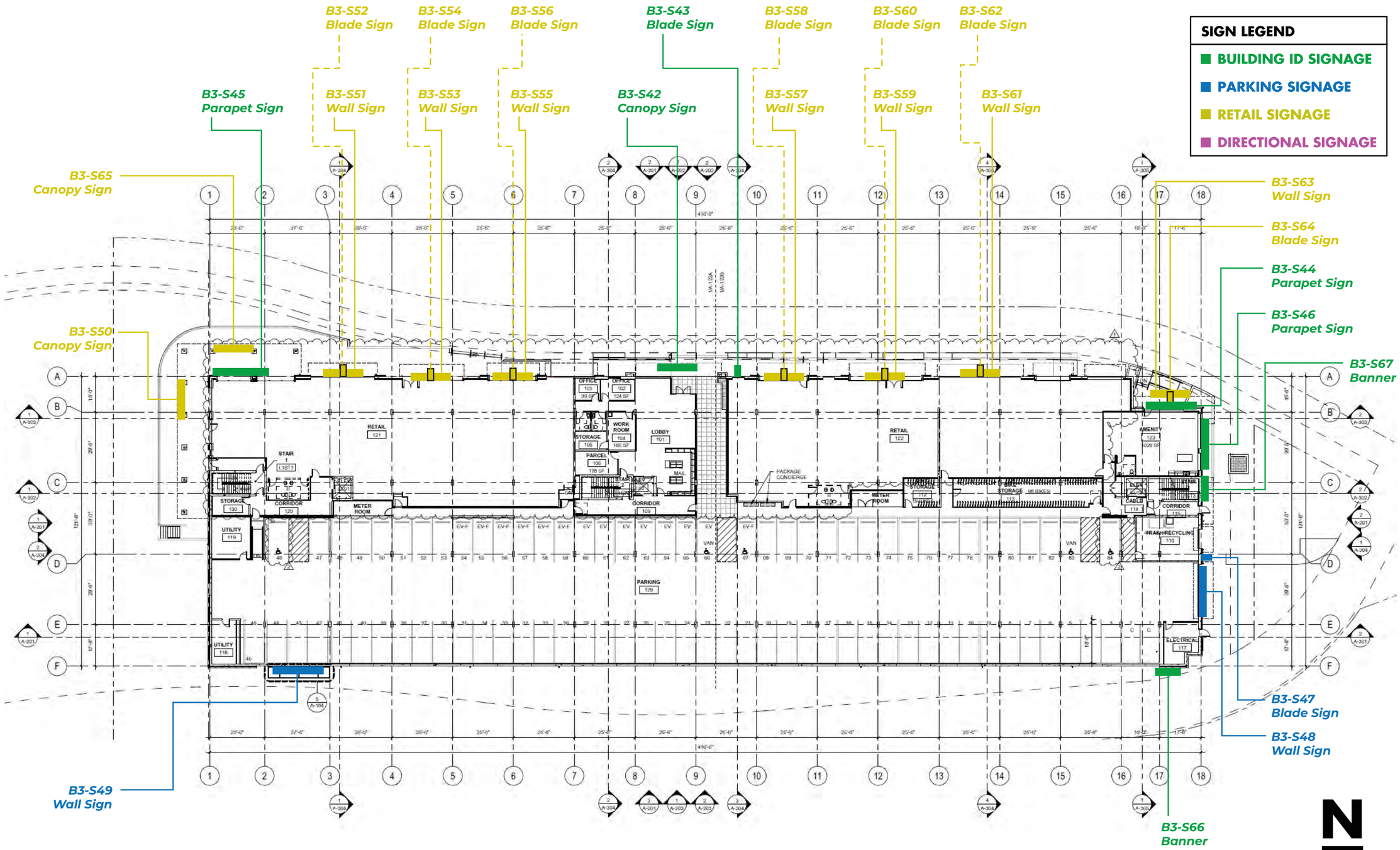

A DESIGN STUDIO

MAIN CONTACT
Gracia Mueller
360.929.3077

CREATIVE
Brody Lund
425.359.7380

Additional information:
adesignstudioseattle.com

Follow us on social:
@adesignstudioseattle

COPYRIGHT
All artwork contained herein is the copyrighted property of A Design Studio Seattle. This includes, but is not limited to, logos, specifications, artwork and engineering. Any usage beyond internal reviews shall require our appoval and a separate design fee paid to A Design Studio Seattle. Usage rights can also be purchased (limited or complete) for an additional fee. Any unlawful distribution of said artwork is a violation of federal copyright laws.

PROJECT NAME
Terrace Station

PROJECT #
20-004

ADDRESS
24015 Van Ry Blvd
Mountlake Terrace, WA 98043

DATE
12/10/20

VERSION NOTES

V1
V2
V3
V4
V5
V6
V7
V8
V9
V10
V11
V12
V13
V14
V15

PAGE SCALE
1" = 40'-0"

PAGE #

B3 - ELEVATIONS

COLOR KEY

- BUILDING ID SIGNAGE
- RETAIL SIGNAGE
- PARKING SIGNAGE

West Elevation

A DESIGN STUDIO

MAIN CONTACT
Gracia Mueller
360.929.3077

CREATIVE
Brody Lund
425.359.7380

Additional information:
adesignstudioseattle.com

Follow us on social:
@adesignstudioseattle

COPYRIGHT
All artwork contained herein is the copyrighted property of A Design Studio Seattle. This includes, but is not limited to, logos, specifications, artwork and engineering. Any usage beyond internal reviews shall require our appoval and a separate design fee paid to A Design Studio Seattle. Usage rights can also be purchased (limited or complete) for an additional fee. Any unlawful distribution of said artwork is a violation of federal copyright laws.

PROJECT NAME
Terrace Station

PROJECT #
20-004

ADDRESS
24015 Van Ry Blvd
Mountlake Terrace, WA 98043

DATE
12/10/20

VERSION NOTES

V1
V2
V3
V4
V5
V6
V7
V8
V9
V10
V11
V12
V13
V14
V15

PAGE SCALE
1" = 30'-0"

PAGE #

B3 - ELEVATIONS

COLOR KEY

- BUILDING ID SIGNAGE
- RETAIL SIGNAGE
- PARKING SIGNAGE

East Elevation

A DESIGN STUDIO

MAIN CONTACT
Gracia Mueller
360.929.3077

CREATIVE
Brody Lund
425.359.7380

Additional information:
adesignstudioseattle.com

Follow us on social:
@adesignstudioseattle

COPYRIGHT
All artwork contained herein is the copyrighted property of A Design Studio Seattle. This includes, but is not limited to, logos, specifications, artwork and engineering. Any usage beyond internal reviews shall require our appoval and a separate design fee paid to A Design Studio Seattle. Usage rights can also be purchased (limited or complete) for an additional fee. Any unlawful distribution of said artwork is a violation of federal copyright laws.

PROJECT NAME
Terrace Station

PROJECT #
20-004

ADDRESS
24015 Van Ry Blvd
Mountlake Terrace, WA 98043

DATE
12/10/20

VERSION NOTES

V1
V2
V3
V4
V5
V6
V7
V8
V9
V10
V11
V12
V13
V14
V15

PAGE SCALE
1" = 30'-0"

B3 - ELEVATIONS

COLOR KEY

- **BUILDING ID SIGNAGE**
- **RETAIL SIGNAGE**
- **PARKING SIGNAGE**

North Elevation

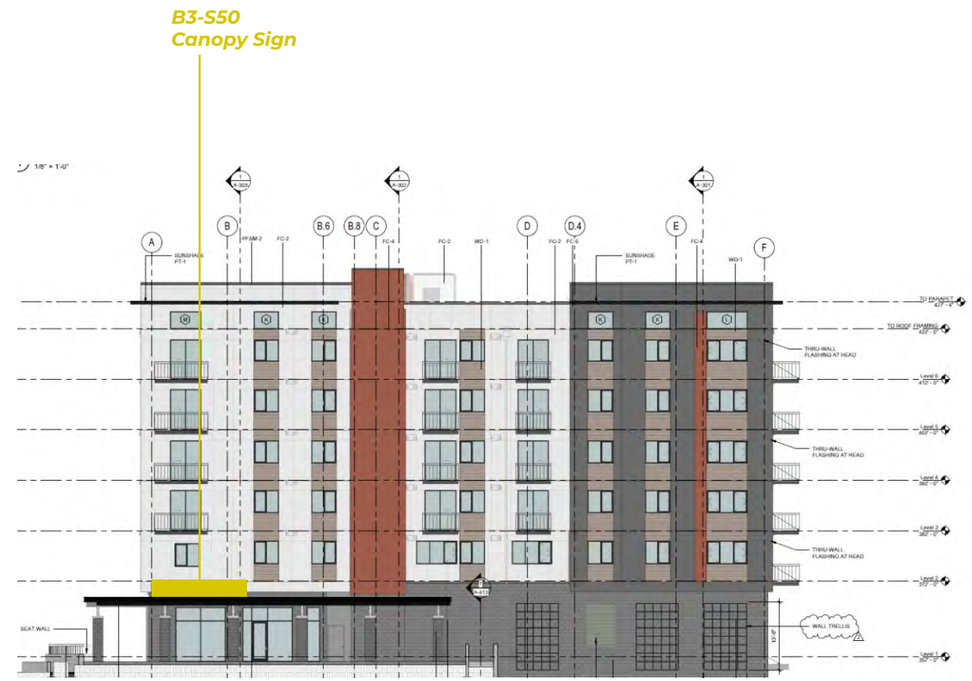

South Elevation

A DESIGN STUDIO

MAIN CONTACT
Gracia Mueller
360.929.3077

CREATIVE
Brody Lund
425.359.7380

Additional information:
adesignstudioseattle.com

Follow us on social:
@adesignstudioseattle

COPYRIGHT
All artwork contained herein is the copyrighted property of A Design Studio Seattle. This includes, but is not limited to, logos, specifications, artwork and engineering. Any usage beyond internal reviews shall require our appoval and a separate design fee paid to A Design Studio Seattle. Usage rights can also be purchased (limited or complete) for an additional fee. Any unlawful distribution of said artwork is a violation of federal copyright laws.

PROJECT NAME
Terrace Station

PROJECT #
20-004

ADDRESS
24015 Van Ry Blvd
Mountlake Terrace, WA 98043

DATE
12/10/20

VERSION NOTES

V1
V2
V3
V4
V5
V6
V7
V8
V9
V10
V11
V12
V13
V14
V15

PAGE SCALE
1" = 30'-0"

PAGE #

B3 - SIGN SCHEDULE

SIGN #	DESCRIPTION	
B3-S42	S/F ILLUMINATED CANOPY SIGN ▪ QTY (1) 20'-6" W x 2'-0" H ▪ SIGN AREA: 26.3 SQ FT	PAGE 141-143
B3-S43	D/F ILLUMINATED BLADE SIGN ▪ QTY (1) 3'-7" W x 1'-4" H ▪ SIGN AREA: 4.8 SQ FT	PAGE 144-146
B3-S44	S/F ILLUMINATED PARAPET SIGN ▪ QTY (1) 20'-6" W x 2'-0" H ▪ SIGN AREA: 26.3 SQ FT	PAGE 147, 150-151
B3-S45	S/F ILLUMINATED PARAPET SIGN ▪ QTY (1) 20'-6" W x 2'-0" H ▪ SIGN AREA: 26.3 SQ FT	PAGE 148, 150-151
B3-S46	S/F ILLUMINATED PARAPET SIGN ▪ QTY (1) 20'-6" W x 2'-0" H ▪ SIGN AREA: 26.3 SQ FT	PAGE 149-151
B3-S47	D/F ILLUMINATED BLADE SIGN ▪ QTY (1) 2'-8" W x 2'-0" H ▪ SIGN AREA: 5.3 SQ FT	PAGE 152-154
B3-S48	S/F ILLUMINATED WALL SIGN ▪ QTY (1) 24'-0" W x 1'-0" H ▪ SIGN AREA: 24 SQ FT	PAGE 155-156
B3-S49	S/F ILLUMINATED WALL SIGN ▪ QTY (1) 17'-0" W x 3'-0" H ▪ SIGN AREA: 26 SQ FT	PAGE 157-158
B3-S50	S/F ILLUMINATED CANOPY SIGN ▪ QTY (1) 16'-0 W x 2'-6" H ▪ SIGN AREA: 40 SQ FT	PAGE 159-160
B3-S51	S/F ILLUMINATED WALL SIGN ▪ QTY (1) 16'-0 W x 2'-6" H ▪ SIGN AREA: 40 SQ FT	PAGE 161-162
B3-S52	D/F ILLUMINATED BLADE SIGN ▪ QTY (1) 4'-0" W x 1'-6" H ▪ SIGN AREA: 6 SQ FT	PAGE 163-164
B3-S53	S/F ILLUMINATED WALL SIGN ▪ QTY (1) 16'-0 W x 2'-6" H ▪ SIGN AREA: 40 SQ FT	PAGE 165-166
B3-S54	D/F ILLUMINATED BLADE SIGN ▪ QTY (1) 4'-0" W x 1'-6" H ▪ SIGN AREA: 6 SQ FT	PAGE 167-168
B3-S55	S/F ILLUMINATED WALL SIGN ▪ QTY (1) 16'-0 W x 2'-6" H ▪ SIGN AREA: 40 SQ FT	PAGE 169-170
B3-S56	D/F ILLUMINATED BLADE SIGN ▪ QTY (1) 4'-0" W x 1'-6" H ▪ SIGN AREA: 6 SQ FT	PAGE 171-172

SIGN #	DESCRIPTION	
B3-S57	S/F ILLUMINATED WALL SIGN ▪ QTY (1) 16'-0 W x 2'-6" H ▪ SIGN AREA: 40 SQ FT	PAGE 173-174
B3-S58	D/F ILLUMINATED BLADE SIGN ▪ QTY (1) 4'-0" W x 1'-6" H ▪ SIGN AREA: 6 SQ FT	PAGE 175-176
B3-S59	S/F ILLUMINATED WALL SIGN ▪ QTY (1) 16'-0 W x 2'-6" H ▪ SIGN AREA: 40 SQ FT	PAGE 177-178
B3-S60	D/F ILLUMINATED BLADE SIGN ▪ QTY (1) 4'-0" W x 1'-6" H ▪ SIGN AREA: 6 SQ FT	PAGE 179-180
B3-S61	S/F ILLUMINATED WALL SIGN ▪ QTY (1) 16'-0 W x 2'-6" H ▪ SIGN AREA: 40 SQ FT	PAGE 181-182
B3-S62	D/F ILLUMINATED BLADE SIGN ▪ QTY (1) 4'-0" W x 1'-6" H ▪ SIGN AREA: 6 SQ FT	PAGE 183-184
B3-S63	S/F ILLUMINATED WALL SIGN ▪ QTY (1) 16'-0 W x 2'-6" H ▪ SIGN AREA: 40 SQ FT	PAGE 185-186
B3-S64	D/F ILLUMINATED BLADE SIGN ▪ QTY (1) 4'-0" W x 1'-6" H ▪ SIGN AREA: 6 SQ FT	PAGE 187-188
B3-S65	S/F ILLUMINATED CANOPY SIGN ▪ QTY (1) 16'-0 W x 2'-6" H ▪ SIGN AREA: 40 SQ FT	PAGE 189-190
B3-S66	S/F NON-ILLUMINATED BANNER ▪ QTY (1) 4'-4" W x 26'-7" H ▪ SIGN AREA: 115.2 SQ FT	PAGE 191, 193
B3-S67	S/F NON-ILLUMINATED BANNER ▪ QTY (1) 4'-4" W x 26'-7" H ▪ SIGN AREA: 115.2 SQ FT	PAGE 192-193

A DESIGN STUDIO

MAIN CONTACT
Gracia Mueller
360.929.3077

CREATIVE
Brody Lund
425.359.7380

Additional information:
adesignstudioseattle.com

Follow us on social:
@adesignstudioseattle

COPYRIGHT
All artwork contained herein is the copyrighted property of A Design Studio Seattle. This includes, but is not limited to, logos, specifications, artwork and engineering. Any usage beyond internal reviews shall require our appoval and a separate design fee paid to A Design Studio Seattle. Usage rights can also be purchased (limited or complete) for an additional fee. Any unlawful distribution of said artwork is a violation of federal copyright laws.

PROJECT NAME
Terrace Station

PROJECT #
20-004

ADDRESS
24015 Van Ry Blvd
Mountlake Terrace, WA 98043

DATE
12/10/20

VERSION NOTES

V1
V2
V3
V4
V5
V6
V7
V8
V9
V10
V11
V12
V13
V14
V15

PAGE SCALE
N/A

PAGE #
140

B3-S42 - ELEVATION

B3 West Elevation

A DESIGN STUDIO

MAIN CONTACT
Gracia Mueller
360.929.3077

CREATIVE
Brody Lund
425.359.7380

Additional information:
adesignstudioseattle.com

Follow us on social:
@adesignstudioseattle

COPYRIGHT
All artwork contained herein is the copyrighted property of A Design Studio Seattle. This includes, but is not limited to, logos, specifications, artwork and engineering. Any usage beyond internal reviews shall require our appoval and a separate design fee paid to A Design Studio Seattle. Usage rights can also be purchased (limited or complete) for an additional fee. Any unlawful distribution of said artwork is a violation of federal copyright laws.

PROJECT NAME
Terrace Station

PROJECT #
20-004

ADDRESS
23905 Van Ry Blvd
Mountlake Terrace, WA 98043

DATE
12/10/20

VERSION NOTES

V1
V2
V3
V4
V5
V6
V7
V8
V9
V10
V11
V12
V13
V14
V15

PAGE SCALE
1/4" = 1'-0"

PAGE #

B3-S42 - DETAILS

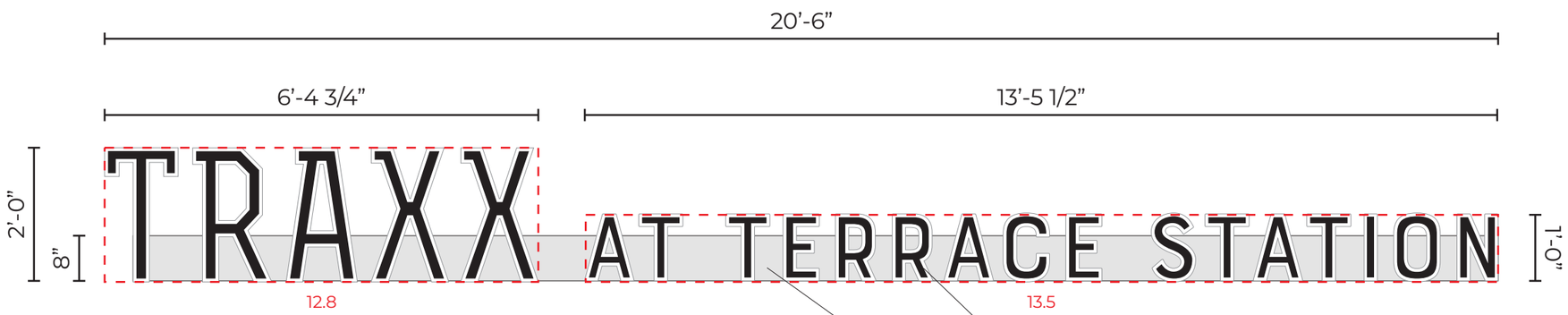

FACE VIEW

END VIEW

Faux neon acrylic letters, with perimeter illuminated white, with black vinyl inset faces.

8” x 8” alum. raceway, painted TBD, mounted to top of canopy.

Sign B3-S42: Manufacture & install (1) single face illuminated canopy sign with faux neon acrylic.

Sign Area: 26.3 Square Feet

A DESIGN STUDIO

MAIN CONTACT
Gracia Mueller
360.929.3077

CREATIVE
Brody Lund
425.359.7380

Additional information:
adesignstudioseattle.com

Follow us on social:
@adesignstudioseattle

COPYRIGHT
All artwork contained herein is the copyrighted property of A Design Studio Seattle. This includes, but is not limited to, logos, specifications, artwork and engineering. Any usage beyond internal reviews shall require our appoval and a separate design fee paid to A Design Studio Seattle. Usage rights can also be purchased (limited or complete) for an additional fee. Any unlawful distribution of said artwork is a violation of federal copyright laws.

PROJECT NAME
Terrace Station

PROJECT #
20-004

ADDRESS
23905 Van Ry Blvd
Mountlake Terrace, WA 98043

DATE
12/10/20

VERSION NOTES

V1
V2
V3
V4
V5
V6
V7
V8
V9
V10
V11
V12
V13
V14
V15

PAGE SCALE
1/2” = 1’-0”

PAGE #
142

B3-S42 - ATTACHMENT DETAILS

FINAL ATTACHMENT TBD
CANOPY DETAILS REQUIRED

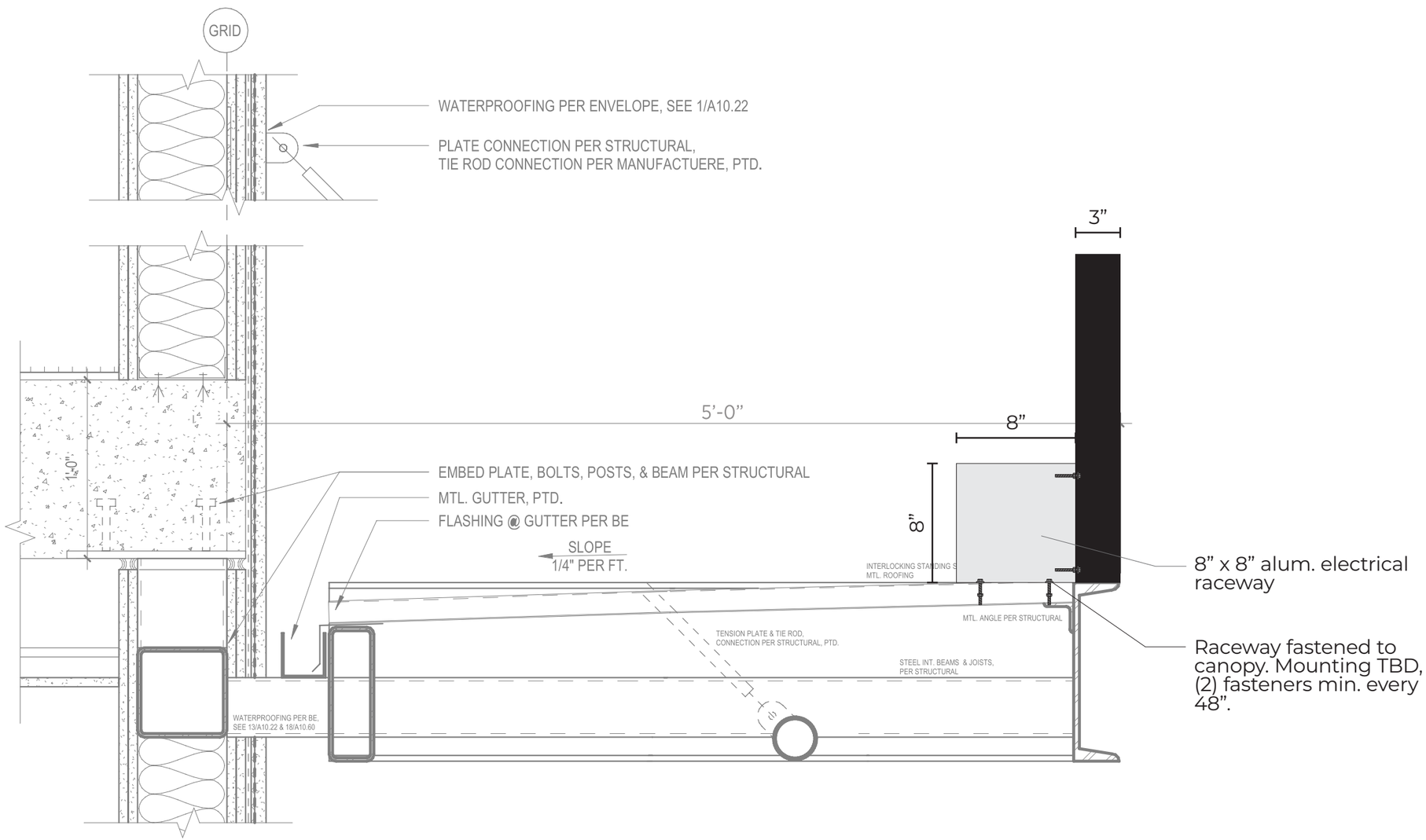

CANOPY (TIE ROD)

1 1/2" = 1'-0"

A DESIGN STUDIO

MAIN CONTACT
Gracia Mueller
360.929.3077

CREATIVE
Brody Lund
425.359.7380

Additional information:
adesignstudioseattle.com

Follow us on social:
@adesignstudioseattle

COPYRIGHT
All artwork contained herein is the copyrighted property of A Design Studio Seattle. This includes, but is not limited to, logos, specifications, artwork and engineering. Any usage beyond internal reviews shall require our appoval and a separate design fee paid to A Design Studio Seattle. Usage rights can also be purchased (limited or complete) for an additional fee. Any unlawful distribution of said artwork is a violation of federal copyright laws.

PROJECT NAME
Terrace Station

PROJECT #
20-004

ADDRESS
23905 Van Ry Blvd
Mountlake Terrace, WA 98043

DATE
12/10/20

VERSION NOTES

V1
V2
V3
V4
V5
V6
V7
V8
V9
V10
V11
V12
V13
V14
V15

PAGE SCALE
1 1/2” = 1'-0”

PAGE #
143

B3-S43 - ELEVATION

B3 West Elevation

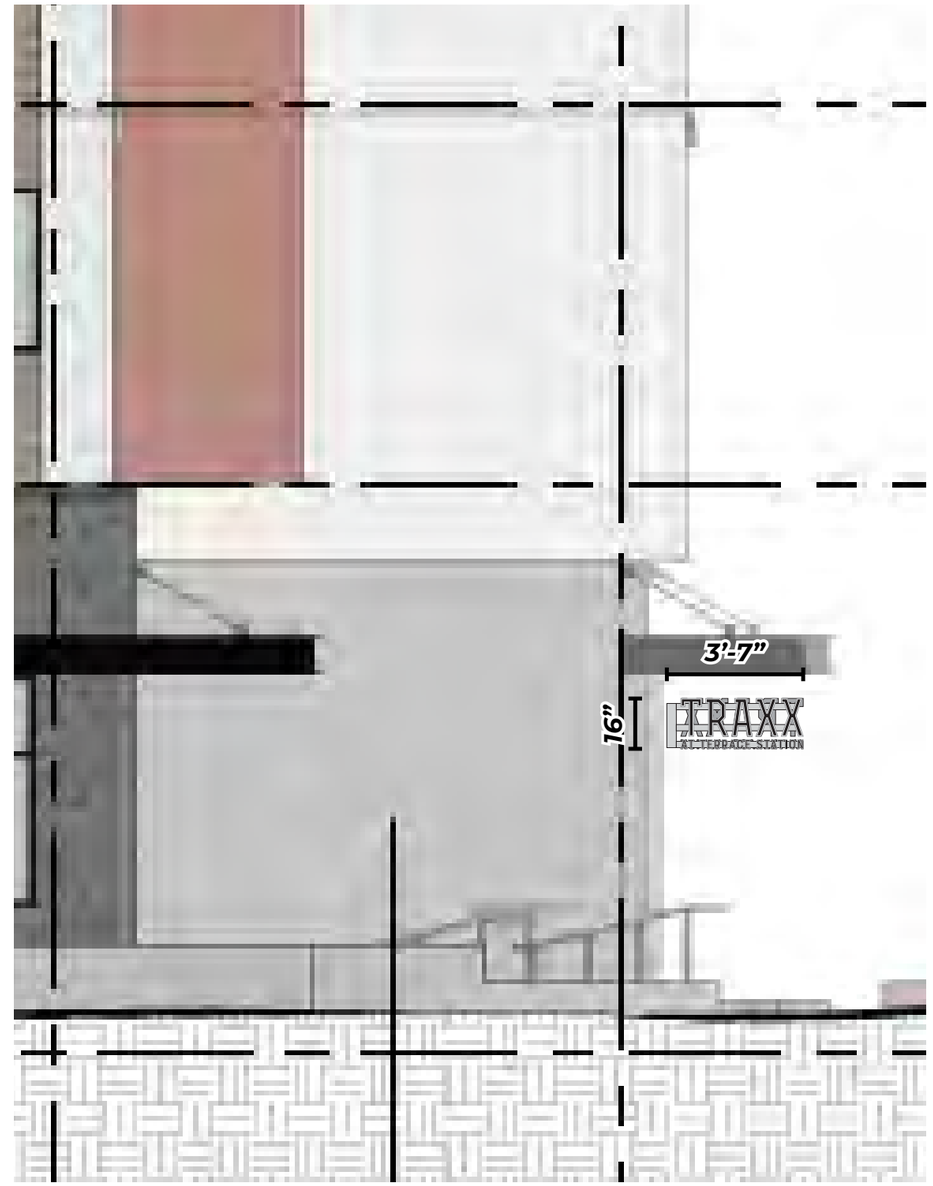

B3 North Elevation

A DESIGN STUDIO

MAIN CONTACT
Gracia Mueller
360.929.3077

CREATIVE
Brody Lund
425.359.7380

Additional information:
adesignstudioseattle.com

Follow us on social:
@adesignstudioseattle

COPYRIGHT
All artwork contained herein is the copyrighted property of A Design Studio Seattle. This includes, but is not limited to, logos, specifications, artwork and engineering. Any usage beyond internal reviews shall require our appoval and a separate design fee paid to A Design Studio Seattle. Usage rights can also be purchased (limited or complete) for an additional fee. Any unlawful distribution of said artwork is a violation of federal copyright laws.

PROJECT NAME
Terrace Station

PROJECT #
20-004

ADDRESS
23905 Van Ry Blvd
Mountlake Terrace, WA 98043

DATE
12/10/20

VERSION NOTES

V1
V2
V3
V4
V5
V6
V7
V8
V9
V10
V11
V12
V13
V14
V15

PAGE SCALE
1/4" = 1'-0"

PAGE #

B3-S43 - DETAIL

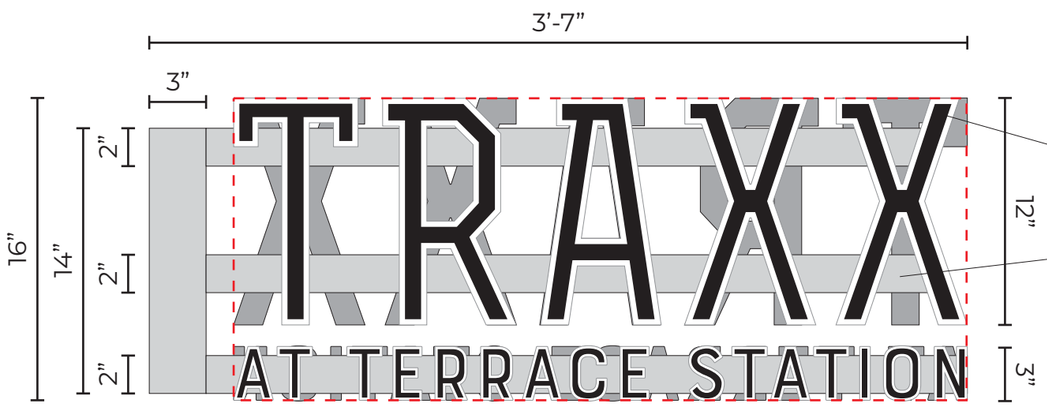

FACE VIEW

Faux neon acrylic letters, with perimeter illuminated white, with black vinyl inset faces, and black returns.

2" x 3" alum. rect tube structural supports.

3" x 5" alum. electrical power supply box with access panel.

END VIEW

Sign B3-S43: Manufacture & install (1) double face illuminated blade sign with faux neon acrylic.

Sign Area: 4.8 Square Feet

REVERSE SIDE

A DESIGN STUDIO

MAIN CONTACT
Gracia Mueller
360.929.3077

CREATIVE
Brody Lund
425.359.7380

Additional information:
adesignstudioseattle.com

Follow us on social:
@adesignstudioseattle

COPYRIGHT
All artwork contained herein is the copyrighted property of A Design Studio Seattle. This includes, but is not limited to, logos, specifications, artwork and engineering. Any usage beyond internal reviews shall require our appoval and a separate design fee paid to A Design Studio Seattle. Usage rights can also be purchased (limited or complete) for an additional fee. Any unlawful distribution of said artwork is a violation of federal copyright laws.

PROJECT NAME
Terrace Station

PROJECT #
20-004

ADDRESS
23905 Van Ry Blvd
Mountlake Terrace, WA 98043

DATE
12/10/20

VERSION NOTES

V1
V2
V3
V4
V5
V6
V7
V8
V9
V10
V11
V12
V13
V14
V15

PAGE SCALE
1 1/2" = 1'-0"

B3-S43 - ATTACHMENT DETAILS

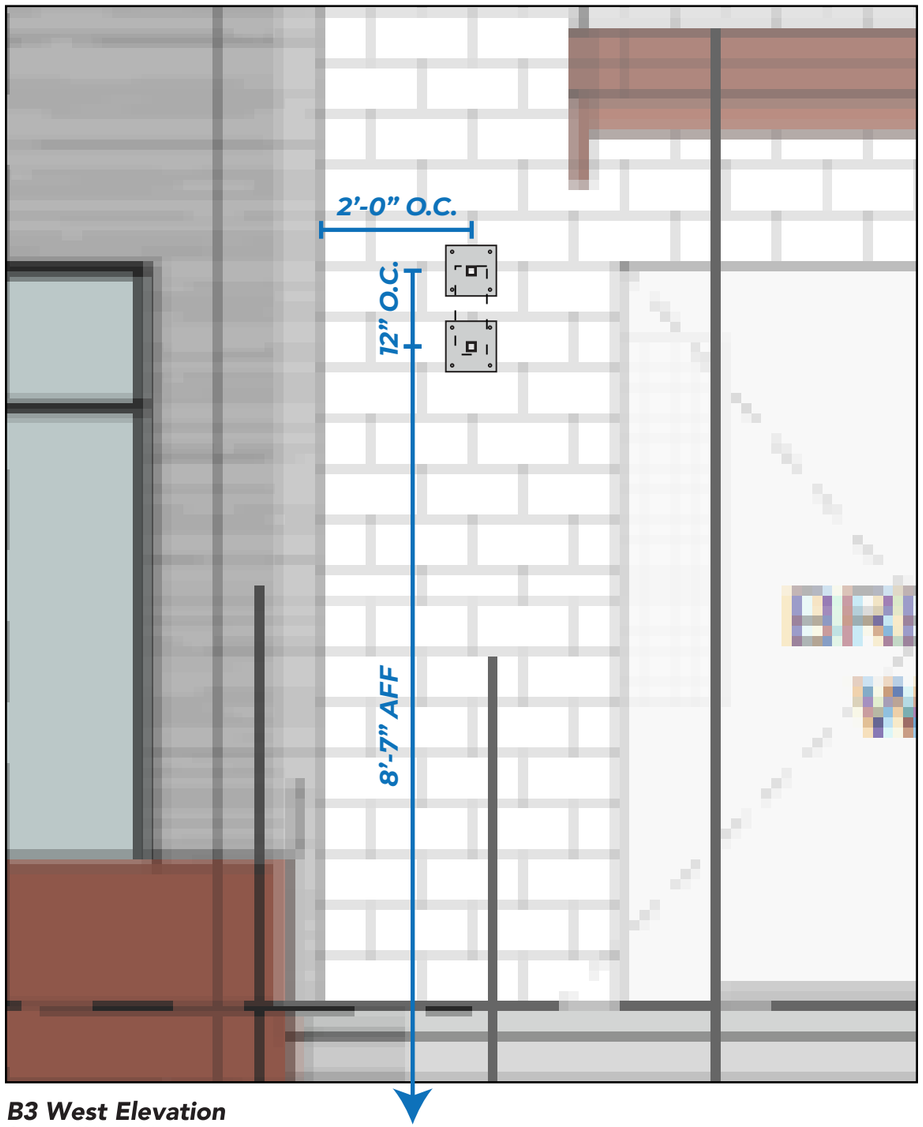

B3 West Elevation
Scale: 1/2"=1'-0"

Primary Electrical Location
Client to provide 20 Amp / 120 Volt dedicated circuit to sign location

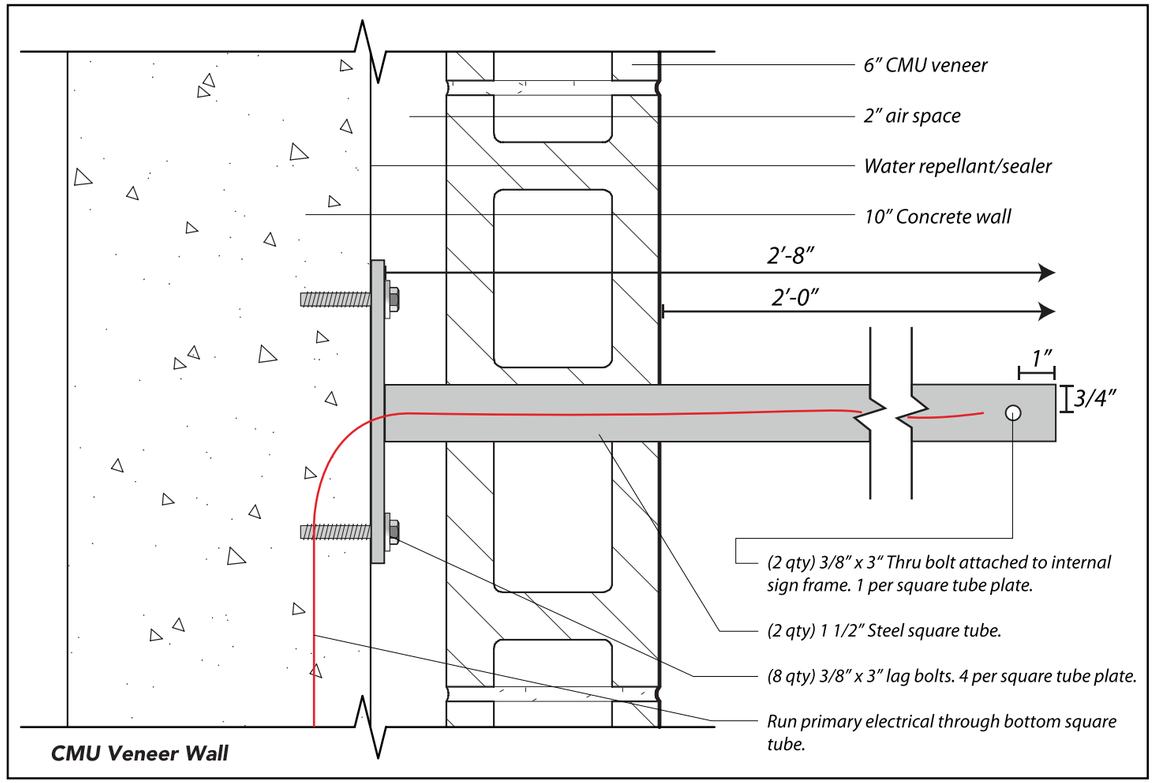

Knife Plate Install Detail
Scale: 3"=1'-0"

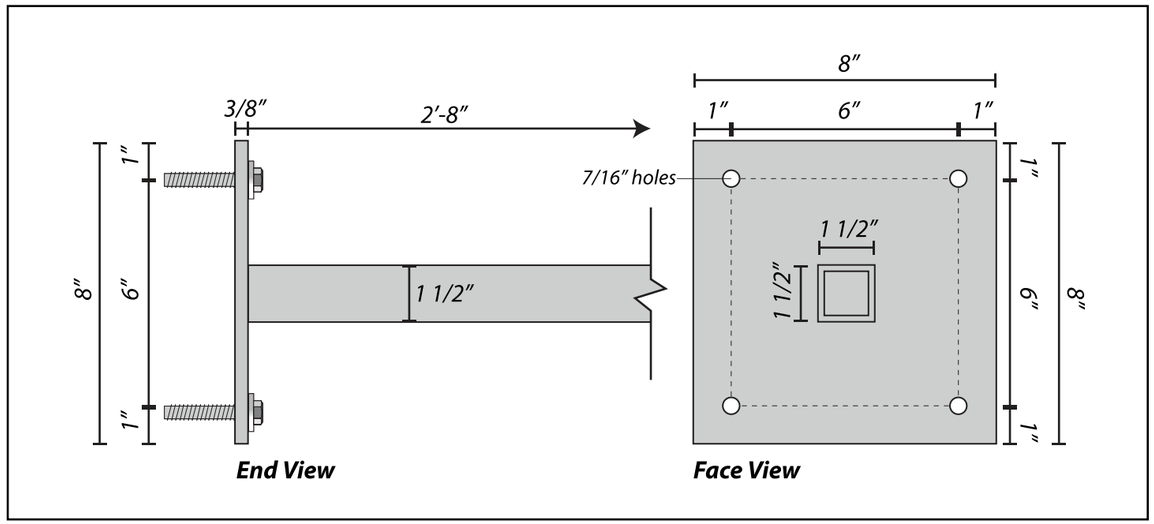

3/8" x 8" x 8" Steel Square Tube Plate Detail
Scale: 3"=1'-0"

A DESIGN STUDIO

MAIN CONTACT
Gracia Mueller
360.929.3077

CREATIVE
Brody Lund
425.359.7380

Additional information:
adesignstudioseattle.com

Follow us on social:
@adesignstudioseattle

COPYRIGHT
All artwork contained herein is the copyrighted property of A Design Studio Seattle. This includes, but is not limited to, logos, specifications, artwork and engineering. Any usage beyond internal reviews shall require our appoval and a separate design fee paid to A Design Studio Seattle. Usage rights can also be purchased (limited or complete) for an additional fee. Any unlawful distribution of said artwork is a violation of federal copyright laws.

PROJECT NAME
Terrace Station

PROJECT #
20-004

ADDRESS
23905 Van Ry Blvd
Mountlake Terrace, WA 98043

DATE
12/10/20

VERSION NOTES
V1
V2
V3
V4
V5
V6
V7
V8
V9
V10
V11
V12
V13
V14
V15

PAGE SCALE
1 1/2" = 1'-0"

PAGE #
146

B3-S44 - ELEVATION

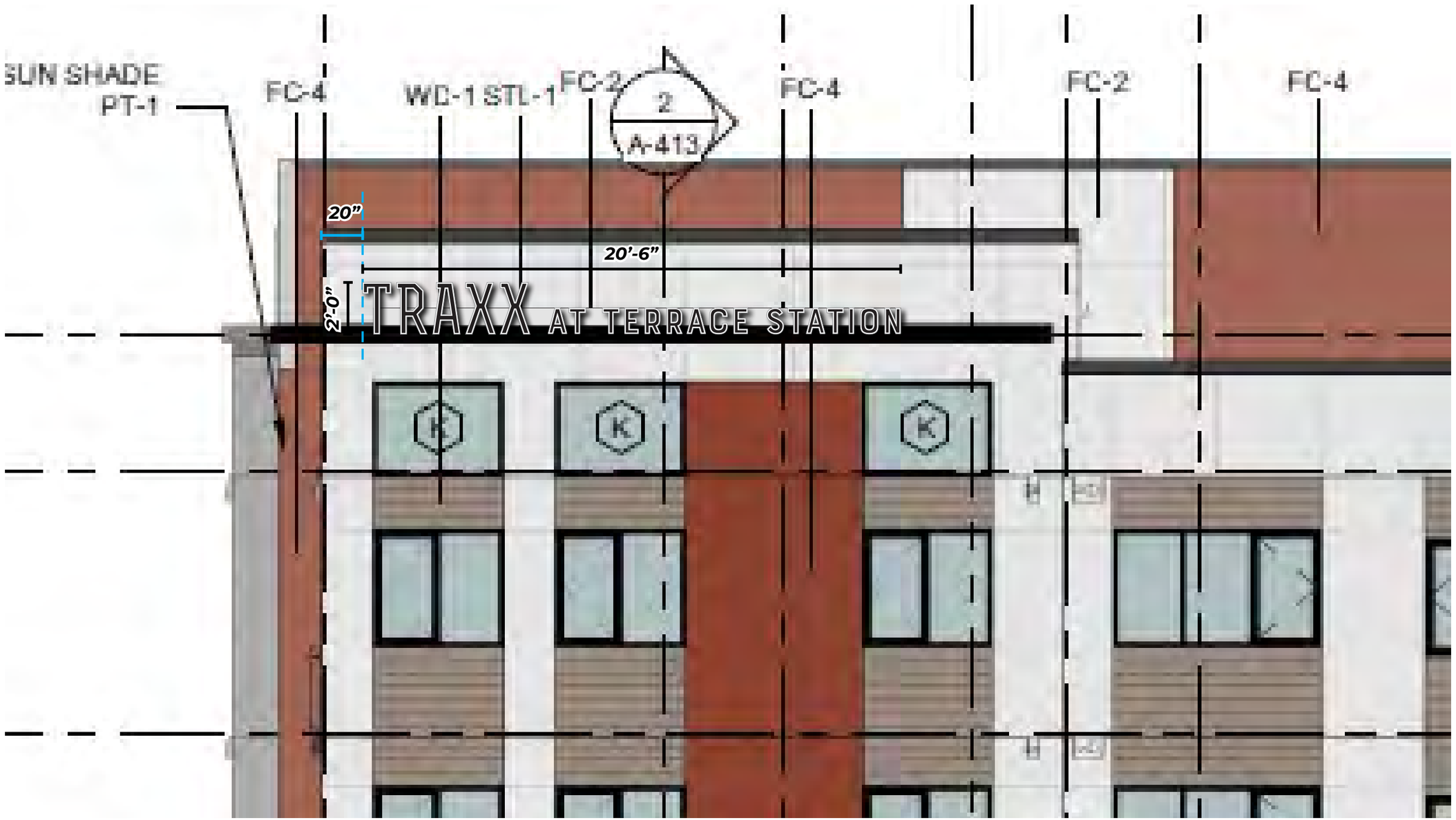

B3 West Elevation

A DESIGN STUDIO

MAIN CONTACT
Gracia Mueller
360.929.3077

CREATIVE
Brody Lund
425.359.7380

Additional information:
adesignstudioseattle.com

Follow us on social:
@adesignstudioseattle

COPYRIGHT
All artwork contained herein is the copyrighted property of A Design Studio Seattle. This includes, but is not limited to, logos, specifications, artwork and engineering. Any usage beyond internal reviews shall require our appoval and a separate design fee paid to A Design Studio Seattle. Usage rights can also be purchased (limited or complete) for an additional fee. Any unlawful distribution of said artwork is a violation of federal copyright laws.

PROJECT NAME
Terrace Station

PROJECT #
20-004

ADDRESS
23905 Van Ry Blvd
Mountlake Terrace, WA 98043

DATE
12/10/20

VERSION NOTES

V1
V2
V3
V4
V5
V6
V7
V8
V9
V10
V11
V12
V13
V14
V15

PAGE SCALE
1/4” = 1’-0”

PAGE #

B3-S45 - ELEVATION

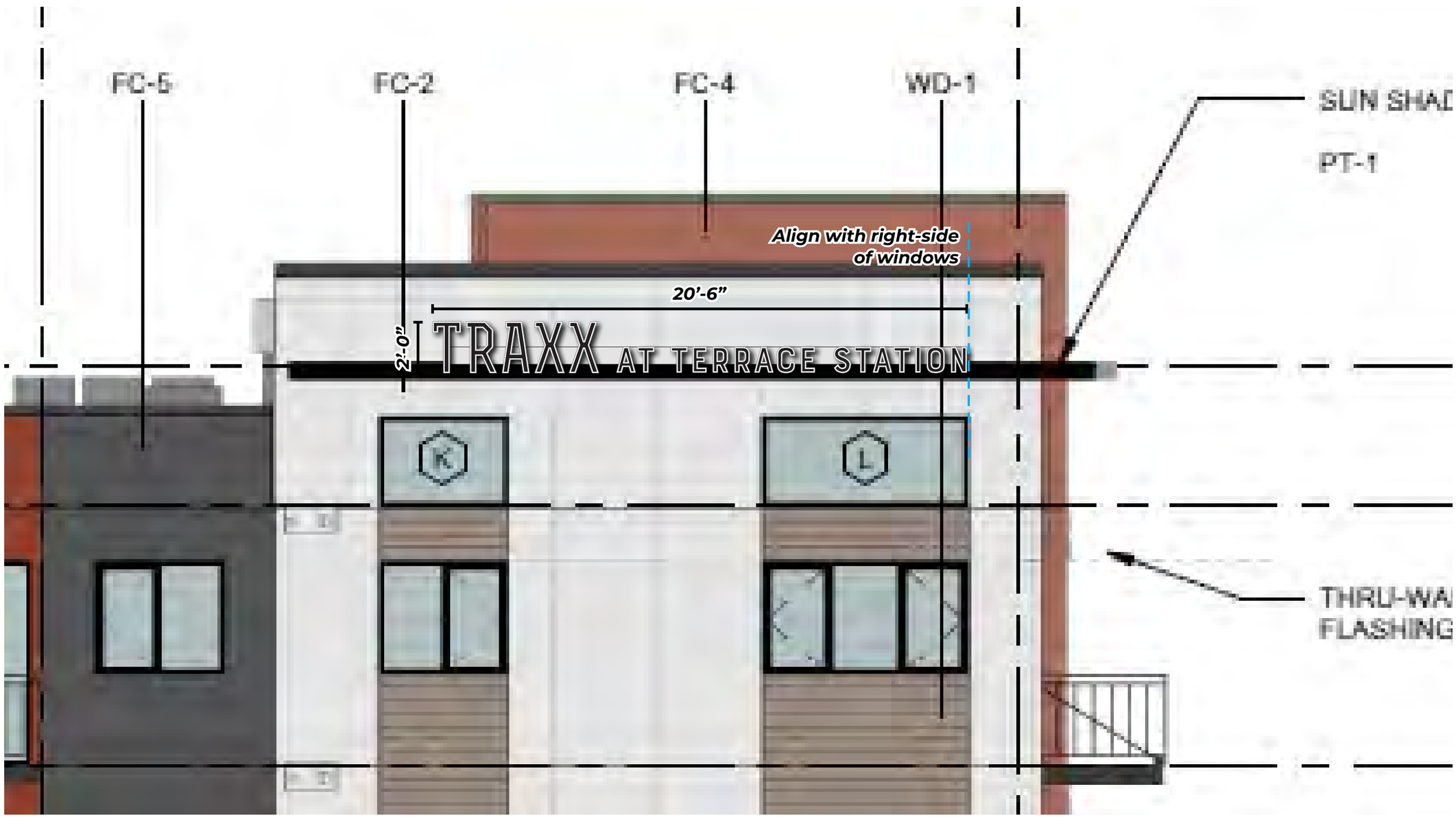

B3 West Elevation

A DESIGN STUDIO

MAIN CONTACT
Gracia Mueller
360.929.3077

CREATIVE
Brody Lund
425.359.7380

Additional information:
adesignstudioseattle.com

Follow us on social:
@adesignstudioseattle

COPYRIGHT
All artwork contained herein is the copyrighted property of A Design Studio Seattle. This includes, but is not limited to, logos, specifications, artwork and engineering. Any usage beyond internal reviews shall require our appoval and a separate design fee paid to A Design Studio Seattle. Usage rights can also be purchased (limited or complete) for an additional fee. Any unlawful distribution of said artwork is a violation of federal copyright laws.

PROJECT NAME
Terrace Station

PROJECT #
20-004

ADDRESS
23905 Van Ry Blvd
Mountlake Terrace, WA 98043

DATE
12/10/20

VERSION NOTES

V1
V2
V3
V4
V5
V6
V7
V8
V9
V10
V11
V12
V13
V14
V15

PAGE SCALE
1/4" = 1'-0"

PAGE #
148

B3-S46 - ELEVATION

B3 North Elevation

A DESIGN STUDIO

MAIN CONTACT
Gracia Mueller
360.929.3077

CREATIVE
Brody Lund
425.359.7380

Additional information:
adesignstudioseattle.com

Follow us on social:
@adesignstudioseattle

COPYRIGHT
All artwork contained herein is the copyrighted property of A Design Studio Seattle. This includes, but is not limited to, logos, specifications, artwork and engineering. Any usage beyond internal reviews shall require our appoval and a separate design fee paid to A Design Studio Seattle. Usage rights can also be purchased (limited or complete) for an additional fee. Any unlawful distribution of said artwork is a violation of federal copyright laws.

PROJECT NAME
Terrace Station

PROJECT #
20-004

ADDRESS
23905 Van Ry Blvd
Mountlake Terrace, WA 98043

DATE
12/10/20

VERSION NOTES

V1
V2
V3
V4
V5
V6
V7
V8
V9
V10
V11
V12
V13
V14
V15

PAGE SCALE
1/4" = 1'-0"

PAGE #

B3-S44, S45, & S46 - DETAILS

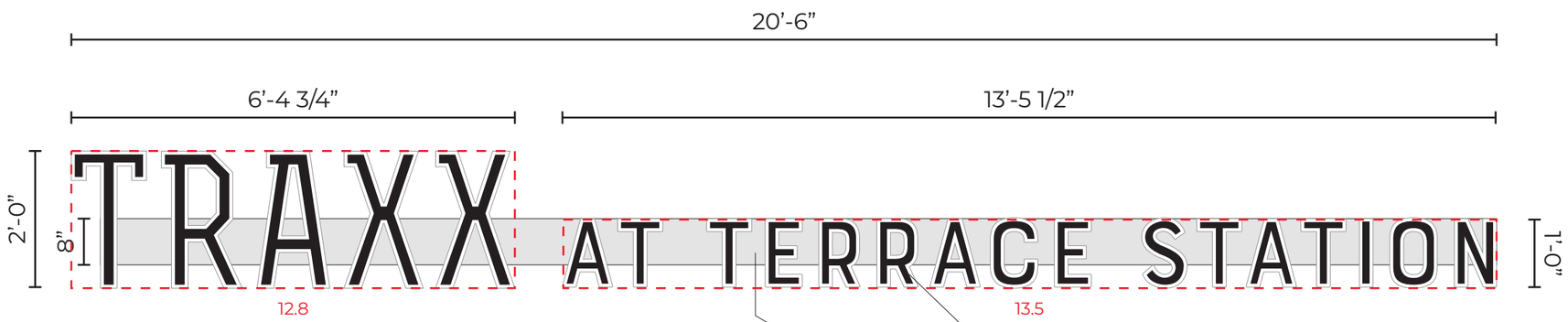

FACE VIEW

END VIEW

Faux neon acrylic letters, with perimeter illuminated white, with black vinyl inset faces.

8” x 8” alum. raceway, painted TBD, mounted to top of sun shade.

Sign B3-S42: Manufacture & install (1) single face illuminated canopy sign with faux neon acrylic.

Sign Area: 26.3 Square Feet

A DESIGN STUDIO

MAIN CONTACT
Gracia Mueller
360.929.3077

CREATIVE
Brody Lund
425.359.7380

Additional information:
adesignstudioseattle.com

Follow us on social:
@adesignstudioseattle

COPYRIGHT
All artwork contained herein is the copyrighted property of A Design Studio Seattle. This includes, but is not limited to, logos, specifications, artwork and engineering. Any usage beyond internal reviews shall require our appoval and a separate design fee paid to A Design Studio Seattle. Usage rights can also be purchased (limited or complete) for an additional fee. Any unlawful distribution of said artwork is a violation of federal copyright laws.

PROJECT NAME
Terrace Station

PROJECT #
20-004

ADDRESS
23905 Van Ry Blvd
Mountlake Terrace, WA 98043

DATE
12/10/20

VERSION NOTES

V1
V2
V3
V4
V5
V6
V7
V8
V9
V10
V11
V12
V13
V14
V15

PAGE SCALE
1/2” = 1’-0”

PAGE #
150

B3-S44, S45, & S46 - ATTACHMENT DETAILS

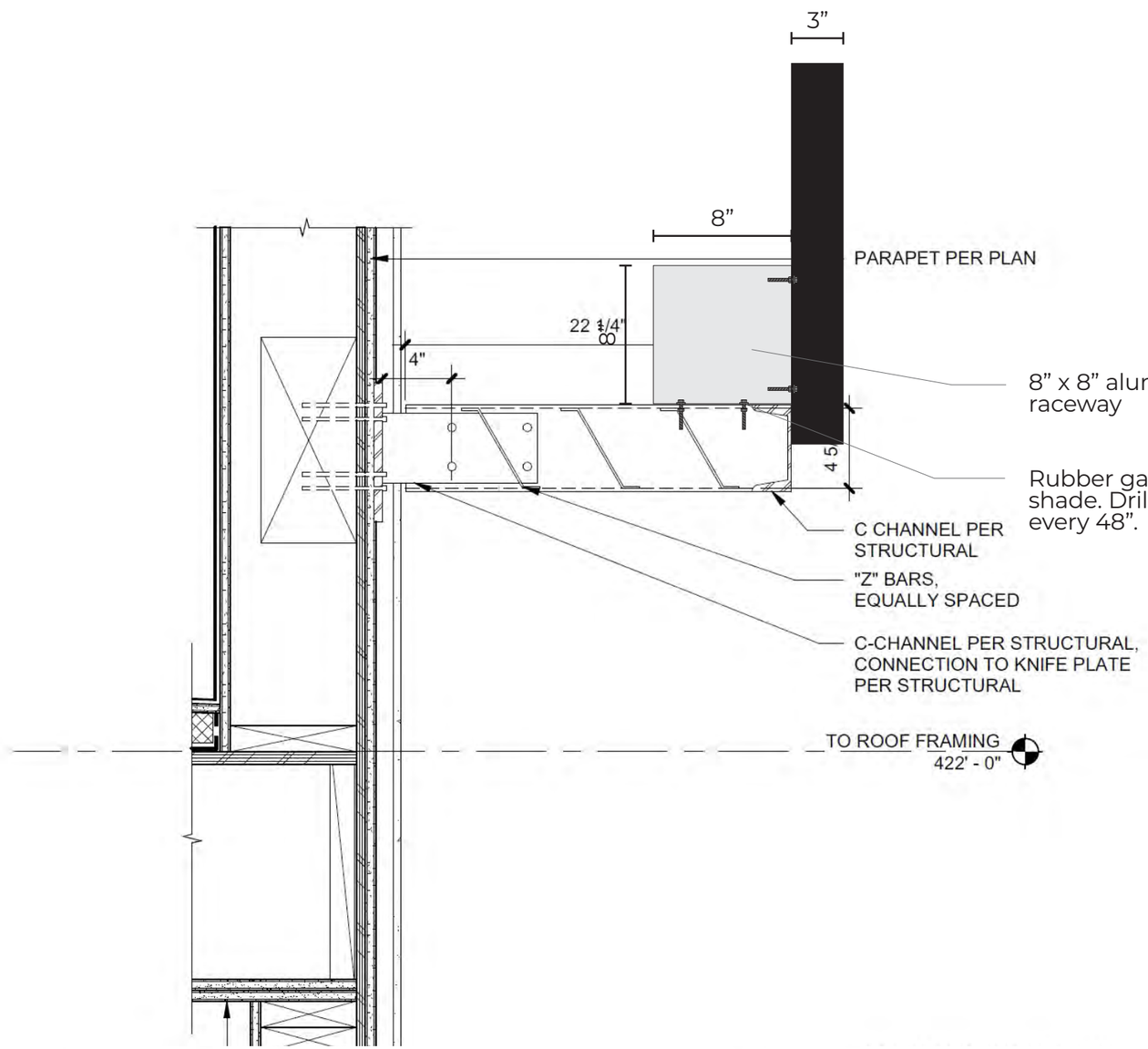

6 TYPICAL SUN SHADE SECTION & CONNECTION

A DESIGN STUDIO

MAIN CONTACT
Gracia Mueller
360.929.3077

CREATIVE
Brody Lund
425.359.7380

Additional information:
adesignstudioseattle.com

Follow us on social:
@adesignstudioseattle

COPYRIGHT
All artwork contained herein is the copyrighted property of A Design Studio Seattle. This includes, but is not limited to, logos, specifications, artwork and engineering. Any usage beyond internal reviews shall require our appoval and a separate design fee paid to A Design Studio Seattle. Usage rights can also be purchased (limited or complete) for an additional fee. Any unlawful distribution of said artwork is a violation of federal copyright laws.

PROJECT NAME
Terrace Station

PROJECT #
20-004

ADDRESS
23905 Van Ry Blvd
Mountlake Terrace, WA 98043

DATE
12/10/20

VERSION NOTES

V1
V2
V3
V4
V5
V6
V7
V8
V9
V10
V11
V12
V13
V14
V15

PAGE SCALE
1 1/2” = 1’-0”

PAGE #

B3-S47 - ELEVATION

Sign Area: 5.3 Square Feet

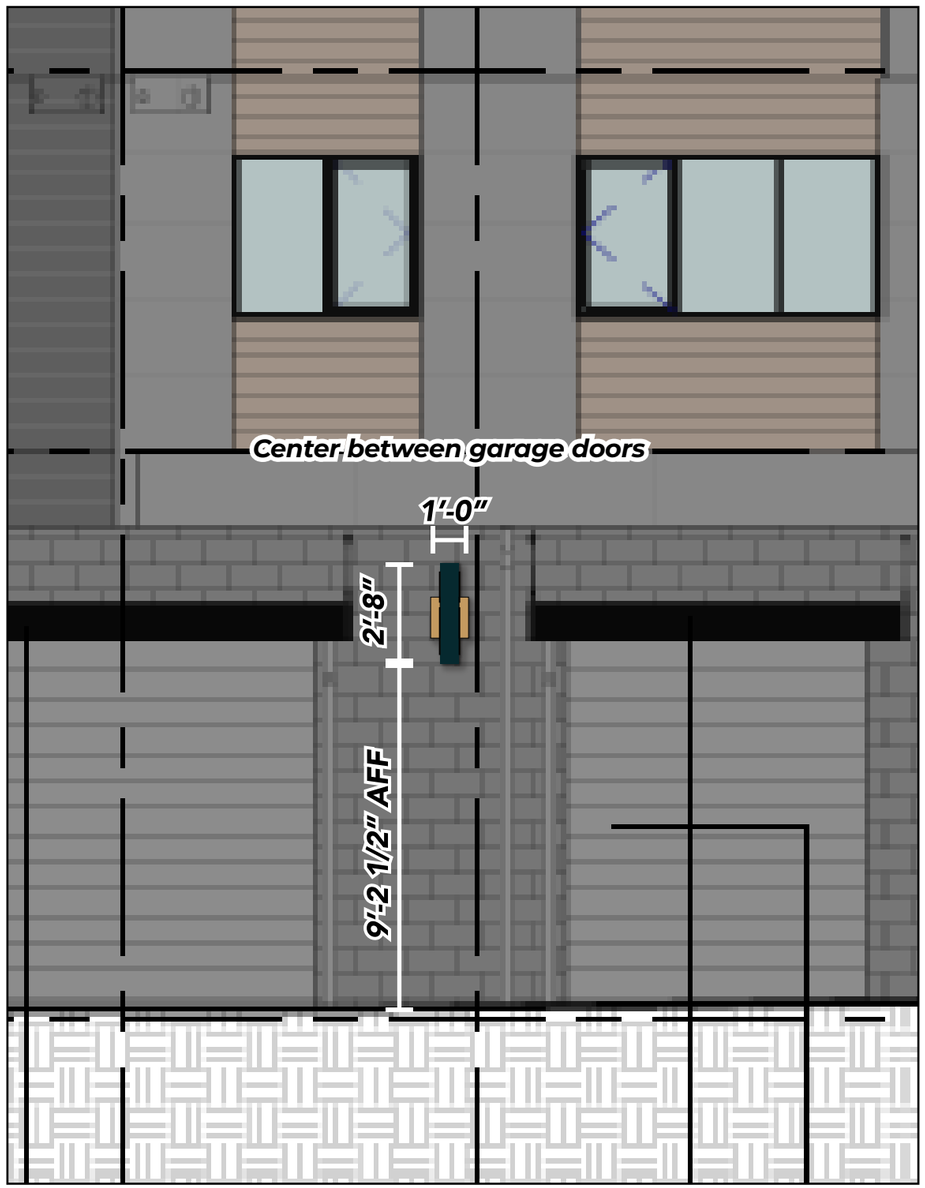

B3 North Elevation

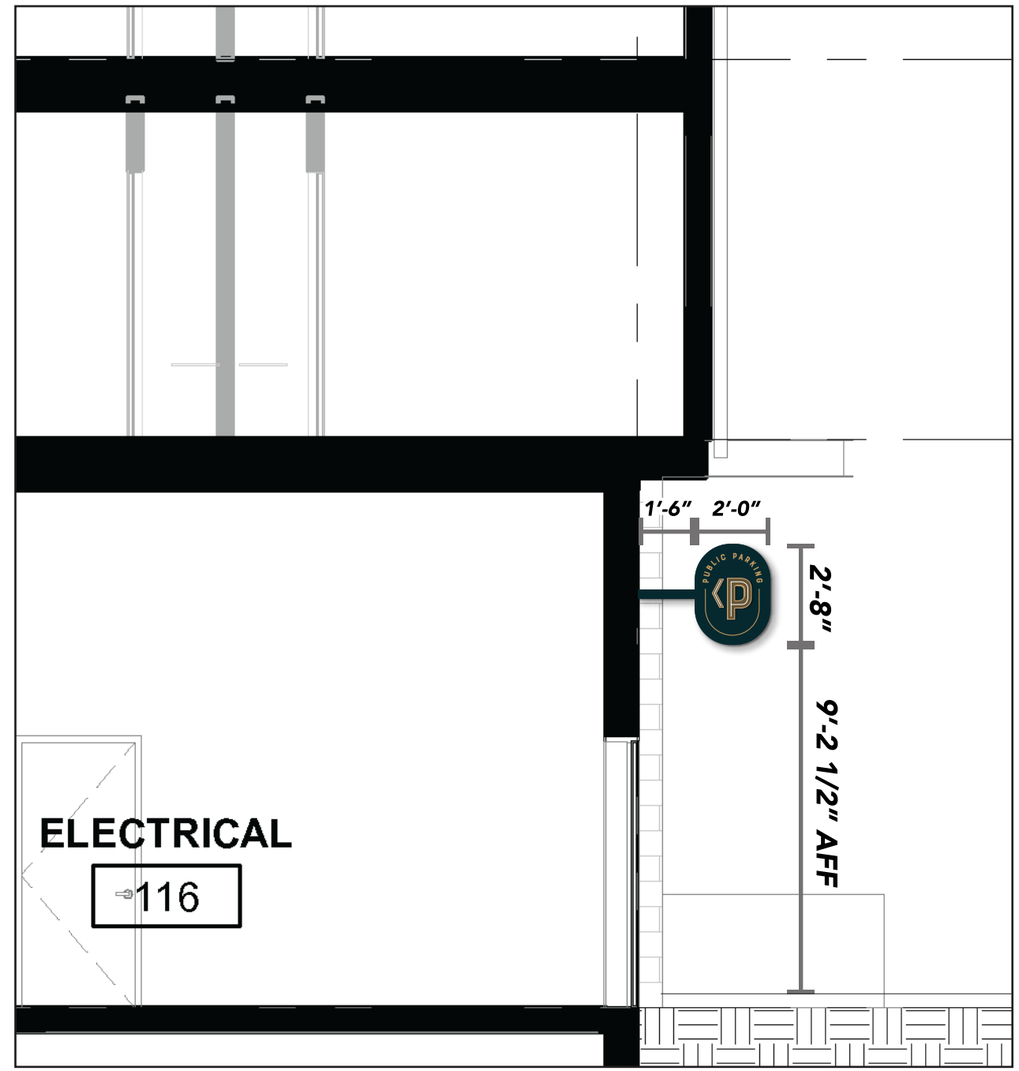

B3 North/South Section

A DESIGN STUDIO

MAIN CONTACT
Gracia Mueller
360.929.3077

CREATIVE
Brody Lund
425.359.7380

Additional information:
adesignstudioseattle.com

Follow us on social:
@adesignstudioseattle

COPYRIGHT
All artwork contained herein is the copyrighted property of A Design Studio Seattle. This includes, but is not limited to, logos, specifications, artwork and engineering. Any usage beyond internal reviews shall require our appoval and a separate design fee paid to A Design Studio Seattle. Usage rights can also be purchased (limited or complete) for an additional fee. Any unlawful distribution of said artwork is a violation of federal copyright laws.

PROJECT NAME
Terrace Station

PROJECT #
20-004

ADDRESS
23905 Van Ry Blvd
Mountlake Terrace, WA 98043

DATE
12/10/20

VERSION NOTES

V1
V2
V3
V4
V5
V6
V7
V8
V9
V10
V11
V12
V13
V14
V15

PAGE SCALE
1/4" = 1'-0"

PAGE #

B3-S47 - DETAILS

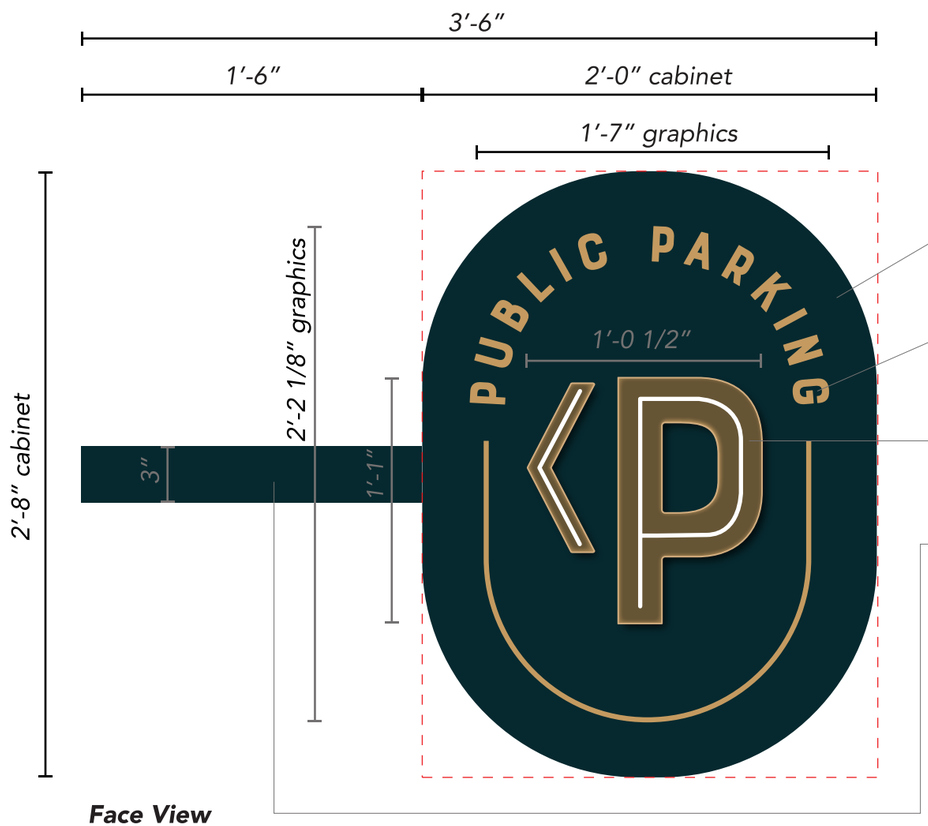

Face View

6″ deep fabricated alum. cabinet. Faces and returns painted navy, satin finish. Removable faces.

1/4″ clear acrylic push through graphics with gold translucent vinyl applied to faces. Illuminate with white LEDs.

3″ Alum. open pan channel graphics. Paint faces and returns gold. 8mm white single tube neon.

3″ alum. square tube arm. Paint navy, satin finish.

Attach with 3/8″ x 8″ x 8″ square tube knife plate.

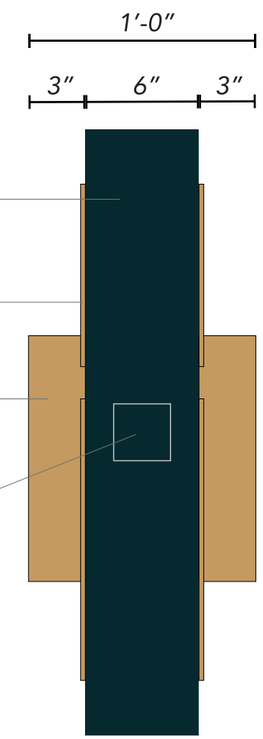

End View

Sign B2-S45: *Manufacture & install (1) double face illuminated blade sign with neon open pan channel graphics.*

Sign Area: 5.3 Square Feet

CLIENT TO PROVIDE
20 AMP / 120 VOLT
DEDICATED SIGN CIRCUIT WITHIN
6 FT OF SIGN LOCATION

Reverse Face View (NTS)

A DESIGN STUDIO

MAIN CONTACT
Gracia Mueller
360.929.3077

CREATIVE
Brody Lund
425.359.7380

Additional information:
adesignstudioseattle.com

Follow us on social:
@adesignstudioseattle

COPYRIGHT
All artwork contained herein is the copyrighted property of A Design Studio Seattle. This includes, but is not limited to, logos, specifications, artwork and engineering. Any usage beyond internal reviews shall require our appoval and a separate design fee paid to A Design Studio Seattle. Usage rights can also be purchased (limited or complete) for an additional fee. Any unlawful distribution of said artwork is a violation of federal copyright laws.

PROJECT NAME
Terrace Station

PROJECT #
20-004

ADDRESS
23905 Van Ry Blvd
Mountlake Terrace, WA 98043

DATE
12/10/20

VERSION NOTES

V1
V2
V3
V4
V5
V6
V7
V8
V9
V10
V11
V12
V13
V14
V15

PAGE SCALE
1 1/2″ = 1′-0″

PAGE #
153

B3-S47 - ATTACHMENT DETAILS

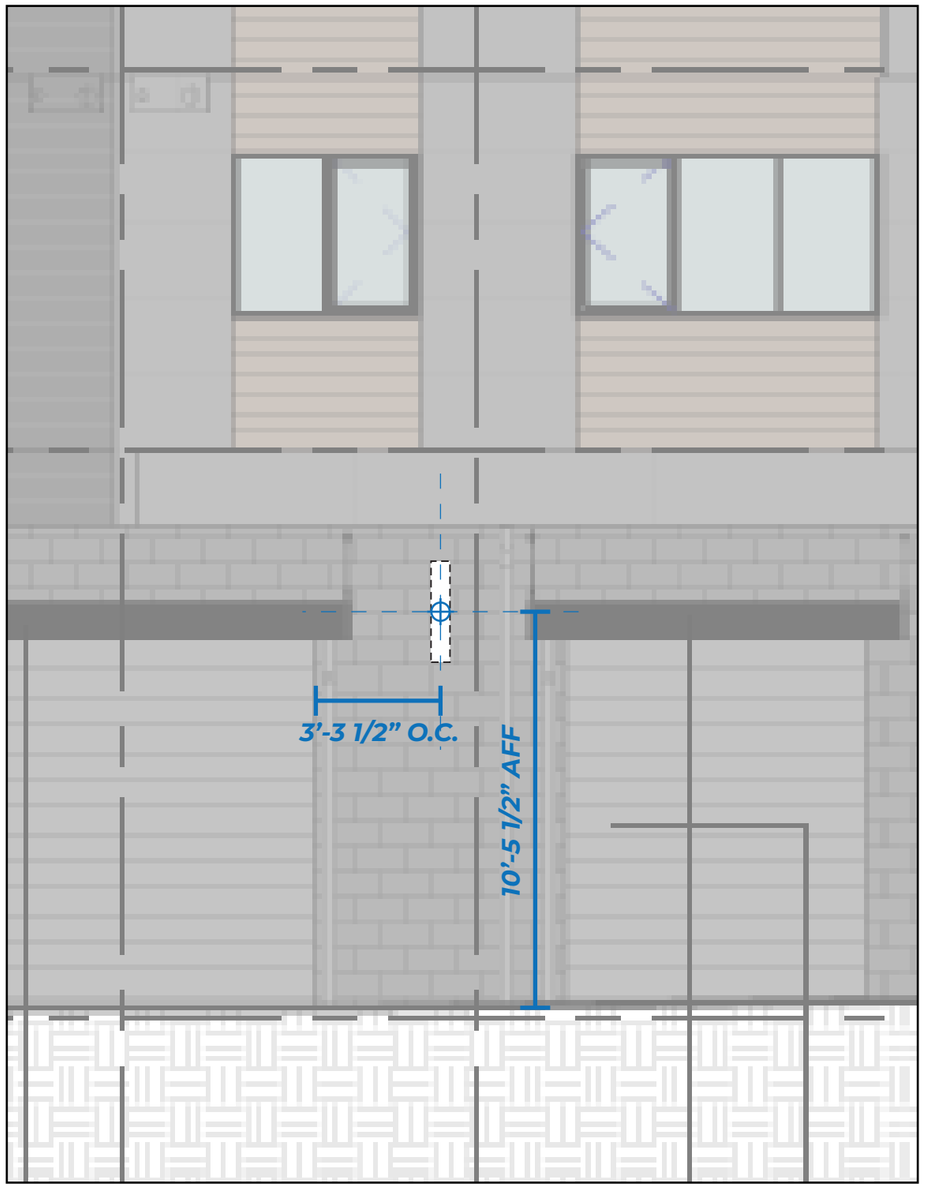

B3 North Elevation
Scale: 1/4" = 1'-0"

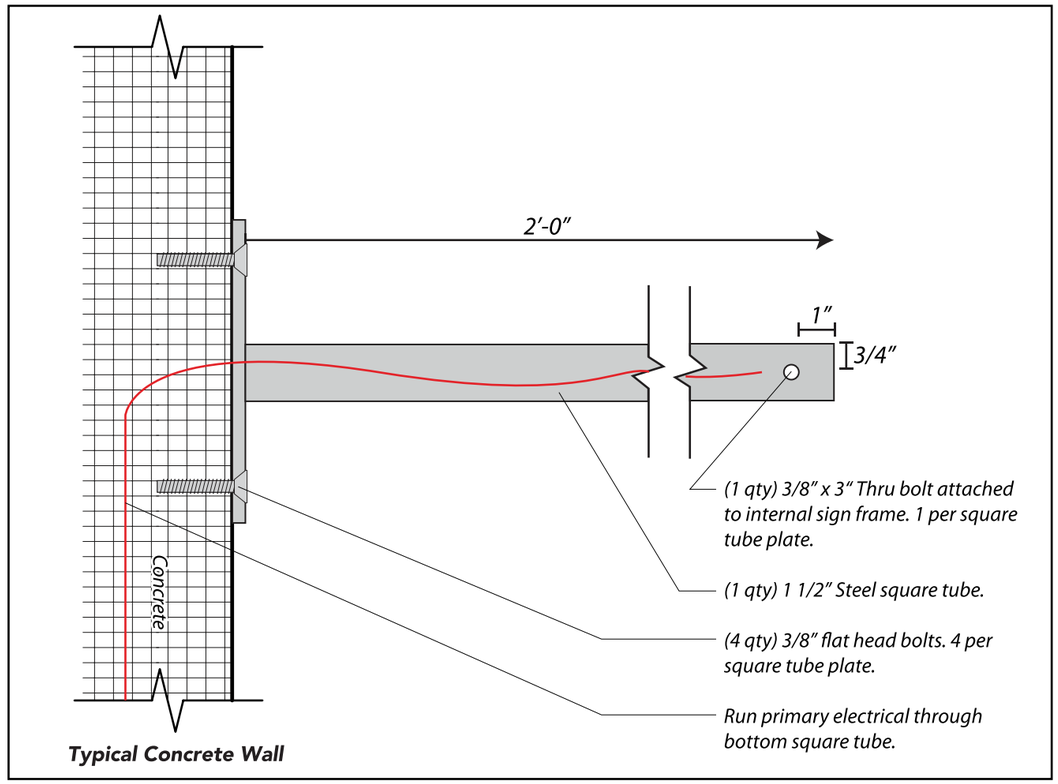

Square Tube Plate Install Detail
Scale: 3"=1'-0"

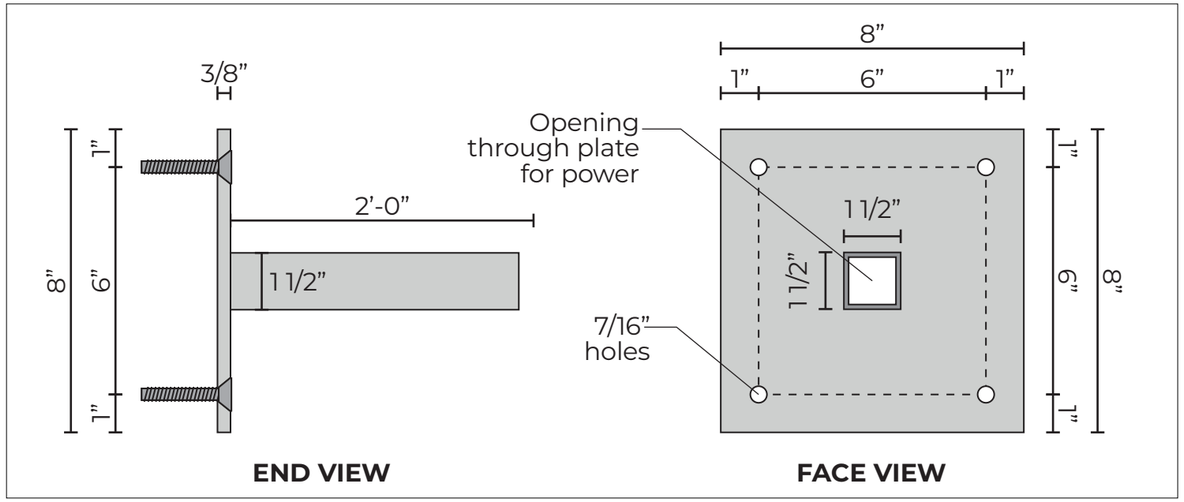

3/8" x 8" x 8" Steel Square Tube Plate Detail
Scale: 3" = 1'-0"

A DESIGN STUDIO

MAIN CONTACT
Gracia Mueller
360.929.3077

CREATIVE
Brody Lund
425.359.7380

Additional information:
adesignstudioseattle.com

Follow us on social:
@adesignstudioseattle

COPYRIGHT
All artwork contained herein is the copyrighted property of A Design Studio Seattle. This includes, but is not limited to, logos, specifications, artwork and engineering. Any usage beyond internal reviews shall require our appoval and a separate design fee paid to A Design Studio Seattle. Usage rights can also be purchased (limited or complete) for an additional fee. Any unlawful distribution of said artwork is a violation of federal copyright laws.

PROJECT NAME
Terrace Station

PROJECT #
20-004

ADDRESS
23905 Van Ry Blvd
Mountlake Terrace, WA 98043

DATE
12/10/20

VERSION NOTES
V1
V2
V3
V4
V5
V6
V7
V8
V9
V10
V11
V12
V13
V14
V15

PAGE SCALE
1/4" = 1'-0"

B3-S48 - ELEVATION

Sign Area: 24.0 Square Feet

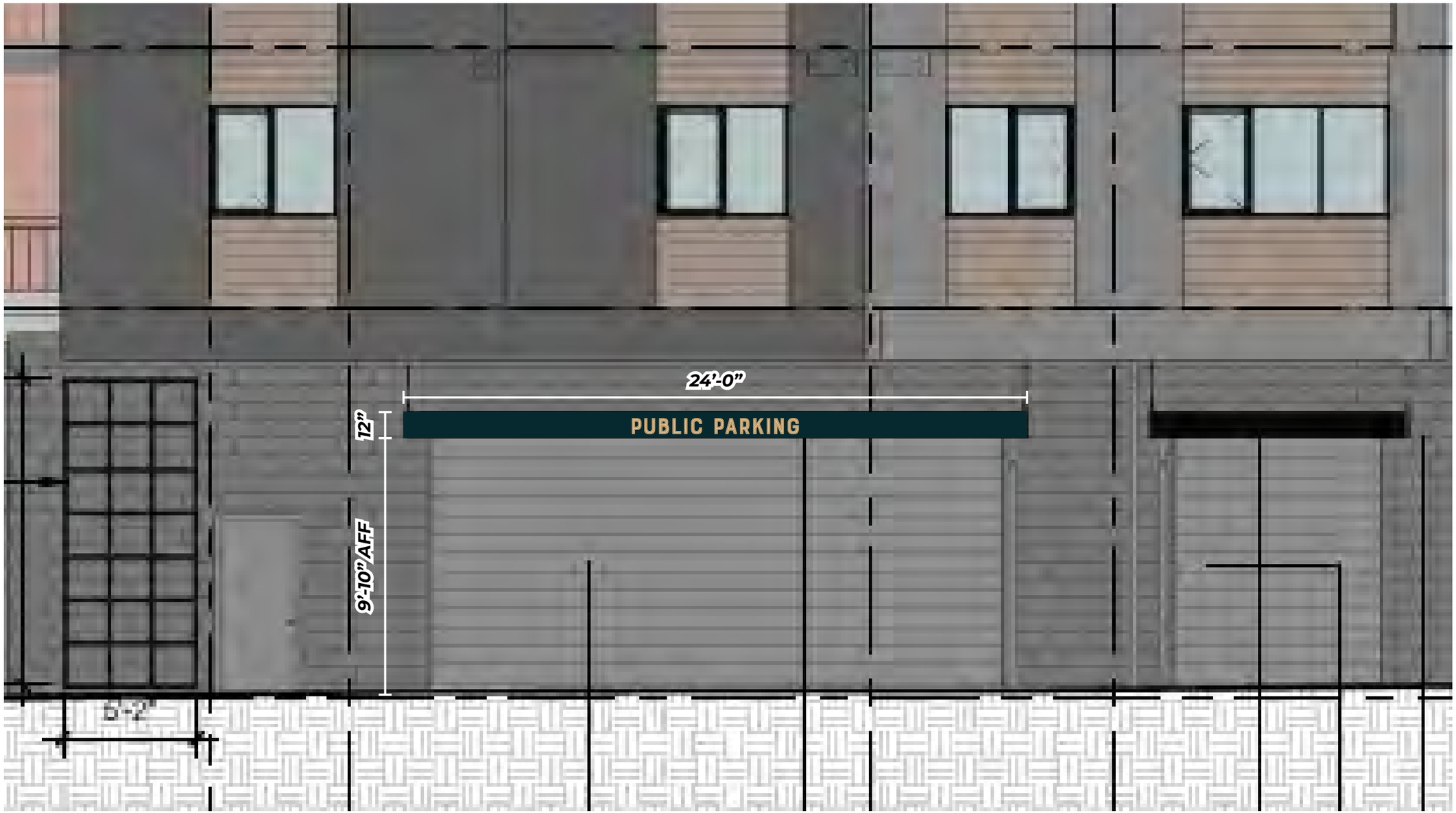

B3 North Elevation

A DESIGN STUDIO

MAIN CONTACT
Gracia Mueller
360.929.3077

CREATIVE
Brody Lund
425.359.7380

Additional information:
adesignstudioseattle.com

Follow us on social:
@adesignstudioseattle

COPYRIGHT
All artwork contained herein is the copyrighted property of A Design Studio Seattle. This includes, but is not limited to, logos, specifications, artwork and engineering. Any usage beyond internal reviews shall require our appoval and a separate design fee paid to A Design Studio Seattle. Usage rights can also be purchased (limited or complete) for an additional fee. Any unlawful distribution of said artwork is a violation of federal copyright laws.

PROJECT NAME
Terrace Station

PROJECT #
20-004

ADDRESS
23905 Van Ry Blvd
Mountlake Terrace, WA 98043

DATE
12/10/20

VERSION NOTES

V1
V2
V3
V4
V5
V6
V7
V8
V9
V10
V11
V12
V13
V14
V15

PAGE SCALE
1/4" = 1'-0"

PAGE #
155

B3-S48 - DETAILS

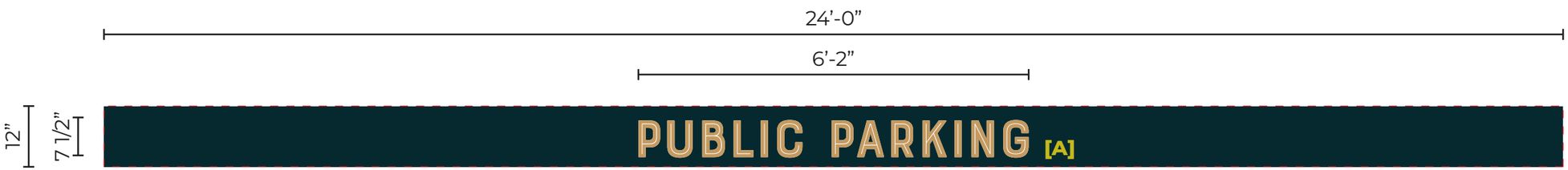

FACE VIEW

Sign B3-S47: *Manufacture & install (1) single-face non-illuminated wall sign with digital print graphics.*

Sign Area: 24.0 Square Feet

[A] Digitally-printed first-surface vinyl graphics. Colors to match brand colors.

A DESIGN STUDIO

MAIN CONTACT
Gracia Mueller
360.929.3077

CREATIVE
Brody Lund
425.359.7380

Additional information:
adesignstudioseattle.com

Follow us on social:
@adesignstudioseattle

COPYRIGHT
All artwork contained herein is the copyrighted property of A Design Studio Seattle. This includes, but is not limited to, logos, specifications, artwork and engineering. Any usage beyond internal reviews shall require our appoval and a separate design fee paid to A Design Studio Seattle. Usage rights can also be purchased (limited or complete) for an additional fee. Any unlawful distribution of said artwork is a violation of federal copyright laws.

PROJECT NAME
Terrace Station

PROJECT #
20-004

ADDRESS
23905 Van Ry Blvd
Mountlake Terrace, WA 98043

DATE
12/10/20

VERSION NOTES

V1
V2
V3
V4
V5
V6
V7
V8
V9
V10
V11
V12
V13
V14
V15

PAGE SCALE
1/2” = 1’-0”

PAGE #

B3-S49 - ELEVATION

Sign Area: 26.0 Square Feet

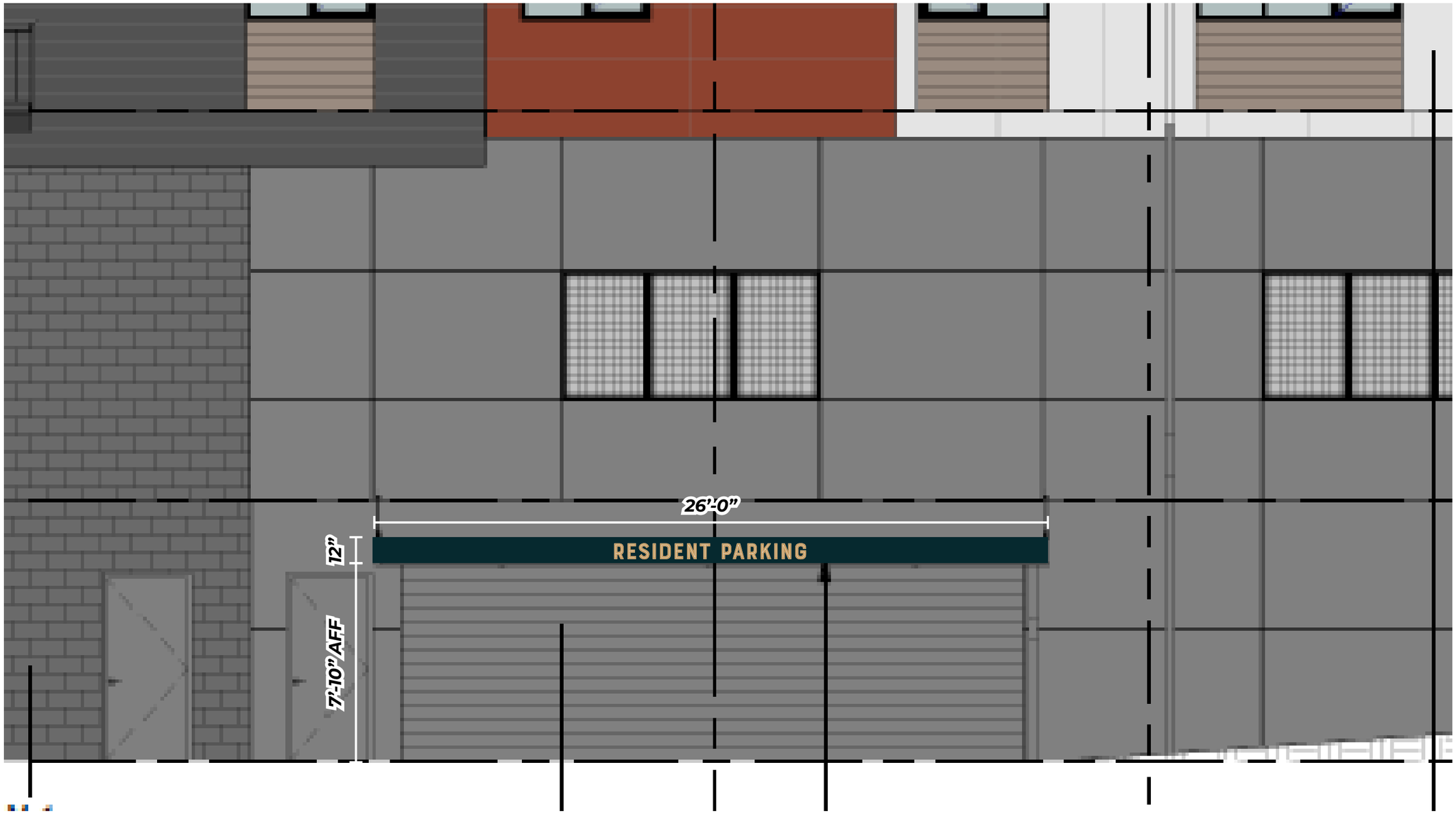

B3 East Elevation

A DESIGN STUDIO

MAIN CONTACT
Gracia Mueller
360.929.3077

CREATIVE
Brody Lund
425.359.7380

Additional information:
adesignstudioseattle.com

Follow us on social:
@adesignstudioseattle

COPYRIGHT
All artwork contained herein is the copyrighted property of A Design Studio Seattle. This includes, but is not limited to, logos, specifications, artwork and engineering. Any usage beyond internal reviews shall require our appoval and a separate design fee paid to A Design Studio Seattle. Usage rights can also be purchased (limited or complete) for an additional fee. Any unlawful distribution of said artwork is a violation of federal copyright laws.

PROJECT NAME
Terrace Station

PROJECT #
20-004

ADDRESS
23905 Van Ry Blvd
Mountlake Terrace, WA 98043

DATE
12/10/20

VERSION NOTES

V1
V2
V3
V4
V5
V6
V7
V8
V9
V10
V11
V12
V13
V14
V15

PAGE SCALE
1/4" = 1'-0"

PAGE #

B3-S49 - DETAILS

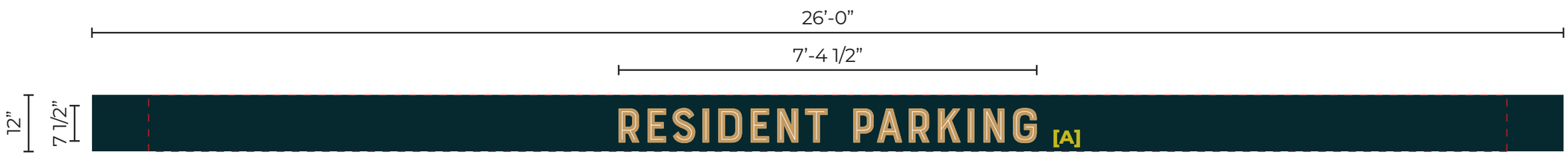

FACE VIEW

Sign B3-S48: *Manufacture & install (1) single-face non-illuminated wall sign with digital print graphics.*

Sign Area: 26.0 Square Feet

[A] Digitally-printed first-surface vinyl graphics. Colors to match brand colors.

A DESIGN STUDIO

MAIN CONTACT
Gracia Mueller
360.929.3077

CREATIVE
Brody Lund
425.359.7380

Additional information:
adesignstudioseattle.com

Follow us on social:
@adesignstudioseattle

COPYRIGHT
All artwork contained herein is the copyrighted property of A Design Studio Seattle. This includes, but is not limited to, logos, specifications, artwork and engineering. Any usage beyond internal reviews shall require our appoval and a separate design fee paid to A Design Studio Seattle. Usage rights can also be purchased (limited or complete) for an additional fee. Any unlawful distribution of said artwork is a violation of federal copyright laws.

PROJECT NAME
Terrace Station

PROJECT #
20-004

ADDRESS
23905 Van Ry Blvd
Mountlake Terrace, WA 98043

DATE
12/10/20

VERSION NOTES

V1
V2
V3
V4
V5
V6
V7
V8
V9
V10
V11
V12
V13
V14
V15

PAGE SCALE
1/2” = 1’-0”

PAGE #
158

B3-S50 - ELEVATION

Sign Area: 40.0 Square Feet

B3 South Elevation

A DESIGN STUDIO

MAIN CONTACT
Gracia Mueller
360.929.3077

CREATIVE
Brody Lund
425.359.7380

Additional information:
adesignstudioseattle.com

Follow us on social:
@adesignstudioseattle

COPYRIGHT
All artwork contained herein is the copyrighted property of A Design Studio Seattle. This includes, but is not limited to, logos, specifications, artwork and engineering. Any usage beyond internal reviews shall require our appoval and a separate design fee paid to A Design Studio Seattle. Usage rights can also be purchased (limited or complete) for an additional fee. Any unlawful distribution of said artwork is a violation of federal copyright laws.

PROJECT NAME
Terrace Station

PROJECT #
20-004

ADDRESS
23905 Van Ry Blvd
Mountlake Terrace, WA 98043

DATE
12/10/20

VERSION NOTES

V1
V2
V3
V4
V5
V6
V7
V8
V9
V10
V11
V12
V13
V14
V15

PAGE SCALE
1/4" = 1'-0"

PAGE #
159

B3-S50 - ATTACHMENT DETAILS

FINAL ATTACHMENT TBD.

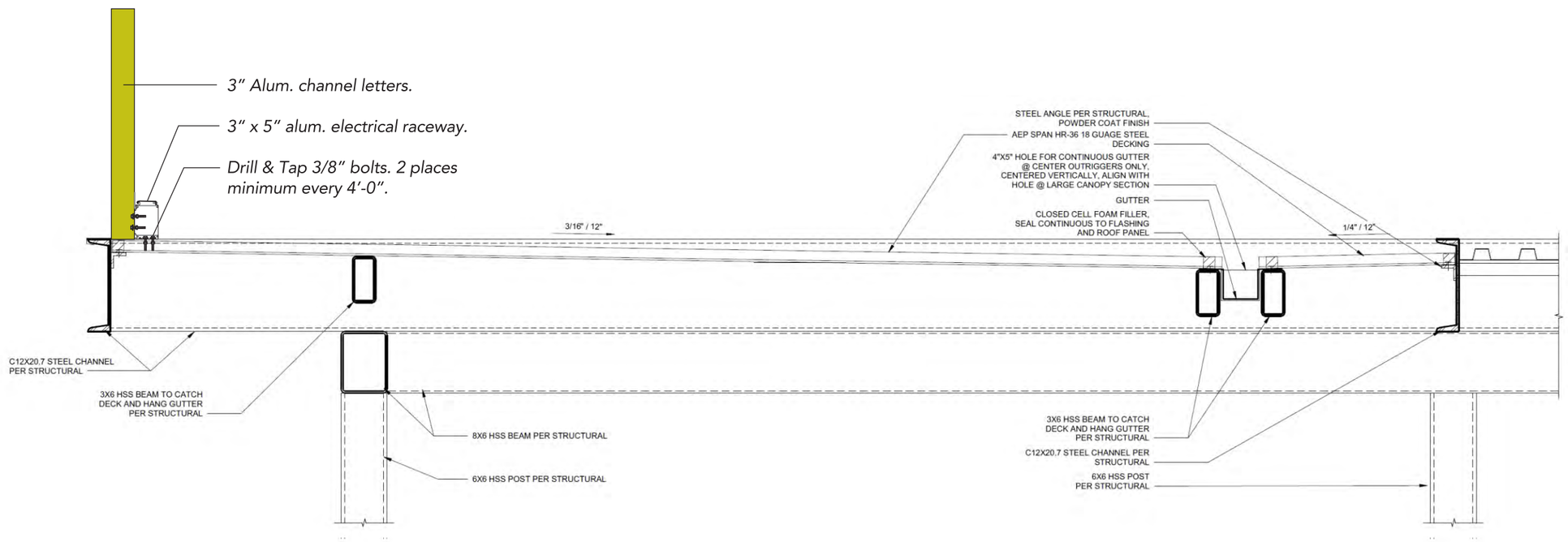

3 LARGE CANOPY CORNER SECTION

A DESIGN STUDIO

MAIN CONTACT
Gracia Mueller
360.929.3077

CREATIVE
Brody Lund
425.359.7380

Additional information:
adesignstudioseattle.com

Follow us on social:
@adesignstudioseattle

COPYRIGHT
All artwork contained herein is the copyrighted property of A Design Studio Seattle. This includes, but is not limited to, logos, specifications, artwork and engineering. Any usage beyond internal reviews shall require our appoval and a separate design fee paid to A Design Studio Seattle. Usage rights can also be purchased (limited or complete) for an additional fee. Any unlawful distribution of said artwork is a violation of federal copyright laws.

PROJECT NAME
Terrace Station

PROJECT #
20-004

ADDRESS
23905 Van Ry Blvd
Mountlake Terrace, WA 98043

DATE
12/10/20

VERSION NOTES

V1
V2
V3
V4
V5
V6
V7
V8
V9
V10
V11
V12
V13
V14
V15

PAGE SCALE
3/4" = 1'-0"

PAGE #
160

B3-S51 - ELEVATION

Sign Area: 40.0 Square Feet

B3 West Elevation

A DESIGN STUDIO

MAIN CONTACT
Gracia Mueller
360.929.3077

CREATIVE
Brody Lund
425.359.7380

Additional information:
adesignstudioseattle.com

Follow us on social:
@adesignstudioseattle

COPYRIGHT
All artwork contained herein is the copyrighted property of A Design Studio Seattle. This includes, but is not limited to, logos, specifications, artwork and engineering. Any usage beyond internal reviews shall require our appoval and a separate design fee paid to A Design Studio Seattle. Usage rights can also be purchased (limited or complete) for an additional fee. Any unlawful distribution of said artwork is a violation of federal copyright laws.

PROJECT NAME
Terrace Station

PROJECT #
20-004

ADDRESS
23905 Van Ry Blvd
Mountlake Terrace, WA 98043

DATE
12/10/20

VERSION NOTES

V1
V2
V3
V4
V5
V6
V7
V8
V9
V10
V11
V12
V13
V14
V15

PAGE SCALE
1/4" = 1'-0"

PAGE #

B3-S51 - ATTACHMENT DETAILS

Sign Area: 40.0 Square Feet

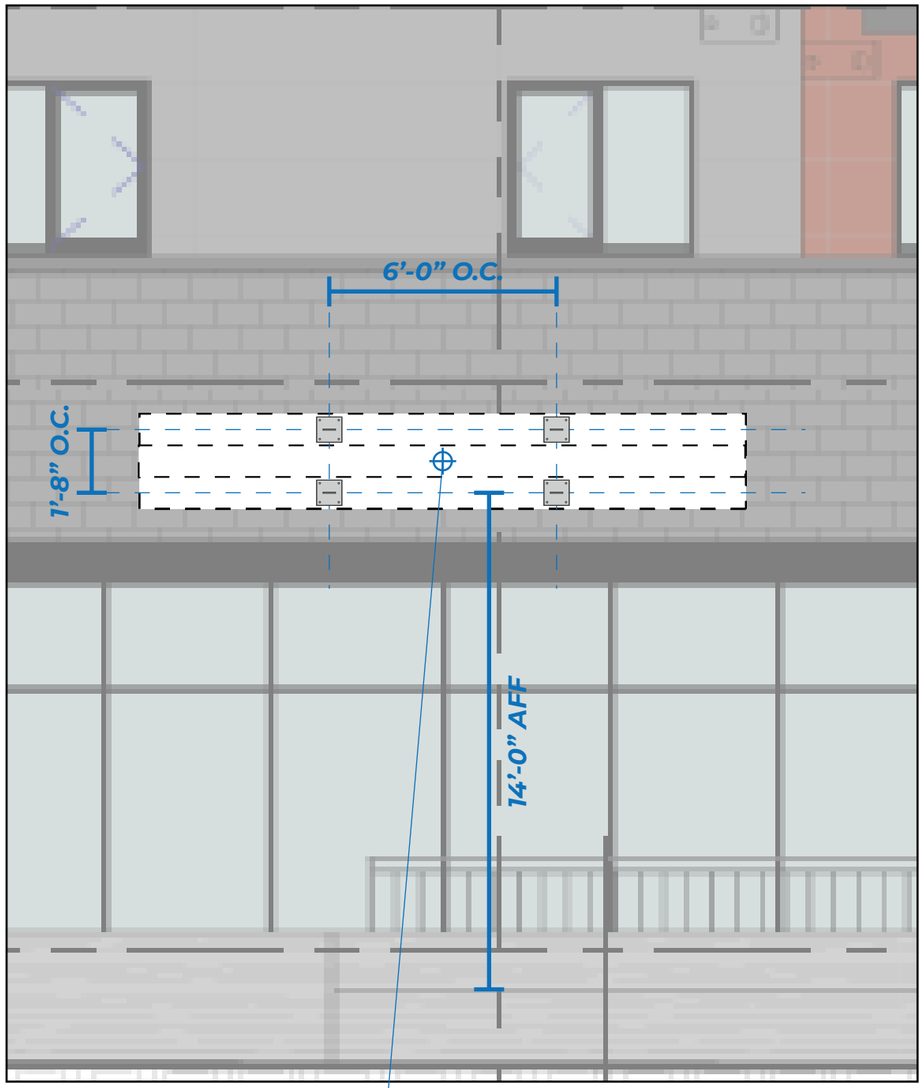

B3 West Elevation
Scale: 1/4" = 1'-0"

Primary Electrical Location
Client to provide 20 Amp / 120 Volt dedicated circuit to sign location

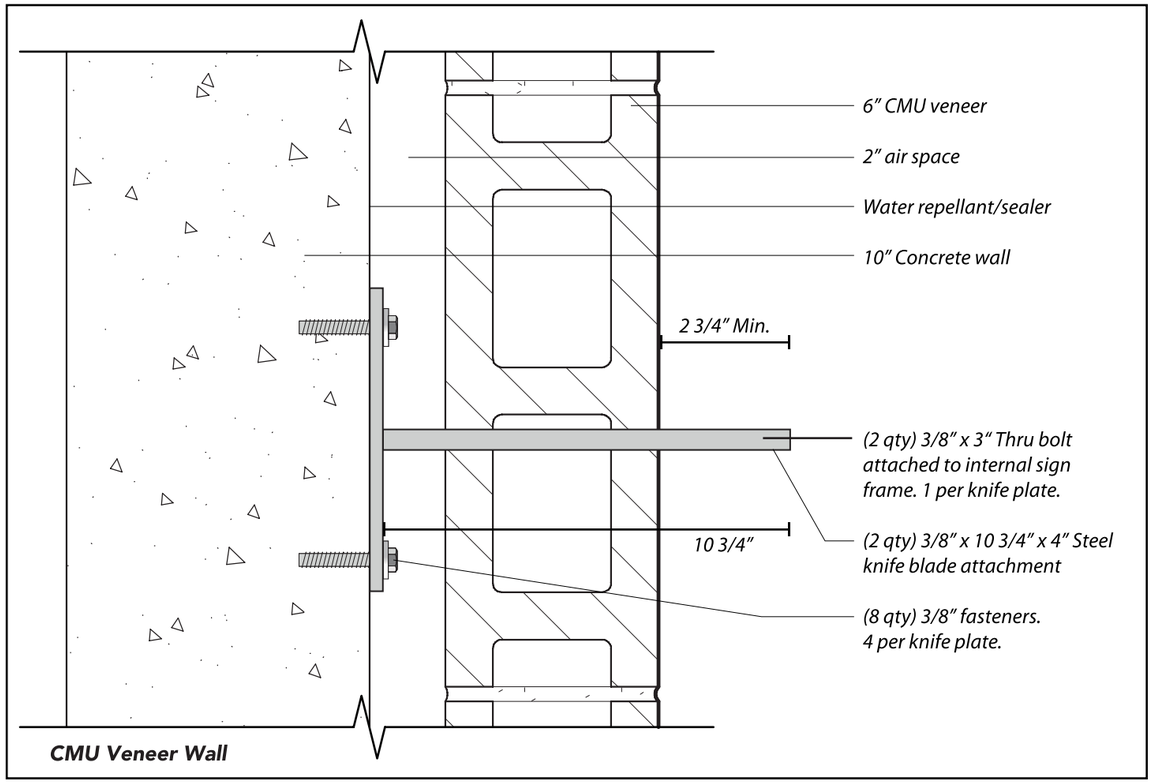

Knife Plate Install Detail
Scale: 3"=1'-0"

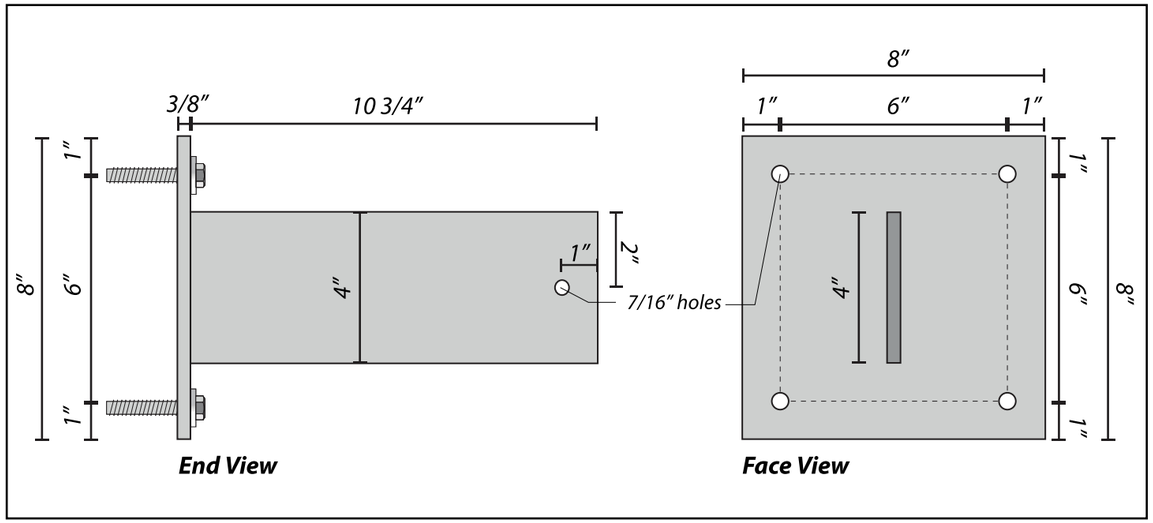

3/8" x 8" x 8" Steel Plate Detail
Scale: 3"=1'-0"

A DESIGN STUDIO

MAIN CONTACT
Gracia Mueller
360.929.3077

CREATIVE
Brody Lund
425.359.7380

Additional information:
adesignstudioseattle.com

Follow us on social:
@adesignstudioseattle

COPYRIGHT
All artwork contained herein is the copyrighted property of A Design Studio Seattle. This includes, but is not limited to, logos, specifications, artwork and engineering. Any usage beyond internal reviews shall require our appoval and a separate design fee paid to A Design Studio Seattle. Usage rights can also be purchased (limited or complete) for an additional fee. Any unlawful distribution of said artwork is a violation of federal copyright laws.

PROJECT NAME
Terrace Station

PROJECT #
20-004

ADDRESS
23905 Van Ry Blvd
Mountlake Terrace, WA 98043

DATE
12/10/20

VERSION NOTES

V1
V2
V3
V4
V5
V6
V7
V8
V9
V10
V11
V12
V13
V14
V15

PAGE SCALE
1/4" = 1'-0"

PAGE #
162

B3-S52 - DETAILS

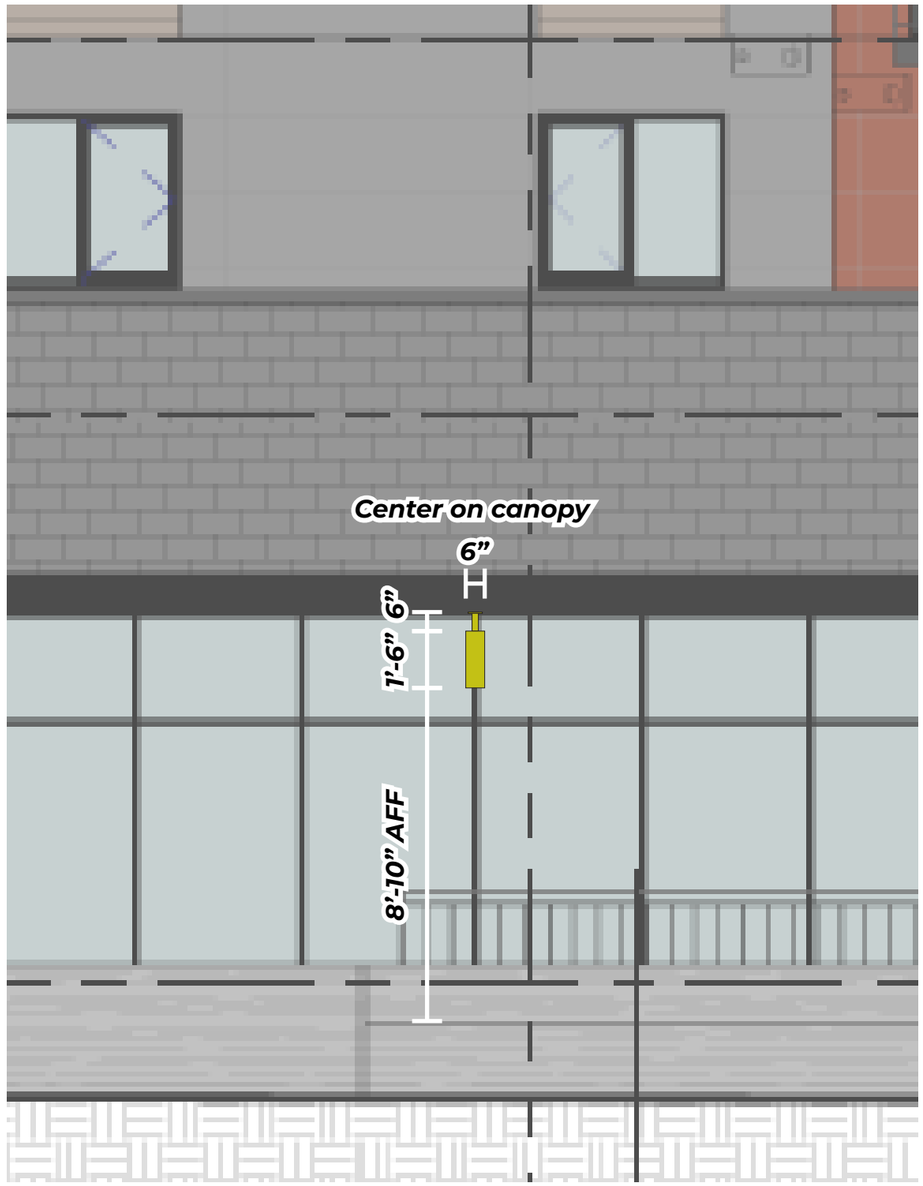

B3 West Elevation

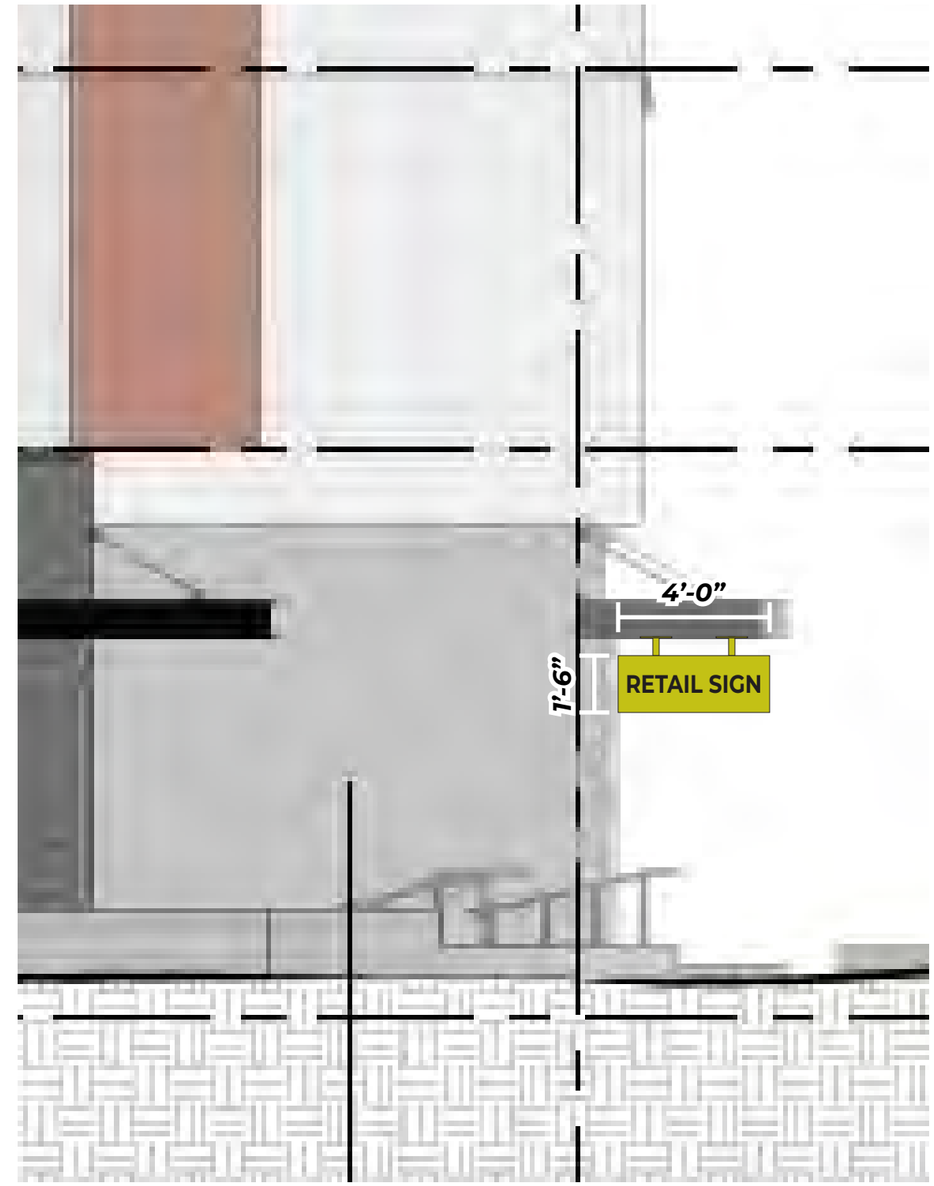

B3 North Elevation

A DESIGN STUDIO

MAIN CONTACT
Gracia Mueller
360.929.3077

CREATIVE
Brody Lund
425.359.7380

Additional information:
adesignstudioseattle.com

Follow us on social:
@adesignstudioseattle

COPYRIGHT
All artwork contained herein is the copyrighted property of A Design Studio Seattle. This includes, but is not limited to, logos, specifications, artwork and engineering. Any usage beyond internal reviews shall require our appoval and a separate design fee paid to A Design Studio Seattle. Usage rights can also be purchased (limited or complete) for an additional fee. Any unlawful distribution of said artwork is a violation of federal copyright laws.

PROJECT NAME
Terrace Station

PROJECT #
20-004

ADDRESS
23905 Van Ry Blvd
Mountlake Terrace, WA 98043

DATE
12/10/20

VERSION NOTES

V1
V2
V3
V4
V5
V6
V7
V8
V9
V10
V11
V12
V13
V14
V15

PAGE SCALE
1/4” = 1’-0”

B3-S52 - ATTACHMENT DETAILS

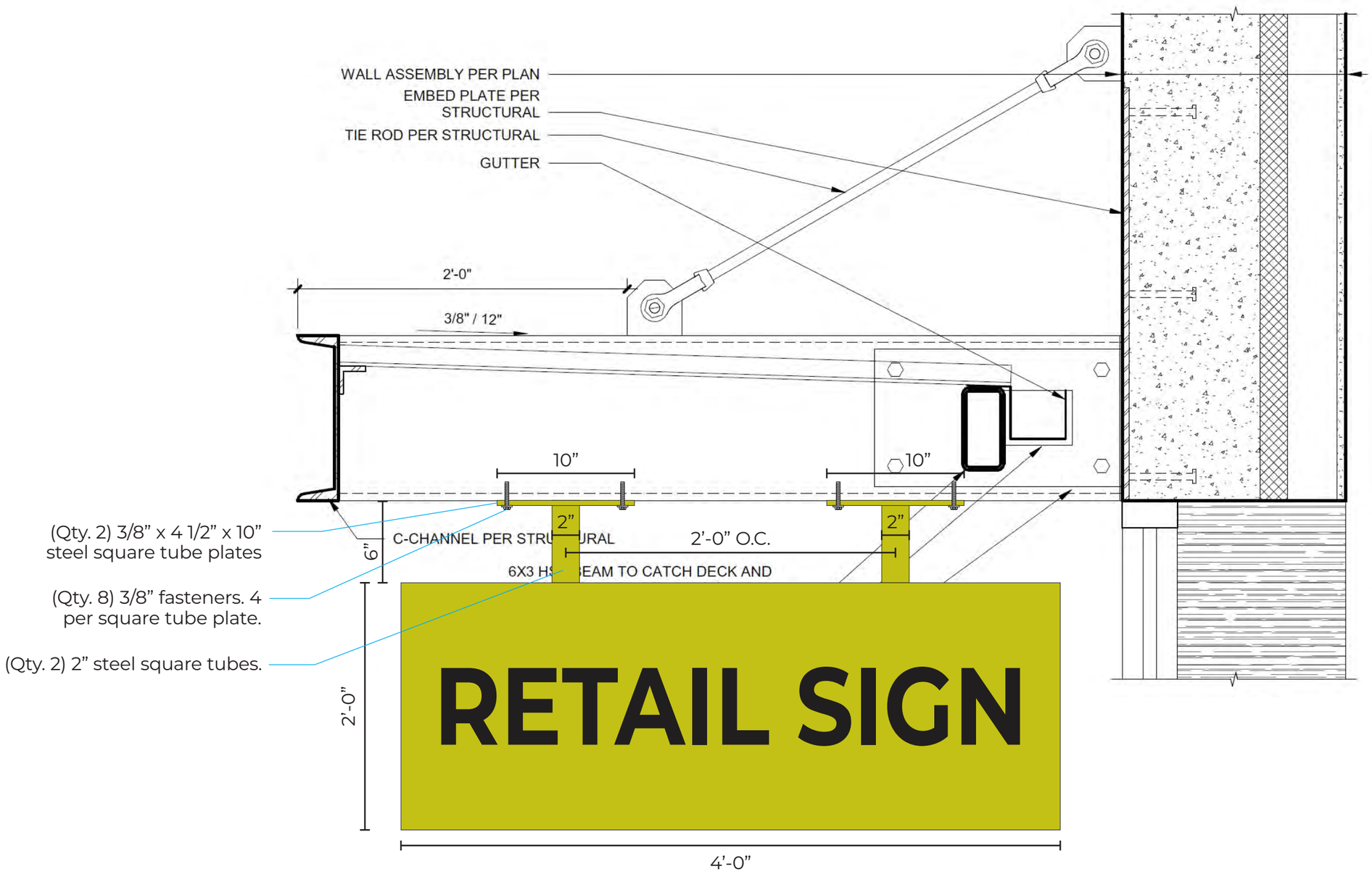

Center within canopy

A DESIGN STUDIO

MAIN CONTACT
Gracia Mueller
360.929.3077

CREATIVE
Brody Lund
425.359.7380

Additional information:
adesignstudioseattle.com

Follow us on social:
@adesignstudioseattle

COPYRIGHT
All artwork contained herein is the copyrighted property of A Design Studio Seattle. This includes, but is not limited to, logos, specifications, artwork and engineering. Any usage beyond internal reviews shall require our appoval and a separate design fee paid to A Design Studio Seattle. Usage rights can also be purchased (limited or complete) for an additional fee. Any unlawful distribution of said artwork is a violation of federal copyright laws.

PROJECT NAME
Terrace Station

PROJECT #
20-004

ADDRESS
23905 Van Ry Blvd
Mountlake Terrace, WA 98043

DATE
12/10/20

VERSION NOTES

V1
V2
V3
V4
V5
V6
V7
V8
V9
V10
V11
V12
V13
V14
V15

PAGE SCALE
1/4" = 1'-0"

PAGE #
164

B3-S53 - ELEVATION

Sign Area: 40.0 Square Feet

B3 West Elevation

A DESIGN STUDIO

MAIN CONTACT
Gracia Mueller
360.929.3077

CREATIVE
Brody Lund
425.359.7380

Additional information:
adesignstudioseattle.com

Follow us on social:
@adesignstudioseattle

COPYRIGHT
All artwork contained herein is the copyrighted property of A Design Studio Seattle. This includes, but is not limited to, logos, specifications, artwork and engineering. Any usage beyond internal reviews shall require our appoval and a separate design fee paid to A Design Studio Seattle. Usage rights can also be purchased (limited or complete) for an additional fee. Any unlawful distribution of said artwork is a violation of federal copyright laws.

PROJECT NAME
Terrace Station

PROJECT #
20-004

ADDRESS
23905 Van Ry Blvd
Mountlake Terrace, WA 98043

DATE
12/10/20

VERSION NOTES

V1
V2
V3
V4
V5
V6
V7
V8
V9
V10
V11
V12
V13
V14
V15

PAGE SCALE
1/4" = 1'-0"

B3-S53 - ATTACHMENT DETAILS

Sign Area: 40.0 Square Feet

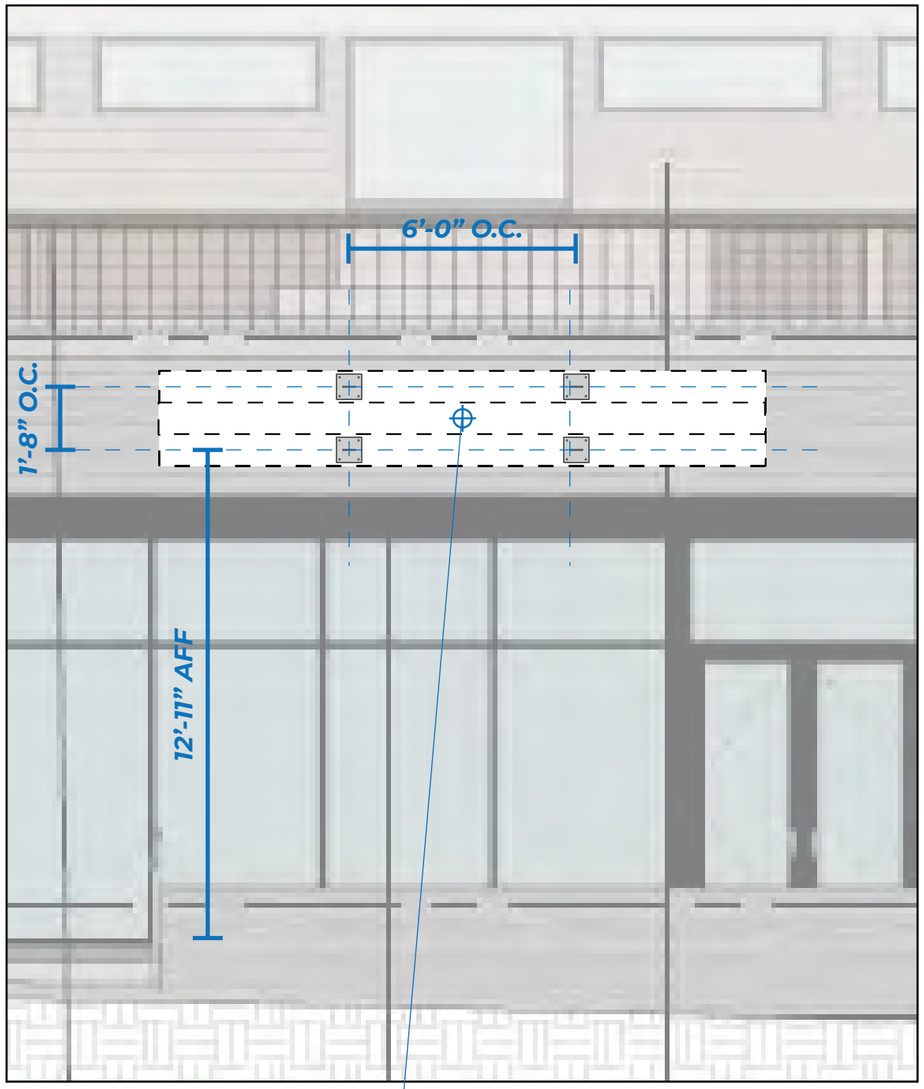

B3 West Elevation
Scale: 1/4" = 1'-0"

Primary Electrical Location
Client to provide 20 Amp / 120 Volt dedicated circuit to sign location

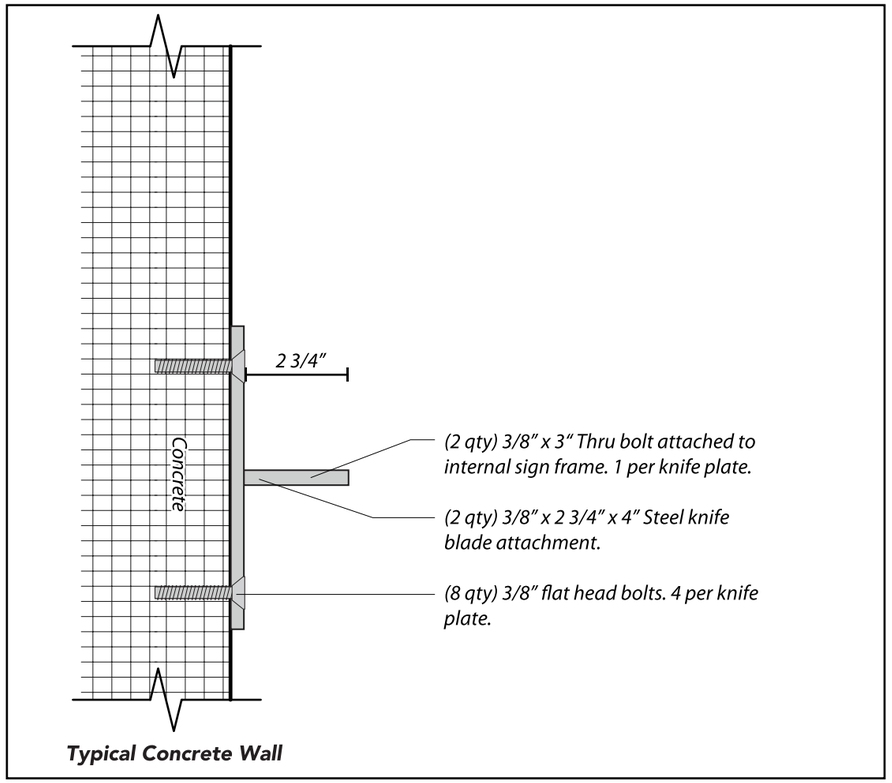

Knife Plate Install Detail
Scale: 3"=1'-0"

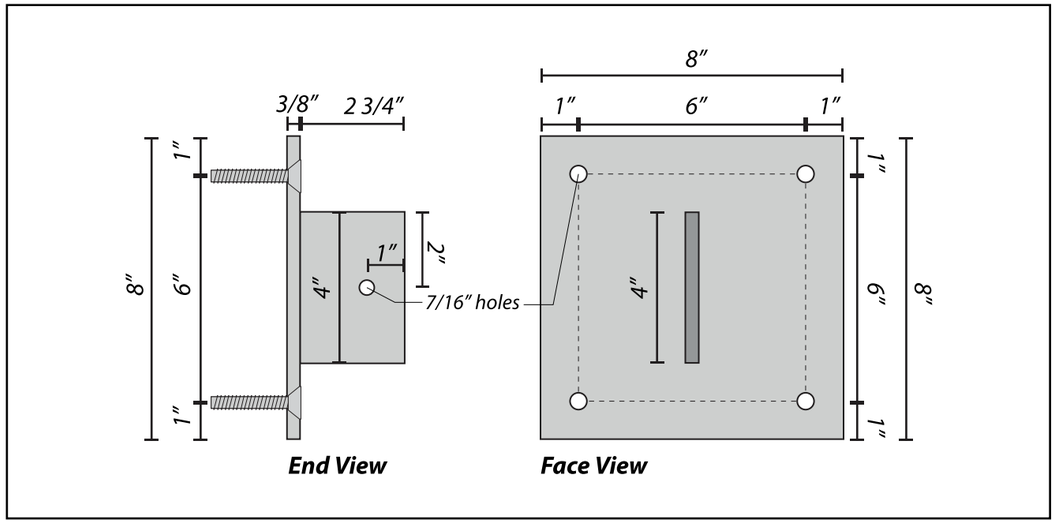

3/8" x 8" x 8" Steel Plate Detail
Scale: 3"=1'-0"

A DESIGN STUDIO

MAIN CONTACT
Gracia Mueller
360.929.3077

CREATIVE
Brody Lund
425.359.7380

Additional information:
adesignstudioseattle.com

Follow us on social:
@adesignstudioseattle

COPYRIGHT
All artwork contained herein is the copyrighted property of A Design Studio Seattle. This includes, but is not limited to, logos, specifications, artwork and engineering. Any usage beyond internal reviews shall require our appoval and a separate design fee paid to A Design Studio Seattle. Usage rights can also be purchased (limited or complete) for an additional fee. Any unlawful distribution of said artwork is a violation of federal copyright laws.

PROJECT NAME
Terrace Station

PROJECT #
20-004

ADDRESS
23905 Van Ry Blvd
Mountlake Terrace, WA 98043

DATE
12/10/20

VERSION NOTES

V1
V2
V3
V4
V5
V6
V7
V8
V9
V10
V11
V12
V13
V14
V15

PAGE SCALE
1/4" = 1'-0"

PAGE #

B3-S54 - ELEVATION

Sign Area: 6.0 Square Feet

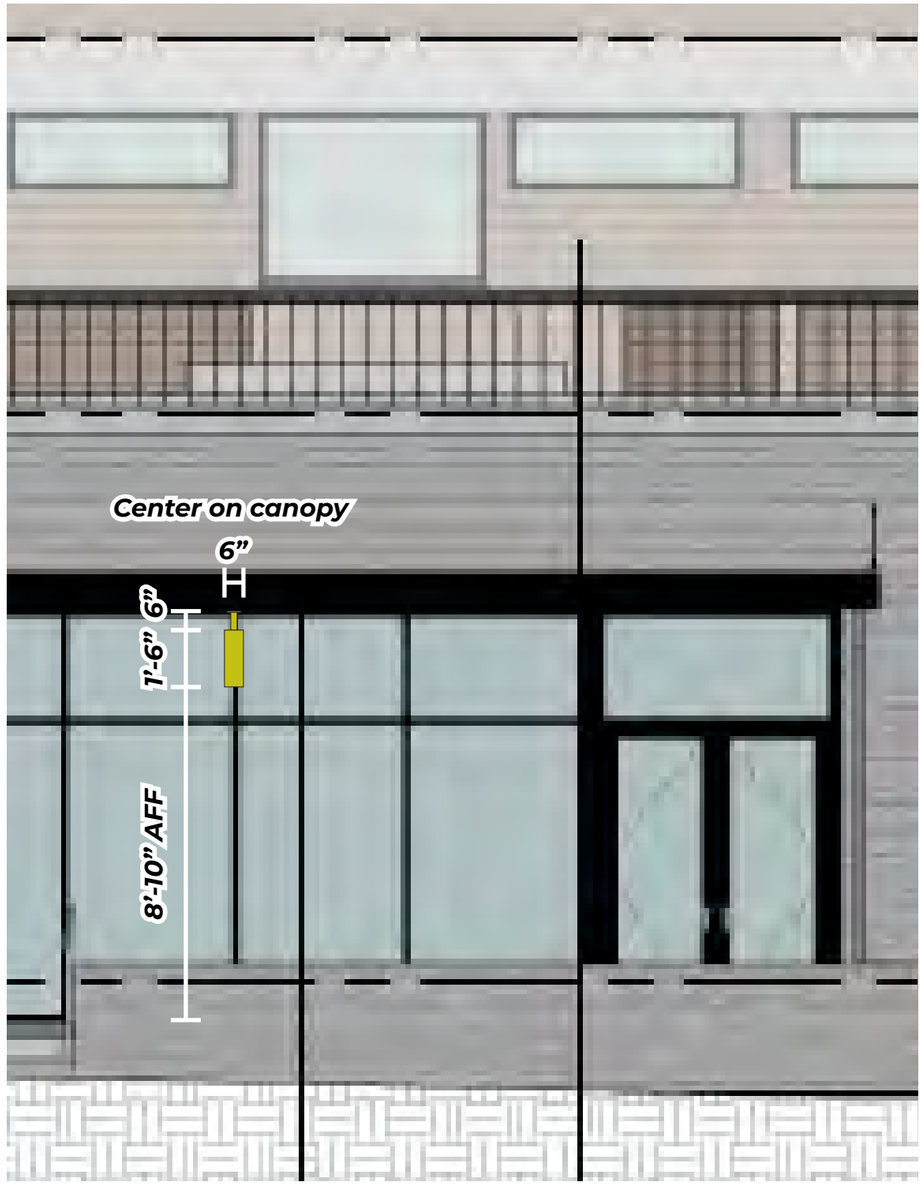

B3 West Elevation

B3 North Elevation

A DESIGN STUDIO

MAIN CONTACT
Gracia Mueller
360.929.3077

CREATIVE
Brody Lund
425.359.7380

Additional information:
adesignstudioseattle.com

Follow us on social:
@adesignstudioseattle

COPYRIGHT
All artwork contained herein is the copyrighted property of A Design Studio Seattle. This includes, but is not limited to, logos, specifications, artwork and engineering. Any usage beyond internal reviews shall require our appoval and a separate design fee paid to A Design Studio Seattle. Usage rights can also be purchased (limited or complete) for an additional fee. Any unlawful distribution of said artwork is a violation of federal copyright laws.

PROJECT NAME
Terrace Station

PROJECT #
20-004

ADDRESS
23905 Van Ry Blvd
Mountlake Terrace, WA 98043

DATE
12/10/20

VERSION NOTES

V1
V2
V3
V4
V5
V6
V7
V8
V9
V10
V11
V12
V13
V14
V15

PAGE SCALE
1/4” = 1’-0”

PAGE #

B3-S54 - ATTACHMENT DETAILS

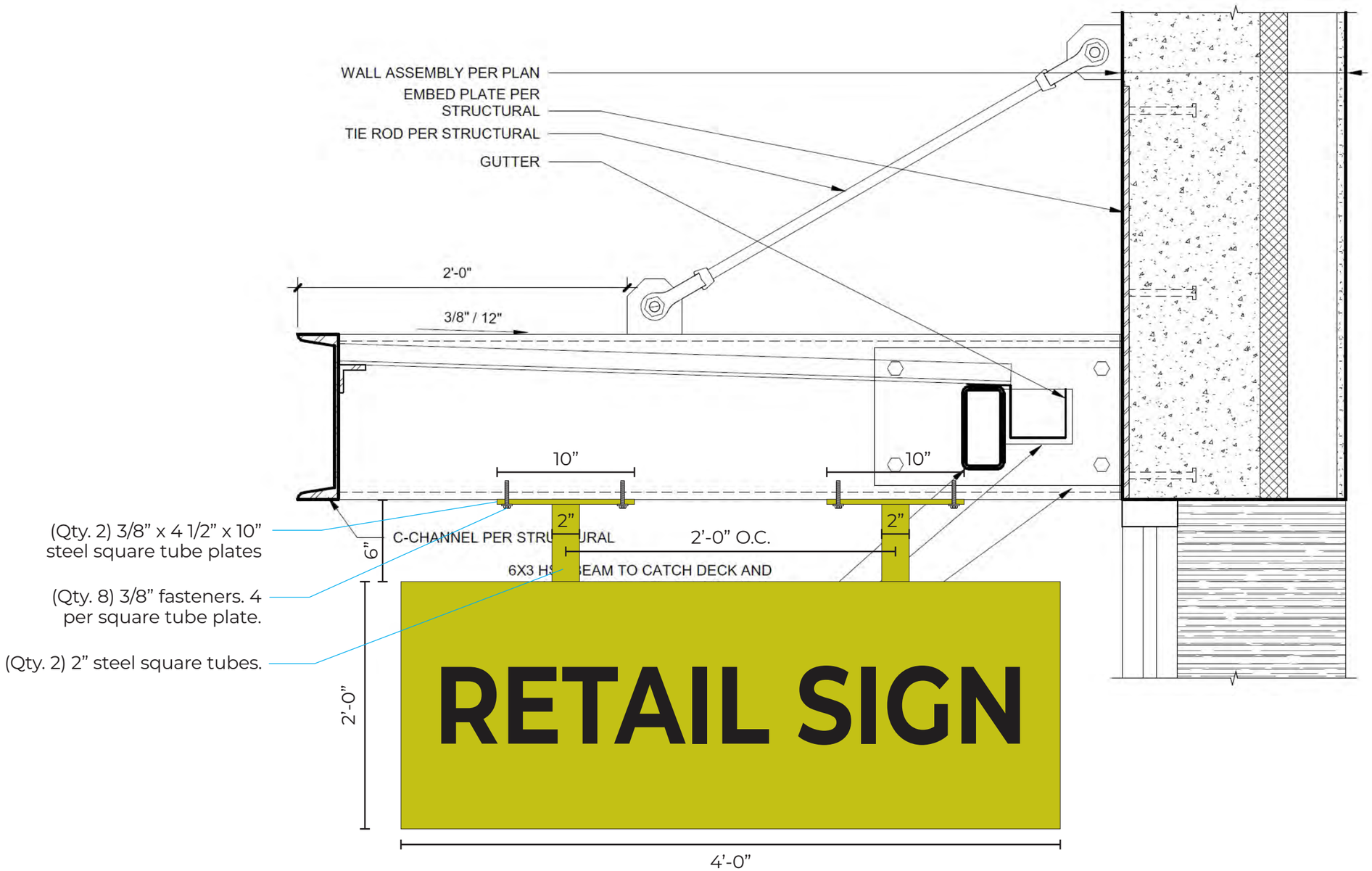

Center within canopy

A DESIGN STUDIO

MAIN CONTACT
Gracia Mueller
360.929.3077

CREATIVE
Brody Lund
425.359.7380

Additional information:
adesignstudioseattle.com

Follow us on social:
@adesignstudioseattle

COPYRIGHT
All artwork contained herein is the copyrighted property of A Design Studio Seattle. This includes, but is not limited to, logos, specifications, artwork and engineering. Any usage beyond internal reviews shall require our appoval and a separate design fee paid to A Design Studio Seattle. Usage rights can also be purchased (limited or complete) for an additional fee. Any unlawful distribution of said artwork is a violation of federal copyright laws.

PROJECT NAME
Terrace Station

PROJECT #
20-004

ADDRESS
23905 Van Ry Blvd
Mountlake Terrace, WA 98043

DATE
12/10/20

VERSION NOTES

V1
V2
V3
V4
V5
V6
V7
V8
V9
V10
V11
V12
V13
V14
V15

PAGE SCALE
1 1/2" = 1'-0"

PAGE #
168

B3-S55 - ELEVATION

Sign Area: 40.0 Square Feet

B3 West Elevation

A DESIGN STUDIO

MAIN CONTACT
Gracia Mueller
360.929.3077

CREATIVE
Brody Lund
425.359.7380

Additional information:
adesignstudioseattle.com

Follow us on social:
@adesignstudioseattle

COPYRIGHT
All artwork contained herein is the copyrighted property of A Design Studio Seattle. This includes, but is not limited to, logos, specifications, artwork and engineering. Any usage beyond internal reviews shall require our appoval and a separate design fee paid to A Design Studio Seattle. Usage rights can also be purchased (limited or complete) for an additional fee. Any unlawful distribution of said artwork is a violation of federal copyright laws.

PROJECT NAME
Terrace Station

PROJECT #
20-004

ADDRESS
23905 Van Ry Blvd
Mountlake Terrace, WA 98043

DATE
12/10/20

VERSION NOTES

V1
V2
V3
V4
V5
V6
V7
V8
V9
V10
V11
V12
V13
V14
V15

PAGE SCALE
1/4" = 1'-0"

B3-S55 - ATTACHMENT DETAILS

Sign Area: 40.0 Square Feet

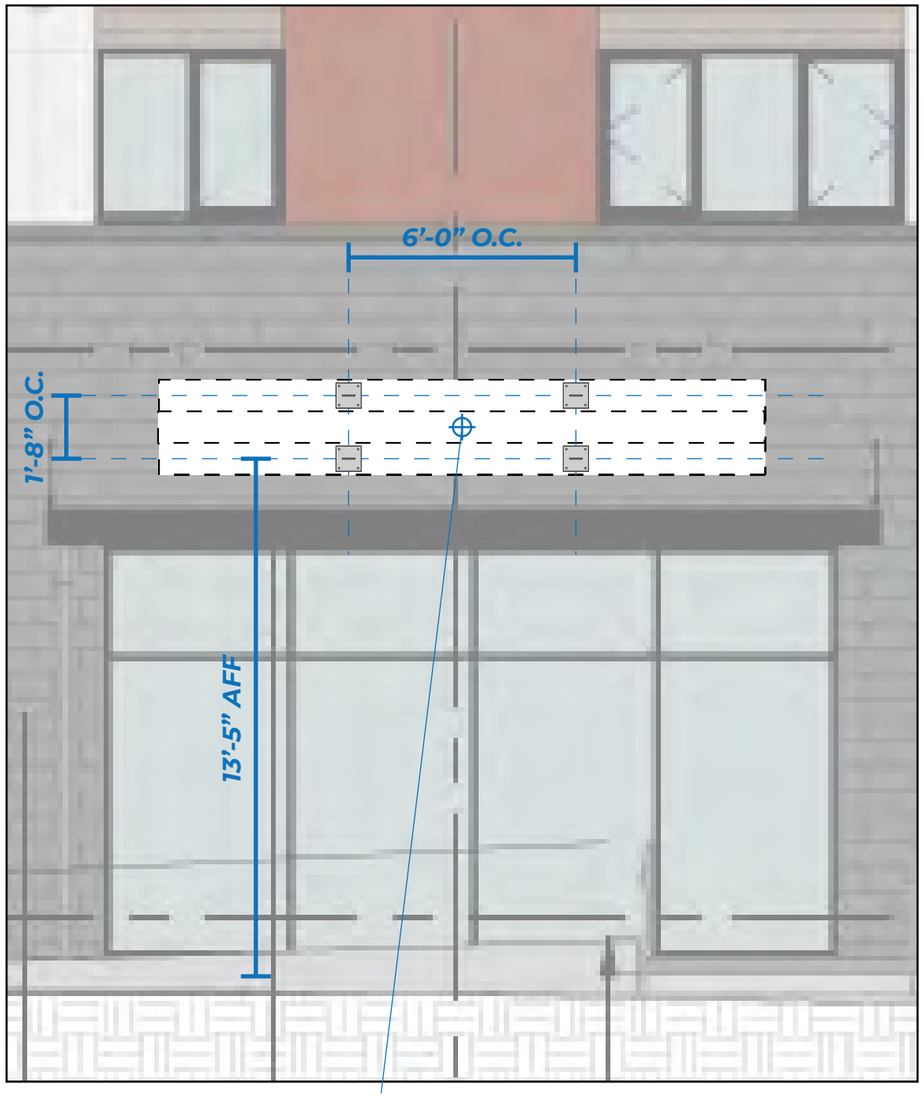

B3 West Elevation
Scale: 1/4" = 1'-0"

Primary Electrical Location
Client to provide 20 Amp / 120 Volt dedicated circuit to sign location

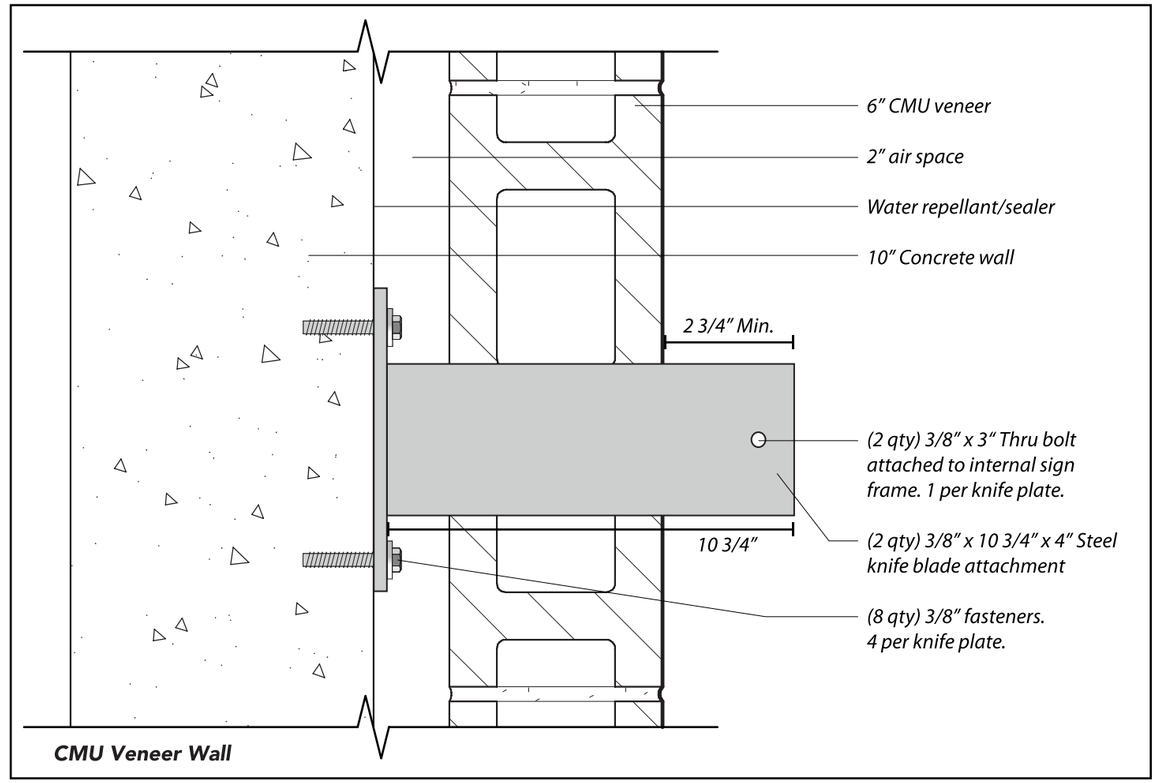

Knife Plate Install Detail
Scale: 3"=1'-0"

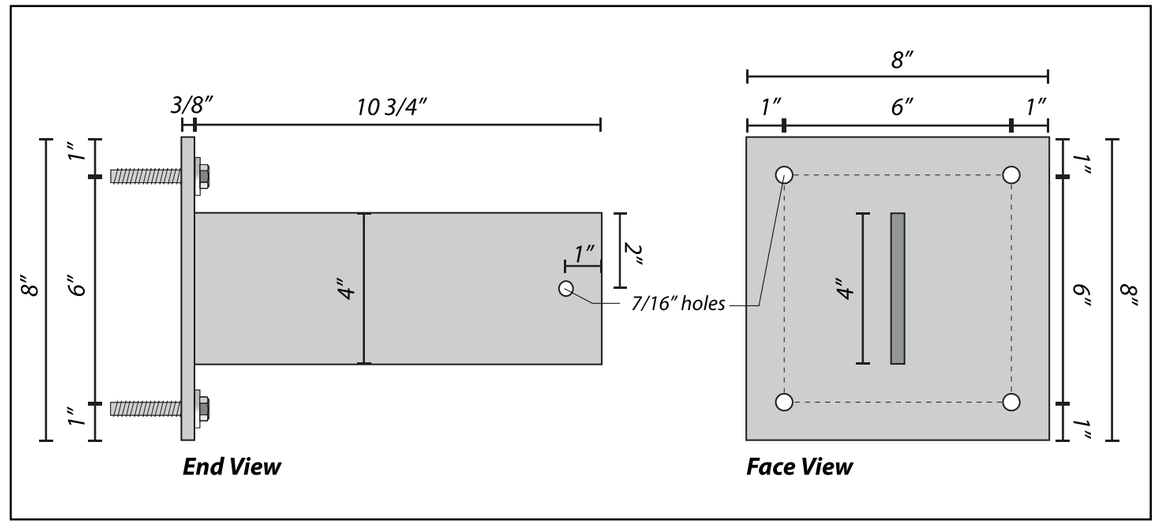

3/8" x 8" x 8" Steel Plate Detail
Scale: 3"=1'-0"

A DESIGN STUDIO

MAIN CONTACT
Gracia Mueller
360.929.3077

CREATIVE
Brody Lund
425.359.7380

Additional information:
adesignstudioseattle.com

Follow us on social:
@adesignstudioseattle

COPYRIGHT
All artwork contained herein is the copyrighted property of A Design Studio Seattle. This includes, but is not limited to, logos, specifications, artwork and engineering. Any usage beyond internal reviews shall require our appoval and a separate design fee paid to A Design Studio Seattle. Usage rights can also be purchased (limited or complete) for an additional fee. Any unlawful distribution of said artwork is a violation of federal copyright laws.

PROJECT NAME
Terrace Station

PROJECT #
20-004

ADDRESS
23905 Van Ry Blvd
Mountlake Terrace, WA 98043

DATE
12/10/20

VERSION NOTES

V1
V2
V3
V4
V5
V6
V7
V8
V9
V10
V11
V12
V13
V14
V15

PAGE SCALE
1/4" = 1'-0"

B3-S56 - ELEVATION

Sign Area: 6.0 Square Feet

B3 West Elevation

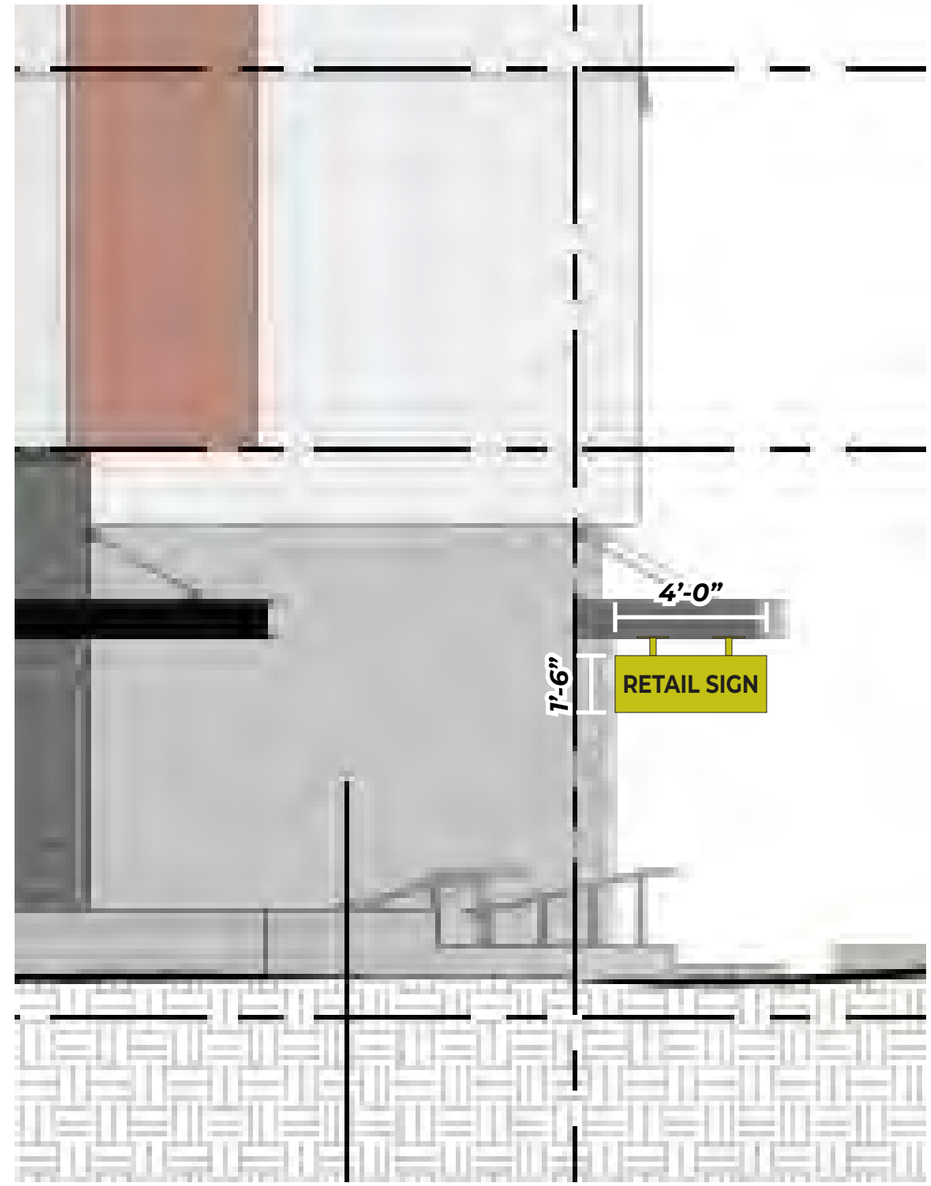

B3 North Elevation

A DESIGN STUDIO

MAIN CONTACT
Gracia Mueller
360.929.3077

CREATIVE
Brody Lund
425.359.7380

Additional information:
adesignstudioseattle.com

Follow us on social:
@adesignstudioseattle

COPYRIGHT
All artwork contained herein is the copyrighted property of A Design Studio Seattle. This includes, but is not limited to, logos, specifications, artwork and engineering. Any usage beyond internal reviews shall require our appoval and a separate design fee paid to A Design Studio Seattle. Usage rights can also be purchased (limited or complete) for an additional fee. Any unlawful distribution of said artwork is a violation of federal copyright laws.

PROJECT NAME
Terrace Station

PROJECT #
20-004

ADDRESS
23905 Van Ry Blvd
Mountlake Terrace, WA 98043

DATE
12/10/20

VERSION NOTES

V1
V2
V3
V4
V5
V6
V7
V8
V9
V10
V11
V12
V13
V14
V15

PAGE SCALE
1/4” = 1’-0”

PAGE #

B3-S56 - ATTACHMENT DETAILS

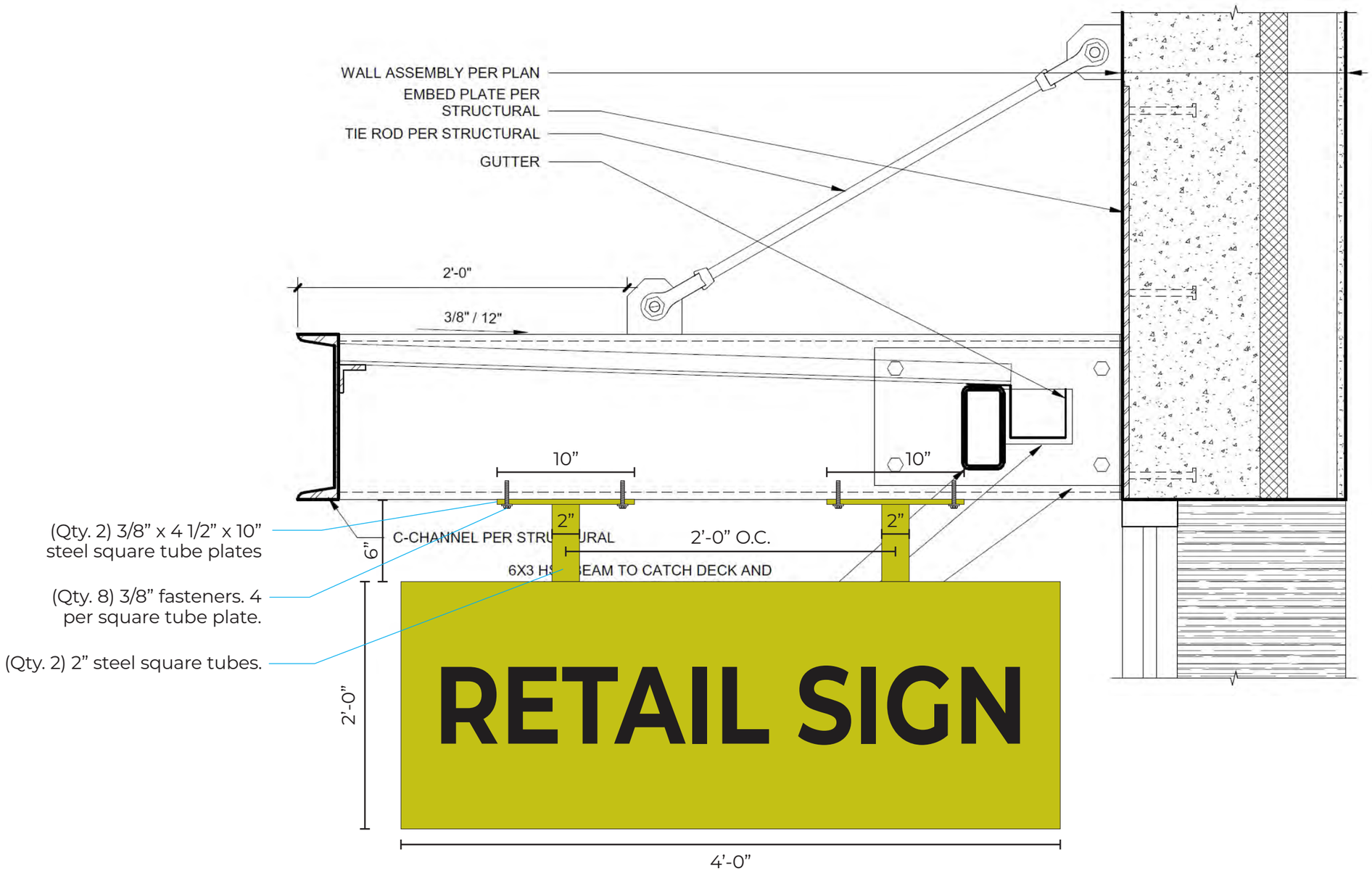

Center within canopy

A DESIGN STUDIO

MAIN CONTACT
Gracia Mueller
360.929.3077

CREATIVE
Brody Lund
425.359.7380

Additional information:
adesignstudioseattle.com

Follow us on social:
@adesignstudioseattle

COPYRIGHT
All artwork contained herein is the copyrighted property of A Design Studio Seattle. This includes, but is not limited to, logos, specifications, artwork and engineering. Any usage beyond internal reviews shall require our appoval and a separate design fee paid to A Design Studio Seattle. Usage rights can also be purchased (limited or complete) for an additional fee. Any unlawful distribution of said artwork is a violation of federal copyright laws.

PROJECT NAME
Terrace Station

PROJECT #
20-004

ADDRESS
23905 Van Ry Blvd
Mountlake Terrace, WA 98043

DATE
12/10/20

VERSION NOTES

V1
V2
V3
V4
V5
V6
V7
V8
V9
V10
V11
V12
V13
V14
V15

PAGE SCALE
1/4" = 1'-0"

PAGE #

B3-S57 - ELEVATION

Sign Area: 40.0 Square Feet

B3 West Elevation

A DESIGN STUDIO

MAIN CONTACT
Gracia Mueller
360.929.3077

CREATIVE
Brody Lund
425.359.7380

Additional information:
adesignstudioseattle.com

Follow us on social:
@adesignstudioseattle

COPYRIGHT
All artwork contained herein is the copyrighted property of A Design Studio Seattle. This includes, but is not limited to, logos, specifications, artwork and engineering. Any usage beyond internal reviews shall require our appoval and a separate design fee paid to A Design Studio Seattle. Usage rights can also be purchased (limited or complete) for an additional fee. Any unlawful distribution of said artwork is a violation of federal copyright laws.

PROJECT NAME
Terrace Station

PROJECT #
20-004

ADDRESS
23905 Van Ry Blvd
Mountlake Terrace, WA 98043

DATE
12/10/20

VERSION NOTES

V1
V2
V3
V4
V5
V6
V7
V8
V9
V10
V11
V12
V13
V14
V15

PAGE SCALE
1/4" = 1'-0"

PAGE #
173

B3-S57 - ATTACHMENT DETAILS

Sign Area: 40.0 Square Feet

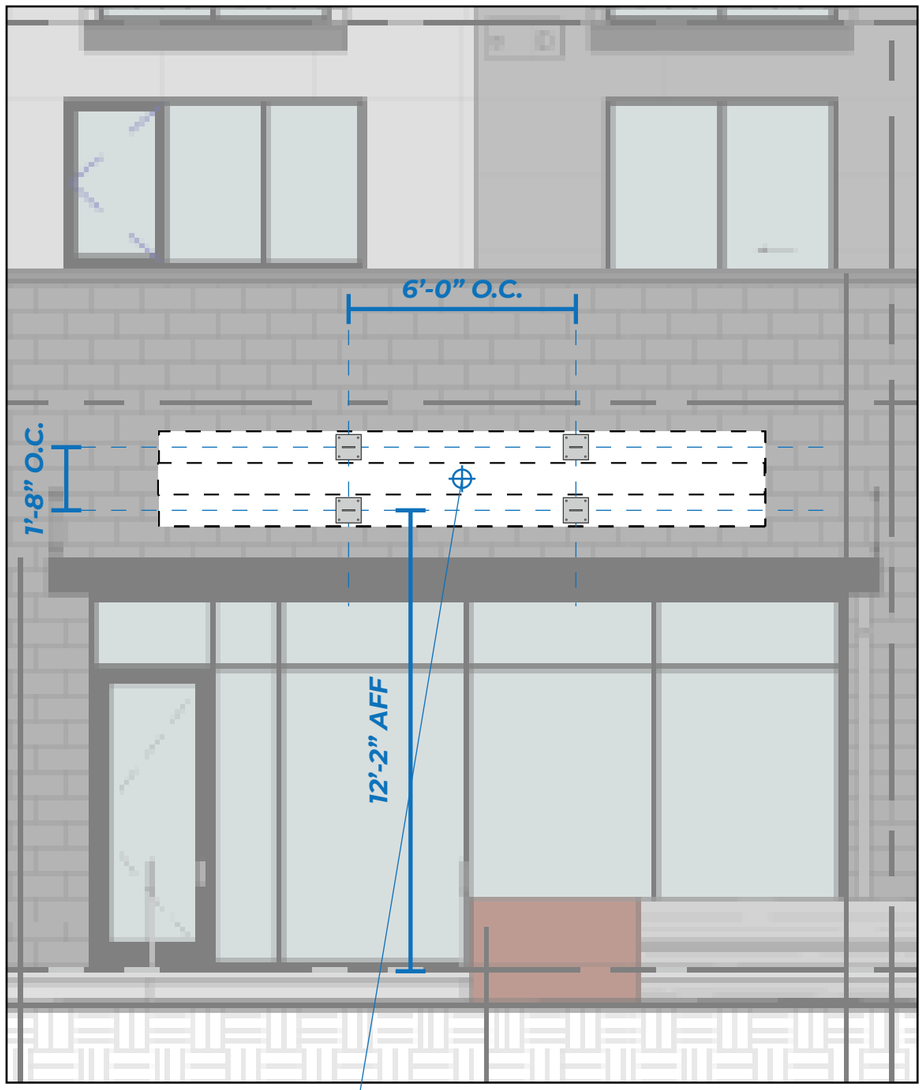

B3 West Elevation
Scale: 1/4" = 1'-0"

Primary Electrical Location
Client to provide 20 Amp / 120 Volt dedicated circuit to sign location

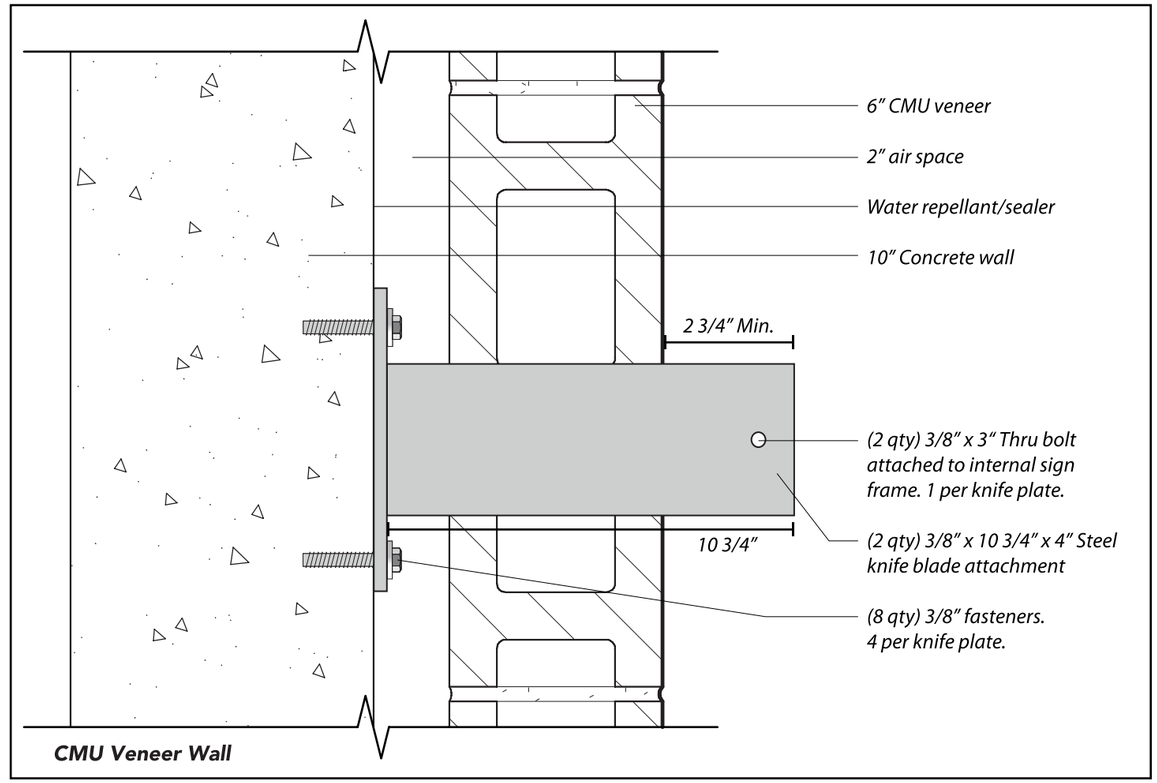

Knife Plate Install Detail
Scale: 3"=1'-0"

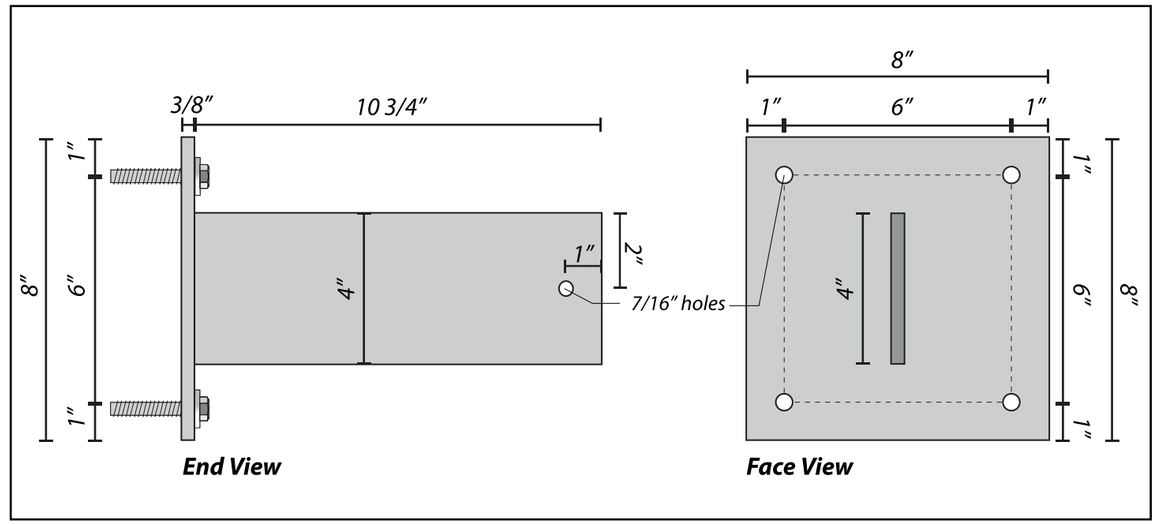

3/8" x 8" x 8" Steel Plate Detail
Scale: 3"=1'-0"

A DESIGN STUDIO

MAIN CONTACT
Gracia Mueller
360.929.3077

CREATIVE
Brody Lund
425.359.7380

Additional information:
adesignstudioseattle.com

Follow us on social:
@adesignstudioseattle

COPYRIGHT
All artwork contained herein is the copyrighted property of A Design Studio Seattle. This includes, but is not limited to, logos, specifications, artwork and engineering. Any usage beyond internal reviews shall require our appoval and a separate design fee paid to A Design Studio Seattle. Usage rights can also be purchased (limited or complete) for an additional fee. Any unlawful distribution of said artwork is a violation of federal copyright laws.

PROJECT NAME
Terrace Station

PROJECT #
20-004

ADDRESS
23905 Van Ry Blvd
Mountlake Terrace, WA 98043

DATE
12/10/20

VERSION NOTES

V1
V2
V3
V4
V5
V6
V7
V8
V9
V10
V11
V12
V13
V14
V15

PAGE SCALE
1/4" = 1'-0"

PAGE #
174

B3-S58 - ELEVATION

Sign Area: 6.0 Square Feet

B3 West Elevation

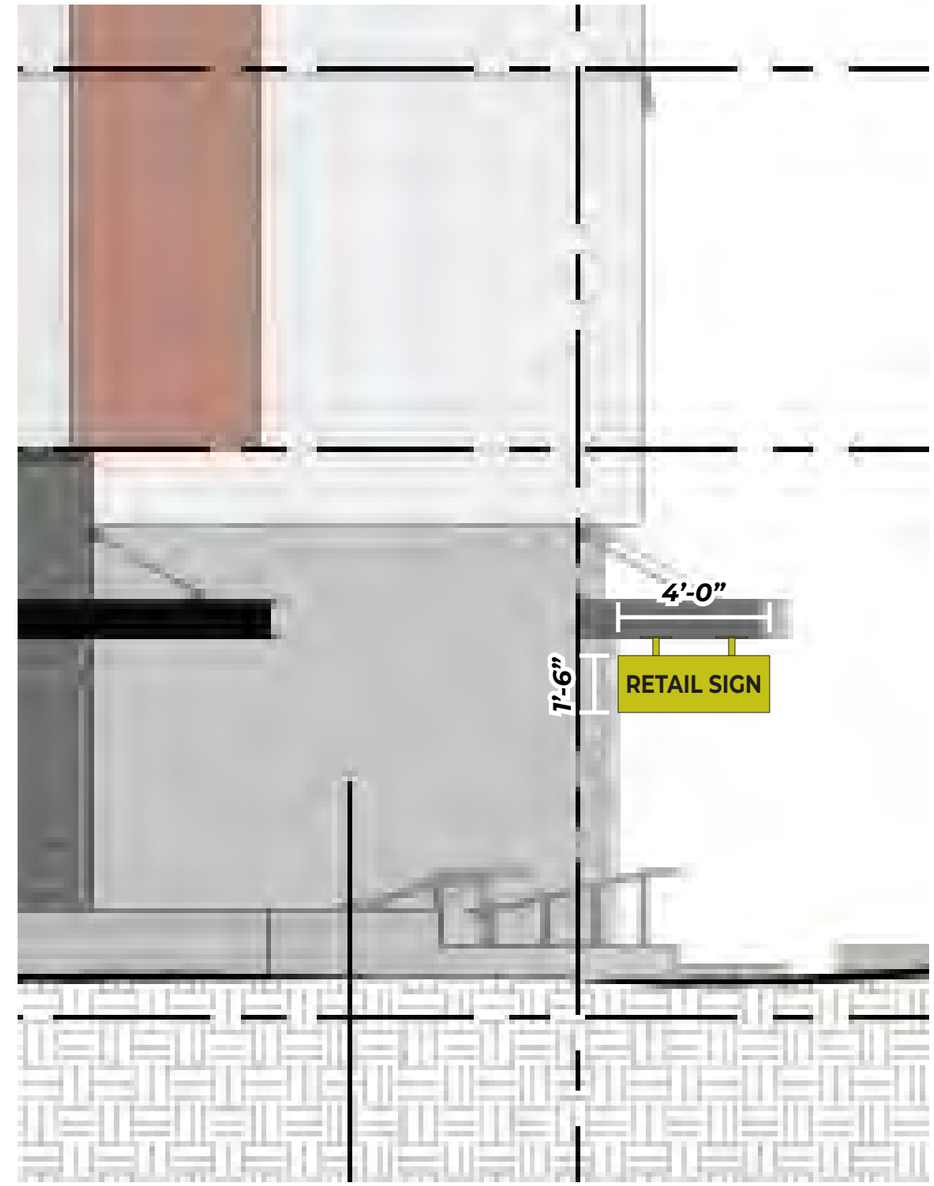

B3 North Elevation

A DESIGN STUDIO

MAIN CONTACT
Gracia Mueller
360.929.3077

CREATIVE
Brody Lund
425.359.7380

Additional information:
adesignstudioseattle.com

Follow us on social:
@adesignstudioseattle

COPYRIGHT
All artwork contained herein is the copyrighted property of A Design Studio Seattle. This includes, but is not limited to, logos, specifications, artwork and engineering. Any usage beyond internal reviews shall require our appoval and a separate design fee paid to A Design Studio Seattle. Usage rights can also be purchased (limited or complete) for an additional fee. Any unlawful distribution of said artwork is a violation of federal copyright laws.

PROJECT NAME
Terrace Station

PROJECT #
20-004

ADDRESS
23905 Van Ry Blvd
Mountlake Terrace, WA 98043

DATE
12/10/20

VERSION NOTES

V1
V2
V3
V4
V5
V6
V7
V8
V9
V10
V11
V12
V13
V14
V15

PAGE SCALE
1/4” = 1’-0”

PAGE #

B3-S58 - ATTACHMENT DETAILS

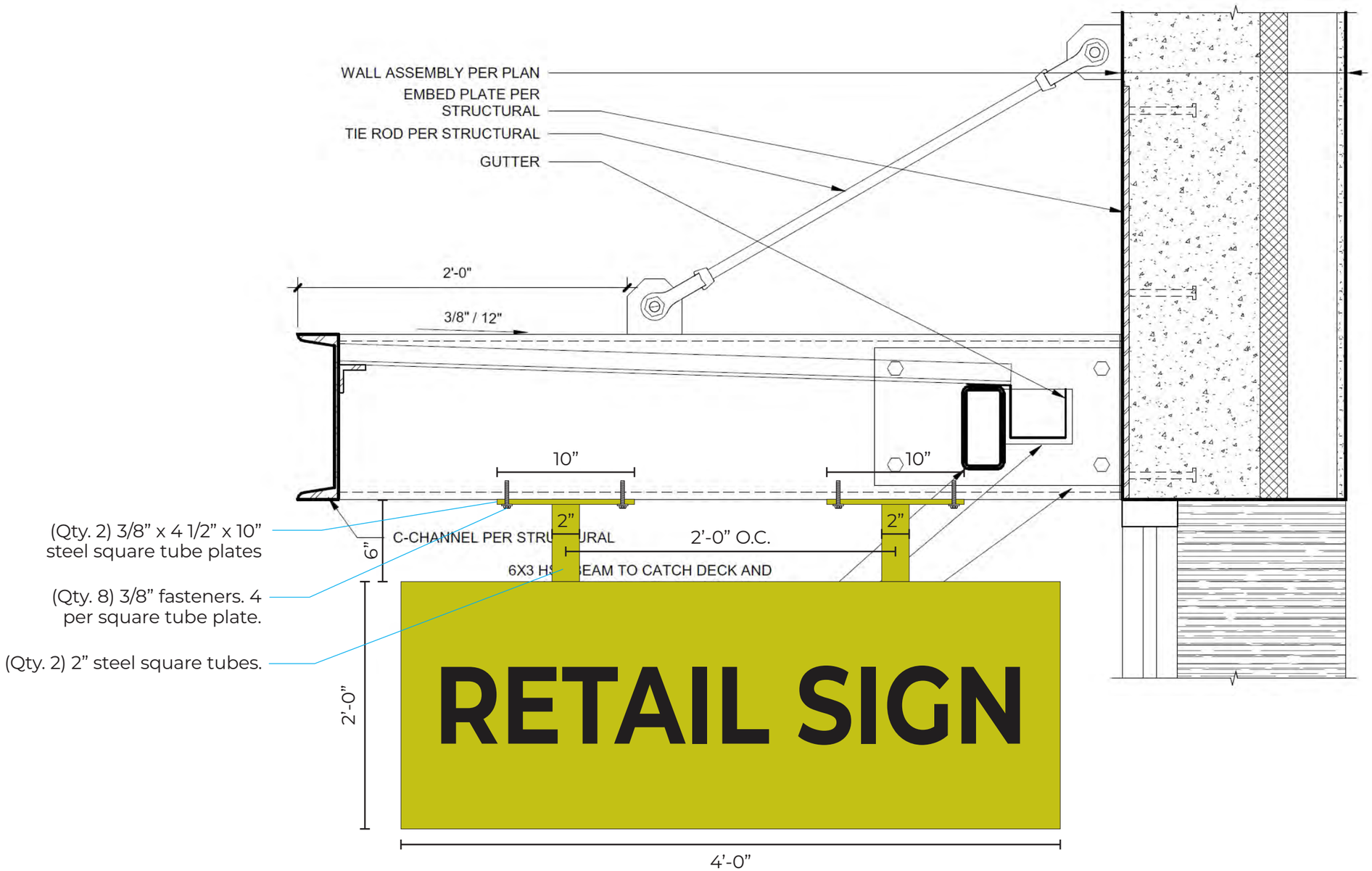

Center within canopy

A DESIGN STUDIO

MAIN CONTACT
Gracia Mueller
360.929.3077

CREATIVE
Brody Lund
425.359.7380

Additional information:
adesignstudioseattle.com

Follow us on social:
@adesignstudioseattle

COPYRIGHT
All artwork contained herein is the copyrighted property of A Design Studio Seattle. This includes, but is not limited to, logos, specifications, artwork and engineering. Any usage beyond internal reviews shall require our appoval and a separate design fee paid to A Design Studio Seattle. Usage rights can also be purchased (limited or complete) for an additional fee. Any unlawful distribution of said artwork is a violation of federal copyright laws.

PROJECT NAME
Terrace Station

PROJECT #
20-004

ADDRESS
23905 Van Ry Blvd
Mountlake Terrace, WA 98043

DATE
12/10/20

VERSION NOTES

V1
V2
V3
V4
V5
V6
V7
V8
V9
V10
V11
V12
V13
V14
V15

PAGE SCALE
1 1/2" = 1'-0"

PAGE #

B3-S59 - ELEVATION

Sign Area: 40.0 Square Feet

B3 West Elevation

A DESIGN STUDIO

MAIN CONTACT
Gracia Mueller
360.929.3077

CREATIVE
Brody Lund
425.359.7380

Additional information:
adesignstudioseattle.com

Follow us on social:
@adesignstudioseattle

COPYRIGHT
All artwork contained herein is the copyrighted property of A Design Studio Seattle. This includes, but is not limited to, logos, specifications, artwork and engineering. Any usage beyond internal reviews shall require our appoval and a separate design fee paid to A Design Studio Seattle. Usage rights can also be purchased (limited or complete) for an additional fee. Any unlawful distribution of said artwork is a violation of federal copyright laws.

PROJECT NAME
Terrace Station

PROJECT #
20-004

ADDRESS
23905 Van Ry Blvd
Mountlake Terrace, WA 98043

DATE
12/10/20

VERSION NOTES

V1
V2
V3
V4
V5
V6
V7
V8
V9
V10
V11
V12
V13
V14
V15

PAGE SCALE
1/4" = 1'-0"

PAGE #

B3-S59 - ATTACHMENT DETAILS

Sign Area: 40.0 Square Feet

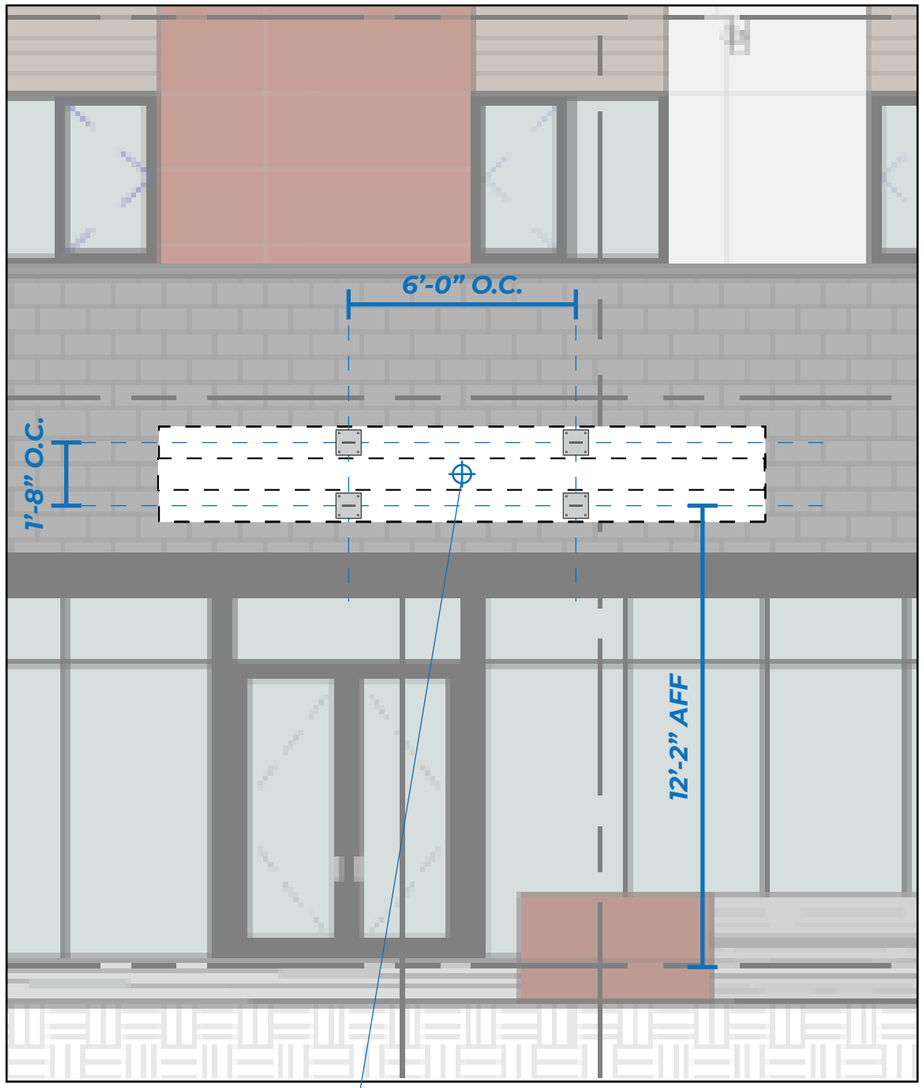

B3 West Elevation
Scale: 1/4" = 1'-0"

Primary Electrical Location
Client to provide 20 Amp / 120 Volt dedicated circuit to sign location

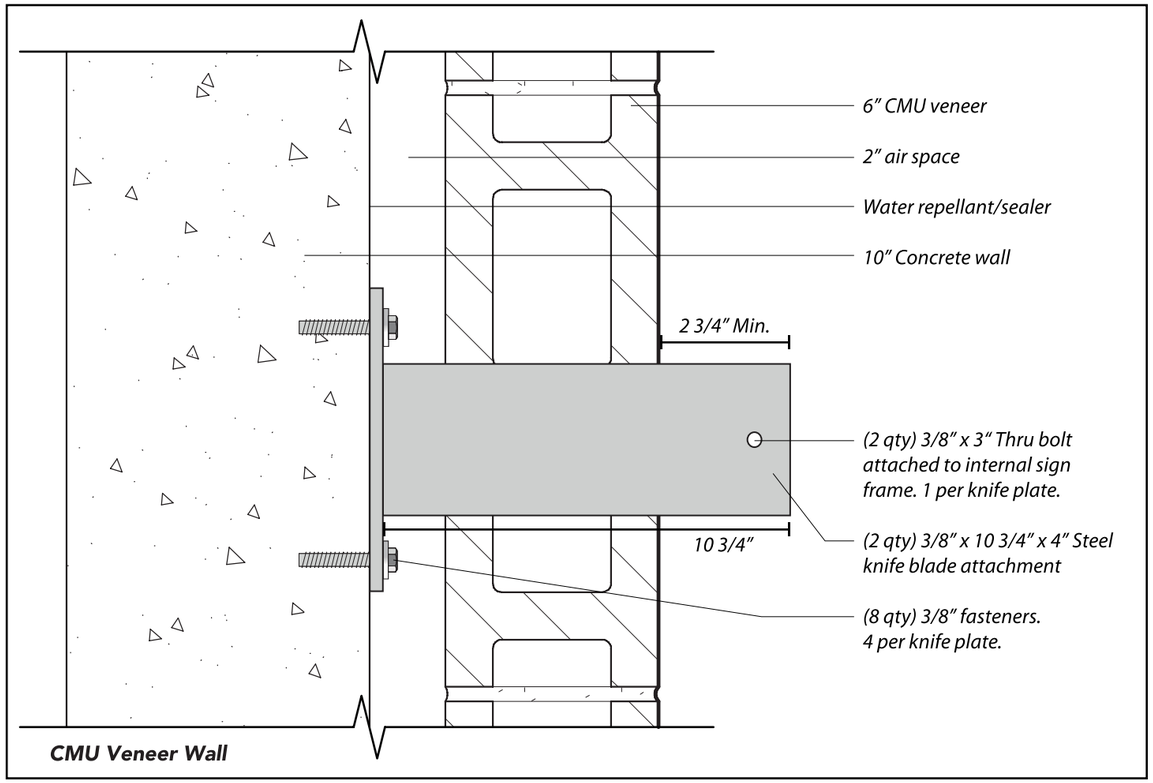

Knife Plate Install Detail
Scale: 3"=1'-0"

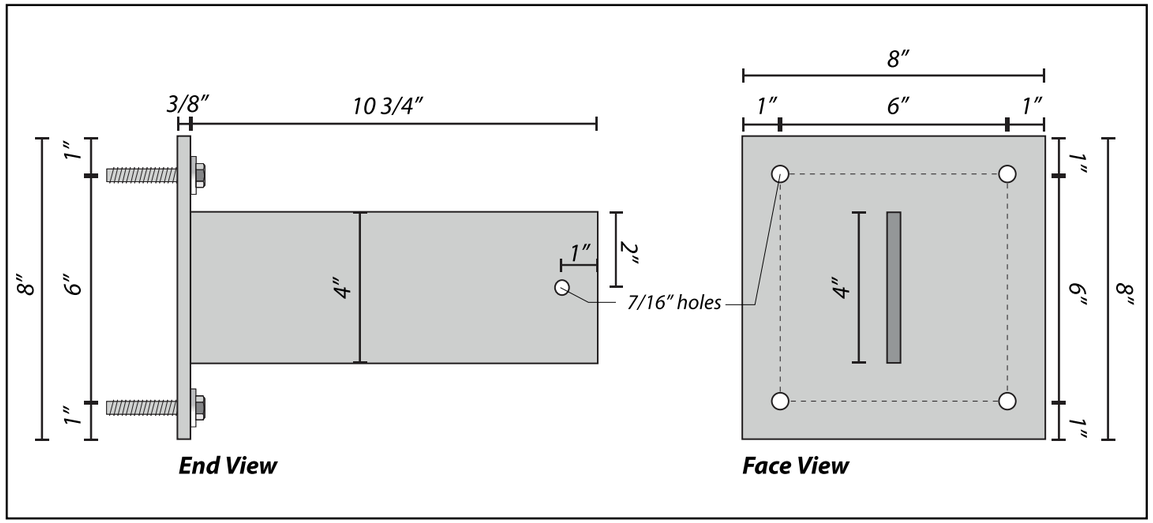

3/8" x 8" x 8" Steel Plate Detail
Scale: 3"=1'-0"

A DESIGN STUDIO

MAIN CONTACT
Gracia Mueller
360.929.3077

CREATIVE
Brody Lund
425.359.7380

Additional information:
adesignstudioseattle.com

Follow us on social:
@adesignstudioseattle

COPYRIGHT
All artwork contained herein is the copyrighted property of A Design Studio Seattle. This includes, but is not limited to, logos, specifications, artwork and engineering. Any usage beyond internal reviews shall require our appoval and a separate design fee paid to A Design Studio Seattle. Usage rights can also be purchased (limited or complete) for an additional fee. Any unlawful distribution of said artwork is a violation of federal copyright laws.

PROJECT NAME
Terrace Station

PROJECT #
20-004

ADDRESS
23905 Van Ry Blvd
Mountlake Terrace, WA 98043

DATE
12/10/20

VERSION NOTES

V1
V2
V3
V4
V5
V6
V7
V8
V9
V10
V11
V12
V13
V14
V15

PAGE SCALE
1/4" = 1'-0"

PAGE #

B3-S60 - ELEVATION

Sign Area: 6.0 Square Feet

B3 West Elevation

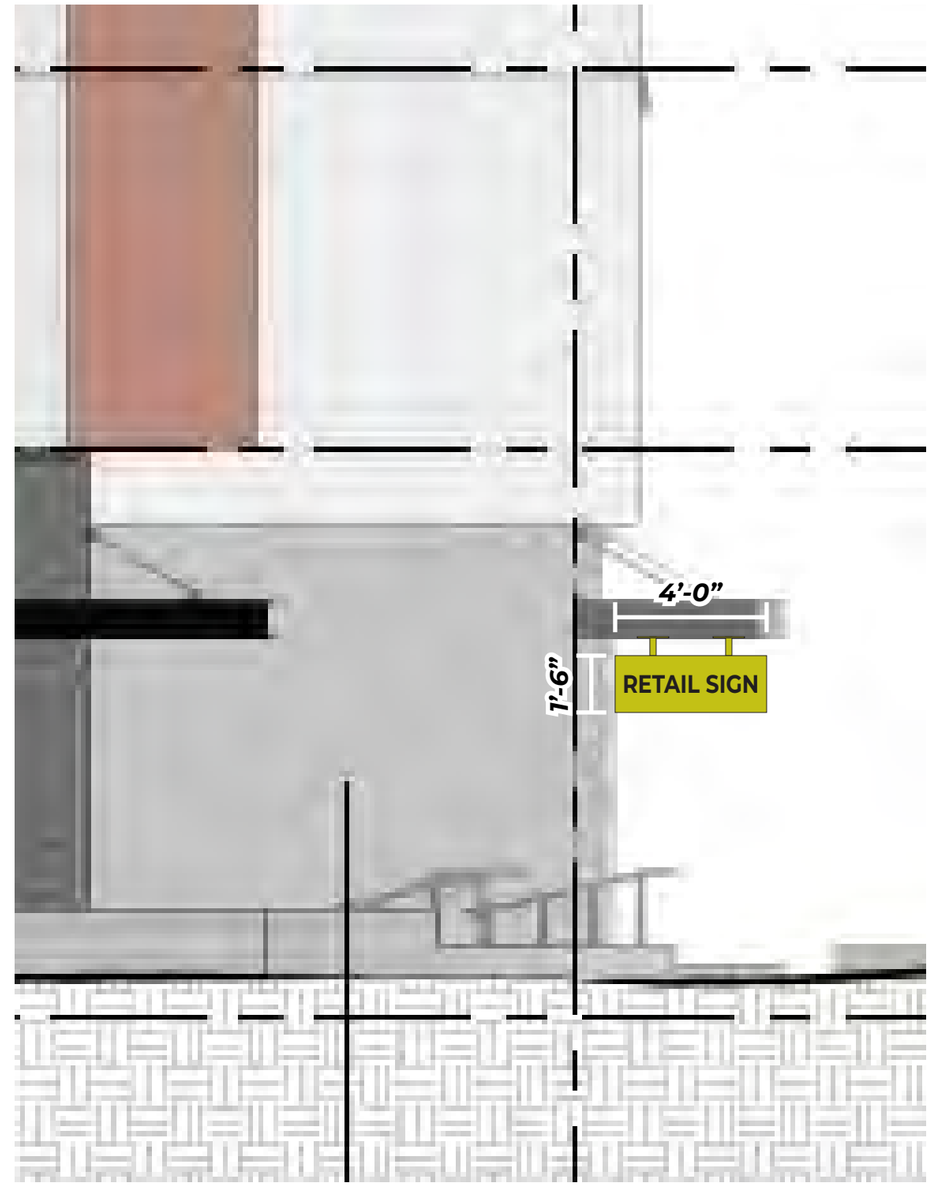

B3 North Elevation

A DESIGN STUDIO

MAIN CONTACT
Gracia Mueller
360.929.3077

CREATIVE
Brody Lund
425.359.7380

Additional information:
adesignstudioseattle.com

Follow us on social:
@adesignstudioseattle

COPYRIGHT
All artwork contained herein is the copyrighted property of A Design Studio Seattle. This includes, but is not limited to, logos, specifications, artwork and engineering. Any usage beyond internal reviews shall require our appoval and a separate design fee paid to A Design Studio Seattle. Usage rights can also be purchased (limited or complete) for an additional fee. Any unlawful distribution of said artwork is a violation of federal copyright laws.

PROJECT NAME
Terrace Station

PROJECT #
20-004

ADDRESS
23905 Van Ry Blvd
Mountlake Terrace, WA 98043

DATE
12/10/20

VERSION NOTES

V1
V2
V3
V4
V5
V6
V7
V8
V9
V10
V11
V12
V13
V14
V15

PAGE SCALE
1/4” = 1’-0”

PAGE #

B3-S60 - ATTACHMENT DETAILS

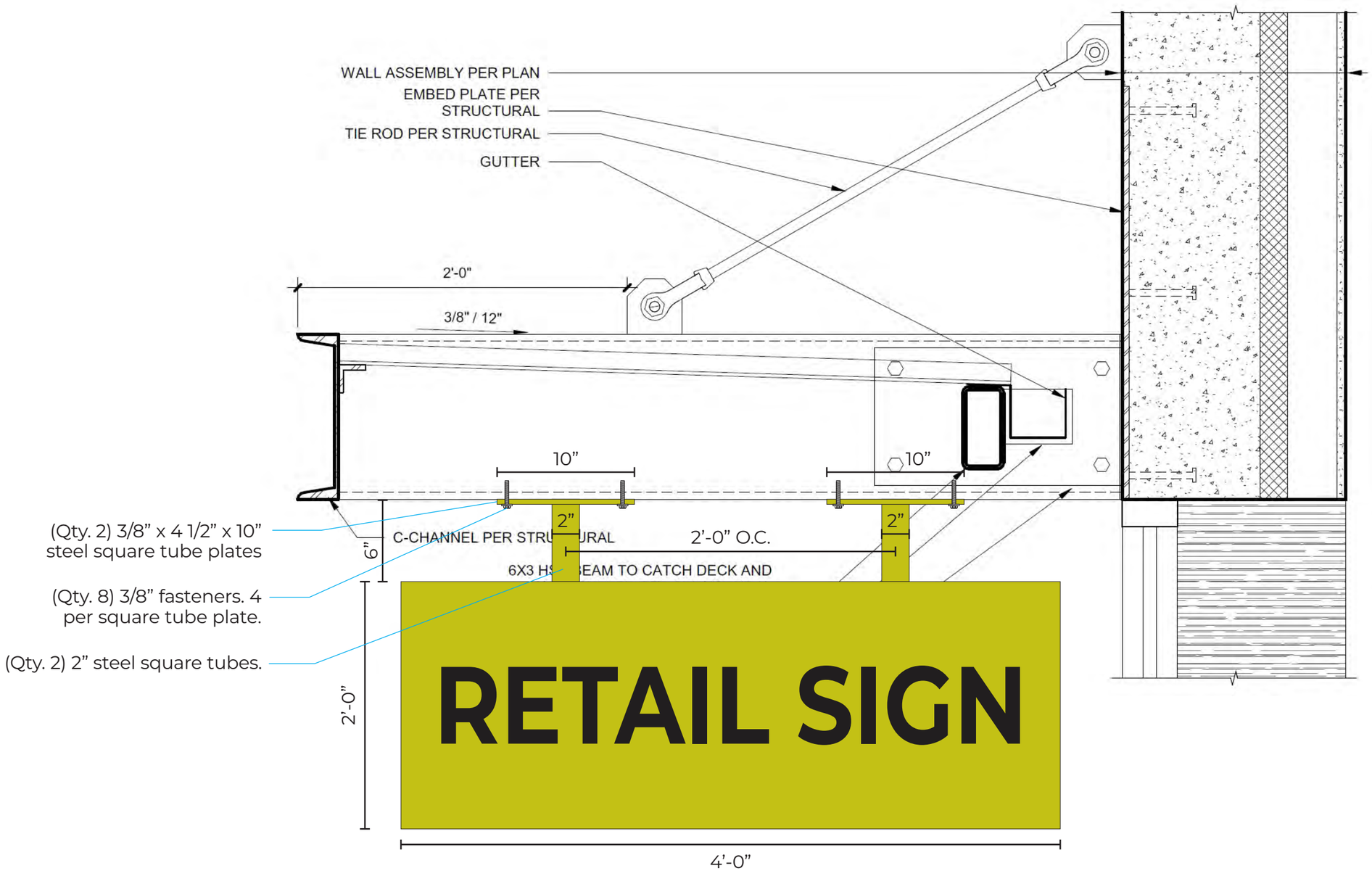

Center within canopy

A DESIGN STUDIO

MAIN CONTACT
Gracia Mueller
360.929.3077

CREATIVE
Brody Lund
425.359.7380

Additional information:
adesignstudioseattle.com

Follow us on social:
@adesignstudioseattle

COPYRIGHT
All artwork contained herein is the copyrighted property of A Design Studio Seattle. This includes, but is not limited to, logos, specifications, artwork and engineering. Any usage beyond internal reviews shall require our appoval and a separate design fee paid to A Design Studio Seattle. Usage rights can also be purchased (limited or complete) for an additional fee. Any unlawful distribution of said artwork is a violation of federal copyright laws.

PROJECT NAME
Terrace Station

PROJECT #
20-004

ADDRESS
23905 Van Ry Blvd
Mountlake Terrace, WA 98043

DATE
12/10/20

VERSION NOTES

V1
V2
V3
V4
V5
V6
V7
V8
V9
V10
V11
V12
V13
V14
V15

PAGE SCALE
1 1/2" = 1'-0"

PAGE #
180

B3-S61 - ELEVATION

Sign Area: 40.0 Square Feet

B3 West Elevation

A DESIGN STUDIO

MAIN CONTACT
Gracia Mueller
360.929.3077

CREATIVE
Brody Lund
425.359.7380

Additional information:
adesignstudioseattle.com

Follow us on social:
@adesignstudioseattle

COPYRIGHT
All artwork contained herein is the copyrighted property of A Design Studio Seattle. This includes, but is not limited to, logos, specifications, artwork and engineering. Any usage beyond internal reviews shall require our appoval and a separate design fee paid to A Design Studio Seattle. Usage rights can also be purchased (limited or complete) for an additional fee. Any unlawful distribution of said artwork is a violation of federal copyright laws.

PROJECT NAME
Terrace Station

PROJECT #
20-004

ADDRESS
23905 Van Ry Blvd
Mountlake Terrace, WA 98043

DATE
12/10/20

VERSION NOTES

V1
V2
V3
V4
V5
V6
V7
V8
V9
V10
V11
V12
V13
V14
V15

PAGE SCALE
1/4" = 1'-0"

PAGE #

B3-S61 - ATTACHMENT DETAILS

Sign Area: 40.0 Square Feet

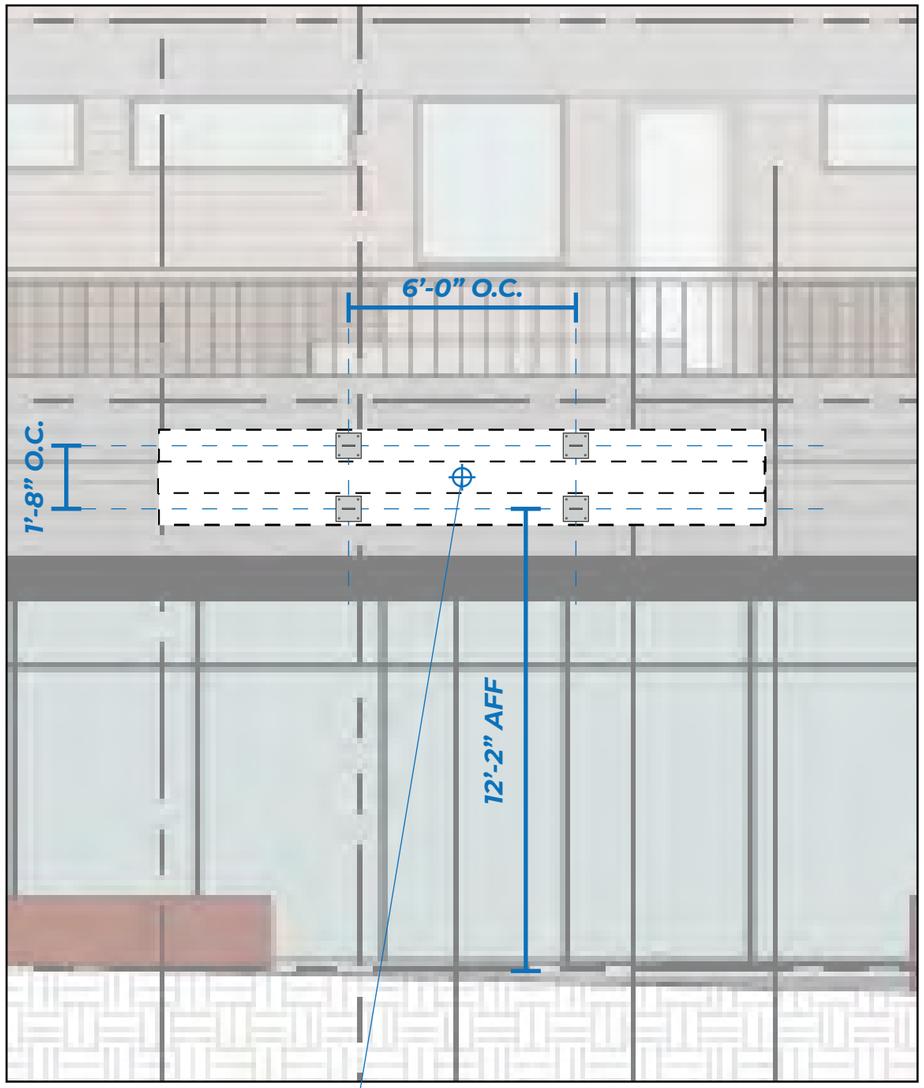

B3 West Elevation
Scale: 1/4" = 1'-0"

Primary Electrical Location
Client to provide 20 Amp / 120 Volt dedicated circuit to sign location

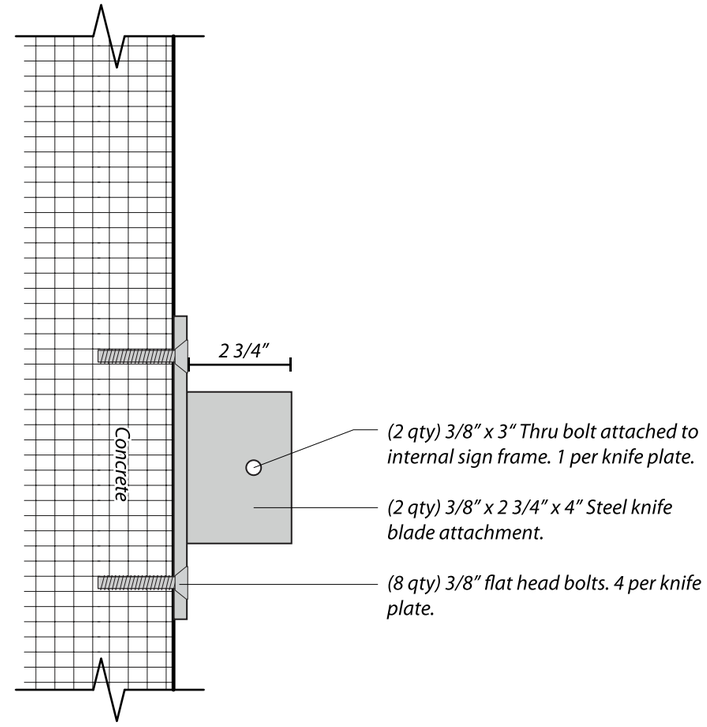

Knife Plate Install Detail
Scale: 3"=1'-0"

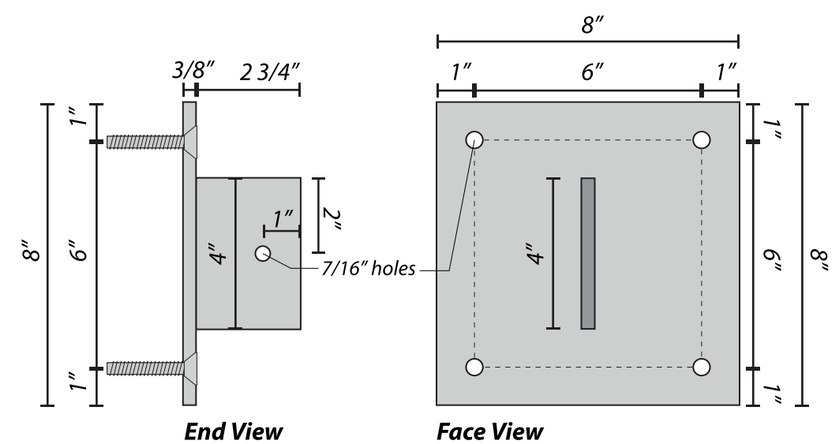

3/8" x 8" x 8" Steel Plate Detail
Scale: 3"=1'-0"

A DESIGN STUDIO

MAIN CONTACT
Gracia Mueller
360.929.3077

CREATIVE
Brody Lund
425.359.7380

Additional information:
adesignstudioseattle.com

Follow us on social:
@adesignstudioseattle

COPYRIGHT
All artwork contained herein is the copyrighted property of A Design Studio Seattle. This includes, but is not limited to, logos, specifications, artwork and engineering. Any usage beyond internal reviews shall require our appoval and a separate design fee paid to A Design Studio Seattle. Usage rights can also be purchased (limited or complete) for an additional fee. Any unlawful distribution of said artwork is a violation of federal copyright laws.

PROJECT NAME
Terrace Station

PROJECT #
20-004

ADDRESS
23905 Van Ry Blvd
Mountlake Terrace, WA 98043

DATE
12/10/20

VERSION NOTES

V1
V2
V3
V4
V5
V6
V7
V8
V9
V10
V11
V12
V13
V14
V15

PAGE SCALE
1/4" = 1'-0"

PAGE #

B3-S62 - ELEVATION

Sign Area: 6.0 Square Feet

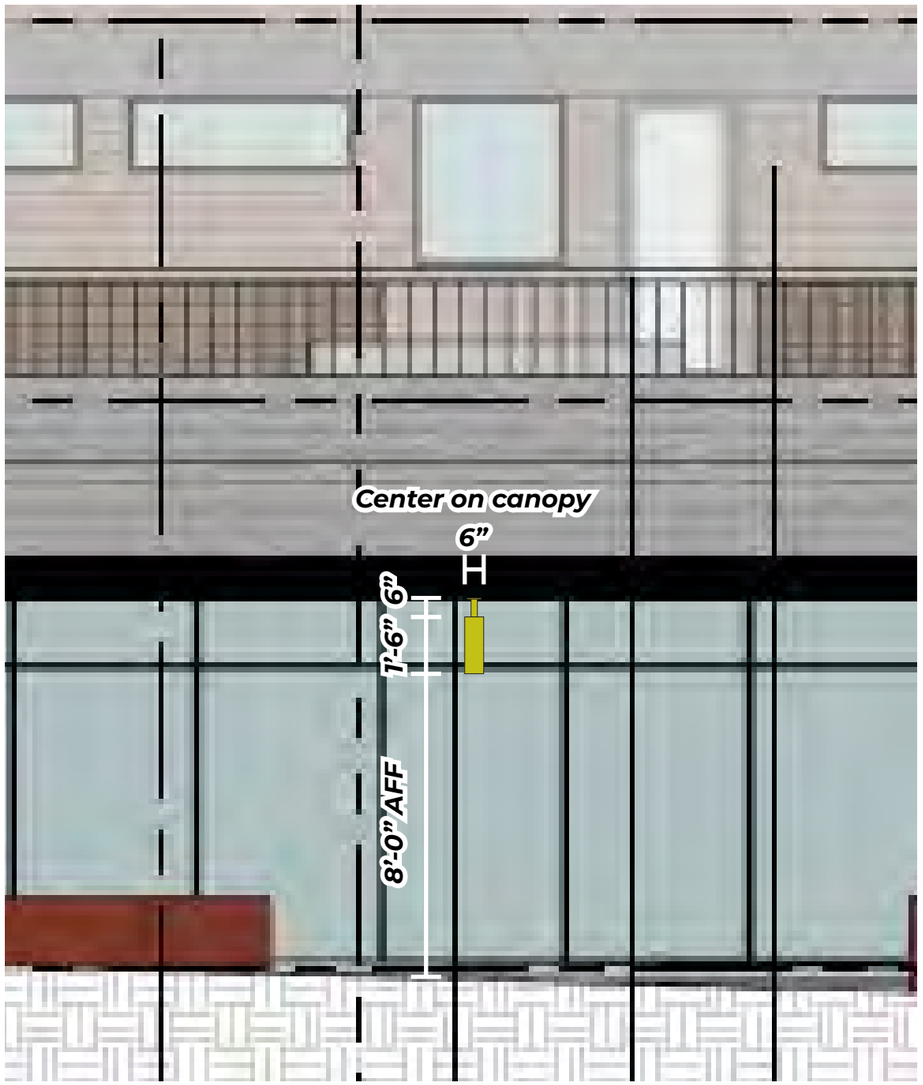

B3 West Elevation

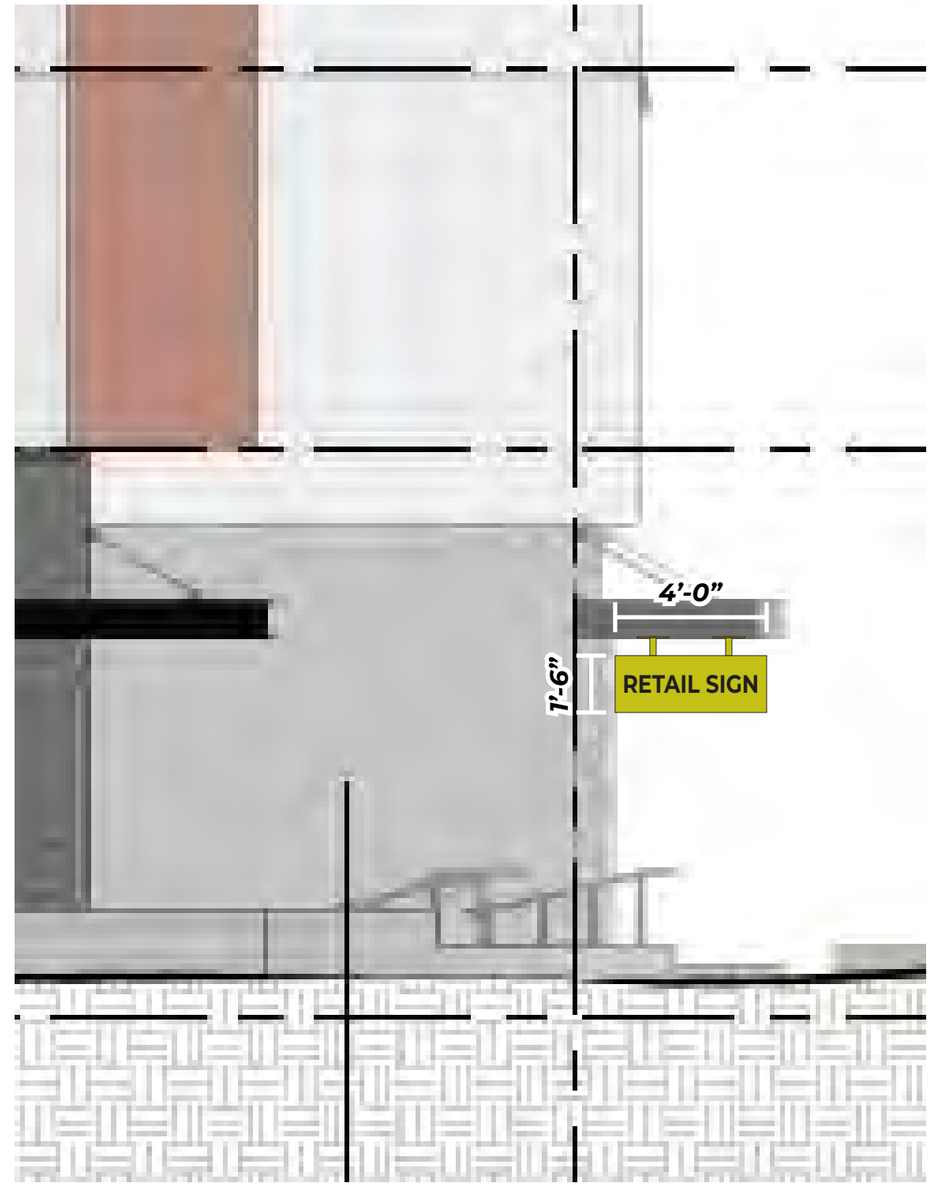

B3 North Elevation

A DESIGN STUDIO

MAIN CONTACT
Gracia Mueller
360.929.3077

CREATIVE
Brody Lund
425.359.7380

Additional information:
adesignstudioseattle.com

Follow us on social:
@adesignstudioseattle

COPYRIGHT
All artwork contained herein is the copyrighted property of A Design Studio Seattle. This includes, but is not limited to, logos, specifications, artwork and engineering. Any usage beyond internal reviews shall require our appoval and a separate design fee paid to A Design Studio Seattle. Usage rights can also be purchased (limited or complete) for an additional fee. Any unlawful distribution of said artwork is a violation of federal copyright laws.

PROJECT NAME
Terrace Station

PROJECT #
20-004

ADDRESS
23905 Van Ry Blvd
Mountlake Terrace, WA 98043

DATE
12/10/20

VERSION NOTES

V1
V2
V3
V4
V5
V6
V7
V8
V9
V10
V11
V12
V13
V14
V15

PAGE SCALE
1/4” = 1’-0”

PAGE #
183

B3-S62- ATTACHMENT DETAILS

Sign Area: 6.0 Square Feet

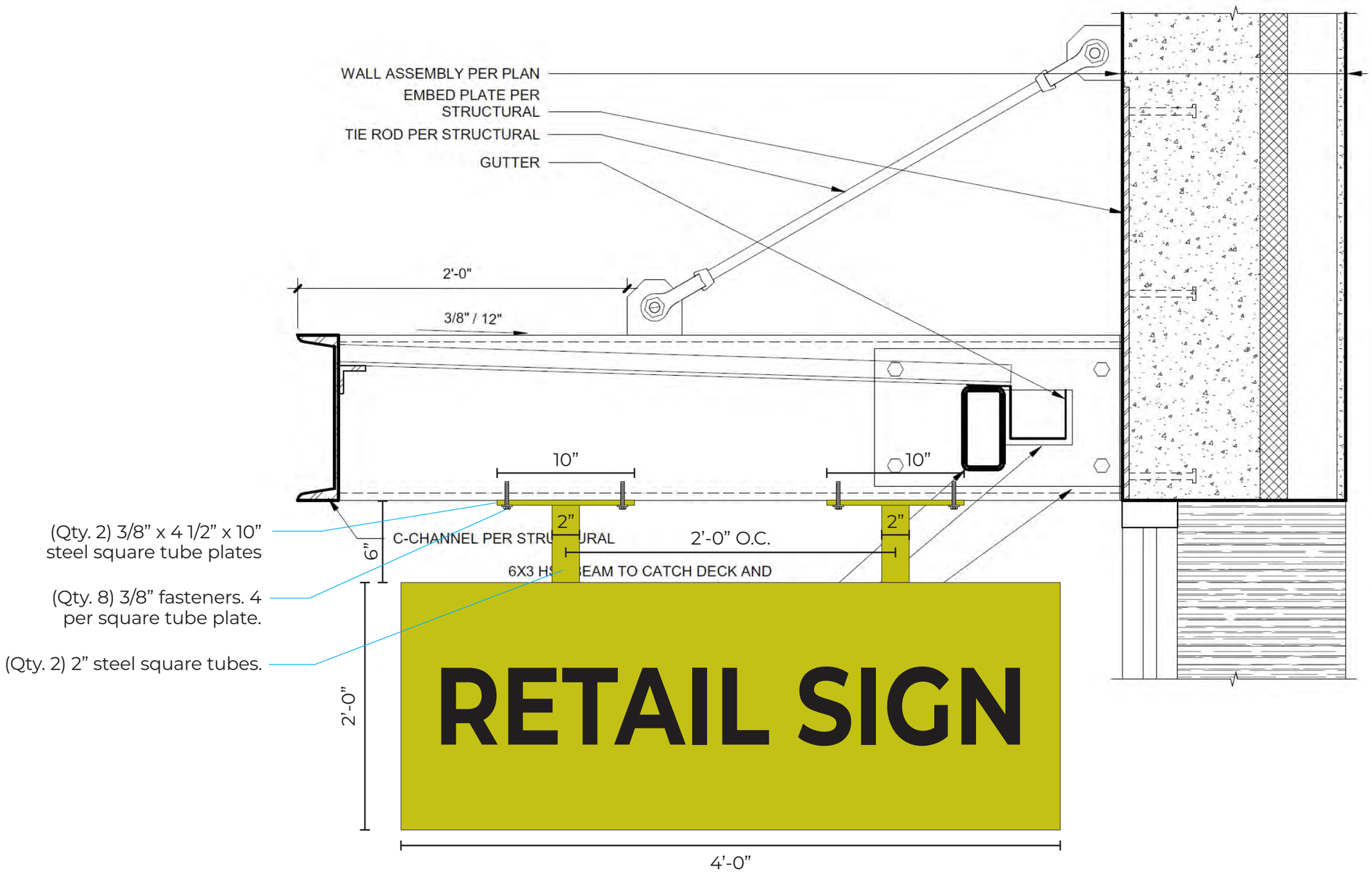

Center within canopy

A DESIGN STUDIO

MAIN CONTACT
Gracia Mueller
360.929.3077

CREATIVE
Brody Lund
425.359.7380

Additional information:
adesignstudioseattle.com

Follow us on social:
@adesignstudioseattle

COPYRIGHT
All artwork contained herein is the copyrighted property of A Design Studio Seattle. This includes, but is not limited to, logos, specifications, artwork and engineering. Any usage beyond internal reviews shall require our appoval and a separate design fee paid to A Design Studio Seattle. Usage rights can also be purchased (limited or complete) for an additional fee. Any unlawful distribution of said artwork is a violation of federal copyright laws.

PROJECT NAME
Terrace Station

PROJECT #
20-004

ADDRESS
23905 Van Ry Blvd
Mountlake Terrace, WA 98043

DATE
12/10/20

VERSION NOTES

V1
V2
V3
V4
V5
V6
V7
V8
V9
V10
V11
V12
V13
V14
V15

PAGE SCALE
1 1/2" = 1'-0"

PAGE #
184

B3-S63 - ELEVATION

Sign Area: 40.0 Square Feet

B3 West Elevation

A DESIGN STUDIO

MAIN CONTACT
Gracia Mueller
360.929.3077

CREATIVE
Brody Lund
425.359.7380

Additional information:
adesignstudioseattle.com

Follow us on social:
@adesignstudioseattle

COPYRIGHT
All artwork contained herein is the copyrighted property of A Design Studio Seattle. This includes, but is not limited to, logos, specifications, artwork and engineering. Any usage beyond internal reviews shall require our appoval and a separate design fee paid to A Design Studio Seattle. Usage rights can also be purchased (limited or complete) for an additional fee. Any unlawful distribution of said artwork is a violation of federal copyright laws.

PROJECT NAME
Terrace Station

PROJECT #
20-004

ADDRESS
23905 Van Ry Blvd
Mountlake Terrace, WA 98043

DATE
12/10/20

VERSION NOTES

V1
V2
V3
V4
V5
V6
V7
V8
V9
V10
V11
V12
V13
V14
V15

PAGE SCALE
1/4" = 1'-0"

PAGE #

B3-S63 - ATTACHMENT DETAILS

Sign Area: 40.0 Square Feet

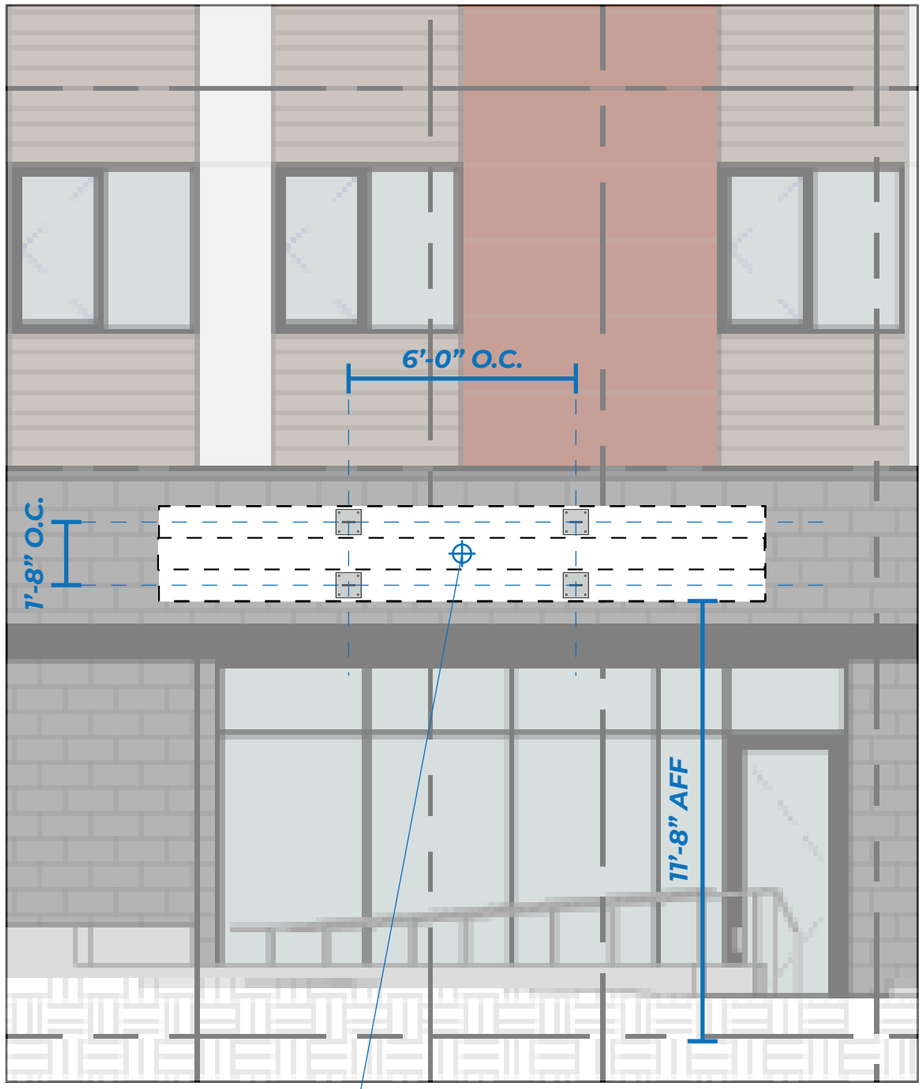

B3 West Elevation
Scale: 1/4" = 1'-0"

Primary Electrical Location
Client to provide 20 Amp / 120 Volt dedicated circuit to sign location

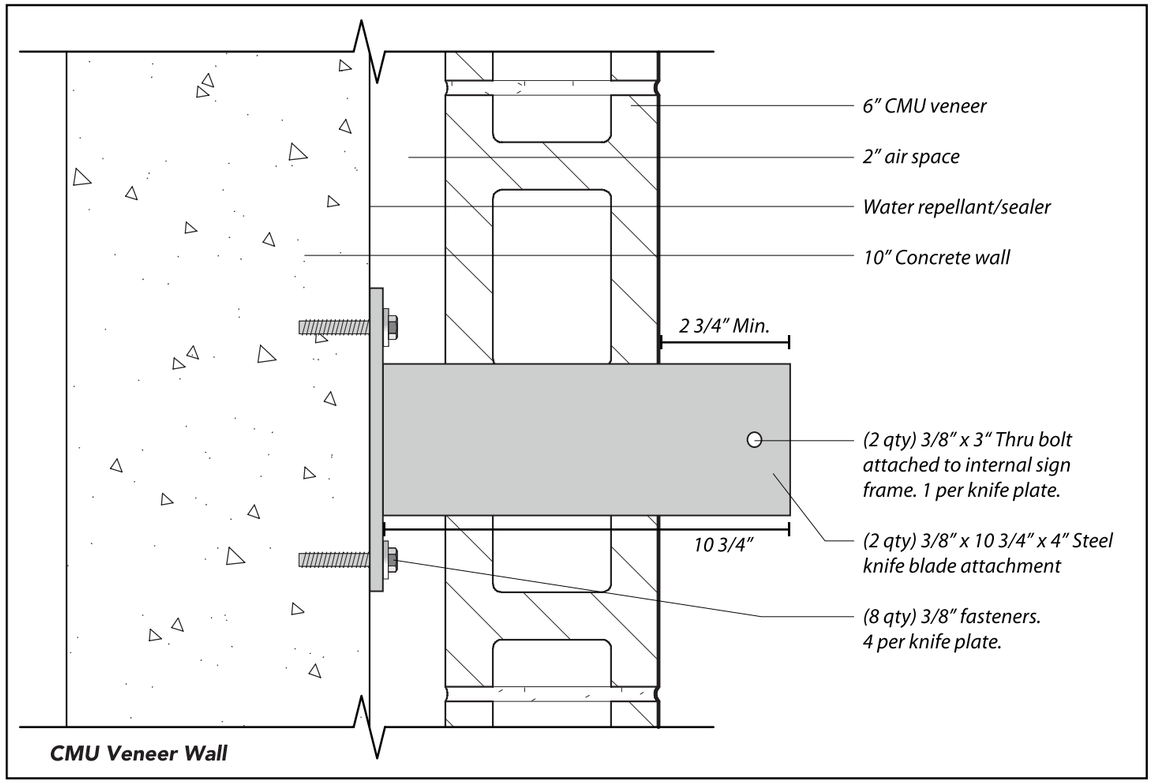

Knife Plate Install Detail
Scale: 3"=1'-0"

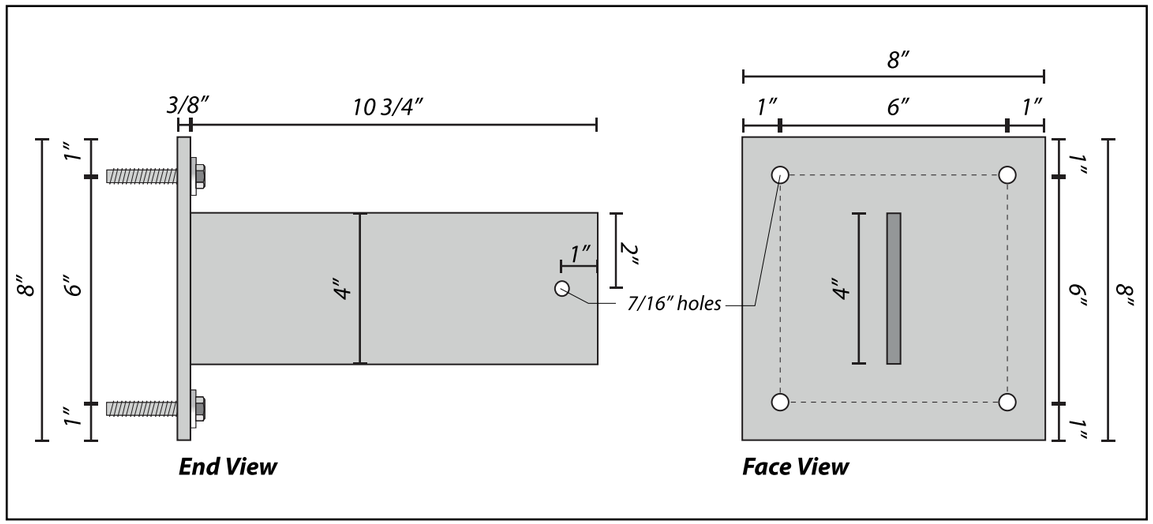

3/8" x 8" x 8" Steel Plate Detail
Scale: 3"=1'-0"

A DESIGN STUDIO

MAIN CONTACT
Gracia Mueller
360.929.3077

CREATIVE
Brody Lund
425.359.7380

Additional information:
adesignstudioseattle.com

Follow us on social:
@adesignstudioseattle

COPYRIGHT
All artwork contained herein is the copyrighted property of A Design Studio Seattle. This includes, but is not limited to, logos, specifications, artwork and engineering. Any usage beyond internal reviews shall require our appoval and a separate design fee paid to A Design Studio Seattle. Usage rights can also be purchased (limited or complete) for an additional fee. Any unlawful distribution of said artwork is a violation of federal copyright laws.

PROJECT NAME
Terrace Station

PROJECT #
20-004

ADDRESS
23905 Van Ry Blvd
Mountlake Terrace, WA 98043

DATE
12/10/20

VERSION NOTES

V1
V2
V3
V4
V5
V6
V7
V8
V9
V10
V11
V12
V13
V14
V15

PAGE SCALE
1/4" = 1'-0"

PAGE #
186

B3-S64 - ELEVATION

Sign Area: 6.0 Square Feet

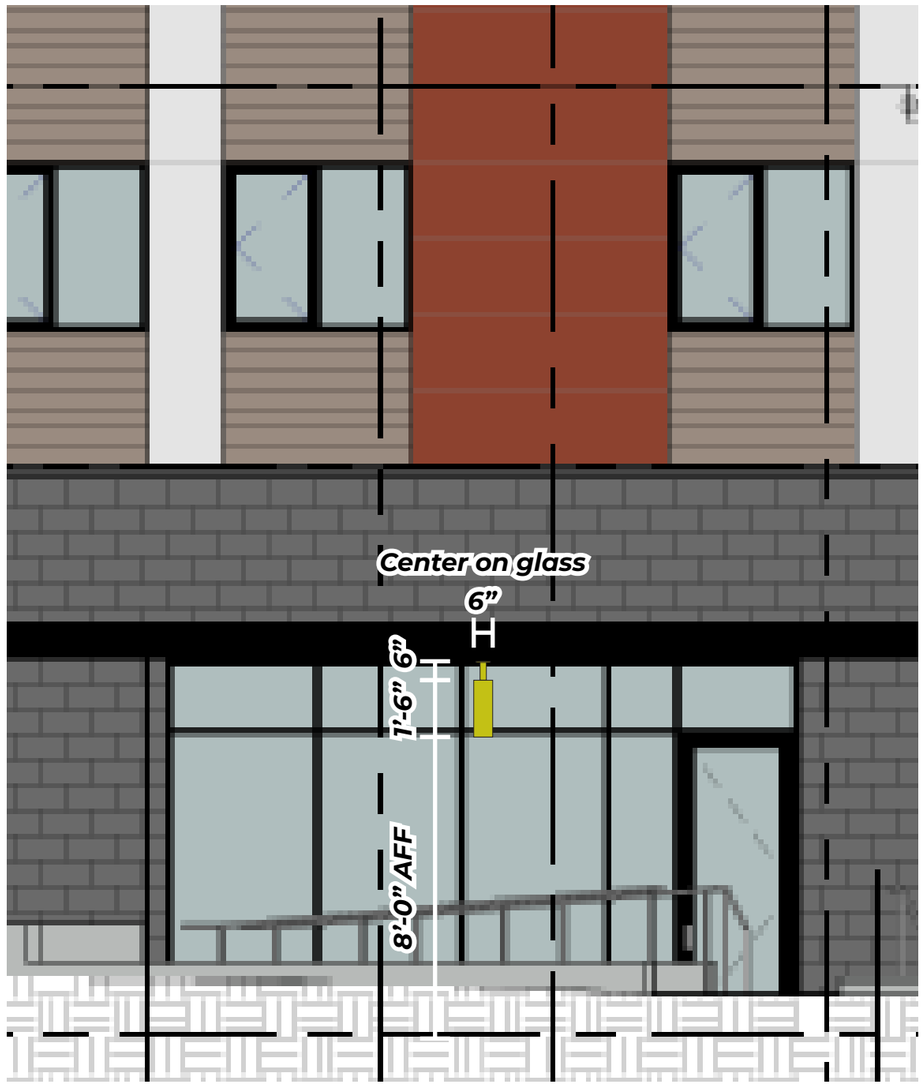

B3 West Elevation

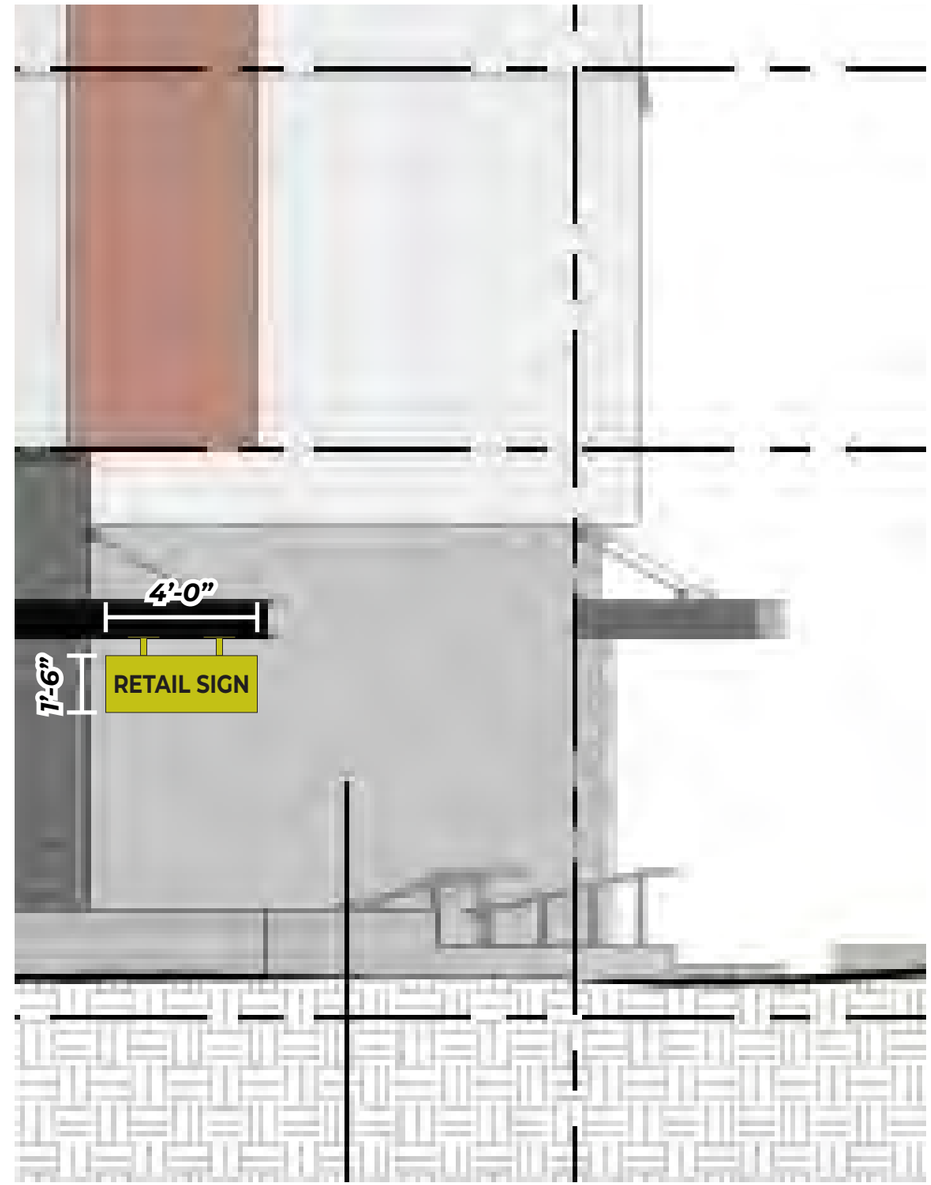

B3 North Elevation

A DESIGN STUDIO

MAIN CONTACT
Gracia Mueller
360.929.3077

CREATIVE
Brody Lund
425.359.7380

Additional information:
adesignstudioseattle.com

Follow us on social:
@adesignstudioseattle

COPYRIGHT
All artwork contained herein is the copyrighted property of A Design Studio Seattle. This includes, but is not limited to, logos, specifications, artwork and engineering. Any usage beyond internal reviews shall require our appoval and a separate design fee paid to A Design Studio Seattle. Usage rights can also be purchased (limited or complete) for an additional fee. Any unlawful distribution of said artwork is a violation of federal copyright laws.

PROJECT NAME
Terrace Station

PROJECT #
20-004

ADDRESS
23905 Van Ry Blvd
Mountlake Terrace, WA 98043

DATE
12/10/20

VERSION NOTES

V1
V2
V3
V4
V5
V6
V7
V8
V9
V10
V11
V12
V13
V14
V15

PAGE SCALE
1/4” = 1’-0”

PAGE #

B3-S64 - ATTACHMENT DETAILS

Sign Area: 6.0 Square Feet

FINAL ATTACHMENT TBD.

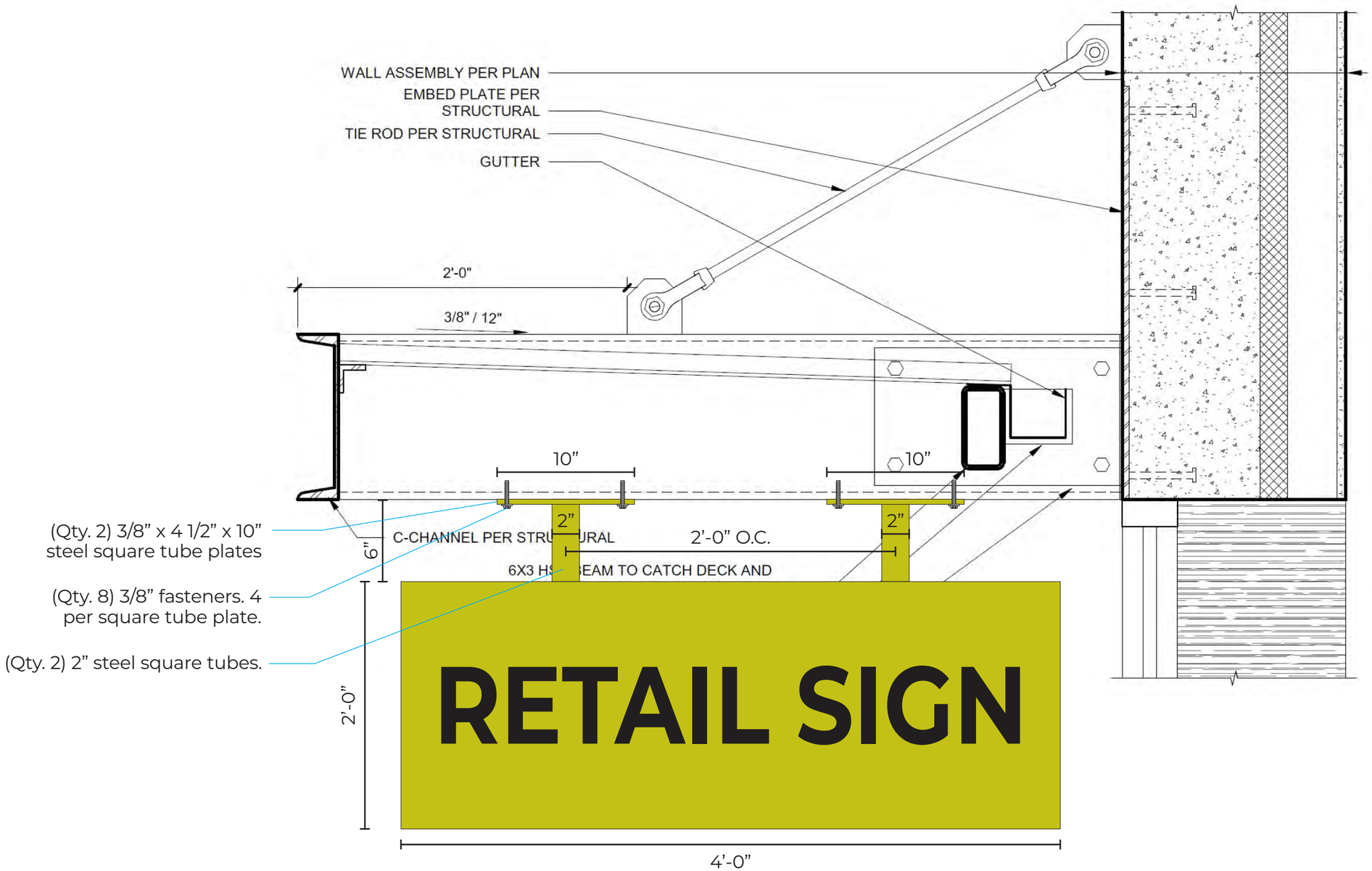

Center within canopy

A DESIGN STUDIO

MAIN CONTACT
Gracia Mueller
360.929.3077

CREATIVE
Brody Lund
425.359.7380

Additional information:
adesignstudioseattle.com

Follow us on social:
@adesignstudioseattle

COPYRIGHT
All artwork contained herein is the copyrighted property of A Design Studio Seattle. This includes, but is not limited to, logos, specifications, artwork and engineering. Any usage beyond internal reviews shall require our appoval and a separate design fee paid to A Design Studio Seattle. Usage rights can also be purchased (limited or complete) for an additional fee. Any unlawful distribution of said artwork is a violation of federal copyright laws.

PROJECT NAME
Terrace Station

PROJECT #
20-004

ADDRESS
23905 Van Ry Blvd
Mountlake Terrace, WA 98043

DATE
12/10/20

VERSION NOTES

V1
V2
V3
V4
V5
V6
V7
V8
V9
V10
V11
V12
V13
V14
V15

PAGE SCALE
1 1/2" = 1'-0"

PAGE #
188

B3-S65 - ELEVATION

Sign Area: 40.0 Square Feet

B3 West Elevation

A DESIGN STUDIO

MAIN CONTACT
Gracia Mueller
360.929.3077

CREATIVE
Brody Lund
425.359.7380

Additional information:
adesignstudioseattle.com

Follow us on social:
@adesignstudioseattle

COPYRIGHT
All artwork contained herein is the copyrighted property of A Design Studio Seattle. This includes, but is not limited to, logos, specifications, artwork and engineering. Any usage beyond internal reviews shall require our appoval and a separate design fee paid to A Design Studio Seattle. Usage rights can also be purchased (limited or complete) for an additional fee. Any unlawful distribution of said artwork is a violation of federal copyright laws.

PROJECT NAME
Terrace Station

PROJECT #
20-004

ADDRESS
23905 Van Ry Blvd
Mountlake Terrace, WA 98043

DATE
12/10/20

VERSION NOTES

V1
V2
V3
V4
V5
V6
V7
V8
V9
V10
V11
V12
V13
V14
V15

PAGE SCALE
1/4" = 1'-0"

B3-S65 - ATTACHMENT DETAILS

FINAL ATTACHMENT TBD.

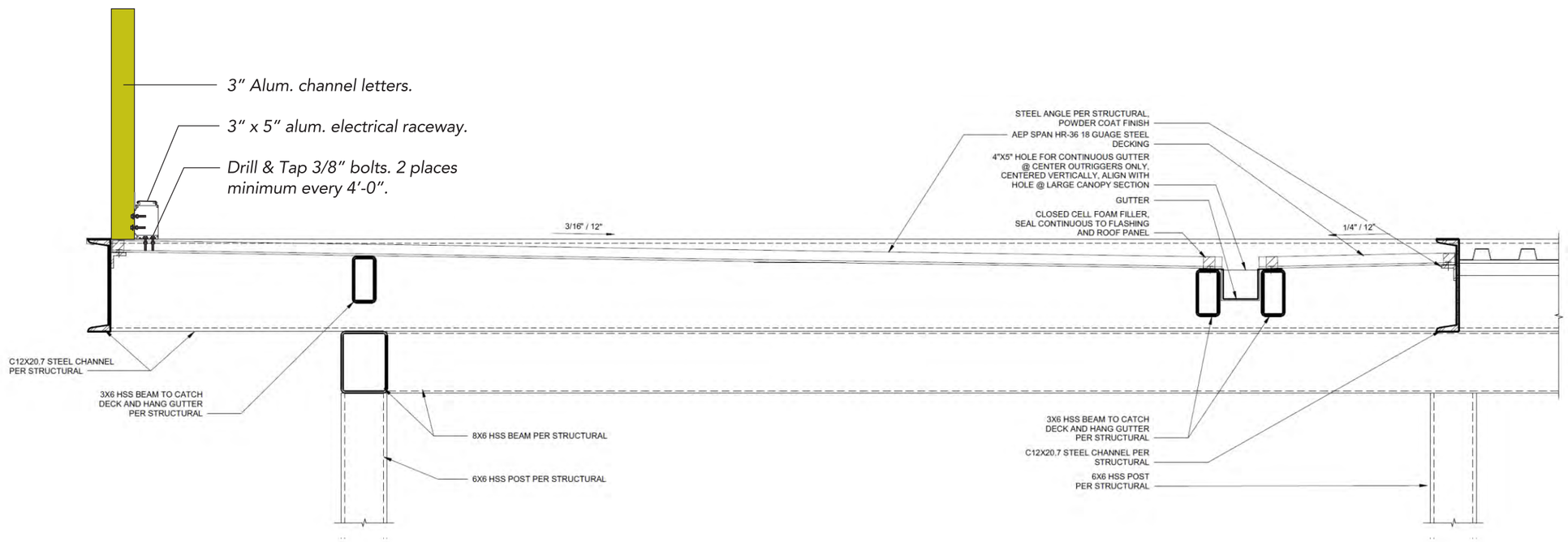

3 LARGE CANOPY CORNER SECTION

A DESIGN STUDIO

MAIN CONTACT
Gracia Mueller
360.929.3077

CREATIVE
Brody Lund
425.359.7380

Additional information:
adesignstudioseattle.com

Follow us on social:
@adesignstudioseattle

COPYRIGHT
All artwork contained herein is the copyrighted property of A Design Studio Seattle. This includes, but is not limited to, logos, specifications, artwork and engineering. Any usage beyond internal reviews shall require our appoval and a separate design fee paid to A Design Studio Seattle. Usage rights can also be purchased (limited or complete) for an additional fee. Any unlawful distribution of said artwork is a violation of federal copyright laws.

PROJECT NAME
Terrace Station

PROJECT #
20-004

ADDRESS
23905 Van Ry Blvd
Mountlake Terrace, WA 98043

DATE
12/10/20

VERSION NOTES

V1
V2
V3
V4
V5
V6
V7
V8
V9
V10
V11
V12
V13
V14
V15

PAGE SCALE
3/4" = 1'-0"

PAGE #

B3-S66 - ELEVATION

Sign Area: 115.2 Square Feet

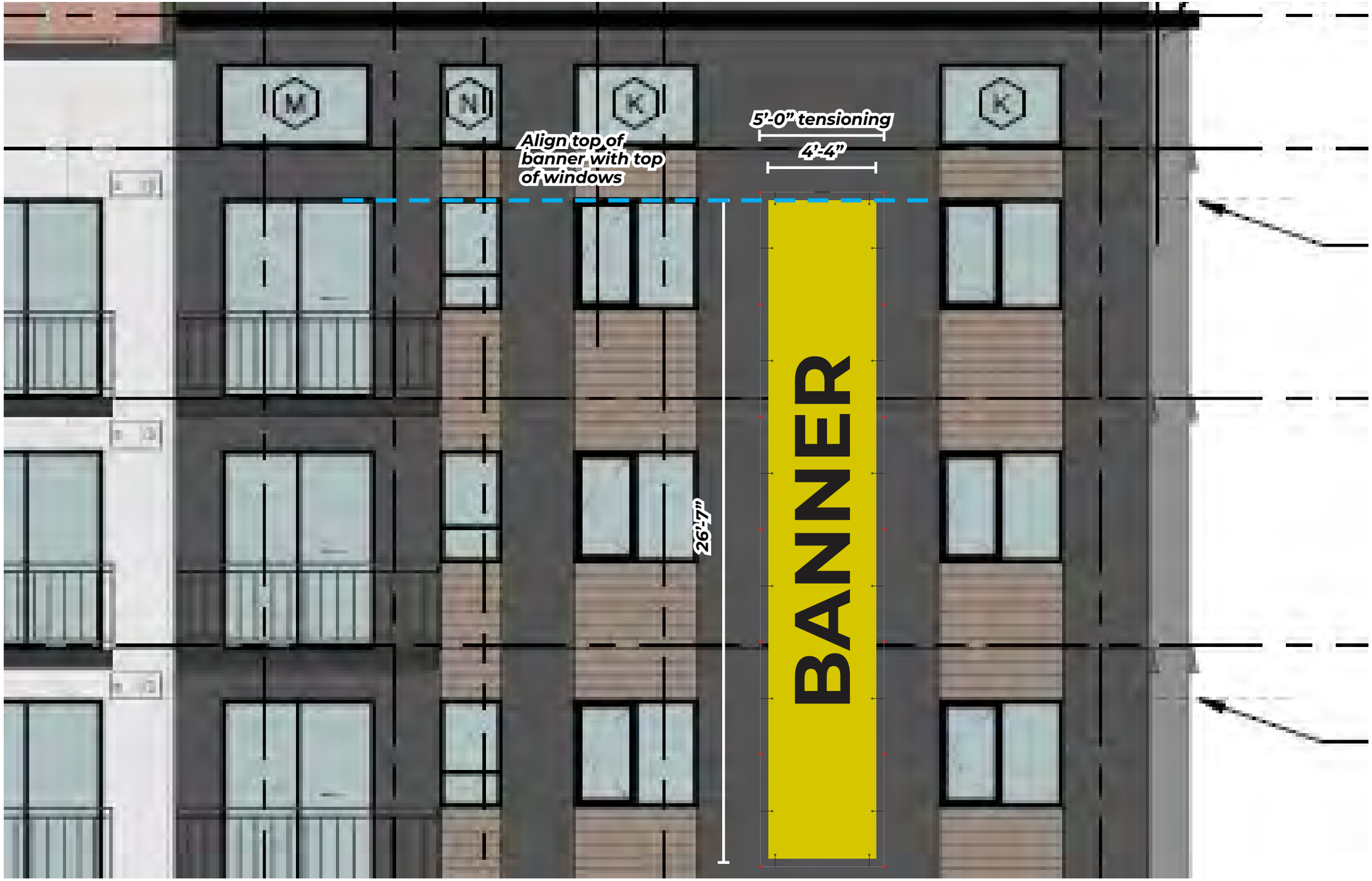

B3 East Elevation

A DESIGN STUDIO

MAIN CONTACT
Gracia Mueller
360.929.3077

CREATIVE
Brody Lund
425.359.7380

Additional information:
adesignstudioseattle.com

Follow us on social:
@adesignstudioseattle

COPYRIGHT
All artwork contained herein is the copyrighted property of A Design Studio Seattle. This includes, but is not limited to, logos, specifications, artwork and engineering. Any usage beyond internal reviews shall require our appoval and a separate design fee paid to A Design Studio Seattle. Usage rights can also be purchased (limited or complete) for an additional fee. Any unlawful distribution of said artwork is a violation of federal copyright laws.

PROJECT NAME
Terrace Station

PROJECT #
20-004

ADDRESS
23905 Van Ry Blvd
Mountlake Terrace, WA 98043

DATE
12/10/20

VERSION NOTES

V1
V2
V3
V4
V5
V6
V7
V8
V9
V10
V11
V12
V13
V14
V15

PAGE SCALE
1/4" = 1'-0"

B3-S67 - ELEVATION

Sign Area: 115.2 Square Feet

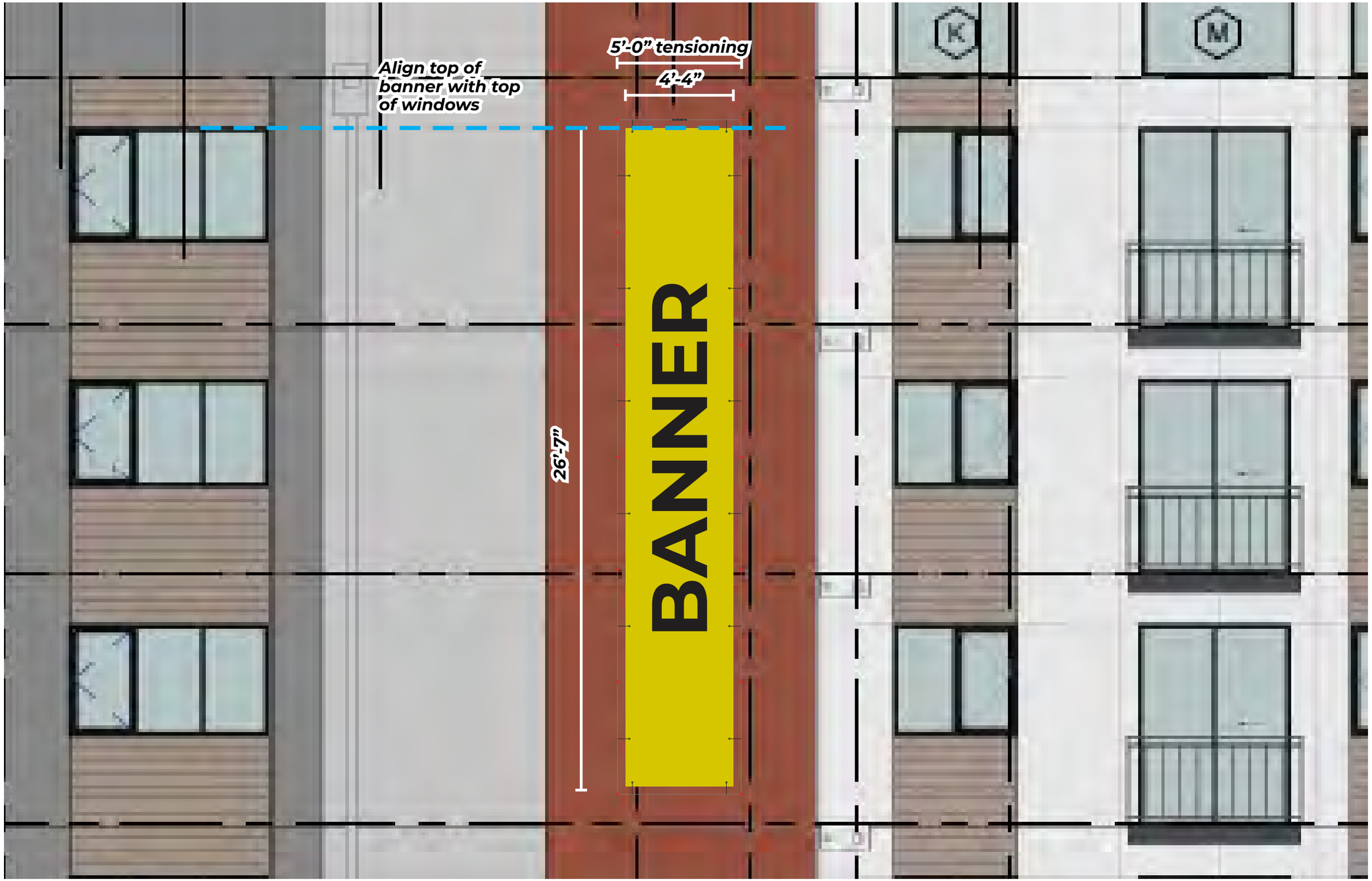

B3 North Elevation

A DESIGN STUDIO

MAIN CONTACT
Gracia Mueller
360.929.3077

CREATIVE
Brody Lund
425.359.7380

Additional information:
adesignstudioseattle.com

Follow us on social:
@adesignstudioseattle

COPYRIGHT
All artwork contained herein is the copyrighted property of A Design Studio Seattle. This includes, but is not limited to, logos, specifications, artwork and engineering. Any usage beyond internal reviews shall require our appoval and a separate design fee paid to A Design Studio Seattle. Usage rights can also be purchased (limited or complete) for an additional fee. Any unlawful distribution of said artwork is a violation of federal copyright laws.

PROJECT NAME
Terrace Station

PROJECT #
20-004

ADDRESS
23905 Van Ry Blvd
Mountlake Terrace, WA 98043

DATE
12/10/20

VERSION NOTES

V1
V2
V3
V4
V5
V6
V7
V8
V9
V10
V11
V12
V13
V14
V15

PAGE SCALE
1/4" = 1'-0"

PAGE #

B3-S66 & S67 - DETAILS

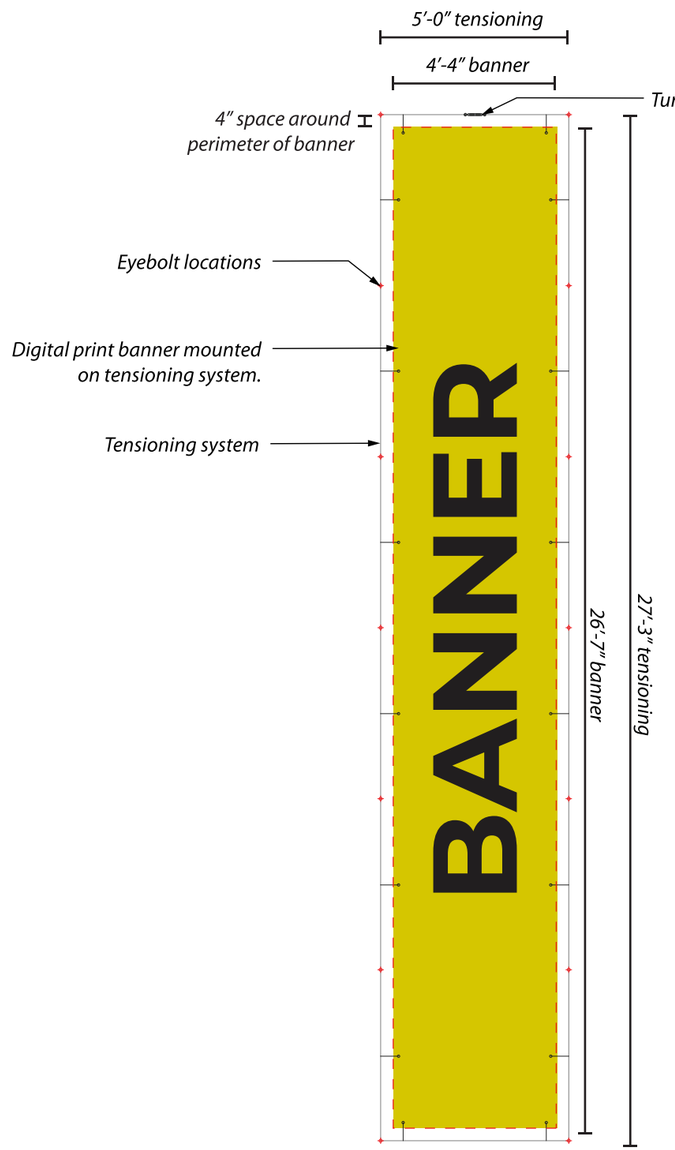

Front View

Sign Area: 115.2 Square Feet

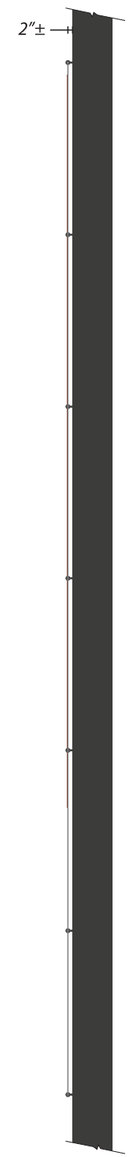

End View

Banner Installation

Required Materials:

- *Eye Bolts*
- *Tenson Cable*
- *Turnbuckle*

Eye Bolts To Be Provided By Others.

Banners Attach to Cable Tension System With Quick Lock Fasteners.

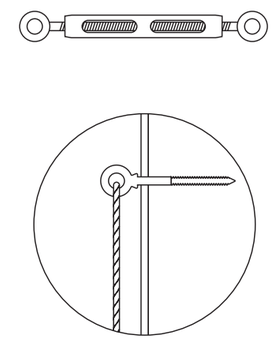

Tensioning System Components

A DESIGN STUDIO

MAIN CONTACT
Gracia Mueller
360.929.3077

CREATIVE
Brody Lund
425.359.7380

Additional information:
adesignstudioseattle.com

Follow us on social:
@adesignstudioseattle

COPYRIGHT
All artwork contained herein is the copyrighted property of A Design Studio Seattle. This includes, but is not limited to, logos, specifications, artwork and engineering. Any usage beyond internal reviews shall require our appoval and a separate design fee paid to A Design Studio Seattle. Usage rights can also be purchased (limited or complete) for an additional fee. Any unlawful distribution of said artwork is a violation of federal copyright laws.

PROJECT NAME
Terrace Station

PROJECT #
20-004

ADDRESS
23905 Van Ry Blvd
Mountlake Terrace, WA 98043

DATE
12/10/20

VERSION NOTES

V1
V2
V3
V4
V5
V6
V7
V8
V9
V10
V11
V12
V13
V14
V15

PAGE SCALE
1/4" = 1'-0"

PAGE #

B3-S66 & S67 - ATTACHMENT DETAILS

NOTES:
1. FRAMING PER ARCH
2. ALIGN FASTENERS w/ BATTENS & STUDS

EXTERIOR

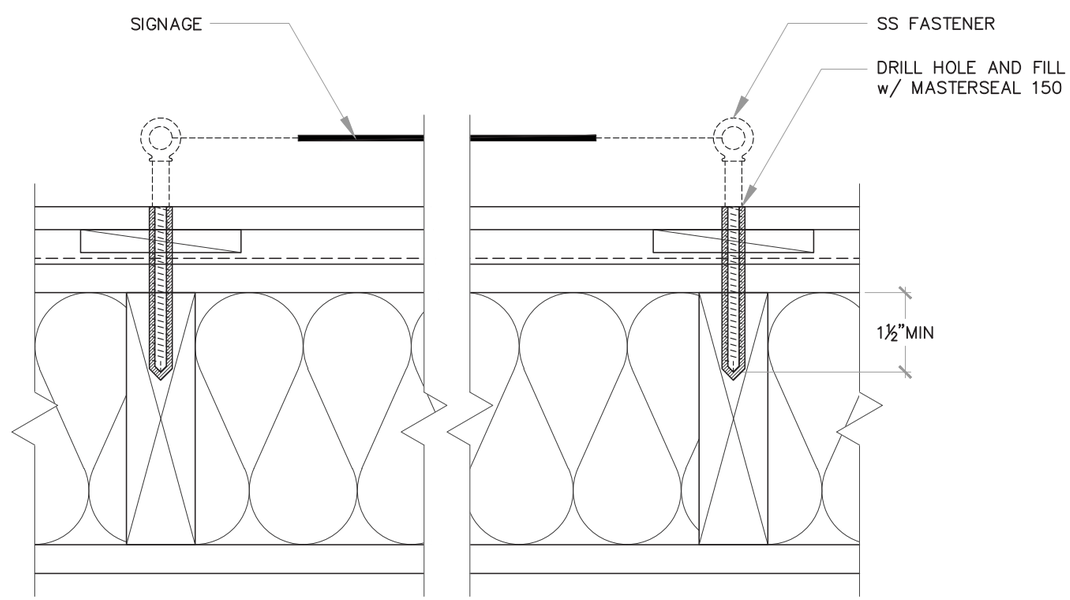

INTERIOR

229 (TYPICAL)

PLAN: TEMPORARY SIGNAGE ATTACHMENT

SCALE: NTS

A DESIGN STUDIO

MAIN CONTACT
Gracia Mueller
360.929.3077

CREATIVE
Brody Lund
425.359.7380

Additional information:
adesignstudioseattle.com

Follow us on social:
@adesignstudioseattle

COPYRIGHT
All artwork contained herein is the copyrighted property of A Design Studio Seattle. This includes, but is not limited to, logos, specifications, artwork and engineering. Any usage beyond internal reviews shall require our appoval and a separate design fee paid to A Design Studio Seattle. Usage rights can also be purchased (limited or complete) for an additional fee. Any unlawful distribution of said artwork is a violation of federal copyright laws.

PROJECT NAME
Terrace Station

PROJECT #
20-004

ADDRESS
23905 Van Ry Blvd
Mountlake Terrace, WA 98043

DATE
12/10/20

VERSION NOTES

V1
V2
V3
V4
V5
V6
V7
V8
V9
V10
V11
V12
V13
V14
V15

PAGE SCALE
N/A

PAGE #
194

MONUMENTS & DIRECTIONALS

A DESIGN STUDIO

MAIN CONTACT
Gracia Mueller
360.929.3077

CREATIVE
Brody Lund
425.359.7380

Additional information:
adesignstudioseattle.com

Follow us on social:
@adesignstudioseattle

COPYRIGHT
All artwork contained herein is the copyrighted property of A Design Studio Seattle. This includes, but is not limited to, logos, specifications, artwork and engineering. Any usage beyond internal reviews shall require our appoval and a separate design fee paid to A Design Studio Seattle. Usage rights can also be purchased (limited or complete) for an additional fee. Any unlawful distribution of said artwork is a violation of federal copyright laws.

PROJECT NAME
Terrace Station

PROJECT #
20-004

ADDRESS
24015 Van Ry Blvd
Mountlake Terrace, WA 98043

DATE
12/10/20

VERSION NOTES

V1
V2
V3
V4
V5
V6
V7
V8
V9
V10
V11
V12
V13
V14
V15

PAGE SCALE
As Noted

PAGE #

SITE PLANS - NORTH SECTION

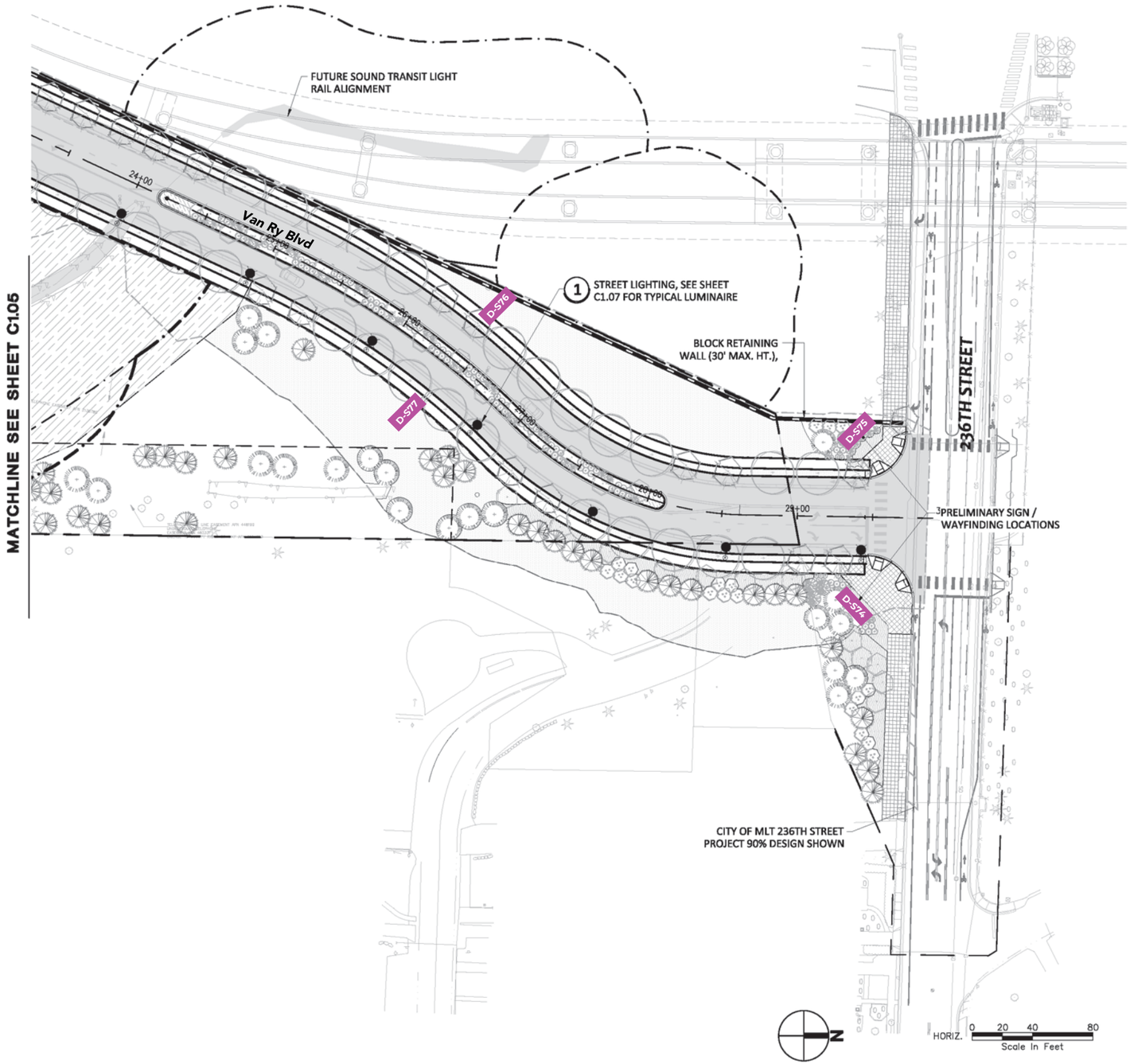

SIGN LEGEND
■ DIRECTIONAL SIGNAGE

N

A DESIGN STUDIO

MAIN CONTACT
Gracia Mueller
360.929.3077

CREATIVE
Brody Lund
425.359.7380

Additional information:
adesignstudioseattle.com

Follow us on social:
@adesignstudioseattle

COPYRIGHT
All artwork contained herein is the copyrighted property of A Design Studio Seattle. This includes, but is not limited to, logos, specifications, artwork and engineering. Any usage beyond internal reviews shall require our appoval and a separate design fee paid to A Design Studio Seattle. Usage rights can also be purchased (limited or complete) for an additional fee. Any unlawful distribution of said artwork is a violation of federal copyright laws.

PROJECT NAME
Terrace Station

PROJECT #
20-004

ADDRESS
24015 Van Ry Blvd
Mountlake Terrace, WA 98043

DATE
12/10/20

VERSION NOTES

V1
V2
V3
V4
V5
V6
V7
V8
V9
V10
V11
V12
V13
V14
V15

PAGE SCALE
1" = 80'-0"

PAGE #
196

SITE PLANS - OVERALL

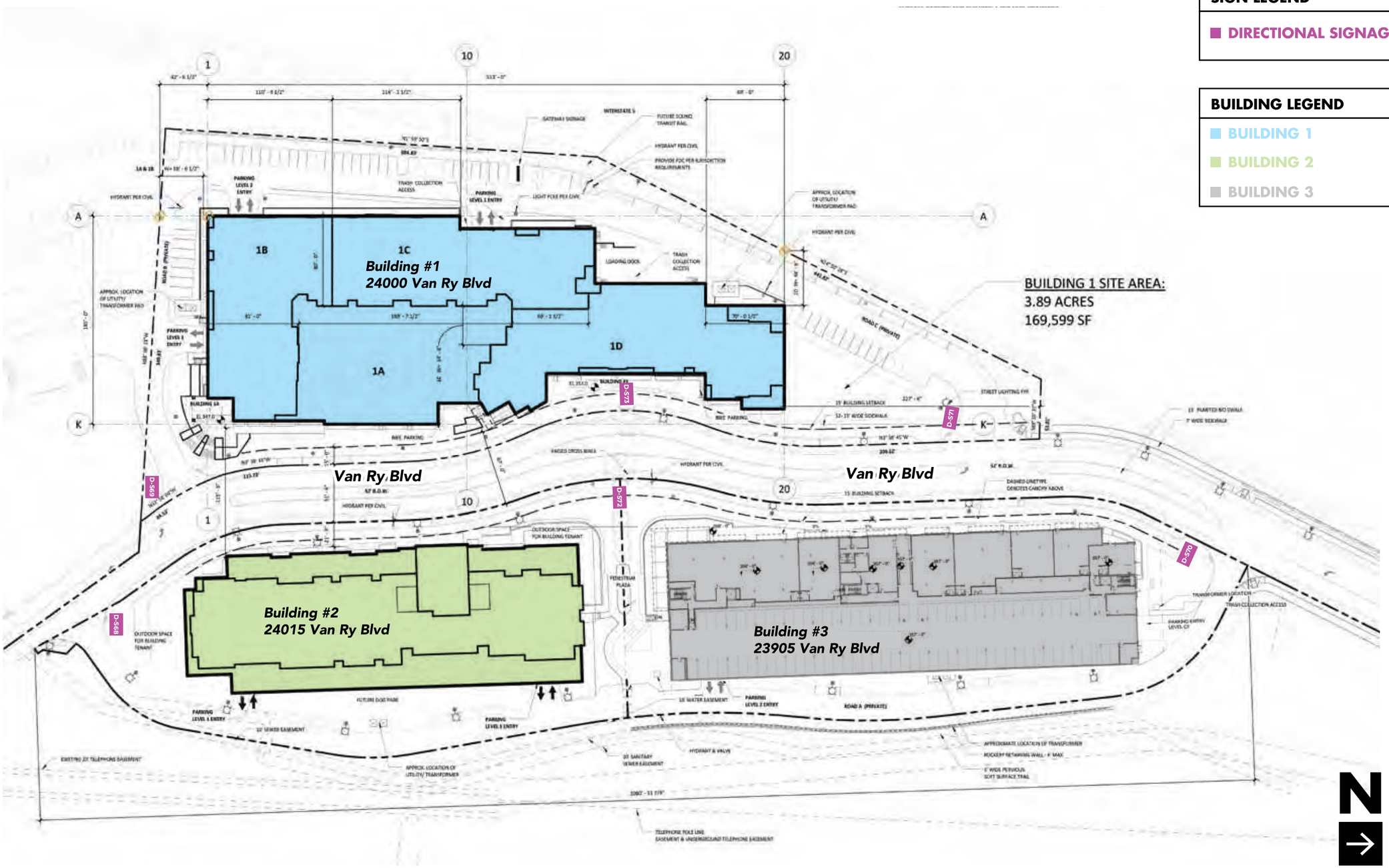

SIGN LEGEND
DIRECTIONAL SIGNAGE

BUILDING LEGEND
BUILDING 1
BUILDING 2
BUILDING 3

A DESIGN STUDIO

MAIN CONTACT
Gracia Mueller
360.929.3077

CREATIVE
Brody Lund
425.359.7380

Additional information:
adesignstudioseattle.com

Follow us on social:
@adesignstudioseattle

COPYRIGHT
All artwork contained herein is the copyrighted property of A Design Studio Seattle. This includes, but is not limited to, logos, specifications, artwork and engineering. Any usage beyond internal reviews shall require our appoval and a separate design fee paid to A Design Studio Seattle. Usage rights can also be purchased (limited or complete) for an additional fee. Any unlawful distribution of said artwork is a violation of federal copyright laws.

PROJECT NAME
Terrace Station

PROJECT #
20-004

ADDRESS
24015 Van Ry Blvd
Mountlake Terrace, WA 98043

DATE
12/10/20

VERSION NOTES

V1
V2
V3
V4
V5
V6
V7
V8
V9
V10
V11
V12
V13
V14
V15

PAGE SCALE
1" = 90'-0"

SIGN SCHEDULE

SIGN #	DESCRIPTION	
D-S68	S/F ILLUMINATED MONUMENT SIGN ▪ QTY (1) 2'-2" W x 5'-0" H ▪ SIGN AREA: 9.4 SQ FT	PAGE 199-200
D-S69	S/F ILLUMINATED MONUMENT SIGN ▪ QTY (1) 2'-2" W x 5'-0" H ▪ SIGN AREA: 9.4 SQ FT	PAGE 201-202
D-S70	S/F ILLUMINATED MONUMENT SIGN ▪ QTY (1) 2'-2" W x 5'-0" H ▪ SIGN AREA: 9.4 SQ FT	PAGE 203-204
D-S71	S/F ILLUMINATED MONUMENT SIGN ▪ QTY (1) 2'-2" W x 5'-0" H ▪ SIGN AREA: 9.4 SQ FT	PAGE 205-206
D-S72	D/F ILLUMINATED MONUMENT SIGN ▪ QTY (1) 2'-2" W x 5'-0" H ▪ SIGN AREA: 9.4 SQ FT	PAGE 207-208
D-S73	D/F ILLUMINATED MONUMENT SIGN ▪ QTY (1) 2'-2" W x 5'-0" H ▪ SIGN AREA: 9.4 SQ FT	PAGE 207, 209
D-S74	S/F ILLUMINATED MONUMENT SIGN ▪ QTY (1) 6'-11 1/2" W x 5'-0" H ▪ SIGN AREA: 29.4 FT	PAGE 210-211
D-S75	S/F ILLUMINATED MONUMENT SIGN ▪ QTY (1) 6'-11 1/2" W x 5'-0" H ▪ SIGN AREA: 29.4 FT	PAGE 210, 212
D-S76	S/F ILLUMINATED MONUMENT SIGN ▪ QTY (1) 6'-11 1/2" W x 5'-0" H ▪ SIGN AREA: 29.4 FT	PAGE 210, 213
D-S77	S/F ILLUMINATED MONUMENT SIGN ▪ QTY (1) 6'-11 1/2" W x 5'-0" H ▪ SIGN AREA: 29.4 FT	PAGE 210, 214

A DESIGN STUDIO

MAIN CONTACT
Gracia Mueller
360.929.3077

CREATIVE
Brody Lund
425.359.7380

Additional information:
adesignstudioseattle.com

Follow us on social:
@adesignstudioseattle

COPYRIGHT
All artwork contained herein is the copyrighted property of A Design Studio Seattle. This includes, but is not limited to, logos, specifications, artwork and engineering. Any usage beyond internal reviews shall require our appoval and a separate design fee paid to A Design Studio Seattle. Usage rights can also be purchased (limited or complete) for an additional fee. Any unlawful distribution of said artwork is a violation of federal copyright laws.

PROJECT NAME
Terrace Station

PROJECT #
20-004

ADDRESS
24015 Van Ry Blvd
Mountlake Terrace, WA 98043

DATE
12/10/20

VERSION NOTES

V1
V2
V3
V4
V5
V6
V7
V8
V9
V10
V11
V12
V13
V14
V15

PAGE SCALE
As Noted

PAGE #

D-S68 - DETAILS

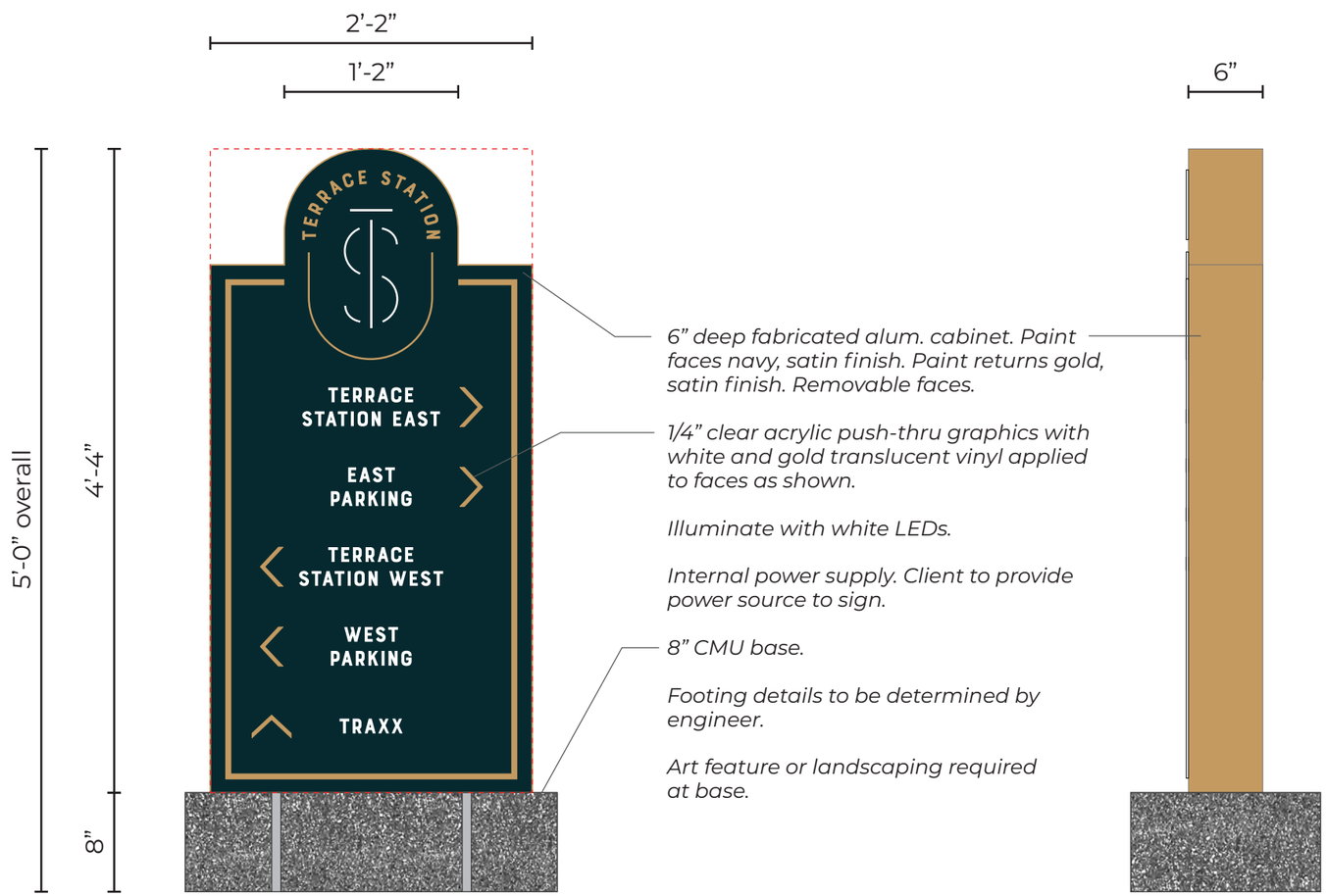

Sign D-S63: *Manufacture & install (1) single face illuminated monument sign with push through graphics.*

Sign Area: 9.4 Square Feet

CLIENT TO PROVIDE
20 AMP / 120 VOLT
DEDICATED SIGN CIRCUIT WITHIN
6 FT OF SIGN LOCATION

A DESIGN STUDIO

MAIN CONTACT
Gracia Mueller
360.929.3077

CREATIVE
Jaclyn Veasley
425.890.6251

Additional information:
adesignstudioseattle.com

Follow us on social:
@adesignstudioseattle

COPYRIGHT
All artwork contained herein is the copyrighted property of A Design Studio Seattle. This includes, but is not limited to, logos, specifications, artwork and engineering. Any usage beyond internal reviews shall require our appoval and a separate design fee paid to A Design Studio Seattle. Usage rights can also be purchased (limited or complete) for an additional fee. Any unlawful distribution of said artwork is a violation of federal copyright laws.

PROJECT NAME
Terrace Station

PROJECT #
20-004

ADDRESS
Address Varies
Mountlake Terrace, WA 98043

DATE
08/05/20

VERSION NOTES

V1	07/14 Concept design
V2	07/31 Revise signs
V3	08/06 Revise signs
V4	08/22 Revise signs
V5	10/02 Revise signs
V6	11/19 Revise signs
V7	01/02 Revise signs
V8	02/20 Revise all concepts & signs
V9	02/24 Revise signs
V10	03/19 Add signs, revise narrative
V11	05/19 Add/revise signs, revise all B3
V12	05/22 Revise B3 & directional signs
V13	06/02 Revise B1 canopy details
V14	08/05 Revise per city comments
V15	

PAGE SCALE
1" = 1'-0"

PAGE #

D-S68 - PLAN DETAILS

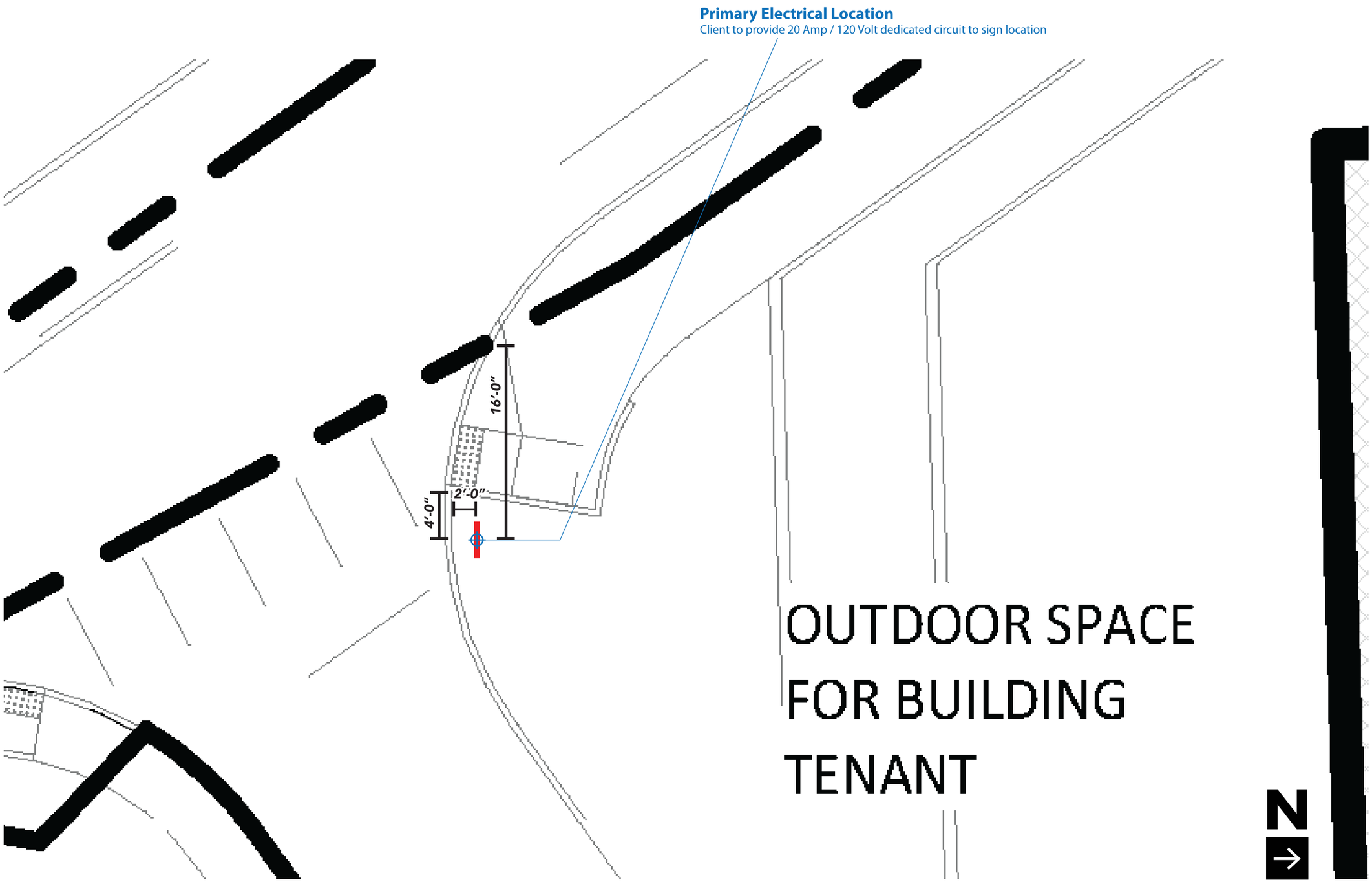

A DESIGN STUDIO

MAIN CONTACT
Gracia Mueller
360.929.3077

CREATIVE
Jaclyn Veasley
425.890.6251

Additional information:
adesignstudioseattle.com

Follow us on social:
@adesignstudioseattle

COPYRIGHT
All artwork contained herein is the copyrighted property of A Design Studio Seattle. This includes, but is not limited to, logos, specifications, artwork and engineering. Any usage beyond internal reviews shall require our appoval and a separate design fee paid to A Design Studio Seattle. Usage rights can also be purchased (limited or complete) for an additional fee. Any unlawful distribution of said artwork is a violation of federal copyright laws.

PROJECT NAME
Terrace Station

PROJECT #
20-004

ADDRESS
Address Varies
Mountlake Terrace, WA 98043

DATE
08/05/20

VERSION NOTES

V1	07/14 Concept design
V2	07/31 Revise signs
V3	08/06 Revise signs
V4	08/22 Revise signs
V5	10/02 Revise signs
V6	11/19 Revise signs
V7	01/02 Revise signs
V8	02/20 Revise all concepts & signs
V9	02/24 Revise signs
V10	03/19 Add signs, revise narrative
V11	05/19 Add/revise signs, revise all B3
V12	05/22 Revise B3 & directional signs
V13	06/02 Revise B1 canopy details
V14	08/05 Revise per city comments
V15	

PAGE SCALE
1/8" = 1'-0"

PAGE #
200

D-S69 - DETAILS

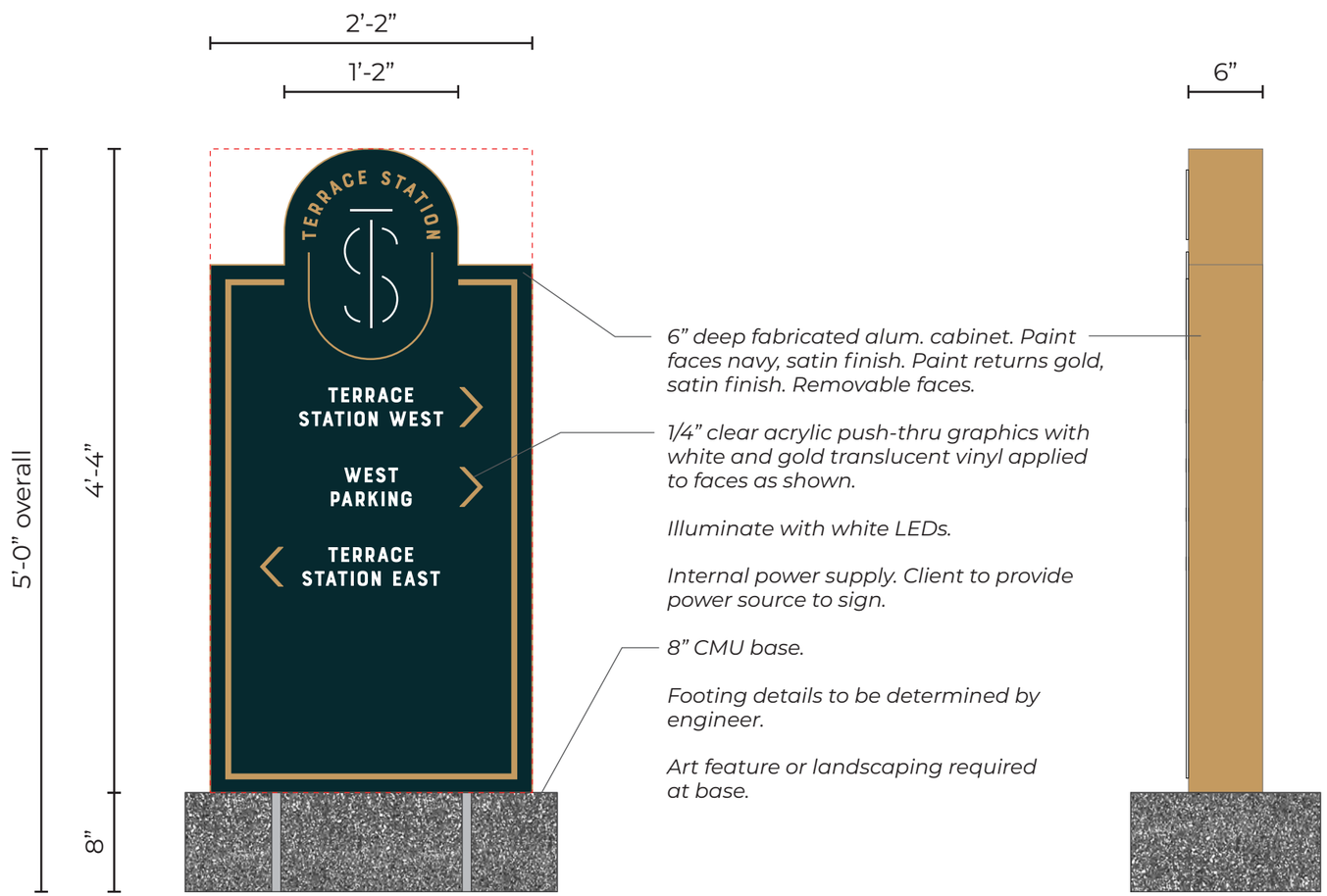

Sign D-S64: *Manufacture & install (1) single face illuminated monument sign with push through graphics.*

Sign Area: 9.4 Square Feet

CLIENT TO PROVIDE
20 AMP / 120 VOLT
DEDICATED SIGN CIRCUIT WITHIN
6 FT OF SIGN LOCATION

A DESIGN STUDIO

MAIN CONTACT
Gracia Mueller
360.929.3077

CREATIVE
Jaclyn Veasley
425.890.6251

Additional information:
adesignstudioseattle.com

Follow us on social:
@adesignstudioseattle

COPYRIGHT
All artwork contained herein is the copyrighted property of A Design Studio Seattle. This includes, but is not limited to, logos, specifications, artwork and engineering. Any usage beyond internal reviews shall require our appoval and a separate design fee paid to A Design Studio Seattle. Usage rights can also be purchased (limited or complete) for an additional fee. Any unlawful distribution of said artwork is a violation of federal copyright laws.

PROJECT NAME
Terrace Station

PROJECT #
20-004

ADDRESS
Address Varies
Mountlake Terrace, WA 98043

DATE
08/05/20

VERSION NOTES

V1	07/14 Concept design
V2	07/31 Revise signs
V3	08/06 Revise signs
V4	08/22 Revise signs
V5	10/02 Revise signs
V6	11/19 Revise signs
V7	01/02 Revise signs
V8	02/20 Revise all concepts & signs
V9	02/24 Revise signs
V10	03/19 Add signs, revise narrative
V11	05/19 Add/revise signs, revise all B3
V12	05/22 Revise B3 & directional signs
V13	06/02 Revise B1 canopy details
V14	08/05 Revise per city comments
V15	

PAGE SCALE
1" = 1'-0"

PAGE #
201

D-S69 - PLAN DETAILS

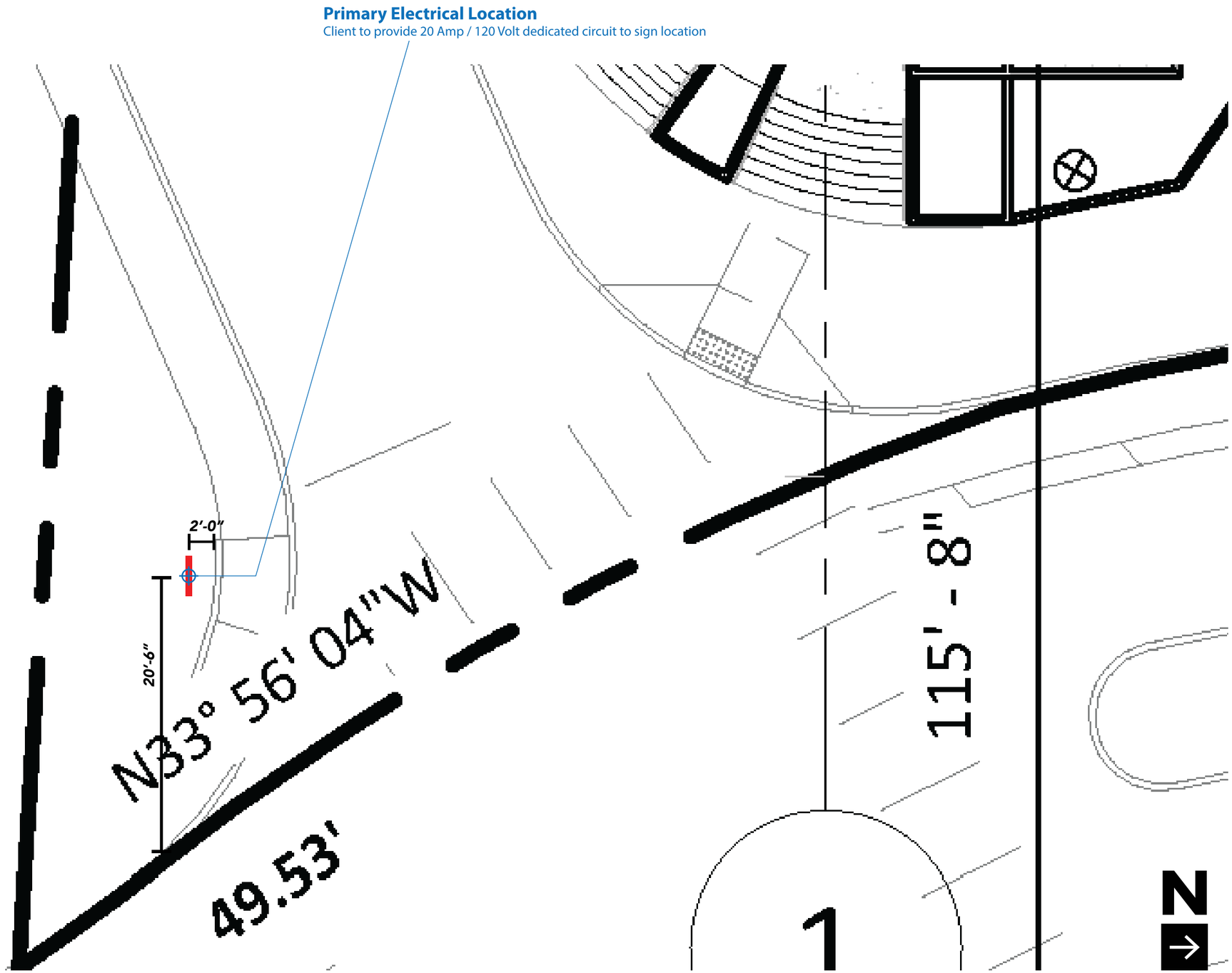

A DESIGN STUDIO

MAIN CONTACT
Gracia Mueller
360.929.3077

CREATIVE
Jaclyn Veasley
425.890.6251

Additional information:
adesignstudioseattle.com

Follow us on social:
@adesignstudioseattle

COPYRIGHT
All artwork contained herein is the copyrighted property of A Design Studio Seattle. This includes, but is not limited to, logos, specifications, artwork and engineering. Any usage beyond internal reviews shall require our appoval and a separate design fee paid to A Design Studio Seattle. Usage rights can also be purchased (limited or complete) for an additional fee. Any unlawful distribution of said artwork is a violation of federal copyright laws.

PROJECT NAME
Terrace Station

PROJECT #
20-004

ADDRESS
Address Varies
Mountlake Terrace, WA 98043

DATE
08/05/20

VERSION NOTES

V1	07/14 Concept design
V2	07/31 Revise signs
V3	08/06 Revise signs
V4	08/22 Revise signs
V5	10/02 Revise signs
V6	11/19 Revise signs
V7	01/02 Revise signs
V8	02/20 Revise all concepts & signs
V9	02/24 Revise signs
V10	03/19 Add signs, revise narrative
V11	05/19 Add/revise signs, revise all B3
V12	05/22 Revise B3 & directional signs
V13	06/02 Revise B1 canopy details
V14	08/05 Revise per city comments
V15	

PAGE SCALE
1/8" = 1'-0"

PAGE #

D-S70 - DETAILS

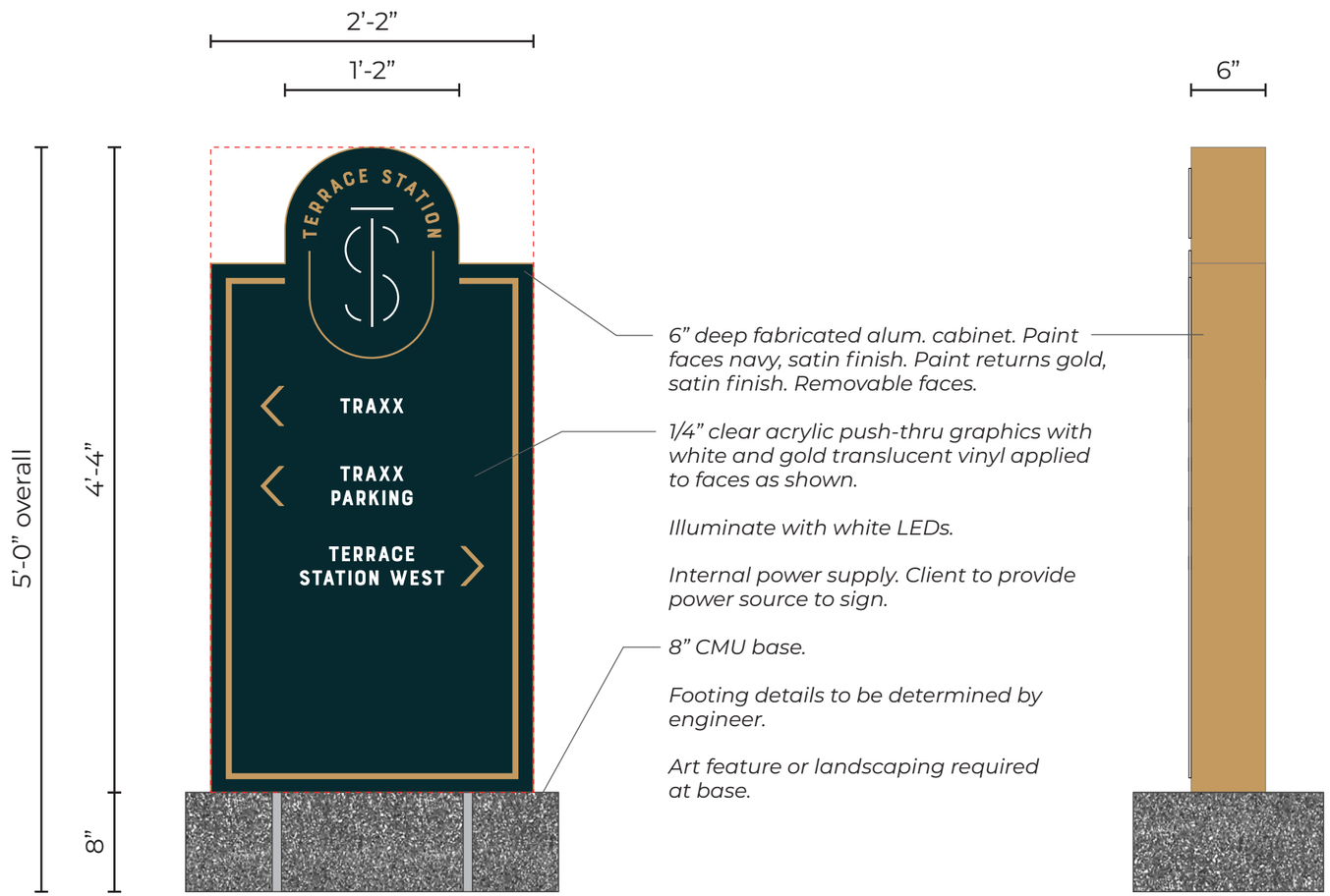

Sign D-S65: *Manufacture & install (1) single face illuminated monument sign with push through graphics.*

Sign Area: 9.4 Square Feet

CLIENT TO PROVIDE 20 AMP / 120 VOLT DEDICATED SIGN CIRCUIT WITHIN 6 FT OF SIGN LOCATION

A DESIGN STUDIO

MAIN CONTACT
Gracia Mueller
360.929.3077

CREATIVE
Jaclyn Veasley
425.890.6251

Additional information:
adesignstudioseattle.com

Follow us on social:
@adesignstudioseattle

COPYRIGHT
All artwork contained herein is the copyrighted property of A Design Studio Seattle. This includes, but is not limited to, logos, specifications, artwork and engineering. Any usage beyond internal reviews shall require our appoval and a separate design fee paid to A Design Studio Seattle. Usage rights can also be purchased (limited or complete) for an additional fee. Any unlawful distribution of said artwork is a violation of federal copyright laws.

PROJECT NAME
Terrace Station

PROJECT #
20-004

ADDRESS
Address Varies
Mountlake Terrace, WA 98043

DATE
08/05/20

VERSION NOTES

V1	07/14 Concept design
V2	07/31 Revise signs
V3	08/06 Revise signs
V4	08/22 Revise signs
V5	10/02 Revise signs
V6	11/19 Revise signs
V7	01/02 Revise signs
V8	02/20 Revise all concepts & signs
V9	02/24 Revise signs
V10	03/19 Add signs, revise narrative
V11	05/19 Add/revise signs, revise all B3
V12	05/22 Revise B3 & directional signs
V13	06/02 Revise B1 canopy details
V14	08/05 Revise per city comments
V15	

PAGE SCALE
1" = 1'-0"

PAGE #
203

D-S70 - PLAN DETAILS

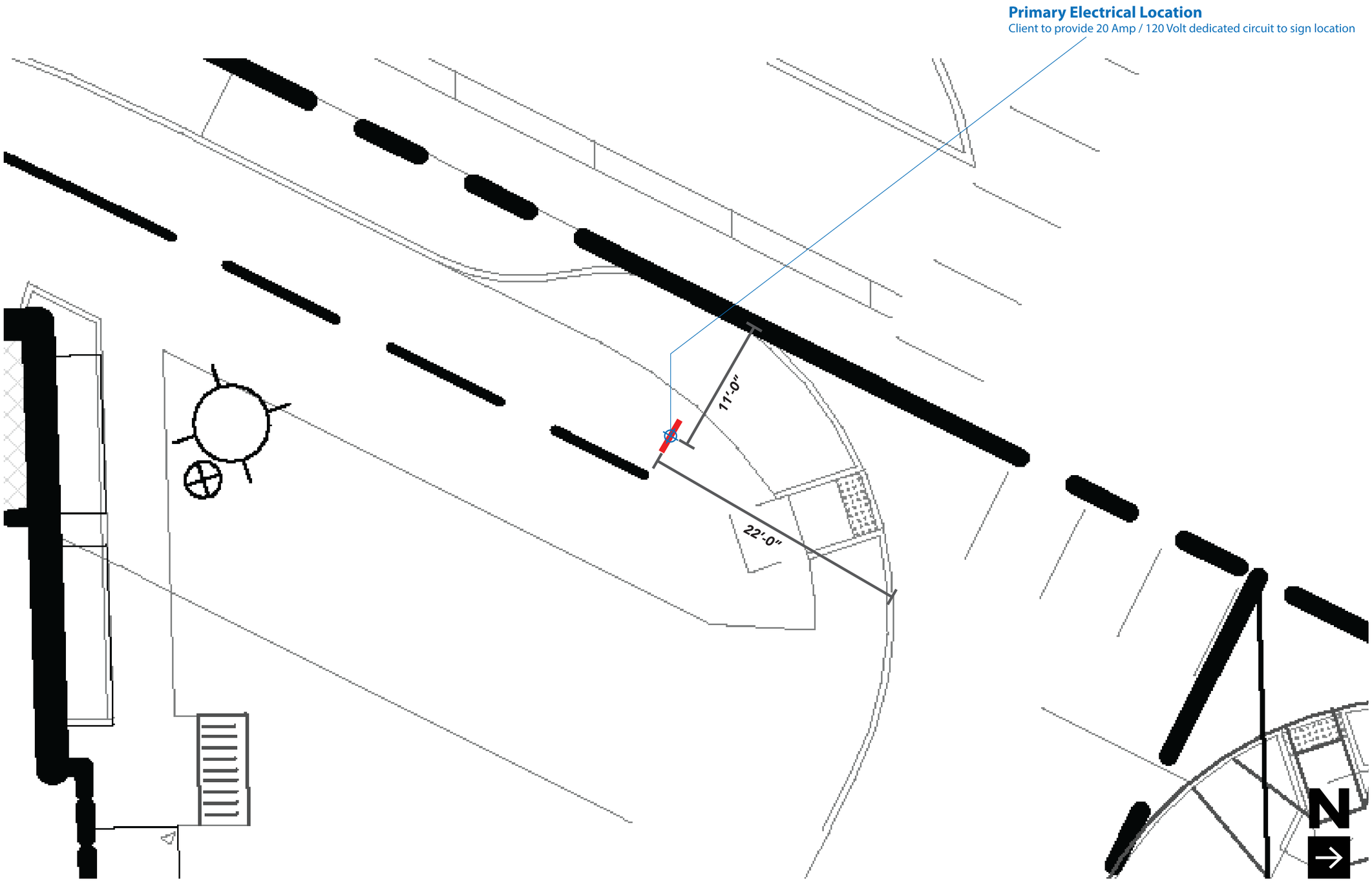

A DESIGN STUDIO

MAIN CONTACT
Gracia Mueller
360.929.3077

CREATIVE
Jaclyn Veasley
425.890.6251

Additional information:
adesignstudioseattle.com

Follow us on social:
@adesignstudioseattle

COPYRIGHT
All artwork contained herein is the copyrighted property of A Design Studio Seattle. This includes, but is not limited to, logos, specifications, artwork and engineering. Any usage beyond internal reviews shall require our appoval and a separate design fee paid to A Design Studio Seattle. Usage rights can also be purchased (limited or complete) for an additional fee. Any unlawful distribution of said artwork is a violation of federal copyright laws.

PROJECT NAME
Terrace Station

PROJECT #
20-004

ADDRESS
Address Varies
Mountlake Terrace, WA 98043

DATE
08/05/20

VERSION NOTES

V1	07/14 Concept design
V2	07/31 Revise signs
V3	08/06 Revise signs
V4	08/22 Revise signs
V5	10/02 Revise signs
V6	11/19 Revise signs
V7	01/02 Revise signs
V8	02/20 Revise all concepts & signs
V9	02/24 Revise signs
V10	03/19 Add signs, revise narrative
V11	05/19 Add/revise signs, revise all B3
V12	05/22 Revise B3 & directional signs
V13	06/02 Revise B1 canopy details
V14	08/05 Revise per city comments
V15	

PAGE SCALE
1/8" = 1'-0"

PAGE #
204

D-S71 - DETAILS

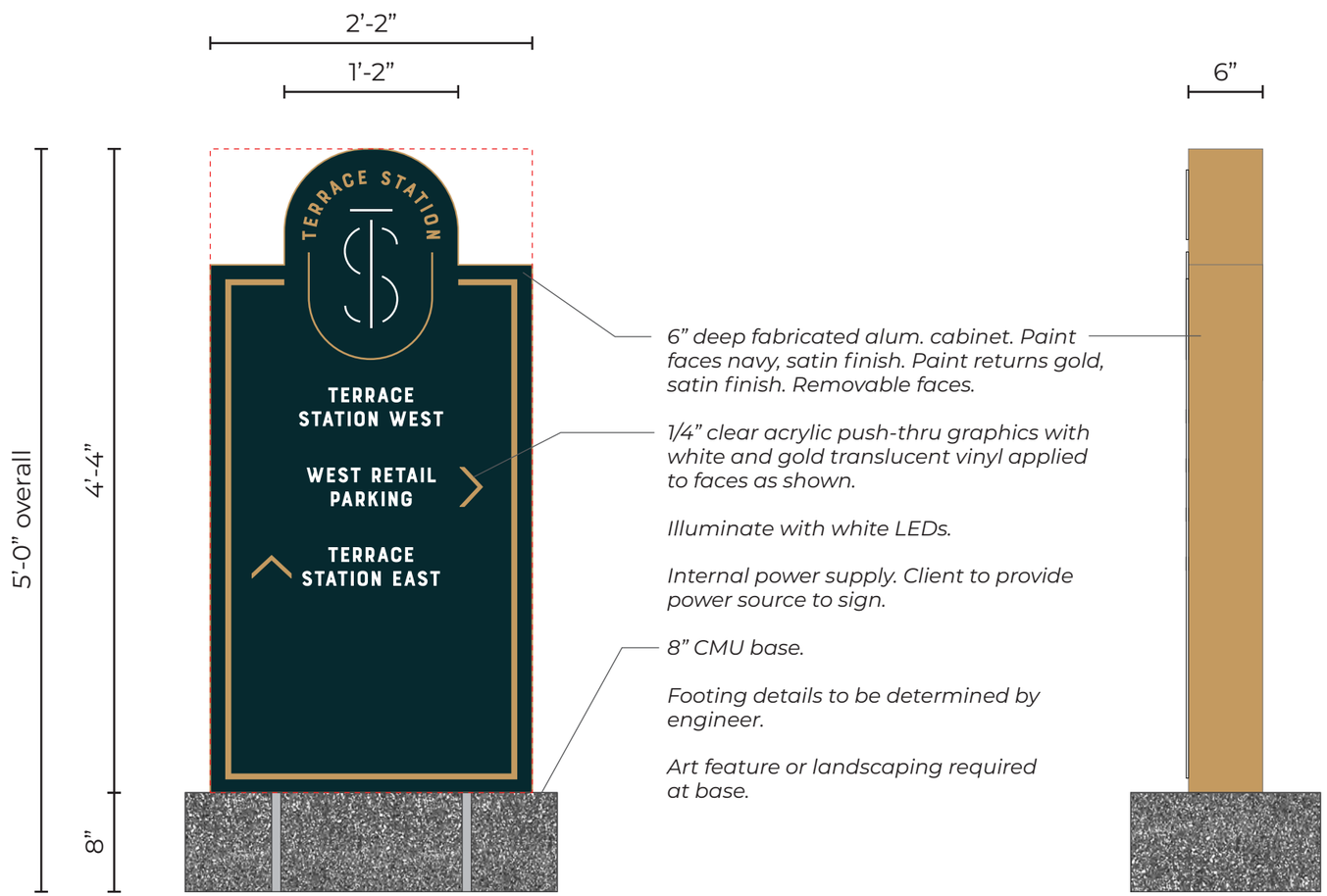

Sign D-S66: *Manufacture & install (1) single face illuminated monument sign with push through graphics.*

Sign Area: 9.4 Square Feet

CLIENT TO PROVIDE
20 AMP / 120 VOLT
DEDICATED SIGN CIRCUIT WITHIN
6 FT OF SIGN LOCATION

A DESIGN STUDIO

MAIN CONTACT
Gracia Mueller
360.929.3077

CREATIVE
Jaclyn Veasley
425.890.6251

Additional information:
adesignstudioseattle.com

Follow us on social:
@adesignstudioseattle

COPYRIGHT
All artwork contained herein is the copyrighted property of A Design Studio Seattle. This includes, but is not limited to, logos, specifications, artwork and engineering. Any usage beyond internal reviews shall require our appoval and a separate design fee paid to A Design Studio Seattle. Usage rights can also be purchased (limited or complete) for an additional fee. Any unlawful distribution of said artwork is a violation of federal copyright laws.

PROJECT NAME
Terrace Station

PROJECT #
20-004

ADDRESS
Address Varies
Mountlake Terrace, WA 98043

DATE
08/05/20

VERSION NOTES

V1	07/14 Concept design
V2	07/31 Revise signs
V3	08/06 Revise signs
V4	08/22 Revise signs
V5	10/02 Revise signs
V6	11/19 Revise signs
V7	01/02 Revise signs
V8	02/20 Revise all concepts & signs
V9	02/24 Revise signs
V10	03/19 Add signs, revise narrative
V11	05/19 Add/revise signs, revise all B3
V12	05/22 Revise B3 & directional signs
V13	06/02 Revise B1 canopy details
V14	08/05 Revise per city comments
V15	

PAGE SCALE
1" = 1'-0"

PAGE #
205

D-S71 - PLAN DETAILS

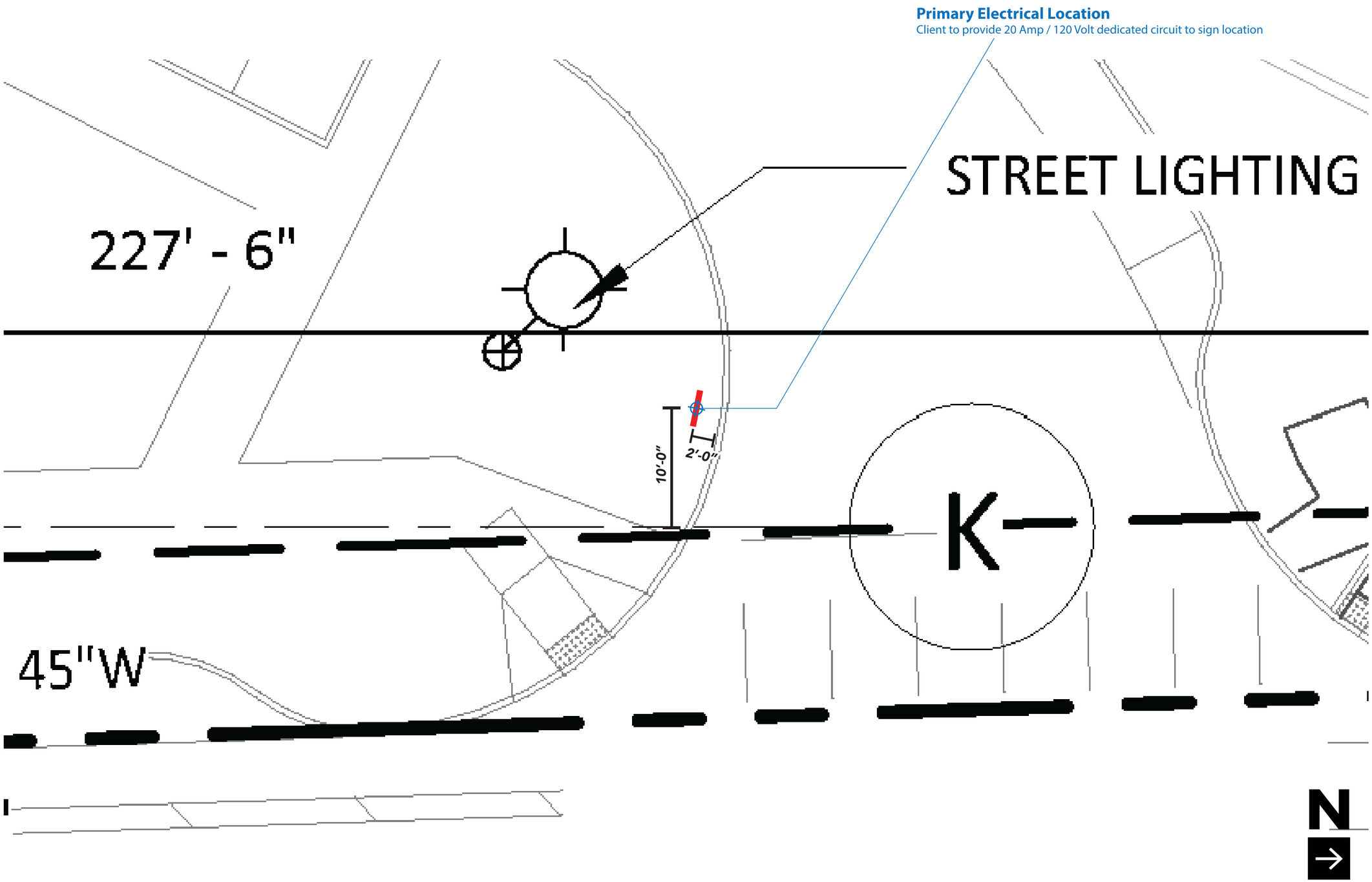

A DESIGN STUDIO

MAIN CONTACT
Gracia Mueller
360.929.3077

CREATIVE
Jaclyn Veasley
425.890.6251

Additional information:
adesignstudioseattle.com

Follow us on social:
@adesignstudioseattle

COPYRIGHT
All artwork contained herein is the copyrighted property of A Design Studio Seattle. This includes, but is not limited to, logos, specifications, artwork and engineering. Any usage beyond internal reviews shall require our appoval and a separate design fee paid to A Design Studio Seattle. Usage rights can also be purchased (limited or complete) for an additional fee. Any unlawful distribution of said artwork is a violation of federal copyright laws.

PROJECT NAME
Terrace Station

PROJECT #
20-004

ADDRESS
Address Varies
Mountlake Terrace, WA 98043

DATE
08/05/20

VERSION NOTES

V1	07/14 Concept design
V2	07/31 Revise signs
V3	08/06 Revise signs
V4	08/22 Revise signs
V5	10/02 Revise signs
V6	11/19 Revise signs
V7	01/02 Revise signs
V8	02/20 Revise all concepts & signs
V9	02/24 Revise signs
V10	03/19 Add signs, revise narrative
V11	05/19 Add/revise signs, revise all B3
V12	05/22 Revise B3 & directional signs
V13	06/02 Revise B1 canopy details
V14	08/05 Revise per city comments
V15	

PAGE SCALE
1/8" = 1'-0"

PAGE #

D-S72 & D-S73 - DETAILS

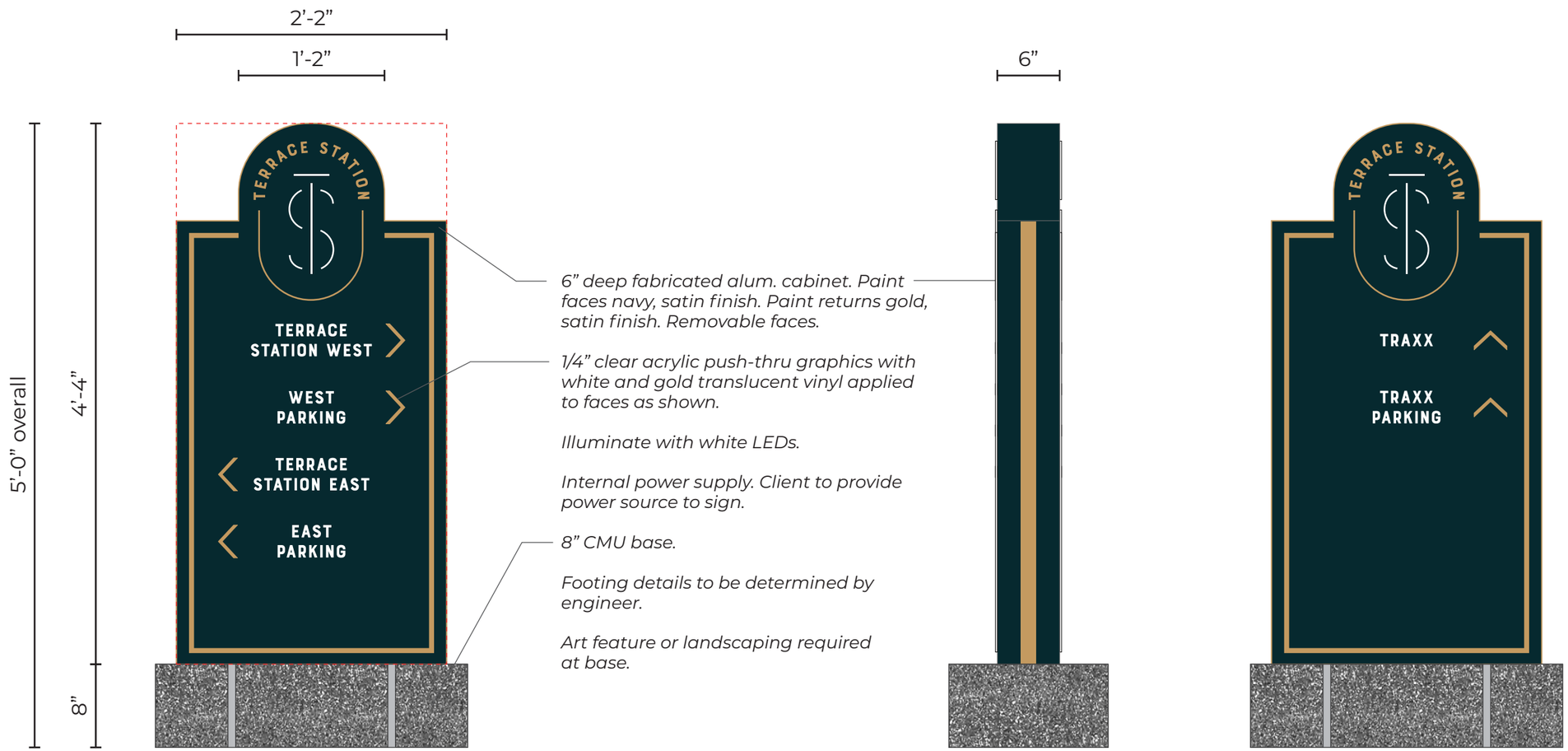

North Face View ***End View*** ***South Face View***

Signs D-S67 & D-S68: *Manufacture & install (2) double face illuminated monument signs with push through graphics.*

Sign Area: 9.4 Square Feet

CLIENT TO PROVIDE
20 AMP / 120 VOLT
DEDICATED SIGN CIRCUIT WITHIN
6 FT OF SIGN LOCATION

A DESIGN STUDIO

MAIN CONTACT
Gracia Mueller
360.929.3077

CREATIVE
Jaclyn Veasley
425.890.6251

Additional information:
adesignstudioseattle.com

Follow us on social:
@adesignstudioseattle

COPYRIGHT
All artwork contained herein is the copyrighted property of A Design Studio Seattle. This includes, but is not limited to, logos, specifications, artwork and engineering. Any usage beyond internal reviews shall require our appoval and a separate design fee paid to A Design Studio Seattle. Usage rights can also be purchased (limited or complete) for an additional fee. Any unlawful distribution of said artwork is a violation of federal copyright laws.

PROJECT NAME
Terrace Station

PROJECT #
20-004

ADDRESS
Address Varies
Mountlake Terrace, WA 98043

DATE
08/05/20

VERSION NOTES

V1	07/14 Concept design
V2	07/31 Revise signs
V3	08/06 Revise signs
V4	08/22 Revise signs
V5	10/02 Revise signs
V6	11/19 Revise signs
V7	01/02 Revise signs
V8	02/20 Revise all concepts & signs
V9	02/24 Revise signs
V10	03/19 Add signs, revise narrative
V11	05/19 Add/revise signs, revise all B3
V12	05/22 Revise B3 & directional signs
V13	06/02 Revise B1 canopy details
V14	08/05 Revise per city comments
V15	

PAGE SCALE
1" = 1'-0"

PAGE #
207

D-S72 - PLAN DETAILS

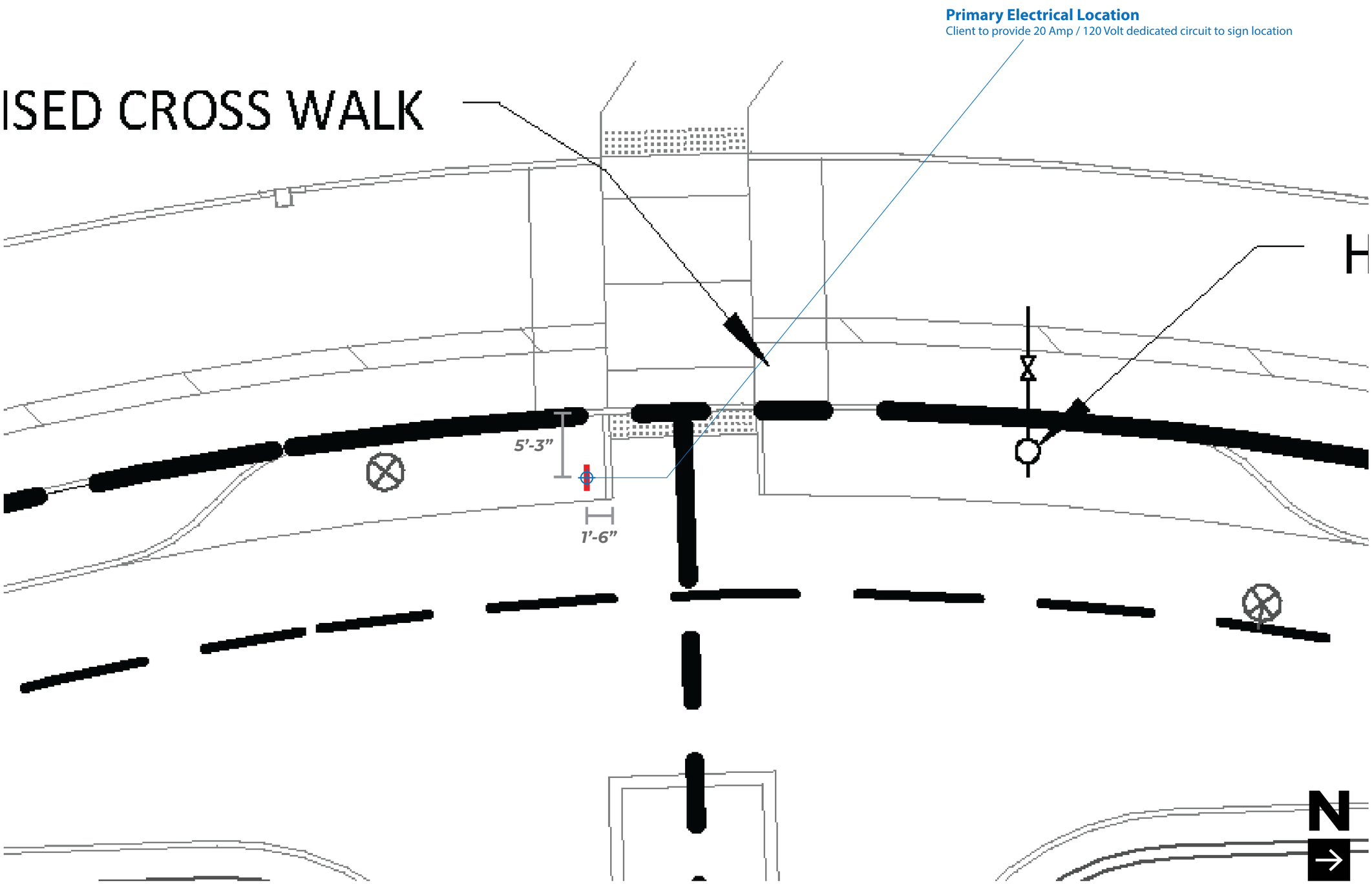

A DESIGN STUDIO

MAIN CONTACT
Gracia Mueller
360.929.3077

CREATIVE
Jaclyn Veasley
425.890.6251

Additional information:
adesignstudioseattle.com

Follow us on social:
@adesignstudioseattle

COPYRIGHT
All artwork contained herein is the copyrighted property of A Design Studio Seattle. This includes, but is not limited to, logos, specifications, artwork and engineering. Any usage beyond internal reviews shall require our appoval and a separate design fee paid to A Design Studio Seattle. Usage rights can also be purchased (limited or complete) for an additional fee. Any unlawful distribution of said artwork is a violation of federal copyright laws.

PROJECT NAME
Terrace Station

PROJECT #
20-004

ADDRESS
Address Varies
Mountlake Terrace, WA 98043

DATE
08/05/20

VERSION NOTES

V1	07/14 Concept design
V2	07/31 Revise signs
V3	08/06 Revise signs
V4	08/22 Revise signs
V5	10/02 Revise signs
V6	11/19 Revise signs
V7	01/02 Revise signs
V8	02/20 Revise all concepts & signs
V9	02/24 Revise signs
V10	03/19 Add signs, revise narrative
V11	05/19 Add/revise signs, revise all B3
V12	05/22 Revise B3 & directional signs
V13	06/02 Revise B1 canopy details
V14	08/05 Revise per city comments
V15	

PAGE SCALE
1/8" = 1'-0"

PAGE #

D-S73 - PLAN DETAILS

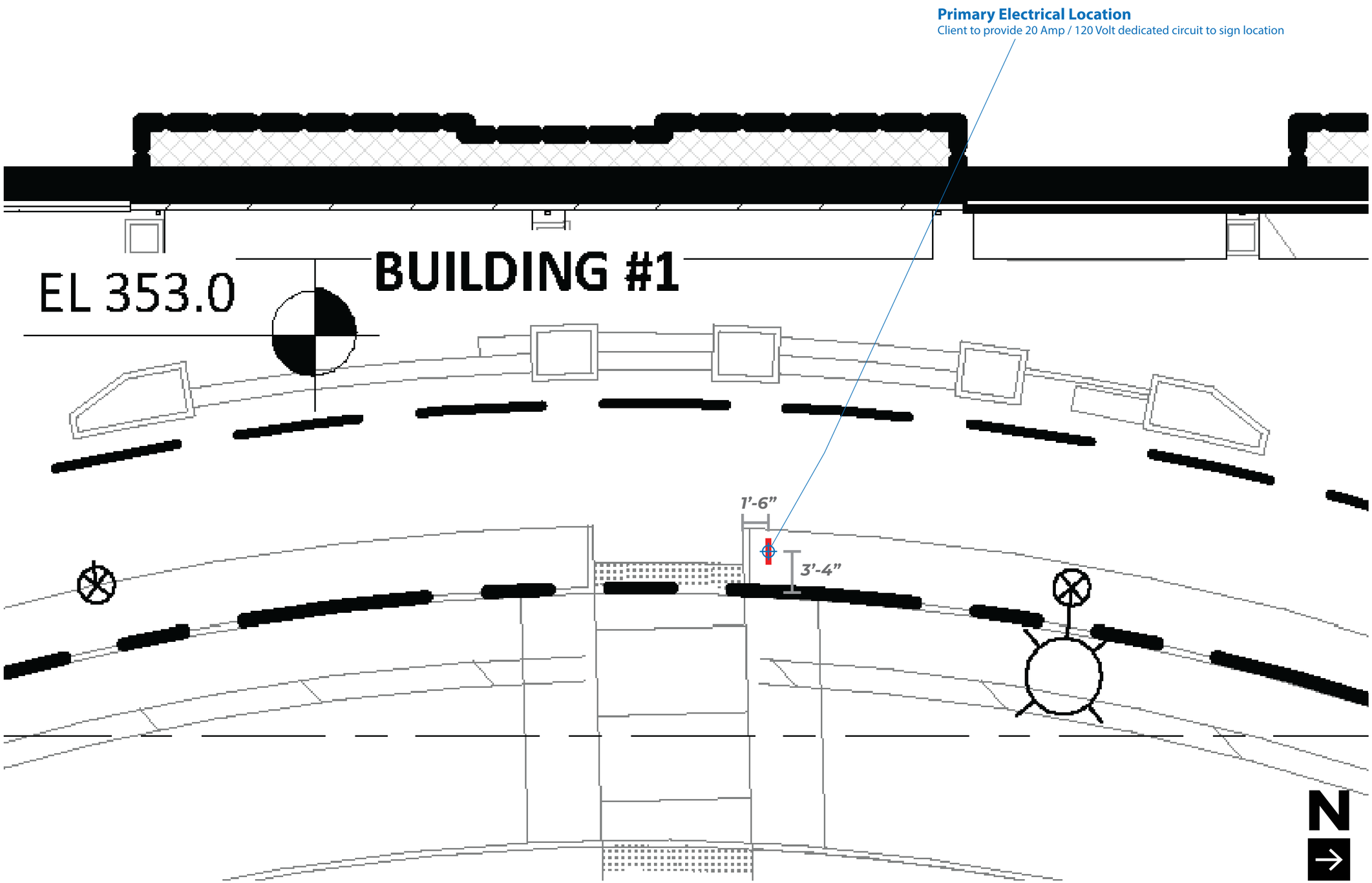

A DESIGN STUDIO

MAIN CONTACT
Gracia Mueller
360.929.3077

CREATIVE
Jaclyn Veasley
425.890.6251

Additional information:
adesignstudioseattle.com

Follow us on social:
@adesignstudioseattle

COPYRIGHT
All artwork contained herein is the copyrighted property of A Design Studio Seattle. This includes, but is not limited to, logos, specifications, artwork and engineering. Any usage beyond internal reviews shall require our appoval and a separate design fee paid to A Design Studio Seattle. Usage rights can also be purchased (limited or complete) for an additional fee. Any unlawful distribution of said artwork is a violation of federal copyright laws.

PROJECT NAME
Terrace Station

PROJECT #
20-004

ADDRESS
Address Varies
Mountlake Terrace, WA 98043

DATE
08/05/20

VERSION NOTES

V1	07/14 Concept design
V2	07/31 Revise signs
V3	08/06 Revise signs
V4	08/22 Revise signs
V5	10/02 Revise signs
V6	11/19 Revise signs
V7	01/02 Revise signs
V8	02/20 Revise all concepts & signs
V9	02/24 Revise signs
V10	03/19 Add signs, revise narrative
V11	05/19 Add/revise signs, revise all B3
V12	05/22 Revise B3 & directional signs
V13	06/02 Revise B1 canopy details
V14	08/05 Revise per city comments
V15	

PAGE SCALE
1/8" = 1'-0"

PAGE #

D-S74, D-S75, D-S76, & D-S77 - DETAILS

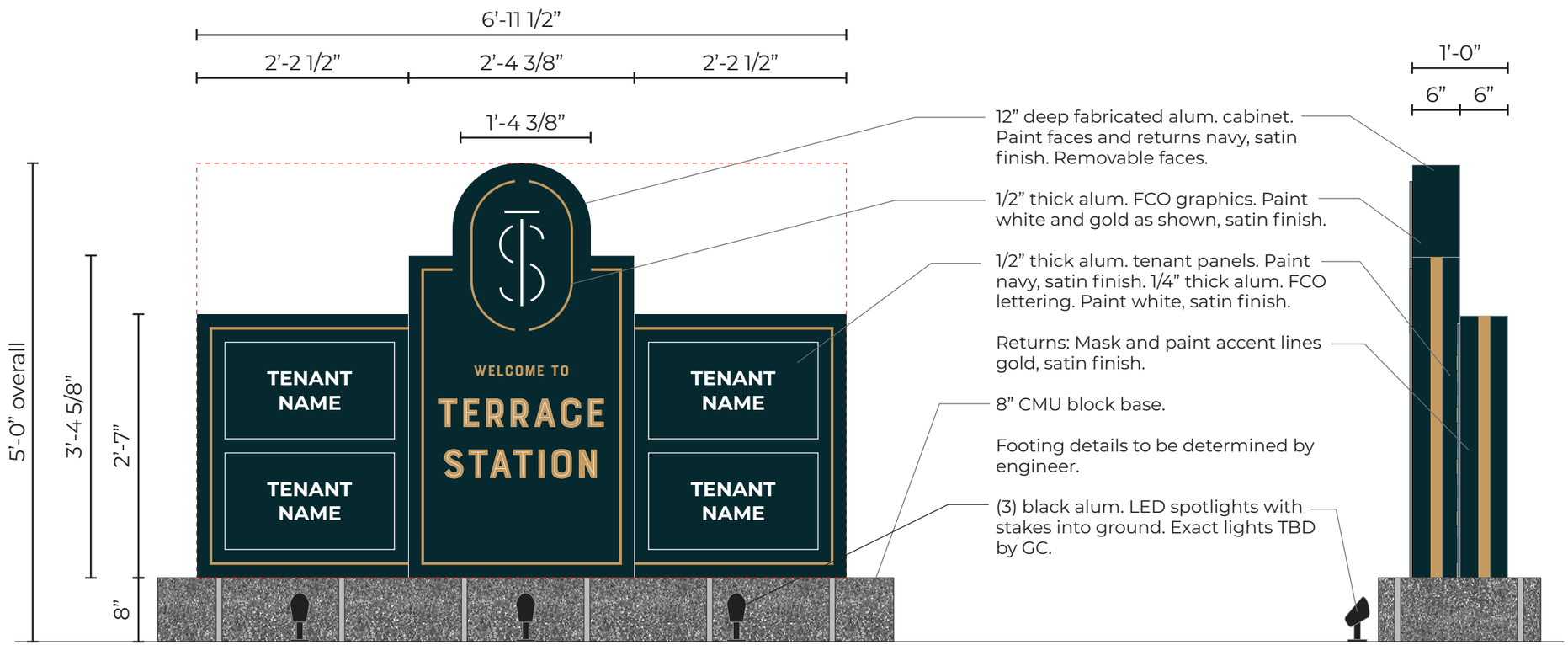

Face View

End View

Sign D-S74, D-S75, D-S76, & D-S77: *Manufacture & install (4) single faced non-illuminated monument signs with tenant panels*

Sign Area: 29.4 Square Feet

LED Spotlight Details (NTS)

A DESIGN STUDIO

MAIN CONTACT
Gracia Mueller
360.929.3077

CREATIVE
Jaclyn Veasley
425.890.6251

Additional information:
adesignstudioseattle.com

Follow us on social:
@adesignstudioseattle

COPYRIGHT
All artwork contained herein is the copyrighted property of A Design Studio Seattle. This includes, but is not limited to, logos, specifications, artwork and engineering. Any usage beyond internal reviews shall require our appoval and a separate design fee paid to A Design Studio Seattle. Usage rights can also be purchased (limited or complete) for an additional fee. Any unlawful distribution of said artwork is a violation of federal copyright laws.

PROJECT NAME
Terrace Station

PROJECT #
20-004

ADDRESS
Address Varies
Mountlake Terrace, WA 98043

DATE
08/05/20

VERSION NOTES

V1	07/14 Concept design
V2	07/31 Revise signs
V3	08/06 Revise signs
V4	08/22 Revise signs
V5	10/02 Revise signs
V6	11/19 Revise signs
V7	01/02 Revise signs
V8	02/20 Revise all concepts & signs
V9	02/24 Revise signs
V10	03/19 Add signs, revise narrative
V11	05/19 Add/revise signs, revise all B3
V12	05/22 Revise B3 & directional signs
V13	06/02 Revise B1 canopy details
V14	08/05 Revise per city comments
V15	

PAGE SCALE
3/4” = 1’-0”

PAGE #
210

D-S74 - PLAN DETAILS

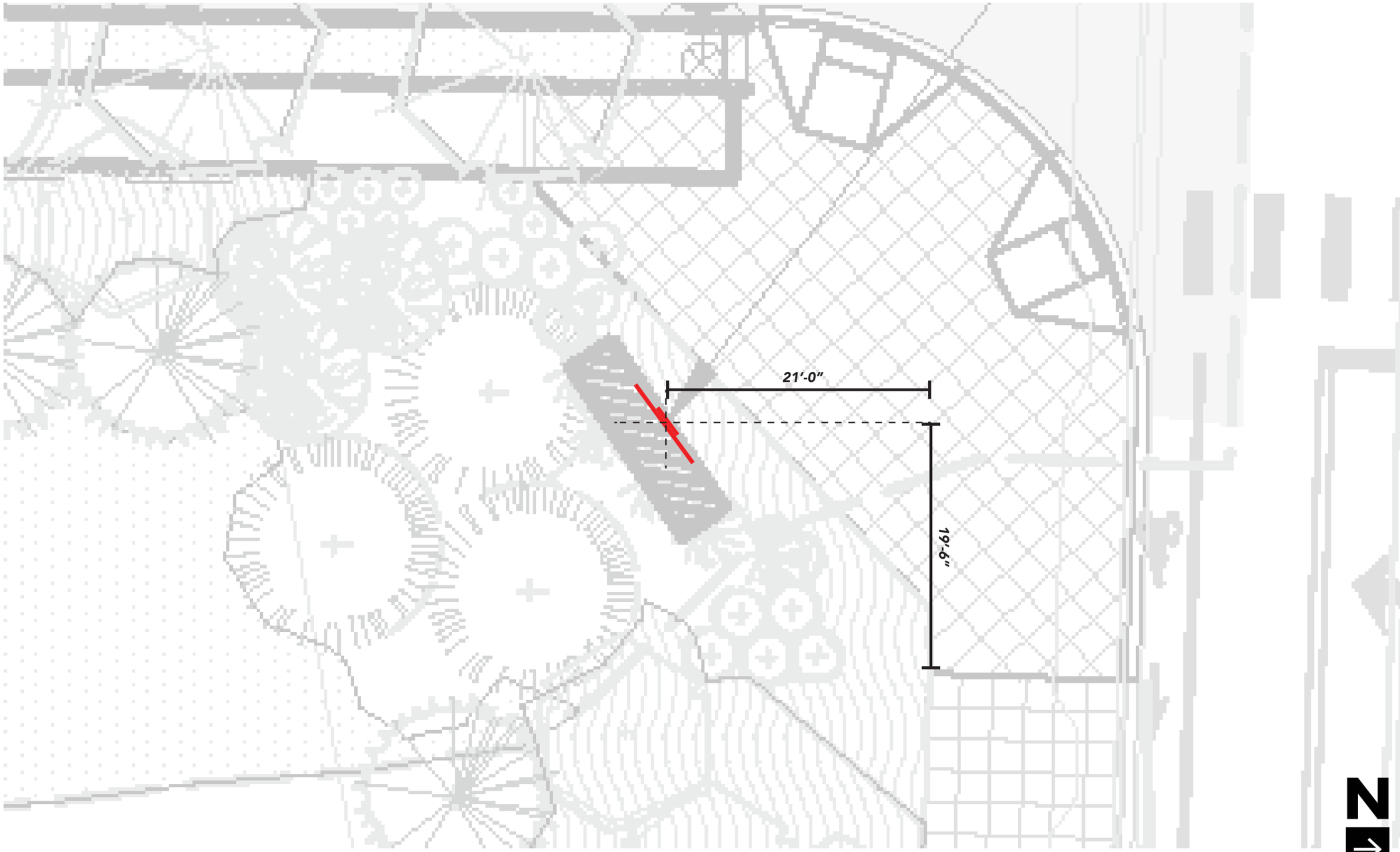

A DESIGN STUDIO

MAIN CONTACT
Gracia Mueller
360.929.3077

CREATIVE
Jaclyn Veasley
425.890.6251

Additional information:
adesignstudioseattle.com

Follow us on social:
@adesignstudioseattle

COPYRIGHT
All artwork contained herein is the copyrighted property of A Design Studio Seattle. This includes, but is not limited to, logos, specifications, artwork and engineering. Any usage beyond internal reviews shall require our appoval and a separate design fee paid to A Design Studio Seattle. Usage rights can also be purchased (limited or complete) for an additional fee. Any unlawful distribution of said artwork is a violation of federal copyright laws.

PROJECT NAME
Terrace Station

PROJECT #
20-004

ADDRESS
Address Varies
Mountlake Terrace, WA 98043

DATE
08/05/20

VERSION NOTES

V1	07/14 Concept design
V2	07/31 Revise signs
V3	08/06 Revise signs
V4	08/22 Revise signs
V5	10/02 Revise signs
V6	11/19 Revise signs
V7	01/02 Revise signs
V8	02/20 Revise all concepts & signs
V9	02/24 Revise signs
V10	03/19 Add signs, revise narrative
V11	05/19 Add/revise signs, revise all B3
V12	05/22 Revise B3 & directional signs
V13	06/02 Revise B1 canopy details
V14	08/05 Revise per city comments
V15	

PAGE SCALE
1/8" = 1'-0"

PAGE #

D-S75 - PLAN DETAILS

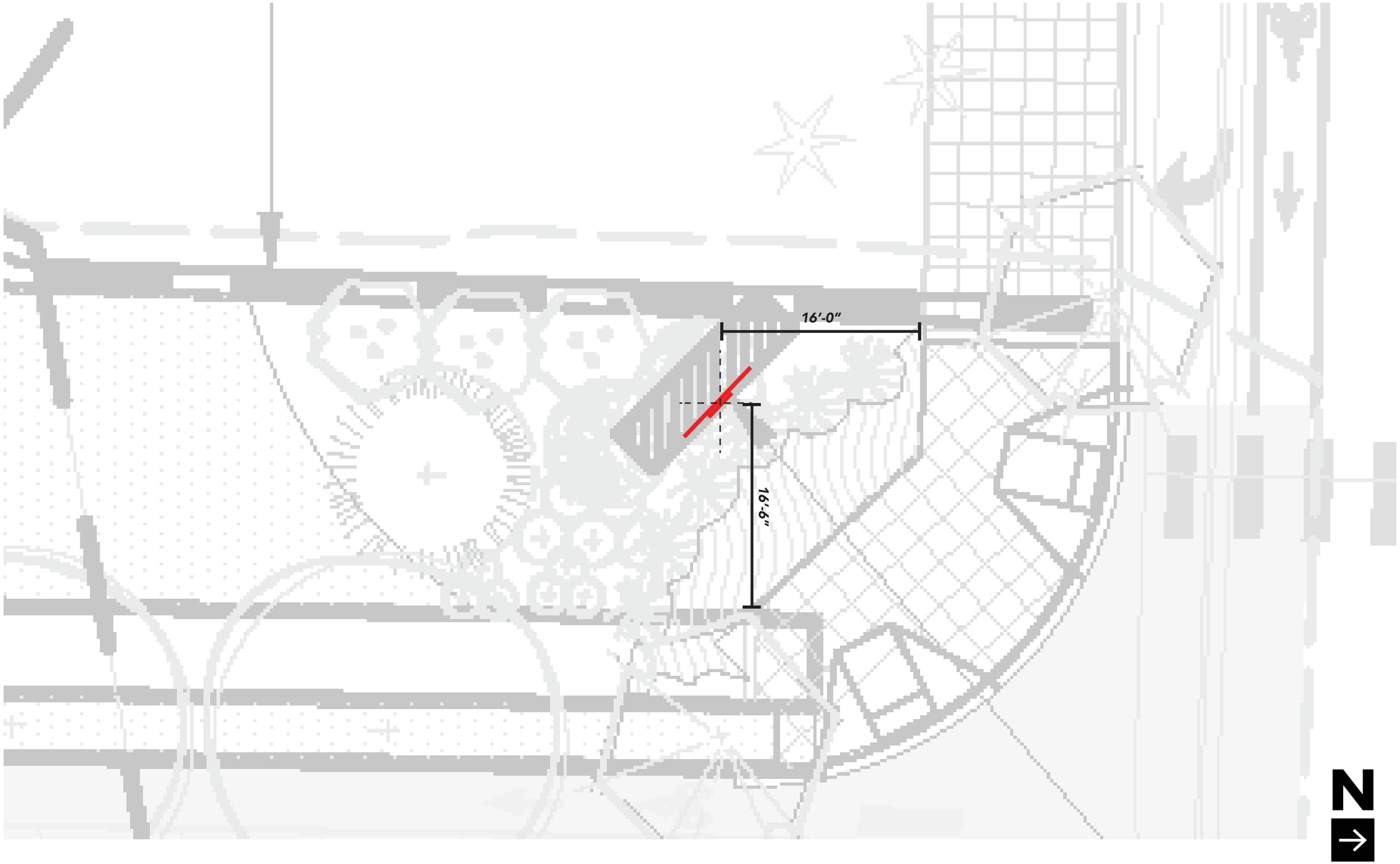

A DESIGN STUDIO

MAIN CONTACT
Gracia Mueller
360.929.3077

CREATIVE
Jaclyn Veasley
425.890.6251

Additional information:
adesignstudioseattle.com

Follow us on social:
@adesignstudioseattle

COPYRIGHT
All artwork contained herein is the copyrighted property of A Design Studio Seattle. This includes, but is not limited to, logos, specifications, artwork and engineering. Any usage beyond internal reviews shall require our appoval and a separate design fee paid to A Design Studio Seattle. Usage rights can also be purchased (limited or complete) for an additional fee. Any unlawful distribution of said artwork is a violation of federal copyright laws.

PROJECT NAME
Terrace Station

PROJECT #
20-004

ADDRESS
Address Varies
Mountlake Terrace, WA 98043

DATE
08/05/20

VERSION NOTES

V1	07/14 Concept design
V2	07/31 Revise signs
V3	08/06 Revise signs
V4	08/22 Revise signs
V5	10/02 Revise signs
V6	11/19 Revise signs
V7	01/02 Revise signs
V8	02/20 Revise all concepts & signs
V9	02/24 Revise signs
V10	03/19 Add signs, revise narrative
V11	05/19 Add/revise signs, revise all B3
V12	05/22 Revise B3 & directional signs
V13	06/02 Revise B1 canopy details
V14	08/05 Revise per city comments
V15	

PAGE SCALE
1/8" = 1'-0"

PAGE #

D-S76 - PLAN DETAILS

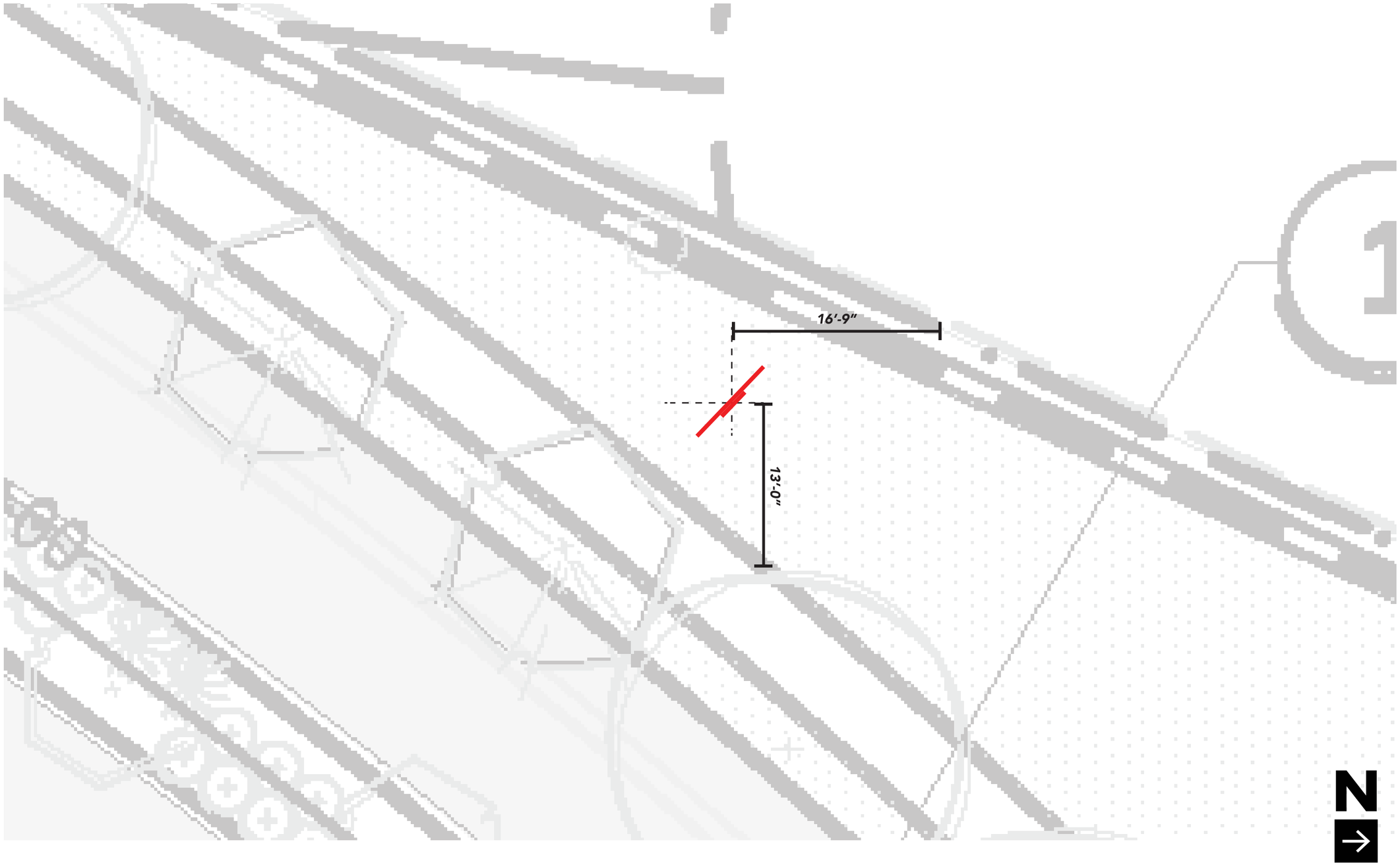

A DESIGN STUDIO

MAIN CONTACT
Gracia Mueller
360.929.3077

CREATIVE
Jaclyn Veasley
425.890.6251

Additional information:
adesignstudioseattle.com

Follow us on social:
@adesignstudioseattle

COPYRIGHT
All artwork contained herein is the copyrighted property of A Design Studio Seattle. This includes, but is not limited to, logos, specifications, artwork and engineering. Any usage beyond internal reviews shall require our appoval and a separate design fee paid to A Design Studio Seattle. Usage rights can also be purchased (limited or complete) for an additional fee. Any unlawful distribution of said artwork is a violation of federal copyright laws.

PROJECT NAME
Terrace Station

PROJECT #
20-004

ADDRESS
Address Varies
Mountlake Terrace, WA 98043

DATE
08/05/20

VERSION NOTES

V1	07/14 Concept design
V2	07/31 Revise signs
V3	08/06 Revise signs
V4	08/22 Revise signs
V5	10/02 Revise signs
V6	11/19 Revise signs
V7	01/02 Revise signs
V8	02/20 Revise all concepts & signs
V9	02/24 Revise signs
V10	03/19 Add signs, revise narrative
V11	05/19 Add/revise signs, revise all B3
V12	05/22 Revise B3 & directional signs
V13	06/02 Revise B1 canopy details
V14	08/05 Revise per city comments
V15	

PAGE SCALE
1/8" = 1'-0"

PAGE #

D-S77 - PLAN DETAILS

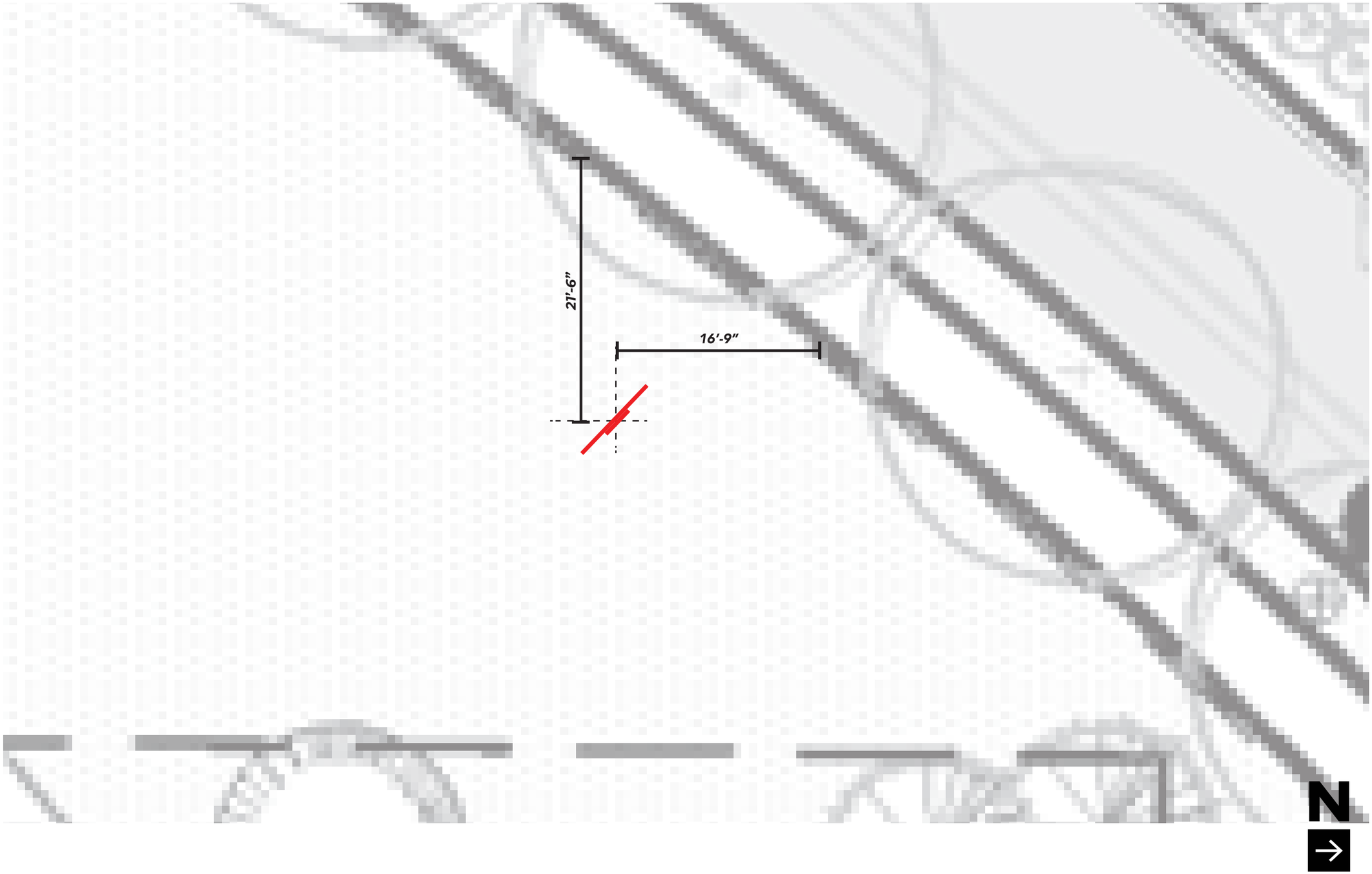

A DESIGN STUDIO

MAIN CONTACT
Gracia Mueller
360.929.3077

CREATIVE
Jaclyn Veasley
425.890.6251

Additional information:
adesignstudioseattle.com

Follow us on social:
@adesignstudioseattle

COPYRIGHT
All artwork contained herein is the copyrighted property of A Design Studio Seattle. This includes, but is not limited to, logos, specifications, artwork and engineering. Any usage beyond internal reviews shall require our appoval and a separate design fee paid to A Design Studio Seattle. Usage rights can also be purchased (limited or complete) for an additional fee. Any unlawful distribution of said artwork is a violation of federal copyright laws.

PROJECT NAME
Terrace Station

PROJECT #
20-004

ADDRESS
Address Varies
Mountlake Terrace, WA 98043

DATE
08/05/20

VERSION NOTES

V1	07/14 Concept design
V2	07/31 Revise signs
V3	08/06 Revise signs
V4	08/22 Revise signs
V5	10/02 Revise signs
V6	11/19 Revise signs
V7	01/02 Revise signs
V8	02/20 Revise all concepts & signs
V9	02/24 Revise signs
V10	03/19 Add signs, revise narrative
V11	05/19 Add/revise signs, revise all B3
V12	05/22 Revise B3 & directional signs
V13	06/02 Revise B1 canopy details
V14	08/05 Revise per city comments
V15	

PAGE SCALE
1/8" = 1'-0"

PAGE #

DEVELOPMENT AGREEMENT BY AND BETWEEN THE CITY OF MOUNTLAKE TERRACE AND WHISKEY 6, LLC

THIS DEVELOPMENT AGREEMENT ("Agreement") is made and entered into this ____ day of_____, 2026, by and between the **CITY OF MOUNTLAKE TERRACE**, a Washington municipal corporation, hereinafter the "City," and **WHISKEY 6, LLC,** a limited liability company organized under the laws of the State of Washington, hereinafter the "Developer," collectively known as "Parties" and each individually referenced as "Party."

RECITALS

A. Developer owns or controls real property located within the City identified as Lot 2 (the "Property"), legally described in Exhibit A. This Agreement relates to the development of the Property.

B. The Property is located within the City's Town Center, Gateway Mixed Use, and Neighborhood Mixed Use Comprehensive Plan land use designations and is subject to a proposed zoning map amendment.

C. Developer proposes a residential development on the Property consisting of one building, structured parking, open space and associated improvements (the "Project"), as generally depicted on Exhibit B (Conceptual Site Plans).

D. The City and Developer wish to enter into this Agreement pursuant to RCW 36.70B.170–.210 to establish development standards applicable to the Project.

E. This Agreement was considered and recommended for approval by majority vote of the Planning Commission after a public hearing conducted on **[DATE].**

F. This Agreement was considered and approved by majority vote of the City Council on **[DATE]**, after which the City Council authorized the City Manager to sign this Agreement.

G. RCW 36.70B.170 authorizes the execution of a development agreement between a local government and a person having ownership or control of real property within its jurisdiction.

H. A development agreement must set forth the development standards and other provisions that shall apply to, govern and vest the development, use, and mitigation of Property for the duration specified in the agreement.

Now, therefore, the Parties hereto agree as follows:

GENERAL PROVISIONS

1. The Property. The Property consists of 42,549 square feet and is legally described in Exhibit A, attached hereto and incorporated herein by this reference.

2. The Project. The Project, referenced as "Terrace Station 5" is the development and use of the Property contemplated in this Agreement and as generally depicted on Exhibit B, attached hereto and incorporated herein by this reference.

3. Application Review Order. Developer shall submit applications in the following order. After receipt of complete applications pursuant to Mountlake Terrace Municipal Code ("MTMC") 18.05, the City shall review and issue decisions on such complete applications in the same order.

A. Lot Line Adjustment/Consolidation[1]

B. Zoning Map Amendment[1]

C. Binding Site Plan Amendment (regarding proposal to remove 60' tree buffer on the Project Site) [2]

D. Terrace Station 5 Site Development Plan[3]

E. Terrace Station 5 Critical Area Report[3]

F. Terrace Station 5 SEPA Application (combined with rezone)[3]

G. Terrace Station 5 Civil Permits[4]

H. Terrace Station 5 Building Permits[4]

Applications are labeled in the order that they shall be submitted by Developer. Applications with the same number following their name as indicated above (e.g., [1, 2, 3, or 4]) may be reviewed concurrently.

4. Definitions. As used in this Agreement, the following terms, phrases and words shall have the meanings and be interpreted as set forth in this Section.

A. "Adopting Ordinance" means the ordinance which approves this Development Agreement, as required by RCW 36.70B.200.

B. "Building Height" means the vertical distance measured from the grade point around the building to the highest point of a flat roof; to the deck line of a mansard roof; and to the midpoint of a pitched roof (i.e., gable, hip, or gambrel roofs). Specifically excluded from this definition, and from the regulations of maximum building height, are structural elements not intended for habitation and not exceeding 15 feet above the maximum height such as poles, housing/screens for

mechanical and elevator equipment, smoke and public ventilation stacks/fans, skylights, solar panels, tanks, and public utility and transmission line towers.

C. “Design Guidelines” means the Mountlake Terrace Design Standards as set forth in Chapter 19.123 of the MTMC.

D. “Developer” means Whiskey 6, LLC, a Washington limited liability company, or its successors and assigns as authorized by Section 19 below.

E. “Development Applications” means applications for the permits and approvals identified in Section 3 above, and any other applications and permits required by law for the development of the Property.

F. “Development Standards” includes, but are not limited to, all of the standards listed in RCW 36.70B.170(3) and any others included in Existing Land Use Regulations below.

G. “Director” means the director of the Community Development Director or designee.

H. “Effective Date” means the effective date of the Adopting Ordinance.

I. “Existing Land Use Regulations” means the ordinances adopted by the City Council of Mountlake Terrace in effect on the Effective Date, including the adopted ordinances, whether or not codified in the MTMC, that govern the permitted uses of land, the density and intensity of use, and the design, improvement, construction standards and specifications applicable to the development of the Property, including, but not limited to the Comprehensive Plan, the City’s Official Zoning Map and development standards, the Design Standards, the Public Works Standards, Engineering Development Manual and related engineering standards, SEPA, Concurrency Ordinance, and all other ordinances, codes, rules and regulations of the City establishing subdivision standards, and park regulations. This definition of Existing Land Use Regulations does not include non-land use regulations, which include taxes and impact fees.

J. "Grade point" means an elevation point representing the average elevation of the finished ground level adjoining the building at all exterior walls. Where the finished ground level slopes away from the exterior walls, the grade point is the average of the lowest elevation points within the area between the building and the lot line or, where the lot line is more than six feet from the building, between the building and the lowest elevation points within six feet of the building. For U-shaped buildings and for buildings with enclosed or "donut hole" inner courtyards, the grade points within the "U" or within the inner courtyard are not included in the grade point calculation.

K. “Project Site” means the lot on which Terrace Station 5 is located, depicted as Lot 2 on Boundary Line Adjustment (“BLA”) application no. P-BL-26-0005.

5. Exhibits. The following exhibits are attached to this Agreement and incorporated herein:

A. Legal Description;

B. Conceptual Site Plan & Conceptual Building Renderings

C. Gateway TOD Comprehensive Sign Plan

D. Chapter 16.15 MTMC Critical Areas

E. Chapter 16.20 MTMC Stormwater

F. Chapter 18.05 MTMC Administration and Procedures

G. Chapter 19.15 MTMC Definitions

H. Chapter 19.50 MTMC Town Center Zones

I. Chapter 19.95 MTMC Transportation Code

J. Chapter 19.123 MTMC Town Center Design Standards

K. Chapter 19.125 MTMC Off-street Parking and Loading

L. Chapter 19.126 MTMC Electrical Vehicle Infrastructure

M. Chapter 19.130 MTMC Landscape Development and Site Buffering

N. 2026 Engineering Development Manual

6. General Project Description. The Project is generally depicted on Exhibit B as a transit-oriented development southeast of the intersection of 236th St. SW and Van Ry Blvd. As proposed:

A. The site plan includes one residential building (Terrace Station 5), open space, and a private drive between 237th St. SW and Van Ry Blvd.;

C. Terrace Station 5 will be a new 6-story multifamily residential building with direct access to and near the Mountlake Terrace Transit Station; and

D. Van Ry Blvd., and 237th St. SW will provide access to the Project. A new private drive between 237th St. SW to Van Ry Blvd. will be constructed.

E. An open space area with enhanced landscaping will be constructed on Lot 2 as currently described on Exhibit A to provide the community, including residents, with outdoor public space and amenities including suitable and usable areas for leisure and/or recreation activities.

F. Terrace Station 5 includes a stormwater detention vault that will serve as the detention vault for both Terrace Station 5 and a separate project subject to separate applications known as Terrace Station 4. The detention vault shall be built on Lot 2 under Terrace Station 5 as Lot 2 is depicted on BLA application no. P-BL-26-0005. The detention vault must be completed and operational consistent with City code prior to the issuance of required land use approvals and certificates of occupancy for Terrace Station 4.

7. **Specific Project Description.**

A. **Zoning standards.** Terrace Station 5 shall comply with Town Center 1 zoning requirements and design standards as set forth in Chapter 19.50 and 19.123 MTMC, except Terrace Station 5 shall not exceed a maximum building height of six stories. The height maximum is consistent with the Comprehensive Plan vision for the Neighborhood Mixed Use land use designations.

1. **Block Frontage Standards.** Landscape block frontage standards per MTMC 19.123.100 shall apply to the development facing the Van Ry Blvd. frontage. The area to the west of the building is considered the front yard setback. A minimum 10-foot setback is required from Van Ry Blvd, which is the front yard setback.

2. **Side and rear yard setbacks.** The side and rear yards are located to the north, east, and south of the proposed building. The minimum side and rear yard setbacks will be five feet, except zero feet is allowed for windowless firewalls up to six stories in height.

3. **Building Separation.** Building separation requirements are set forth in Title 15 MTMC, including the International Building Code and International Fire Code.

B. **Parking.** Parking requirements for the Project shall comply with MTMC 19.50.090 Tier 1 parking standards and as further provided in this Section 7.B:

1. **Required Vehicle Parking Spaces.** Tier 1 parking standards are as follows for multi-household residential development:

Studio	0.50 spaces
1-bedroom	0.75 spaces
2-bedroom	1.0 spaces
3-bedrooms or more	1.25 spaces

2. **Parking Reduction.** A twenty-five percent reduction of the required Tier 1 parking requirements will be granted for Terrace Station 5, if the building provides some or all of the Transportation Demand Management (TDM) Programs listed below due to proximity to transit and demonstration of reduced parking demand.

   TDM programs include vanpools, fleet ride, subscription bus, regular transit subsidy, and parking management programs such as carpooling; provided, that the applicant demonstrates that the use of these programs is likely to correspondingly reduce the need for the minimum number of parking spaces otherwise required.

2. **Tandem Parking.** Tandem parking is permitted without an attendant, subject to a parking management plan approved by the Director.

C. **Open Space:** Open Space requirements for the Project shall comply with MTMC 19.123.190. A minimum of usable open space equal to 100 square feet per dwelling unit for studio and one-bedroom dwellings and 150 square feet per dwelling unit for dwelling with two or more bedrooms is required. Additional open space standards are set forth in this Section 7.C:

1. **Compliance.** Open space requirements may be satisfied as follows:

   - Up to 100% of the total open space requirement may comprise shared open space;
   - Up to 100% of the total open space requirement for an individual ground-level unit may comprise open space that is directly accessible to the subject unit and otherwise satisfies the requirements of MTMC 19.123.190(B)(1)(b);
   - Up to 25% of the total open space requirement may comprise balconies;
   - Up to 50% of the total open space requirement may comprise Common Indoor Recreation Areas; and/or
   - Up to 50% of the total open space requirement may comprise shared roof decks.

   All such open space shall be located within Project Site or on an adjacent site subject to Developer's execution and recording of a perpetual public open space easement in a form acceptable to the City.

2. **Improvements.** Improvements may include landscaping, seating, gardens, entrance plazas, decks, children's play areas, pools, water features, and pedestrian amenities. The open space shall create usable space that is suitable as reasonably determined by the Director for leisure or recreational activities for residents and shall contribute to the residential setting.

3. **Maintenance.** Maintenance responsibility for all open space and related improvements shall run with the Property.

D. **Landscaping and Trees:**

1. **Tree Replacement.** Tree removal and replacement requirements are set forth in MTMC Chapter 19.130, including the tree replacement fee-in-lieu provisions of MTMC 19.130.195.

E. **Public Improvements:** Public Improvement requirements for the Project shall comply with Chapter 19.95 MTMC and as further provided in this Section 7.E and Section 7.G.1:

1. **Frontage Improvements.** Developer shall construct all frontage improvements along all site frontages consistent with the 2026 Engineering Development Manual set forth at MTMC Chapter 19.95 and Town Center Standards set forth at MTMC Chapter 19.50 and 19.123. Frontage Improvements at the end of the public portion of 237th St. SW shall consist of concrete driveway approaches into the Project with sidewalks and curbs that terminate at adjacent property lines.

2. **Traffic Improvements.** Developer shall prepare a Traffic Impact Analysis ("TIA") for City review and approval. The TIA shall analyze and describe design options for vehicle turning movements for vehicles turning south onto Van Ry Blvd. east onto 237th St. SW. Any required traffic improvements to the 237th St. SW and 58th Ave. W will be detailed in the TIA, including calculation of any applicable credit to traffic impact fees pursuant to Chapter 18.30 MTMC.

F. **Access and Easements:** The access road between Van Ry Blvd. and 237th St. SW as depicted on Exhibit B shall be designated a Private Drive and Fire Lane. Prior to dedication of the Public Improvements identified above, Developer shall grant the City a Public Pedestrian Access Easement and Public Vehicular Access Easement in a form acceptable to the City Attorney within the depicted Private Drive area.

G. **Additional Terms:**

1. Unless specifically set forth otherwise in this Agreement, the Project shall comply with all provisions of the Mountlake Terrace Municipal Code.

2. Developer shall cover all utility boxes within and adjacent to the Project site with vinyl art wraps. All such vinyl art wraps shall be reviewed and approved by the City prior to installation, including review by the Community Development Department.

3. Developer to provide pedestrian scale lighting around the exterior of the building and along the eastern sidewalk on Van Ry Blvd., as required by MTMC 19.50.100(J) if photometric design concludes that existing street lighting is not sufficient.

4. The Developer shall provide one or more public-facing artwork installations within the project's shared open space, subject to review and approval by the City. The total cost of the public-facing artwork installation(s), including design, fabrication, transportation, and installation, shall be at least 1% of Terrace Station 5 construction costs, not to exceed One Hundred Thousand Dollars ($100,000.00).

   Prior to installation, the Developer shall submit a Public-Facing Artwork Proposal to the City for review and approval. The proposal shall include, at a minimum:

   - A site plan identifying the location(s) of the proposed public-facing artwork;
   - Scaled drawings, renderings, or elevations depicting the proposed public-facing artwork and its relationship to the surrounding site;
   - Material samples and descriptions of construction methods for the proposed public-facing artwork; and
   - A written narrative describing the proposed public-facing artwork concept and how it contributes to the character and public realm of the project, including:
     - A description of the artist's qualifications, including a résumé, portfolio, or similar documentation of relevant experience.
     - A project budget identifying the estimated costs associated with design, fabrication, installation, and ongoing maintenance of the artwork.
     - A development and implementation schedule, including anticipated fabrication and installation milestones.

   The City may refer the Public Art Proposal to the Arts Advisory Commission for review and recommendation. The City reserves the right to require reasonable modifications to the proposed artwork to ensure consistency with adopted City policies, design objectives, public safety requirements, and maintenance considerations. The artwork shall be in place for the life of the project. The property owner is responsible for maintaining the artwork (or replacing the artwork) as needed.

5. Developer shall submit a Critical Area Report pursuant to MTMC 16.15.200 including a Geotechnical Report pursuant to MTMC 16.15.430(D) for the portions of the Project Site (a) on which Terrace Station 5 will be situated and (b) such additional portion of the Project Site as reasonably determined by the Director to be necessary for a complete Critical Area Report and Geotechnical Report. If such portions of the Project Site are determined to be a Class IV landslide hazard area pursuant to MTMC 16.15.430, Developer shall have the option to submit a complete application for review and decision by the City for a reasonable use exception.

8. Project is a Private Undertaking. The Project is a private development and the City has no interest therein except as set forth in this Agreement or as otherwise authorized in the exercise of its governmental functions.

9. Term of Agreement. This Agreement shall commence upon the Effective Date of the Adopting Ordinance approving this Agreement and shall continue in force for a period of ten (10) years unless extended or terminated as provided in Section 16 herein.

10. Vested Rights of Developer. During the term of this Agreement, the development rights, obligations, terms and conditions specified in the Existing Land Use Regulations and this Agreement are vested in the Developer as set forth in RCW 36.70B.180, subject to the provisions of RCW 36.70B.170(4) or other applicable law. In particular, Developer does not vest to any standards included in the International Building Code or other provisions of the City Building Code codified in MTMC Title 15 or other life, health, and safety codes.

11. Permitted Uses and Development Standards. The permitted uses, the density and intensity of use, the maximum height and size of proposed buildings, the construction, installation and extension of public improvements, development guidelines and standards for development of the Property, shall be those set forth in this Agreement as identified in Section 7 above, the permits and approvals identified herein, and all exhibits incorporated herein.

12. Further Discretionary Actions. Developer acknowledges that the Existing Land Use Regulations contemplate the exercise of further discretion by the City. This discretion may include but is not limited to review of additional permit applications under SEPA. Nothing in this Agreement shall be construed to limit the authority or the obligation of the City to hold legally required public hearings, or to limit the discretion of the City or any of its officers or officials in complying with or applying Existing Land Use Regulations or other applicable law.

13. Existing Land Use Fees and Impact Fees. Land use fees, applicable impact fees, and any other applicable fees do not vest under this Agreement and shall be paid in full when due. The City may stay the review of any pending land use applications if any outstanding fees are due and owing.

14. **Multifamily Tax Exemption Program.** The City shall review and issue a decision pursuant to MTMC 3.95 and any other applicable law on any application submitted by Developer for a Multifamily Tax Exemption.

14. Minor Modifications. Minor modifications from the approved permits or the exhibits attached hereto may be approved in accordance with MTMC 18.05 and shall not require an amendment to this Agreement.

15. Default.

A. Subject to extensions of time by mutual consent in writing, the failure of either Party to timely perform any material provision of this Agreement shall constitute a default under this Agreement. In the event of such default, the Party alleging shall give the other Party not less than thirty (30) days' notice in writing specifying the nature of the alleged default and the manner in which said default may be cured. During this thirty (30) day period, the Party charged shall not be considered in default for purposes of termination or institution of legal proceedings.

B. After notice and expiration of the thirty (30) day period, the other Party to this Agreement may, at its option, institute legal proceedings or undertake any other available remedy.

16. Termination.

A. This Agreement shall expire and be of no further force and effect if Developer (a) fails to submit complete applications as reasonably determined by the City for the permits and approvals listed in Section 3A through 3F above not later than July 16, 2028 and Section 3G and 3H by July 16, 2029, or (b) Developer fails to make substantial construction progress as reasonably determined by the Director by July 16, 2031. Nothing in this Agreement shall extend the expiration date of any permit or approval issued by the City for any development or Project.

B. This Agreement shall expire and be of no further force and effect if the Developer does not construct the Project as contemplated by the permits and approvals identified in this Agreement, and/or if the Developer submits applications for development of the Property that are inconsistent with such permits and approvals.

C. This Agreement shall terminate upon the expiration of the term identified in Section 9 or when the Property has been fully developed, whichever first occurs. Upon termination of this Agreement, the City shall record a notice of such termination in a form satisfactory to the City Attorney that the Agreement has been terminated.

17. Effect upon Termination on Developer Obligations. Notwithstanding Section 16 above, termination of this Agreement as to the Developer of the Property or any portion thereof shall not affect any of the Developer's obligations to comply with the City Comprehensive Plan and the terms and conditions or any applicable zoning code(s), subdivision codes, approved Planned Action Ordinance, Binding Site Plan or other land use entitlements approved with respect to the Property, any other conditions of any other development specified in the Agreement to

continue after the termination of this Agreement, or obligations to pay assessments, liens, fees or taxes.

18. Effect upon Termination on City. Upon any termination of this Agreement as to the Developer of the Property or any portion thereof, the entitlements, conditions of development, limitations on fees and all other terms and conditions of this Agreement shall no longer be vested hereby with respect to the Property.

19. Assignment and Assumption. The Developer shall have the right to sell, assign or transfer this Agreement with all their rights, title and interests therein only after approval and consent by the City Council. The City Council's decision shall be based on a finding whether a proposed transferee has demonstrated the financial ability and development experience to perform Developer's obligations under this Agreement. The proposed assignee or transferee shall provide the City with all financial and other records the City deems necessary to make this determination. The City shall not unreasonably withhold, condition, or delay its decision.

20. Covenants Running with the Land. This Agreement shall be recorded against the Property, and the conditions and covenants set forth in this Agreement and otherwise incorporated herein by the Exhibits shall run with the land and the benefits and burdens shall bind and inure to the benefit of the Parties, their respective heirs, successors, legatees, representatives, receivers, trustees, transferees, and assigns. The Developer and every purchaser, assignee, or transferee of an interest in the Property, or any portion thereof, shall be obligated and bound by the terms and conditions of this Agreement, and shall be the beneficiary thereof and a Party thereto, but only with respect to the Property, or such portion thereof, sold, assigned or transferred to it. Any such purchaser, assignee or transferee shall observe and fully perform all of the duties and obligations of a Developer contained in this Agreement, as such duties and obligations pertain to the portion of the Property sold, assigned or transferred to it.

21. Entire Agreement. This Agreement together with the exhibits attached hereto constitutes the entire agreement between the Parties with respect to the subject matter hereof and supersedes all prior and contemporaneous agreements and understandings between the Parties relating to the subject matter hereof.

22. Amendment to Agreement; Effect of Agreement on Future Actions. This Agreement may be amended by mutual consent of the Parties, provided that any such amendment shall follow the process established by law for the initial adoption of a development agreement (see, RCW 36.70B.200) including the requirement for a public hearing. However, nothing in this Agreement shall prevent the City Council from making any amendment to its Comprehensive Plan, Zoning Code, Official Zoning Map or development regulations affecting the Property during the term of this Agreement, as the City Council may deem necessary to the extent required by a serious threat to public health and safety as authorized by law. Nothing in this Agreement shall prevent the City Council from making any amendments of any type to the Comprehensive Plan, Zoning Code, Official Zoning Map or development regulations relating to the Property after the expiration or termination of this Agreement.

23. City Reservation of Rights. Notwithstanding Section 10 herein, the City reserves

the authority under RCW 36.70B.170(4) to impose new or different regulations, to the extent required by a serious threat to public health and safety. In addition, the City reserves the right to impose new or different regulations to the extent required by Federal or State governments, which shall supersede the terms of the Development Agreement.

24. Notices. Notices, demands, correspondence to the City and Developer shall be sufficiently given if dispatched by pre-paid first-class mail to the following addresses:

If to the Developer:

Roger Collins
Whiskey 6, LLC
14800 NE North Woodinville Way
Woodinville, WA, 98072

If to the City:

Brooke Eidem,
Community Development Director
23204 58th Ave W.
Mountlake Terrace, WA 98043

The Parties hereto may, from time to time, advise the other of new addresses for such notices, demands or correspondence.

25. Reimbursement for Agreement Expenses of the City. Developer agrees to reimburse the City for actual expenses incurred over and above fees paid by Developer as an applicant incurred by City directly relating to this Agreement, including recording fees, publishing fees and reasonable staff, legal and consultant costs not otherwise included within application fees. Such payment of all fees shall be made, at the latest, within thirty (30) days from the City's presentation of a written statement of charges to the Developer. In the event Developer fails to pay the fees within the 30-day period, the City may declare the Developer in default and terminate this Agreement after 30 days written notice if the default is not timely cured. Initials: _____

26. Conflicts, Applicable Law, Venue, and Attorneys' Fees. This Agreement shall be construed and enforced in accordance with the laws of the State of Washington. If legal proceedings are initiated to enforce the terms of this Agreement, the prevailing Party shall be entitled to recover its reasonable attorneys' fees, costs, expenses, and disbursements (including the fees and expenses of expert and fact witnesses) reasonably incurred from the non-prevailing Party. Venue for any action shall be exclusively in Snohomish County Superior Court or the U.S. District Court for Western Washington.

Except as Developer's rights are vested under this Agreement, any conflicts between the provisions of City Code or ordinance and this Agreement shall be resolved by the applicable provision of City Code or ordinance.

27. Third Party Legal Challenge. In the event any legal action or special proceeding is commenced by any person or entity other than a Party to challenge this Agreement or any provision herein, the City may elect to tender the defense of such lawsuit or individual claims in the lawsuit to Developer. In such event, Developer shall hold the City harmless from and defend the City from all costs and expenses incurred in the defense of such lawsuit or individual claims in the lawsuit, including but not limited to, attorneys' fees and expenses of litigation, and damages awarded to the prevailing Party or Parties in such litigation. The Developer shall not settle any lawsuit without the consent of the City, which consent shall not be unreasonably withheld.

28. Waiver. The waiver by a Party of a breach of any provision of this Agreement by the other Party shall not operate or be construed as a waiver of any subsequent breech by that Party. No waiver shall be valid unless in writing and signed by the Party against whom enforcement of a waiver is sought.

29. Equal Opportunity to Participate in Drafting. The Parties have participated and had an equal opportunity to participate in the drafting of this Agreement. No ambiguity shall be construed against any Party based upon a claim that the Party drafted the ambiguous language.

30. Time is of the Essence. For the purposes of this Agreement and all transactions contemplated thereunder, time is of the essence.

31. Compliance with Laws and Ordinances. Throughout the term, and subject to the provisions of this Agreement, the Developer at its sole cost and expense shall promptly comply with all applicable laws and ordinances, as they relate to the Project.

32. Specific Performance. The Parties specifically agree that damages are not an adequate remedy at law for breach of this Agreement, and that the Parties are entitled to compel specific performance of all material terms of this Agreement by any Party in default hereof. All terms and provisions of this Agreement re material.

33. Severability. If any phrase, provision or section of this Agreement is determined by a court of competent jurisdiction to be invalid or unenforceable, or if any provision of this Agreement is rendered invalid or unenforceable according to the terms of any statute of the State of Washington which became effective after the effective date of the Adopting Ordinance, such invalidity shall not affect the validity of the remainder of this Agreement.

IN WITNESS WHEREOF, the Parties hereto have caused this Agreement to be executed as the dates set forth below:

WHISKEY 6, LLC:	**CITY OF MOUNTLAKE TERRACE:**
By: _____	By: _____
Name:	Name:
Title:	Title: City Manager
Date: _____	Date: _____

DRAFT

State of Washington }
} ***SS***.
County of _____ }

I certify that I know or have satisfactory evidence that _____ is the person who appeared before me, and said person acknowledged that (he/she) signed this instrument, on oath stated that (he/she) was authorized to execute the instrument and acknowledged it as the **Manager** of **Whiskey 6, LLC**, to be the free and voluntary act of such party for the uses and purposes mentioned in this instrument.

DATED: _____

_____

Name (typed or printed): _____
NOTARY PUBLIC in and for Washington Residing at ____
My appointment expires: _____

State of Washington }
} ***SS***.
County of Snohomish }

I certify that I know or have satisfactory evidence that _____ is the person who appeared before me, and said person acknowledged that (he/she) signed this instrument, on oath stated that (he/she) was authorized to execute the instrument and acknowledged it as the Manager of the **City of Mountlake Terrace**, to be the free and voluntary act of such party for the uses and purposes mentioned in this instrument.

DATED: _____

_____

Name (typed or printed): _____
NOTARY PUBLIC in and for Washington Residing at ____
My appointment expires: _____

DRAFT